Fidar Industrial
Group

Product Catalogue 2026

With metric and imperial units

Index

Products

	Page
Flow Preventing Valves	4
Check Valves	4
Check Valve Inserts	6
Pilot Actuated Check Valve	11
Pilot Actuated Dual Check Valve	13
Shuttle Valve	14
Shuttle Valve Inserts	15
Stack Mounting Check Valves	16
Stack Mounting Check Valves (pilot operated)	17
Directional Valves	18
Directional Spool Valves (hydraulic actuated)	18
Directional Spool Valves (pneumatic actuated)	21
Directional Spool Valves (manually actuated)	23
2-way / 2-position Directional Spool Valves (solenoid actuated)	24
3-way / 2-position Directional Spool Valves (solenoid actuated)	25
4-way / 2-position Directional Spool Valves (solenoid actuated)	27
4-way / 3-position Directional Spool Valves (solenoid actuated)	29
2-way / 2-position Directional Poppet Valves (free reverse flow, solenoid actuated)	30
2-way / 2-position Directional Seat Valves (double blocking, solenoid actuated)	34
2-way / 2-position Directional Seat Valves (manually operated)	38
2-way / 2-position Directional Seat Valves (with position monitoring)	40
3-way / 2-position Directional Seat Valves (solenoid actuated)	41
3-way / 2-position Directional Seat Valves (EEx-solenoid actuated)	42
3-way / 2-position Directional Seat Valves (manually operated)	43
3-way / 2-position Directional Seat Valves (pneumatic operation)	44
4-way / 2-position Directional Seat Valves (double locking)	45
Special Directional Valves	46
Logic Cartridge Valves (active or passive)	47
Manifold Mounting Directional Spool Valves (solenoid actuated)	48
Manifold Mounting Directional Spool Valves (EEx-solenoid actuated)	50
Manifold Mounting Directional Spool Valves (flow dependent auto-reversing)	51
Stack Mounting Directional Valves (solenoid actuated, direct acting)	52
Stack Mounting Directional Valves (EEx-solenoid actuated)	53
Stack Mounting Directional Valves (solenoid actuated, two-stage)	54

Flow Valves 56
Throttle Valves 56
Throttle Check Valves 57
Flow Control Valves 58
Flow Control Valves with separate drain (3-way) 60
Flow Divider/Combiner Valves 62
El. Proportional Throttle Valves 64
El. Proportional Throttle Valve Poppet Style 66
Stack Mounting Flow Regulator / Throttle Valve (manual adjuster) 67
Stack Mounting Throttle / Check Valve (manual adjuster) 68
Pressure Valves 69
Unloading Valves 69
Pressure Relief Valves 70
Pressure Reducing Valves 76
Pressure Sequence Valves 80
Pressure Compensators / Logic Elements 84
Rapid Traverse Pressure-Control Cartridge 86
Stack Mounting Pressure Relief Valves (manual adjuster) 87
Stack Mounting Pressure Relief Valves (solenoid actuated) 88
Stack Mounting Pressure Relief Valves (proportional) 89
Stack Mounting Pressure-Reducing Valves (manual adjuster) 90
Stack Mounting Pressure-Reducing Valves (solenoid actuated) 91
Stack Mounting Pressure-Reducing Valves (proportional) 92
Stack Mounting 3-Way Pressure-Reducing Valves (manual adjuster) 93
Stack Mounting 3-Way Pressure-Reducing Valves (proportional) 94
Stack Mounting Sequence Valves (manual actuating) 95
Stack Mounting Cross-Line Relief Valves (manual adjuster) 96
Stack Mounting Hydrostat Valves (manual adjuster) 97
Stack Mounting Counterbalance Valves (manual adjuster) 98
Safety Valves 99
Counter Balance Valves 99
Load Control Valves 101
Threaded Port Bodies 102
Threaded Port Bodies (2 Ports) 102
Threaded Port Bodies (3 Ports) 104
Threaded Port Bodies (4 Ports) 106

Products

Flow Preventing Valves

→ Index

Check Valves

Symbol	Picture	Nominal Size	Size (SAE)	Type Series	Qmax. [gpm]	Qmax. [l/min]	Flow Info	Pmax. [psi]	Pmax. [bar]	Pressure Info	Cavity	Threaded connection	Datasheet EN
		NG 05	SAE 08	CVPF-08	10	37	b)	3600	250	**)	C0820	3/4-16 UNF	520-P-010410-en
		NG 08	SAE 10	CVFP-10	18	68	b)	3600	250	**)	C1020	7/8-14 UNF	520-P-010120-en
		NG 10	SAE 12	CVFP-12	36	135	b)	3600	250	**)	C1220	1 1/16-12 UN	520-P-010130-en
		NG 12	SAE 16	CVFP-16	60	228	b)	3600	250	**)	C1620	1 5/16-12 UN	520-P-010140-en
		NG 05	SAE 08	CVRP-08	10	37	b)	3600	250	**)	C0820	3/4-16 UNF	520-P-010210-en
		NG 08	SAE 10	CVRP-10	18	68	b)	3600	250	**)	C1020	7/8-14 UNF	520-P-010220-en
		NG 10	SAE 12	CVRP-12	36	135	b)	3600	250	**)	C1220	1 1/16-12 UN	520-P-010230-en

Symbol	Picture	Nominal Size	Size (SAE)	Type Series	Qmax. [gpm]	Qmax. [l/min]	Flow Info	Pmax. [psi]	Pmax. [bar]	Pressure Info	Cavity	Threaded connection	Datasheet EN
		NG 12	SAE 16	CVRP-16	50	185	b)	3600	250	**)	C1620	1 5/16-12 UN	520-P-010240-en
		NG 03	SAE 04	CVFB-04	2.5	9.4	b)	3600	250	**)	C0820	3/4-16 UNF	520-P-010300-en
		NG 05	SAE 08	CVFB-08	10	37	b)	3600	250	**)	C0820	3/4-16 UNF	520-P-010310-en
		NG 08	SAE 10	CVFB-10	18	68	b)	3600	250	**)	C1020	7/8-14 UNF	520-P-010320-en
		NG 10	SAE 10	RVPA-10	31	120		5000	350	*)	DC	M24 X 1.5	400-P-455101-en
		NG 16	SAE 16	RVP 16	42	160	d)	7100	500	*)	see Data sheet	M30 X 1.5	300-P-9050063-en
		NG 22	SAE 22	RVP 22	66	250	d)	7100	500	*)	see Data sheet	M42 X 1.5	300-P-9050091-en

Check Valve Inserts

→ Index

Symbol	Picture	Nominal Size	Size (SAE)	Type Series	Qmax. [gpm]	Qmax. [l/min]	Flow Info	Pmax. [psi]	Pmax. [bar]	Pressure Info	Cavity	Threaded connection	Datasheet EN
		NG 04		RKVE-G-04-02-KB	4	15	d)	5000	350	*)	see Data sheet	G 1/8"	170-P-051601-en
		NG 06		RKVE-G-06-02-KB	8	30	d)	5000	350	*)	see Data sheet	G 1/4"	170-P-051602-en
		NG 08		RKVE-G-08-02-KB	13	50	d)	5000	350	*)	see Data sheet	G 3/8"	170-P-051603-en
		NG 10		RKVE-G-10-02-KB	26	100	d)	5000	350	*)	see Data sheet	G 1/2"	170-P-051604-en
		NG 16		RKVE-16-02-KB	53	200	d)	5000	350	*)	see Data sheet	G 3/4"	170-P-051605-en
		NG 03		RKVE-M-03	2	8	d)	5000	350	*)	see Data sheet	M 8x0.75	170-P-060109-en
		NG 04		RKVE-G-04-__-VD	6.5	25	d)	5000	350	*)	see Data sheet	G 1/8"	170-P-051301-en
		NG 06		RKVE-G-06-__-VD	13	50	d)	5000	350	*)	see Data sheet	G 1/4"	170-P-051302-en
		NG 08		RKVE-G-08-__-VD	21	80	d)	5000	350	*)	see Data sheet	G 3/8"	170-P-051303-en

Symbol	Picture	Nominal Size	Size (SAE)	Type Series	Qmax. [gpm]	Qmax. [l/min]	Flow Info	Pmax. [psi]	Pmax. [bar]	Pressure Info	Cavity	Threaded connection	Datasheet EN
		NG 10		RKVE-G-10-__-VD	31	120	d)	5000	350	*)	see Data sheet	G 1/2"	170-P-051304-en
		NG 16		RKVE-G-16-__-VD	79	300	d)	5000	350	*)	see Data sheet	G 3/4"	170-P-051305-en
		NG 25		RKVE-G-25-__-VD	105	400	d)	5000	350	*)	see Data sheet	G 1"	170-P-051306-en
		NG 32		RKVE-G-32-__-VD	105	400	d)	5000	350	*)	see Data sheet	G 1 1/4"	170-P-051307-en
		NG 40		RKVE-G-40-__-VD	140	540	d)	5000	350	*)	see Data sheet	G 1 1/2"	170-P-051308-en
		NG 04		RKVE-G-04-__-VD22	6.5	25	d)	3200	220	*)	see Data sheet	G 1/8"	170-P-051351-en
		NG 06		RKVE-G-06-__-VD22	13	50	d)	3200	220	*)	see Data sheet	G 1/4"	170-P-051352-en
		NG 08		RKVE-G-08-__-VD22	21	80	d)	3200	220	*)	see Data sheet	G 3/8"	170-P-051353-en
		NG 10		RKVE-G-10-__-VD22	37	140	d)	3200	220	*)	see Data sheet	G 1/2"	170-P-051354-en

Symbol	Picture	Nominal Size	Size (SAE)	Type Series	Qmax. [gpm]	Qmax. [l/min]	Flow Info	Pmax. [psi]	Pmax. [bar]	Pressure Info	Cavity	Threaded connection	Datasheet EN
		NG 04		RVVE-G-04-...	3.25	12	d)	5000	350	*)	see Data sheet	G 1/8"	170-P-051011-en
		NG 06		RVVE-G-06-...	6	22	d)	5000	350	*)	see Data sheet	G 1/4"	170-P-051012-en
		NG 08		RVVE-G-08-...	9.25	35	d)	5000	350	*)	see Data sheet	G 3/8"	170-P-051013-en
		NG 10		RVVE-G-10-...	16	60	d)	5000	350	*)	see Data sheet	G 1/2"	170-P-051014-en
		NG 16		RVVE-G-16-...	29	110	d)	5000	350	*)	see Data sheet	G 3/4"	170-P-051015-en
		NG 25		RVVE-G-25-...	53	200	d)	5000	350	*)	see Data sheet	G 1"	170-P-051016-en
		NG 32		RVVE-G-32-...	105	400	d)	5000	350	*)	see Data sheet	G 1 1/4"	170-P-051017-en
		NG 40		RVVE-G-40-...	105	400	d)	5000	350	*)	see Data sheet	G 1 1/2"	170-P-051018-en
		NG 03		RKVG-M-03-...	2	8	b)	5000	350	**)	see Data sheet	M 8x0.75	170-P-060108-en

Symbol	Picture	Nominal Size	Size (SAE)	Type Series	Qmax. [gpm]	Qmax. [l/min]	Flow Info	Pmax. [psi]	Pmax. [bar]	Pressure Info	Cavity	Threaded connection	Datasheet EN
		NG 04		RKVG-G-04-...	4	15	b)	5000	350	**)	see Data sheet	G 1/8"	170-P-051101-en
		NG 06		RKVG-G-06-...	8	30	b)	5000	350	**)	see Data sheet	G 1/4"	170-P-051102-en
		NG 08		RKVG-G-08-...	13	50	b)	5000	350	**)	see Data sheet	G 3/8"	
		NG 10		RKVG-G-10-...	24	90	b)	5000	350	**)	see Data sheet	G 1/2"	
		NG 10		RKVG-G-16-...	24	90	b)	5000	350	**)	see Data sheet	G 3/4"	
		NG 04		RKVG-G-04-02-KB	4	15	b)	5000	350	**)	see Data sheet	G 1/8"	170-P-051651-en
		NG 06		RKVG-G-06-02-KB	8	30	b)	5000	350	**)	see Data sheet	G 1/4"	170-P-051652-en
		NG 08		RKVG-G-08-02-KB	13	50	b)	5000	350	**)	see Data sheet	G 3/8"	170-P-051653-en
		NG 10		RKVG-G-10-02-KB	24	90	b)	5000	350	**)	see Data sheet	G 1/2"	170-P-051654-en

Symbol	Picture	Nominal Size	Size (SAE)	Type Series	Qmax. [gpm]	Qmax. [l/min]	Flow Info	Pmax. [psi]	Pmax. [bar]	Pressure Info	Cavity	Threaded connection	Datasheet EN
		NG 16		RKVG-G-16-02-KB	45	170	b)	5000	350	**)	see Data sheet	G 1"	170-P-051655-en
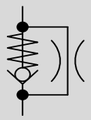		NG 04		RVE-G-04-...	4	15	d)	5000	350	*)	see Data sheet	G 1/8"	170-P-050001-en
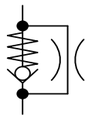		NG 06		RVE-G-06-...	9.25	35	d)	5000	350	*)	see Data sheet	G 1/4"	170-P-050002-en
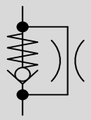		NG 08		RVE-G-08-...	16	60	d)	5000	350	*)	see Data sheet	G 3/8"	170-P-050003-en
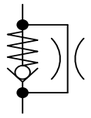		NG 10		RVE-G-10-...	24	90	d)	5000	350	*)	see Data sheet	G 1/2"	170-P-050004-en
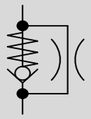		NG 16		RVE-G-16-...	45	170	d)	5000	350	*)	see Data sheet	G 3/4"	170-P-050005-en
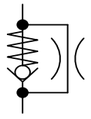		NG 25		RVE-G-25-...	45	170	d)	5000	350	*)	see Data sheet	G 1"	170-P-050006-en

Pilot Actuated Check Valve

→ Index

Symbol	Picture	Nominal Size	Size (SAE)	Type Series	Qmax. [gpm]	Qmax. [l/min]	Flow Info	Pmax. [psi]	Pmax. [bar]	Pressure Info	Cavity	Threaded connection	Datasheet EN
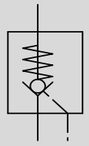		NG 05	SAE 08	POCI-08	10	37	b)	3600	250	**)	C0825	3/4-16 UNF	520-P-011010-en
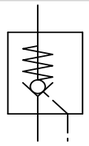		NG 08	SAE 10	POCI-10	18	68	b)	3600	250	**)	C1025	7/8-14 UNF	520-P-011020-en
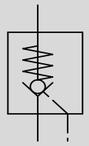		NG 10	SAE 12	POCI-12	35	132.5	b)	3600	250	**)	C1225	1 1/16-12 UN	520-P-011030-en
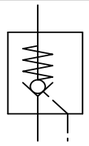		NG 05	SAE 08	POCX-08	10	37	b)	3600	250	**)	C0820	3/4-16 UNF	520-P-011110-en
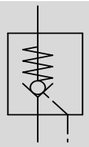		NG 08	SAE 10	POCX-10	18	68	b)	3600	250	**)	C1020	7/8-14 UNF	520-P-011120-en
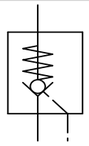		NG 10	SAE 12	POCX-12	35	132.5	b)	3600	250	**)	C1220	1 1/16-12 UN	520-P-011130-en
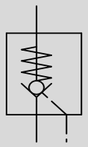		NG 01		ERVH-G-1-...	3.25	12	d)	5000	350	*)	see Data sheet	G 1/4"	170-P-052001-en
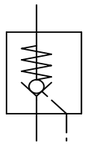		NG 02		ERVH-G-2-...	6.5	25	d)	5000	350	*)	see Data sheet	G 3/8"	170-P-052002-en
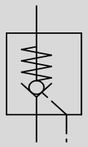		NG 04		ERVH-G-4-...	20	75	d)	5000	350	*)	see Data sheet	G 3/4"	170-P-052004-en

Symbol	Picture	Nominal Size	Size (SAE)	Type Series	Qmax. [gpm]	Qmax. [l/min]	Flow Info	Pmax. [psi]	Pmax. [bar]	Pressure Info	Cavity	Threaded connection	Datasheet EN
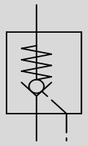		NG 08	SAE 8	ERV 8	21	80	d)	6500	450	*)	see Data sheet	M30 X 1.5	300-P-9050014-en
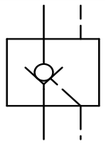		NG 10	SAE 10	REPB-10	31	120	c)	5000	350	*)	RC	M32 X 1.5	400-P-456101-en
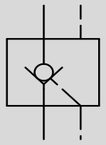		NG 16	SAE 16	REPNB-16	79	300	c)	5000	350	*)	EC	M42 X 2	400-P-457101-en
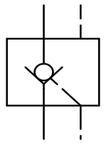		NG 10	SAE 10	REPYB-10	31	120	c)	5000	350	*)	RCY	M32 X 1.5	400-P-456501-en
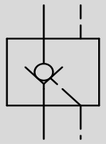		NG 16	SAE 16	REPYB-16	79	300	c)	5000	350	*)	ECY	M42 X 2	400-P-457102-en
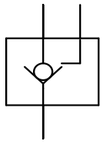	X	NG 08	SAE 10	PTCC-10	10	37	b)	3600	250	**)	C1025	1 1/16-12 UN	520-P-012020-en

Pilot Actuated Dual Check Valve

→ Index

Symbol	Picture	Nominal Size	Size (SAE)	Type Series	Qmax. [gpm]	Qmax. [l/min]	Flow Info	Pmax. [psi]	Pmax. [bar]	Pressure Info	Cavity	Threaded connection	Datasheet EN
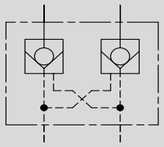		NG 05	SAE 08	PDCV-08	5	18	b)	3600	250	**)	C0840	3/4-16 UNF	520-P-011510-en
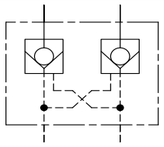		NG 08	SAE 10	PDCV-10	10	37	b)	3600	250	**)	C1040	7/8-14 UNF	520-P-011520-en
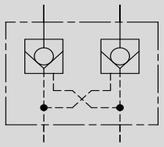		NG 08	SAE 10	POCD-10	10	37	b)	3600	250	**)	C1040	7/8-14 UNF	520-P-011320-en
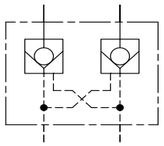	X	NG 05	SAE 08	DPOC-08	10	37	b)	3600	250	**)	C0840	3/4-16 UNF	520-P-011410-en
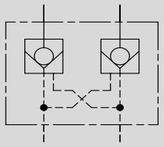	X	NG 08	SAE 10	DPOC-10	18	68	b)	3600	250	**)	C1040	7/8-14 UNF	520-P-011420-en
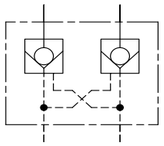	X	NG 10	SAE 12	DPOC-12	36	135	b)	3600	250	**)	C1240	1 1/16-12 UN	520-P-011430-en
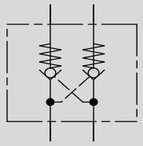		NG 10	SAE 10	DERV 10	26	100	d)	5000 (load: 7000)	350 (load: 500)	*)	see Data sheet	M40 X 1.5	300-P-9050112-en
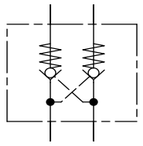		NG 08	SAE 8	DERV 8	18	70	d)	5000 (load: 7000)	350 (load: 500)	*)	see Data sheet	M30 X 1.5	300-P-9050061-en

Shuttle Valve

→ Index

Symbol	Picture	Nominal Size	Size (SAE)	Type Series	Qmax. [gpm]	Qmax. [l/min]	Flow Info	Pmax. [psi]	Pmax. [bar]	Pressure Info	Cavity	Threaded connection	Datasheet EN
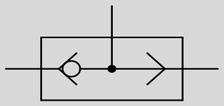		NG 03	SAE 04	BDSV-04-X-3	1.5	5.6	b)	5000	350	**)	C0430	7/16-20 UNF	520-P-040200-en
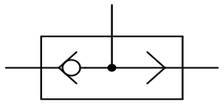		NG 05	SAE 08	BDSV-08-X-3	3	11	b)	5000	350	**)	C0830	3/4-16 UNF	520-P-040210-en
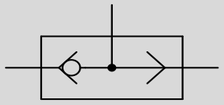	X	NG 08	SAE 10	BDSV-10-X-2	6	22	b)	5000	350	**)	C1020	7/8-14 UNF	520-P-040120-en
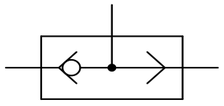		NG 05	SAE 10	BDSV-10-X-3	6	22	b)	5000	350	**)	C1030	7/8-14 UNF	520-P-040220-en

Shuttle Valve Inserts

→ Index

Symbol	Picture	Nominal Size	Size (SAE)	Type Series	Qmax. [gpm]	Qmax. [l/min]	Flow Info	Pmax. [psi]	Pmax. [bar]	Pressure Info	Cavity	Threaded connection	Datasheet EN
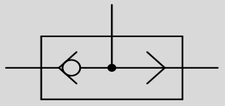		NG 02		RWA	2	8	c)	3600	250	*)	AE	G 1/8"	400-P-470101-en
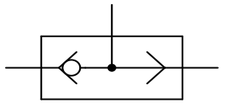		NG 02		RWZ	2	8	c)	3600	250	*)	AEZ	G 1/8"	400-P-470501-en
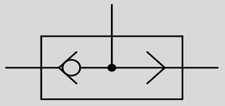		NG 04		WRVC-G-04-...	3.25	12	c)	5000	350	*)	see Data sheet	G 1/8"	170-P-053001-en
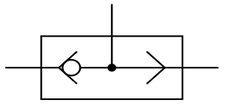		NG 06		WRVC-G-06-...	6	22	c)	5000	350	*)	see Data sheet	G 1/4"	170-P-053002-en
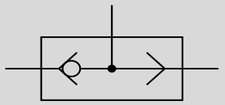		NG 08		WRVC-G-08-...	12	45	c)	5000	350	*)	see Data sheet	G 3/8"	170-P-053003-en
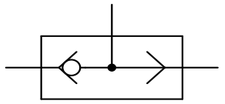		NG 10		WRVC-G-10-...	20	75	c)	5000	350	*)	see Data sheet	G 1/2"	170-P-053004-en

Stack Mounting Check Valves

→ Index

Symbol	Picture	Nominal Size	Size (SAE)	Type Series	Qmax. [gpm]	Qmax. [l/min]	Flow Info	Pmax. [psi]	Pmax. [bar]	Pressure Info	Cavity	Threaded connection	Datasheet EN
		NG 06	SAE 6	SRV-6	15	60	c)	5000	350	*)	ISO 4401-03-02	M5	400-P-466501-en
		NG 10	SAE 10	SRV-10	31	120	c)	5000	350	*)	ISO 4401-05-04	M6	400-P-467501-en

Stack Mounting Check Valves (pilot operated)

→ Index

Symbol	Picture	Nominal Size	Size (SAE)	Type Series	Qmax. [gpm]	Qmax. [l/min]	Flow Info	Pmax. [psi]	Pmax. [bar]	Pressure Info	Cavity	Threaded connection	Datasheet EN
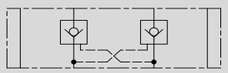	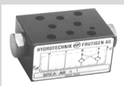	NG 04	SAE 4	SRE-4	6.5	25	c)	3600	250	*)	ISO 4401-02-01	M5	400-P-465101-en
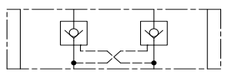		NG 06	SAE 6	SRE-6	15	60	c)	5000	350	*)	ISO 4401-03-02	M5	400-P-466101-en
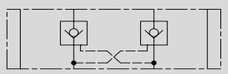		NG 10	SAE 10	SRE-10	31	120	c)	5000	350	*)	ISO 4401-05-04	M6	400-P-467101-en
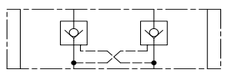		NG 16	SAE 16	SRE-16	79	300	c)	5000	350	*)	ISO 4401-07-07	M10	400-P-468101-en

Directional Valves

Directional Spool Valves (hydraulic actuated)

→ Index

Symbol	Picture	Nominal Size	Size (SAE)	Type Series	Qmax. [gpm]	Qmax. [l/min]	Flow Info	Pmax. [psi]	Pmax. [bar]	Pressure Info	Cavity	Threaded connection	Datasheet EN
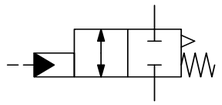	X	NG 08	SAE 10	DCPV-10_C	10	37	b)	5000	350	**)	C1030	7/8-14 UNF	520-P-091820-en
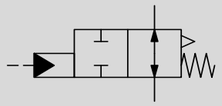	X	NG 08	SAE 10	DCPV-10_O	10	37	b)	5000	350	**)	C1030	7/8-14 UNF	520-P-091920-en
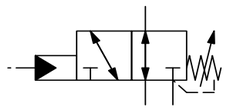		NG 08	SAE 10	DCPS-10_A	12	45	b)	5000	350	**)	C1040	7/8-14 UNF	520-P-090120-en
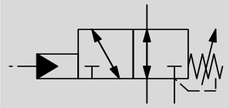		NG 08	SAE 10	DCPS-10_B	12	45	b)	5000	350	**)	C1040	7/8-14 UNF	520-P-090220-en
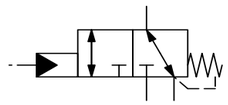		NG 08	SAE 10	DCPS-10_C	12	45	b)	5000	350	**)	C1040	7/8-14 UNF	520-P-090320-en
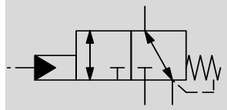		NG 08	SAE 10	DCPS-10_D	12	45	b)	5000	350	**)	C1040	7/8-14 UNF	520-P-090420-en
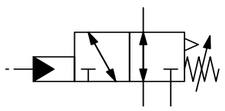		NG 08	SAE 10	DCPS-10_E	12	45	b)	5000	350	**)	C1040	7/8-14 UNF	520-P-091120-en
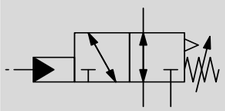		NG 08	SAE 10	DCPS-10_F	12	45	b)	5000	350	**)	C1040	7/8-14 UNF	520-P-091220-en

Symbol	Picture	Nominal Size	Size (SAE)	Type Series	Qmax. [gpm]	Qmax. [l/min]	Flow Info	Pmax. [psi]	Pmax. [bar]	Pressure Info	Cavity	Threaded connection	Datasheet EN
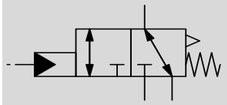		NG 08	SAE 10	DCPS-10_G	12	45	b)	5000	350	**)	C1040	7/8-14 UNF	520-P-091320-en
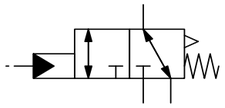		NG 08	SAE 10	DCPS-10_H	12	45	b)	5000	350	**)	C1040	7/8-14 UNF	520-P-091420-en
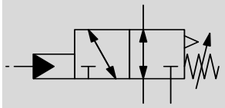	X	NG 10	SAE 12	DCPS-12_F	24	90	b)	5000	350	**)	C1240	1 1/16-12 UN	520-P-091230-en
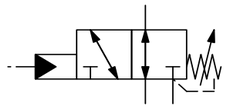		NG 08	SAE 10	DCPS-16_A	36	135	b)	5000	350	**)	C1640	1 5/16-12 UN	520-P-090140-en
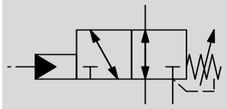		NG 12	SAE 16	DCPS-16_B	36	135	b)	5000	350	**)	C1640	1 5/16-12 UN	520-P-090240-en
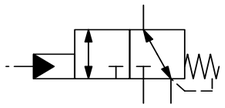		NG 12	SAE 16	DCPS-16_C	36	135	b)	5000	350	**)	C1640	1 5/16-12 UN	520-P-090340-en
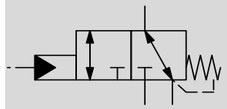		NG 12	SAE 16	DCPS-16_D	36	135	b)	5000	350	**)	C1640	1 5/16-12 UN	520-P-090440-en
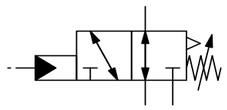		NG 12	SAE 16	DCPS-16_E	36	135	b)	5000	350	**)	C1640	1 5/16-12 UN	520-P-091140-en
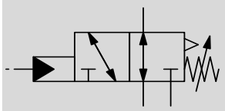		NG 12	SAE 16	DCPS-16_F	36	135	b)	5000	350	**)	C1640	1 5/16-12 UN	520-P-091240-en

Symbol	Picture	Nominal Size	Size (SAE)	Type Series	Qmax. [gpm]	Qmax. [l/min]	Flow Info	Pmax. [psi]	Pmax. [bar]	Pressure Info	Cavity	Threaded connection	Datasheet EN
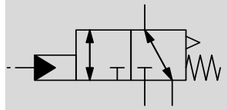		NG 12	SAE 16	DCPS-16_G	36	135	b)	5000	350	**)	C1640	1 5/16-12 UN	520-P-091340-en
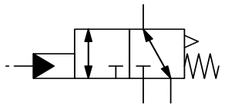		NG 12	SAE 16	DCPS-16_H	36	135	b)	5000	350	**)	C1640	1 5/16-12 UN	520-P-091440-en

Directional Spool Valves (pneumatic actuated)

→ Index

Symbol	Picture	Nominal Size	Size (SAE)	Type Series	Qmax. [gpm]	Qmax. [l/min]	Flow Info	Pmax. [psi]	Pmax. [bar]	Pressure Info	Cavity	Threaded connection	Datasheet EN
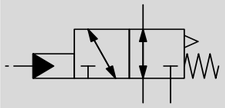		NG 08	SAE 10	AODV-10_3A	8	30	b)	5000	350	**)	C1030	7/8-14 UNF	520-P-093020-en
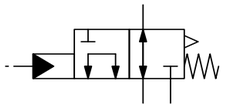		NG 08	SAE 10	AODV-10_3B	8	30	b)	5000	350	**)	C1030	7/8-14 UNF	520-P-093120-en
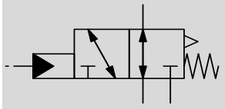		NG 08	SAE 10	AODV-10_3C	8	30	b)	5000	350	**)	C1030	7/8-14 UNF	520-P-093220-en
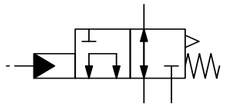		NG 08	SAE 10	AODV-10_3D	8	30	b)	5000	350	**)	C1030	7/8-14 UNF	520-P-093320-en
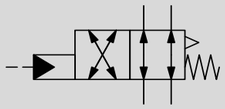		NG 08	SAE 10	AODV-10_4A	8	30	b)	5000	350	**)	C1040	7/8-14 UNF	520-P-093520-en
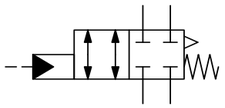		NG 08	SAE 10	AODV-10_4B	8	30	b)	5000	350	**)	C1040	7/8-14 UNF	520-P-093620-en
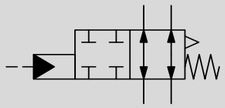		NG 08	SAE 10	AODV-10_4C	8	30	b)	5000	350	**)	C1040	7/8-14 UNF	520-P-093720-en
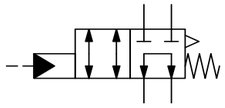		NG 08	SAE 10	AODV-10_4D	8	30	b)	5000	350	**)	C1040	7/8-14 UNF	520-P-093820-en
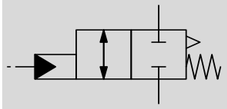		NG 08	SAE 10	AODV-10_C1	8	30	b)	5000	350	**)	C1020	7/8-14 UNF	520-P-092120-en

Symbol	Picture	Nominal Size	Size (SAE)	Type Series	Qmax. [gpm]	Qmax. [l/min]	Flow Info	Pmax. [psi]	Pmax. [bar]	Pressure Info	Cavity	Threaded connection	Datasheet EN
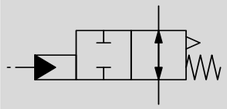	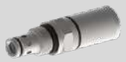	NG 08	SAE 10	AODV-10_O1	8	30	b)	5000	350	**)	C1020	7/8-14 UNF	520-P-092520-en
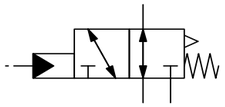		NG 10	SAE 12	AODV-12_3A	16	60	b)	5000	350	**)	C1230	1 1/16-12 UN	520-P-093030-en
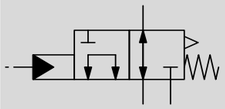		NG 10	SAE 12	AODV-12_3B	16	60	b)	5000	350	**)	C1230	1 1/16-12 UN	520-P-093130-en
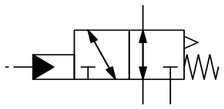		NG 10	SAE 12	AODV-12_3C	16	60	b)	5000	350	**)	C1230	1 1/16-12 UN	520-P-093230-en
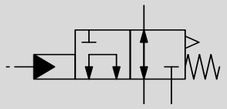		NG 10	SAE 12	AODV-12_3D	16	60	b)	5000	350	**)	C1230	1 1/16-12 UN	520-P-093330-en
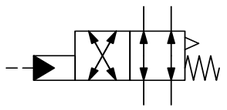		NG 10	SAE 12	AODV-12_4A	16	60	b)	5000	350	**)	C1240	1 1/16-12 UN	520-P-093530-en
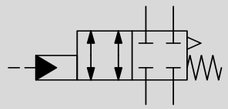		NG 10	SAE 12	AODV-12_4B	16	60	b)	5000	350	**)	C1240	1 1/16-12 UN	520-P-093630-en
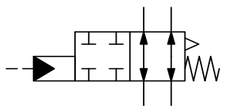		NG 10	SAE 12	AODV-12_4C	16	60	b)	5000	350	**)	C1240	1 1/16-12 UN	520-P-093730-en
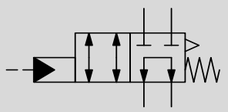		NG 10	SAE 12	AODV-12_4D	16	60	b)	5000	350	**)	C1240	1 1/16-12 UN	520-P-093830-en

Directional Spool Valves (manually actuated)

→ Index

Symbol	Picture	Nominal Size	Size (SAE)	Type Series	Qmax. [gpm]	Qmax. [l/min]	Flow Info	Pmax. [psi]	Pmax. [bar]	Pressure Info	Cavity	Threaded connection	Datasheet EN
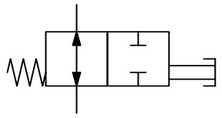	X	NG 08	SAE 10	MPTC-10-O	6	22	b)	5000	350	**)	C1020	7/8-14 UNF	520-P-120320-en

2-way / 2-position Directional Spool Valves (solenoid actuated)

→ Index

Symbol	Picture	Nominal Size	Size (SAE)	Type Series	Qmax. [gpm]	Qmax. [l/min]	Flow Info	Pmax. [psi]	Pmax. [bar]	Pressure Info	Cavity	Threaded connection	Datasheet EN
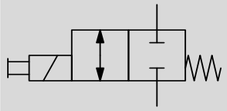		NG 05		WK22G_A5...	7.5	30	c)	3600	250	*)	AL	3/4-16 UNF	400-P-121160-en
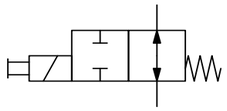		NG 05		WK22O_A5...	7.5	30	c)	3600	250	*)	AL	3/4-16 UNF	400-P-121161-en

3-way / 2-position Directional Spool Valves (solenoid actuated)

→ Index

Symbol	Picture	Nominal Size	Size (SAE)	Type Series	Qmax. [gpm]	Qmax. [l/min]	Flow Info	Pmax. [psi]	Pmax. [bar]	Pressure Info	Cavity	Threaded connection	Datasheet EN
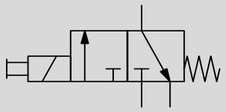		NG 01		WKP32GLA1...	1.25	5	c)	6000	420	*)	AM	3/4-16 UNF	400-P-120621-en
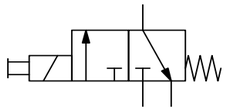		NG 03		WKP32GNA3...	3.75	15	c)	6000	420	*)	AM	3/4-16 UNF	400-P-120821-en
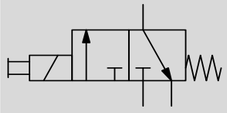		NG 05		WK32G_A5...	7.5	30	c)	3600	250	*)	AM	3/4-16 UNF	400-P-121180-en
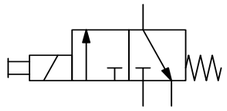		NG 08	SAE 10	WKDP32G-8U-...	10	40	c)	5000	350	*)	AU/C1030	7/8-14 UNF	400-P-120920-en
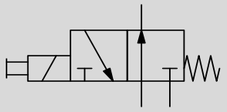		NG 01		WKP32OLA1...	1.25	5	c)	6000	420	*)	AM	3/4-16 UNF	400-P-120622-en
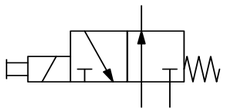		NG 03		WKP32ONA3...	3.75	15	c)	6000	420	*)	AM	3/4-16 UNF	400-P-120822-en
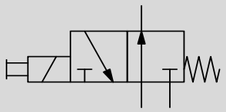		NG 05		WK32O_A5...	7.5	30	c)	3600	250	*)	AM	3/4-16 UNF	400-P-121181-en
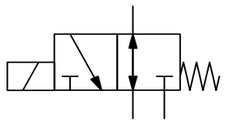		NG 08	SAE 10	WKDP32O-8U-...	10	40	c)	5000	350	*)	AU/C1030	7/8-14 UNF	400-P-120921-en
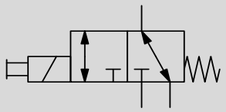	X	NG 08	SAE 10	EMDV-10-3B	7.5	30	b)	5000	350	**)	C1030	7/8-14 UNF	520-P-101120-en

Symbol	Picture	Nominal Size	Size (SAE)	Type Series	Qmax. [gpm]	Qmax. [l/min]	Flow Info	Pmax. [psi]	Pmax. [bar]	Pressure Info	Cavity	Threaded connection	Datasheet EN
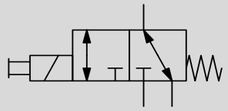		NG 10	SAE 12	ESDV-12-3A	16	60	b)	5000	350	**)	C1230	1 1/16-12 UN	520-P-106030-en
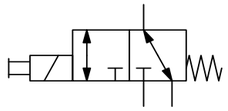		NG 10	SAE 12	ESDV-12-3C	16	60	b)	5000	350	**)	C1230	1 1/16-12 UN	520-P-106030-en
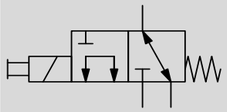		NG 10	SAE 12	ESDV-12-3B	16	60	b)	5000	350	**)	C1230	1 1/16-12 UN	520-P-106030-en
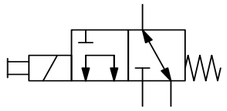		NG 10	SAE 12	ESDV-12-3D	16	60	b)	5000	350	**)	C1230	1 1/16-12 UN	520-P-106030-en

4-way / 2-position Directional Spool Valves (solenoid actuated)

→ Index

Symbol	Picture	Nominal Size	Size (SAE)	Type Series	Qmax. [gpm]	Qmax. [l/min]	Flow Info	Pmax. [psi]	Pmax. [bar]	Pressure Info	Cavity	Threaded connection	Datasheet EN
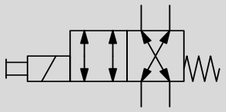	X	NG 08	SAE 10	EMDV-08-4J	4.75	18	b)	5000	350	**)	C0840	3/4-16 UNF	520-P-102510-en
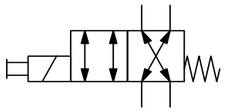		NG 10	SAE 12	ESDV-12-4A	16	60	b)	5000	350	**)	C1240	1 1/16-12 UN	520-P-107030-en
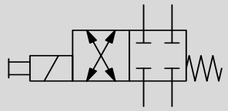		NG 10	SAE 12	ESDV-12-4B	16	60	b)	5000	350	**)	C1240	1 1/16-12 UN	520-P-107050-en
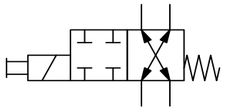		NG 10	SAE 12	ESDV-12-4C	16	60	b)	5000	350	**)	C1240	1 1/16-12 UN	520-P-107060-en
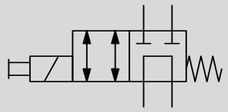		NG 10	SAE 12	ESDV-12-4D	16	60	b)	5000	350	**)	C1240	1 1/16-12 UN	520-P-107070-en
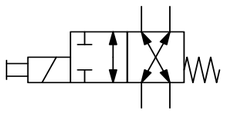		NG 10	SAE 12	ESDV-12-4E	16	60	b)	5000	350	**)	C1240	1 1/16-12 UN	520-P-107080-en
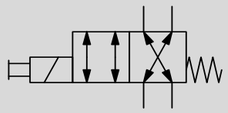		NG 10	SAE 12	ESDV-12-4F	16	60	b)	5000	350	**)	C1240	1 1/16-12 UN	520-P-107031-en
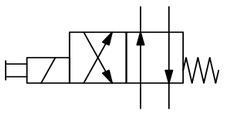		NG 05		WK42A_A5...	6.5	25	c)	3600	250	*)	AN	3/4-16 UNF	400-P-121220-en
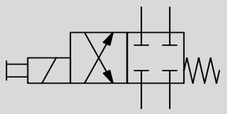		NG 05		WK42AD_A5...	8	30	c)	3600	250	*)	AN	3/4-16 UNF	400-P-121221-en

Symbol	Picture	Nominal Size	Size (SAE)	Type Series	Qmax. [gpm]	Qmax. [l/min]	Flow Info	Pmax. [psi]	Pmax. [bar]	Pressure Info	Cavity	Threaded connection	Datasheet EN
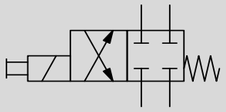		NG 08	SAE 10	WKDP42AD-8T...	11	40	c)	5000	350	*)	AT/C1040	7/8-14 UNF	400-P-120965-en
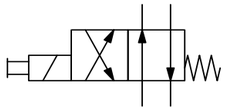		NG 01		WKP42ALA1...	1.25	5	c)	6000	420	*)	AN	3/4-16 UNF	400-P-120641-en
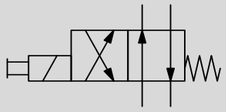		NG 03		WKP42ANA3...	3.75	15	c)	6000	420	*)	AN	3/4-16 UNF	400-P-120841-en
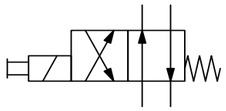		NG 08	SAE 10	WKDP42A-8T...	11	40	c)	5000	350	*)	AT/C1040	7/8-14 UNF	400-P-120960-en

4-way / 3-position Directional Spool Valves (solenoid actuated)

→ Index

Symbol	Picture	Nominal Size	Size (SAE)	Type Series	Qmax. [gpm]	Qmax. [l/min]	Flow Info	Pmax. [psi]	Pmax. [bar]	Pressure Info	Cavity	Threaded connection	Datasheet EN
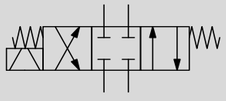	X	NG 05	SAE 08	EMBV-08-4L	4.75	18	c)	5000	350	*)	C0840	3/4-16 UNF	400-P-104410-en
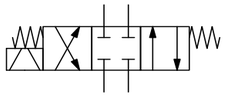		NG 05		WK43D_A5...	7.5	30	c)	3600	250	*)	AN	3/4-16 UNF	400-P-121240-en
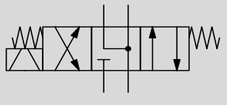		NG 05		WK43G_A5...	5.5	22	c)	3600	250	*)	AN	3/4-16 UNF	400-P-121241-en
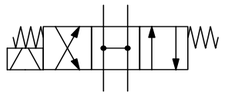	X	NG 05	SAE 08	EMBV-08-4K	4.75	18	c)	5000	350	*)	C0840	3/4-16 UNF	520-P-104310-en

2-way / 2-position Directional Poppet Valves (free reverse flow, solenoid actuated)

→ Index

Symbol	Picture	Nominal Size	Size (SAE)	Type Series	Qmax. [gpm]	Qmax. [l/min]	Flow Info	Pmax. [psi]	Pmax. [bar]	Pressure Info	Cavity	Threaded connection	Datasheet EN
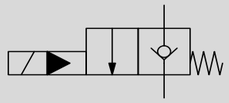		NG 05		WR22L_A5-...	10	40	c)	5000	350	*)	AL	3/4-16 UNF	400-P-121142-en
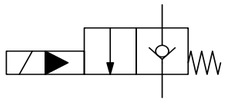		NG 05		WR22L_Z5...	10	40	c)	5000	350	*)	ALM	M20 X1.5	400-P-121143-en
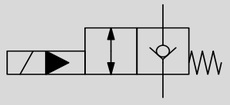		NG 05		WR22G_A5-...	10	40	c)	5000	350	*)	AL	3/4-16 UNF	400-P-121120-en
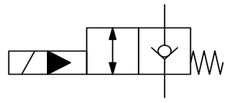		NG 05		WRP22GEA5...	10	40	c)	6000	420	*)	AL	3/4-16 UNF	400-P-121121-en
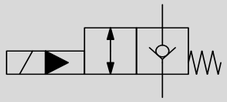		NG 05		WR22G_Z5-...	10	40	c)	5000	350	*)	ALM	M20 X1.5	400-P-121123-en
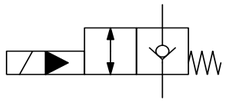		NG 08	SAE 10	WRVP22G-8X	21	80	c)	5000	350	*)	AX/C1020	7/8-14 UNF	400-P-122120-en
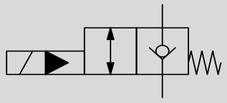		NG 10		WR22G_CA-10...	36	140	c)	5000	350	*)	DC	M24 X 1.5	400-P-131110-en
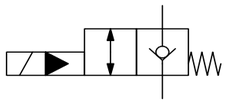		NG 10		WR22G_DA-10...	36	140	c)	5000	350	*)	DD	M24 X 1.5	400-P-131111-en
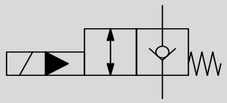		NG 05	SAE 08	WRVE22G-5H-_-A...	10	40	c)	5000	350	*)	BH/C0820	3/4-16 UNF	400-P-121150-en

Symbol	Picture	Nominal Size	Size (SAE)	Type Series	Qmax. [gpm]	Qmax. [l/min]	Flow Info	Pmax. [psi]	Pmax. [bar]	Pressure Info	Cavity	Threaded connection	Datasheet EN
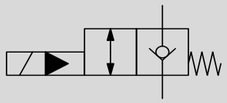		NG 05	SAE 08	WRVE22L-5H-_-A...	10	40	c)	5000	350	*)	BH/C0820	3/4-16 UNF	400-P-121156-en
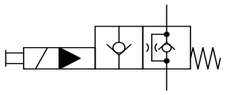		NG 05	SAE 08	WRVE22K-5H-_-A...	10	40	c)	5000	350	*)	BH/C0820	3/4-16 UNF	400-P-121155-en
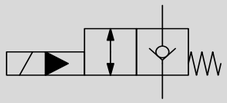		NG 05	SAE 08	WRVE22O-5H-_-A...	10	40	c)	5000	350	*)	BH/C0820	3/4-16 UNF	400-P-121151-en
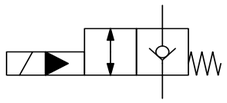		NG 10	SAE 12	WRV_22G-10F-_A...	36	140	c)	5000	350	*)	HF/C1220A	1 1/16-12 UN	400-P-131210
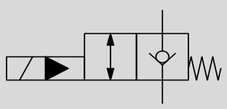		NG 10		WR22G_HA-10-...	36	140	c)	5000	350	*)	DH	M27 X 2	400-P-131125-en
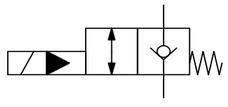		NG 12	SAE 16	WRVP22G-12A-_B...	47	180	c)	5000	350	*)	LA/C1620	1 5/16-12 UN	400-P-145130-en
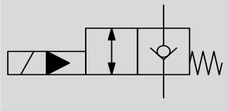		NG 16		WR22G_BA-16...	92	350	c)	6000	420	*)	EB	M42 X 2	400-P-150121-en
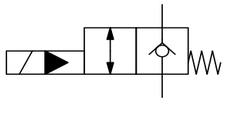		NG 10		WRA22G_DA-10...	36	140	c)	5000	350	*)	DD	M24 X 1.5	400-P-131121-en
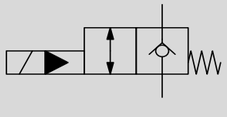		NG 10		WRA22G_CA-10...	36	140	c)	5000	350	*)	DC	M24 X 1.5	400-P-131120-en

Symbol	Picture	Nominal Size	Size (SAE)	Type Series	Qmax. [gpm]	Qmax. [l/min]	Flow Info	Pmax. [psi]	Pmax. [bar]	Pressure Info	Cavity	Threaded connection	Datasheet EN
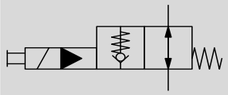		NG 05		WR22O_A5...	10	40	c)	5000	350	*)	AL	3/4-16 UNF	400-P-121126-en
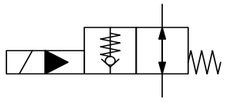		NG 05		WRP22OEA5...	10	40	c)	6000	420	*)	AL	3/4-16 UNF	400-P-121122-en
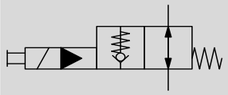		NG 05		WR22O_Z5...	10	40	c)	5000	350	*)	ALM	M20 X1.5	400-P-121127-en
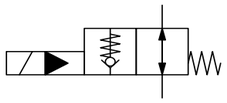		NG 08	SAE 10	WRVP22O-8X...	21	80	c)	5000	350	*)	AX/C1020	7/8-14 UNF	400-P-122121-en
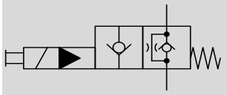		NG 05		WR22K_A5...	10	40	c)	5000	350	*)	AL	3/4-16 UNF	400-P-121141-en
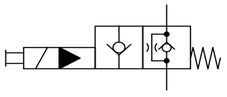		NG 05		WR22K_Z5...	10	40	c)	5000	350	*)	ALM	M20 X1.5	400-P-121140-en
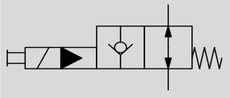		NG 10		WR22O_DA-10...	140	140	c)	5000	350	*)	DD	M24 X 1.5	400-P-131113-en
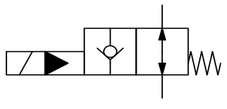		NG 10	SAE 12	WRV_22O-10F	36	140	c)	5000	350	*)	HF/C1220A	1 1/16-12 UN	400-P-131211-en
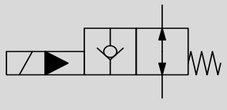		NG 12	SAE 16	WRVP22O-12A...	47	180	c)	5000	350	*)	LA/C1620	1 5/16-12 UN	400-P-145131-en

Symbol	Picture	Nominal Size	Size (SAE)	Type Series	Qmax. [gpm]	Qmax. [l/min]	Flow Info	Pmax. [psi]	Pmax. [bar]	Pressure Info	Cavity	Threaded connection	Datasheet EN
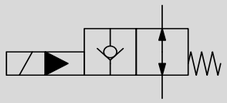		NG 16		WR22O_BA-16...	92	350	c)	6000	420	*)	EB	M42 X 2	400-P-150122-en
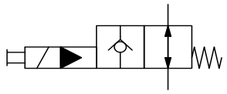		NG 10		WR22O_CA-10...	140	140	c)	5000	350	*)	DC	M24 X 1.5	400-P-131112-en
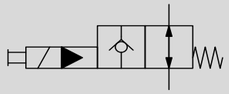		NG 10		WRA22O_CA-10...	36	140	c)	5000	350	*)	DC	M24 X 1.5	400-P-131122-en
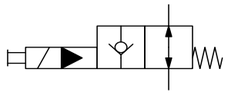		NG 10		WRA22O_DA-10...	36	140	c)	5000	350	*)	DD	M24 X 1.5	400-P-131123-en

2-way / 2-position Directional Seat Valves (double blocking, solenoid actuated)

→ Index

Symbol	Picture	Nominal Size	Size (SAE)	Type Series	Qmax. [gpm]	Qmax. [l/min]	Flow Info	Pmax. [psi]	Pmax. [bar]	Pressure Info	Cavity	Threaded connection	Datasheet EN
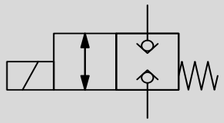		NG 01		WSP22GLA1...	1.25	5	c)	6000	420	*)	AL	3/4-16 UNF	400-P-120601-en
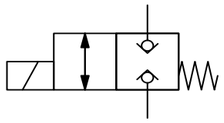		NG 03		WSP22GNA3...	3.75	15	c)	6000	420	*)	AL	3/4-16 UNF	400-P-120801-en
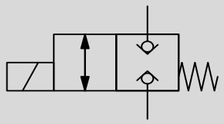		NG 06		W1C_B...	10	40	c)	4500	315	*)	AA	M5	400-P-110111-en
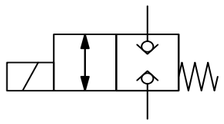		NG 06		W1C_B...	10	40	c)	4500	315	*)	AB	M5	400-P-110112-en
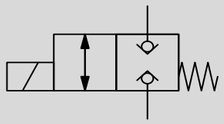		NG 08	SAE 10	WSDI22G-8X...	16	60	c)	4500	315	*)	AX/C1020	7/8-14 UNF	400-P-122150-en
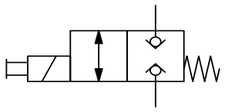		NG 05		WS22GNA5...	7.5	30	c)	3600	250	*)	AL	3/4-16 UNF	400-P-121100-en
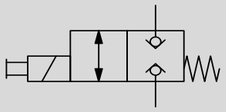		NG 05		WS22GNZ5...	7.5	30	c)	3600	250	*)	ALM	M20 X1.5	400-P-121101-en
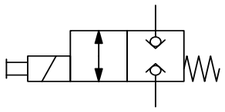		NG 05		WSDF22G-5LM-...A...	5.25	20	c)	3600	250	*)	ALM	M20 X1.5	400-P-121104-en
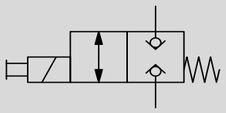		NG 05	SAE 08	WSDF22G-5H-...A...	5.25	20	c)	3600	250	*)	BH/C0820	3/4-16 UNF	400-P-121105-en

Symbol	Picture	Nominal Size	Size (SAE)	Type Series	Qmax. [gpm]	Qmax. [l/min]	Flow Info	Pmax. [psi]	Pmax. [bar]	Pressure Info	Cavity	Threaded connection	Datasheet EN
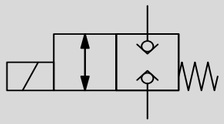		NG 05		WS22GDZ-5...	7.5	30	c)	5000	350	*)	ALM	M20 X1.5	400-P-121110-en
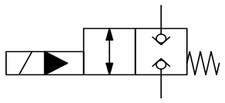		NG 10		WS22GNCB-10	37	140	c)	5000	350	*)	DC	M24 X 1.5	400-P-131101-en
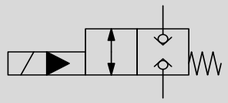		NG 10		WS22GN_DB-10...	37	140	c)	5000	350	*)	DD	M24 X 1.5	400-P-131106-en
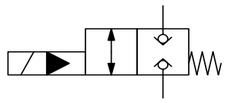		NG 10		WS22GN_HA-10...	37	140	c)	5000	350	*)	DH	M27 X 2	400-P-131102-en
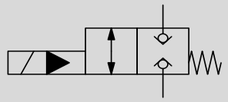		NG 10	SAE 12	WSVN22G-10F...	36	140	c)	5000	350	*)	HF/C1220A	1 1/16-12 UN	400-P-131310-en
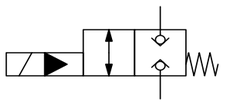		NG 16		WS22G_BB-16...	92	350	c)	6000	420	*)	EB	M42 X 2	400-P-150101-en
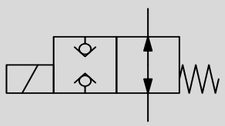		NG 01		WSP22OLA1...	1.25	5	c)	6000	420	*)	AL	3/4-16 UNF	400-P-120602-en
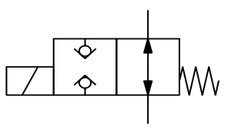		NG 03		WSP22ONA3...	3.75	15	c)	6000	420	*)	AL	3/4-16 UNF	400-P-120802-en
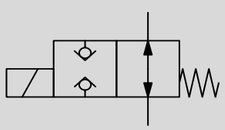		NG 05		WS22O.DZ...	7.5	30	c)	5000	350	*)	ALM	M20 X1.5	400-P-121110-en

Symbol	Picture	Nominal Size	Size (SAE)	Type Series	Qmax. [gpm]	Qmax. [l/min]	Flow Info	Pmax. [psi]	Pmax. [bar]	Pressure Info	Cavity	Threaded connection	Datasheet EN
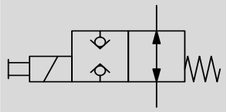		NG 05		WS22ONA5...	7.5	30	c)	3600	250	*)	AL	3/4-16 UNF	400-P-121102-en
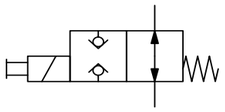		NG 05		WS22ONZ5...	7.5	30	c)	3600	250	*)	ALM	M20 X1.5	400-P-121103-en
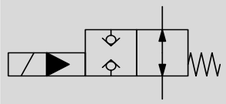		NG 10		WS22ONCB-10...	37	140	c)	5000	350	*)	DC	M24 X 1.5	400-P-131107-en
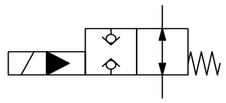		NG 10		WS22ONDB-10...	37	140	c)	5000	350	*)	DD	M24 X 1.5	400-P-131108-en
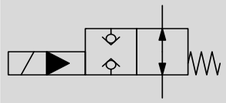		NG 10		WS22ONHA-10...	37	140	c)	5000	350	*)	DH	M27 X 2	400-P-131103-en
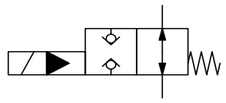		NG 10	SAE 12	WSVN22O-10F...	36	140	c)	5000	350	*)	HF/C1220A	1 1/16-12 UN	400-P-131311-en
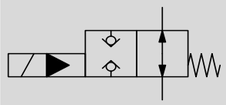		NG 16		WS22O.BB-16	36	350	c)	6000	420	*)	EB	M42 X 2	400-P-150102-en

2-way / 2-position Directional Seat Valves (EEx-solenoid actuated)

→ Index

Symbol	Picture	Nominal Size	Size (SAE)	Type Series	Qmax. [gpm]	Qmax. [l/min]	Flow Info	Pmax. [psi]	Pmax. [bar]	Pressure Info	Cavity	Threaded connection	Datasheet EN
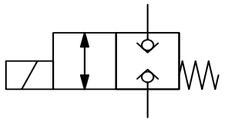		NG 06		EEx-W1C...	5.3	20	c)	4500	315	*)	AA	M5	400-P-110210-en

2-way / 2-position Directional Seat Valves (manually operated)

→ Index

Symbol	Picture	Nominal Size	Size (SAE)	Type Series	Qmax. [gpm]	Qmax. [l/min]	Flow Info	Pmax. [psi]	Pmax. [bar]	Pressure Info	Cavity	Threaded connection	Datasheet EN
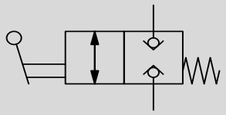		NG 06		W1WQ...	10	40	c)	4500	315	*)	AA	M5	400-P-110310-en
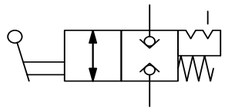		NG 06		W1T...	10	40	c)	4500	315	*)	AA	M5	400-P-110310-en
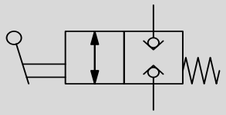		NG 06		W1WR...	10	40	c)	4500	315	*)	AB	M5	400-P-110311-en
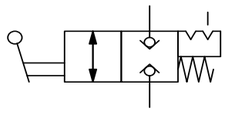		NG 06		W1T...	10	40	c)	4500	315	*)	AB	M5	400-P-110311-en
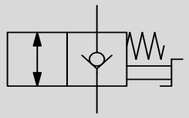	X	NG 08	SAE 10	MRPV-10-H	17	65	c)	5000	350	*)	C1020	7/8-14 UNF	520-P-120120-en

2-way / 2-position Directional Seat Valves (pneumatic operation)

→ Index

Symbol	Picture	Nominal Size	Size (SAE)	Type Series	Qmax. [gpm]	Qmax. [l/min]	Flow Info	Pmax. [psi]	Pmax. [bar]	Pressure Info	Cavity	Threaded connection	Datasheet EN
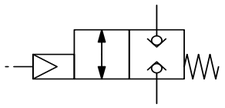		NG 06		W1Q...	10	40	c)	4500	315	*)	AA	M5	400-P-110410-en

2-way / 2-position Directional Seat Valves (with position monitoring)

→ Index

Symbol	Picture	Nominal Size	Size (SAE)	Type Series	Qmax. [gpm]	Qmax. [l/min]	Flow Info	Pmax. [psi]	Pmax. [bar]	Pressure Info	Cavity	Threaded connection	Datasheet EN
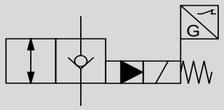		NG 05	SAE 08	WRV22GP-S-5H	11	40	c)	5000	350	*)	BH/C0820	3/4-16 UNF	400-P-121128-en
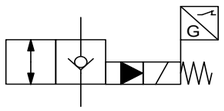		NG 10	SAE 12	WRVP22GP_-SA-10F	21	80	c)	5000	350	*)	HF/C1220A	1 1/16-12 UN	400-P-131119-en
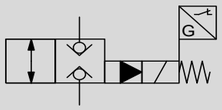		NG 10	SAE 12	WSVP22GPR-S-10F...	21	80	c)	5000	350	*)	HF/C1220A	1 1/16-12 UN	400-P-131109-en
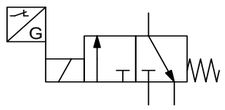		NG 05	SAE 08	WKDPP32G-S_-5P...	7.5	30	c)	6000	420	*)	GP/C0830	3/4-16 UNF	400-P-120826-en
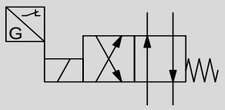		NG 05	SAE 08	WKDP42A-S_-5Q-...	7.5	30	c)	3600	250	*)	GQ/C0840	3/4-16 UNF	400-P-121226-en

3-way / 2-position Directional Seat Valves (solenoid actuated)

→ Index

Symbol	Picture	Nominal Size	Size (SAE)	Type Series	Qmax. [gpm]	Qmax. [l/min]	Flow Info	Pmax. [psi]	Pmax. [bar]	Pressure Info	Cavity	Threaded connection	Datasheet EN
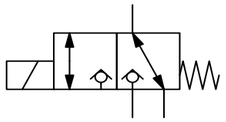		NG 06		W1D_B	10	40	c)	4500	315	*)	AC	M5	400-P-110116-en
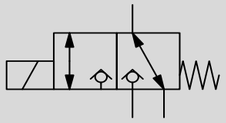		NG 06		W1D_B	10	40	c)	4500	315	*)	AD	M5	400-P-110117-en
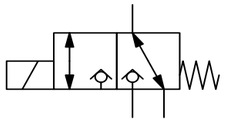		NG 08	SAE 10	W1N32G...8	10	40	c)	4500	315	*)	AU/C1030	7/8-14 UNF	400-P-112115-en
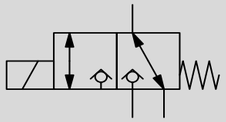		NG 08	SAE 10	W1P32G...8	10	40	c)	4500	315	*)	AU/C1030	7/8-14 UNF	400-P-112116-en
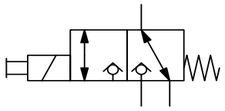		NG 05		WS32GNA5	5.5	22	c)	3600	250	*)	AM	3/4-16 UNF	400-P-121200-en
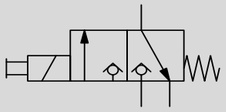		NG 10		WSP32GA10...	15	60	c)	3600	250	*)	DN	M33 X 2	400-P-131152-en

3-way / 2-position Directional Seat Valves (EEx-solenoid actuated)

→ Index

Symbol	Picture	Nominal Size	Size (SAE)	Type Series	Qmax. [gpm]	Qmax. [l/min]	Flow Info	Pmax. [psi]	Pmax. [bar]	Pressure Info	Cavity	Threaded connection	Datasheet EN
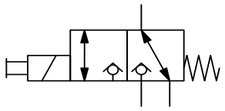		NG 06		EEx-W1D...	5	20	c)	4500	315	*)	AC	M5	400-P-110215-en
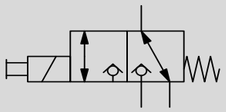		NG 06		EEx-W1D...	5	20	c)	4500	315	*)	AD	M5	400-P-110215-en

3-way / 2-position Directional Seat Valves (manually operated)

→ Index

Symbol	Picture	Nominal Size	Size (SAE)	Type Series	Qmax. [gpm]	Qmax. [l/min]	Flow Info	Pmax. [psi]	Pmax. [bar]	Pressure Info	Cavity	Threaded connection	Datasheet EN
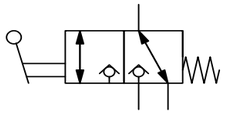		NG 06		W1X...	10	40	c)	4500	315	*)	AC	M5	400-P-110315-en
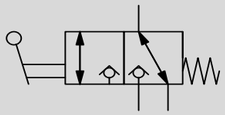		NG 06		W1X...	10	40	c)	4500	315	*)	AD	M5	400-P-110315-en
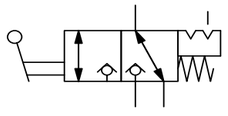		NG 06		W1U...	10	40	c)	4500	315	*)	AC	M5	400-P-110315-en
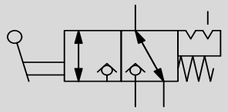		NG 06		W1U...	10	40	c)	4500	315	*)	AD	M5	400-P-110315-en

3-way / 2-position Directional Seat Valves (pneumatic operation)

→ Index

Symbol	Picture	Nominal Size	Size (SAE)	Type Series	Qmax. [gpm]	Qmax. [l/min]	Flow Info	Pmax. [psi]	Pmax. [bar]	Pressure Info	Cavity	Threaded connection	Datasheet EN
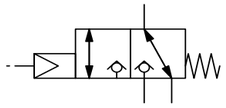		NG 06		W1R...	10	40	c)	4500	315	*)	AC	M5	400-P-110415-en
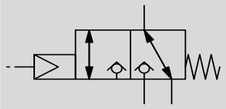		NG 06		W1S...	10	40	c)	4500	315	*)	AC	M5	400-P-110416-en

4-way / 2-position Directional Seat Valves (double locking)

→ Index

Symbol	Picture	Nominal Size	Size (SAE)	Type Series	Qmax. [gpm]	Qmax. [l/min]	Flow Info	Pmax. [psi]	Pmax. [bar]	Pressure Info	Cavity	Threaded connection	Datasheet EN
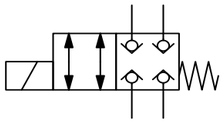		NG 08	SAE 10	WS42GNA-8...	8	30	c)	4500	315	*)	AT/C1040	7/8-14 UNF	400-P-126210-en

Special Directional Valves

→ Index

Symbol	Picture	Nominal Size	Size (SAE)	Type Series	Qmax. [gpm]	Qmax. [l/min]	Flow Info	Pmax. [psi]	Pmax. [bar]	Pressure Info	Cavity	Threaded connection	Datasheet EN
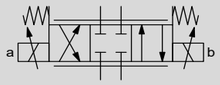		NG 08	SAE 10	PDFC-10-4L	8	30	b)	4000	280	**)	C1040	7/8-14 UNF	520-P-113020-en
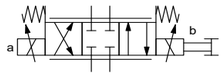		NG 08	SAE 10	PDFC-10-4L-M	8	30	b)	4000	280	**)	C1040	7/8-14 UNF	520-P-113020-en
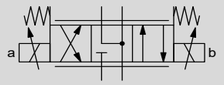		NG 08	SAE 10	PDFC-10-4M	8	30	b)	4000	280	**)	C1040	7/8-14 UNF	520-P-113020-en
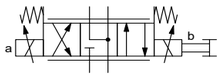		NG 08	SAE 10	PDFC-10-4M-M	8	30	b)	4000	280	**)	C1040	7/8-14 UNF	520-P-113020-en

Logic Cartridge Valves (active or passive)

→ Index

Symbol	Picture	Nominal Size	Size (SAE)	Type Series	Qmax. [gpm]	Qmax. [l/min]	Flow Info	Pmax. [psi]	Pmax. [bar]	Pressure Info	Cavity	Threaded connection	Datasheet EN
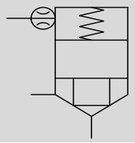		NG 10		WL22SD-10...	39	150	c)	6000	420	*)	DJ	M27 X 2	400-P-140101-en
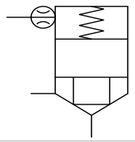		NG 16		WL22SD-16...	92	350	c)	6000	420	*)	EB	M42 X 2	400-P-160101-en
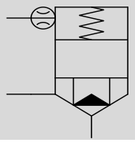		NG 10		WL22SDU / S1...	39	150	c)	6000	420	*)	DJ	M27 X 2	400-P-140111-en
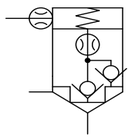		NG 10		WL22SDL-10	39	150	c)	6000	420	*)	DJ	M27 X 2	400-P-140121-en
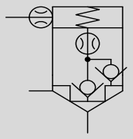		NG 16		WL22SDL-16...	92	350	c)	6000	420	*)	EB	M42 X 2	400-P-160121-en
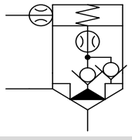		NG 10		WL22SDR / P-10...	39	150	c)	6000	420	*)	DJ	M27 X 2	400-P-140121-en
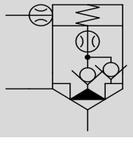		NG 16		WL22SDUR...	92	350	c)	6000	420	*)	EB	M42 X 2	400-P-160151-en

Manifold Mounting Directional Spool Valves (solenoid actuated)

→ Index

Symbol	Picture	Nominal Size	Size (SAE)	Type Series	Qmax. [gpm]	Qmax. [l/min]	Flow Info	Pmax. [psi]	Pmax. [bar]	Pressure Info	Cavity	Threaded connection	Datasheet EN
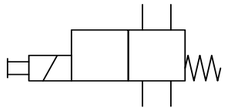		NG 04		WEDC-42...	6.5	25	c)	3600	250	*)	ISO 4401-02-01	M5	400-P-180120-en
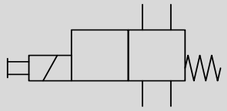		NG 06		WEDO-42...	21	80	c)	5000	350	*)	ISO 4401-03-02	M5	400-P-181110-en
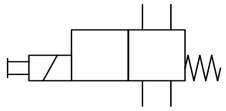		NG 06		WEDOU-42...	10	40	c)	5000	350	*)	ISO 4401-03-02	M5	400-P-181210-en
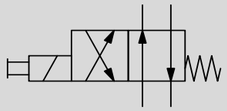		NG 06		WEDL-42...	10	40	c)	2300	160	*)	ISO 4401-03-02	M5	400-P-181260-en
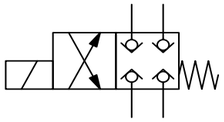		NG 06		WESDB-42-6...	8	30	c)	4500	315	*)	ISO 4401-03-02	M5	400-P-181320-en
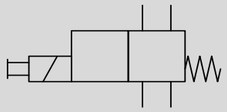		NG 06		WEVDK-42-6...	26	100	c)	5000	350	*)	ISO 4401-03-02	M5	400-P-181410-en
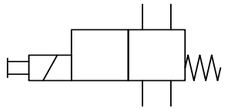	X	NG 10		WEVDE-42...	42	160	c)	4500	315	*)	ISO 4401-05-04	M6	400-P-185110-en
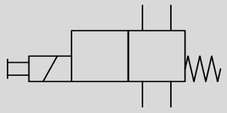	X	NG 10		WEDE-42...	31	120	c)	4500	315	*)	ISO 4401-05-04	M6	400-P-185210-en
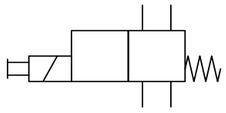	X	NG 10		WEDEU-42...	26	100	c)	4500	315	*)	ISO 4401-05-04	M6	400-P-185310-en

Symbol	Picture	Nominal Size	Size (SAE)	Type Series	Qmax. [gpm]	Qmax. [l/min]	Flow Info	Pmax. [psi]	Pmax. [bar]	Pressure Info	Cavity	Threaded connection	Datasheet EN
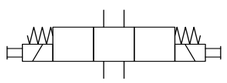	X	NG 04		WEDC-43...	6.5	25	c)	3600	250	*)	ISO 4401-02-01	M5	400-P-180120-en
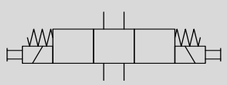	X	NG 06		WEDO-43...	21	80	c)	5000	350	*)	ISO 4401-03-02	M5	400-P-181110-en
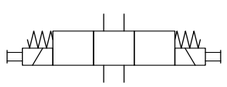	X	NG 06		WEDOU-43...	10	40	c)	5000	350	*)	ISO 4401-03-02	M5	400-P-181210-en
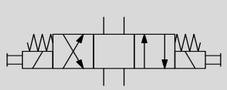	X	NG 06		WEDL-43...	10	40	c)	2300	160	*)	ISO 4401-03-02	M5	400-P-181260-en
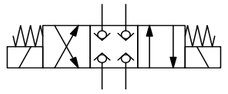		NG 06		WESDB-43-6...	8	30	c)	4500	315	*)	ISO 4401-03-02	M5	400-P-181330-en
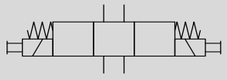	X	NG 06		WEVDK-43-6...	26	100	c)	5000	350	*)	ISO 4401-03-02	M5	400-P-181410-en
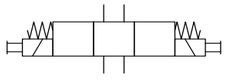	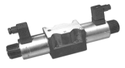	NG 10		WEVDE-43...	42	160	c)	4500	315	*)	ISO 4401-05-04	M6	400-P-185110-en
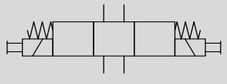		NG 10		WEDE-43...	31	120	c)	4500	315	*)	ISO 4401-05-04	M6	400-P-185210-en
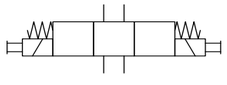	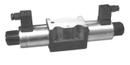	NG 10		WEDEU-43....	26	100	c)	4500	315	*)	ISO 4401-05-04	M6	400-P-185310-en

Manifold Mounting Directional Spool Valves (EEx-solenoid actuated)

→ Index

Symbol	Picture	Nominal Size	Size (SAE)	Type Series	Qmax. [gpm]	Qmax. [l/min]	Flow Info	Pmax. [psi]	Pmax. [bar]	Pressure Info	Cavity	Threaded connection	Datasheet EN	
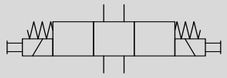	X	-	-	-	-	-	-	-	-	-	-	-	(Non-Standard)	(Non-Standard)

Manifold Mounting Directional Spool Valves (flow dependent auto-reversing)

→ Index

Symbol	Picture	Nominal Size	Size (SAE)	Type Series	Qmax. [gpm]	Qmax. [l/min]	Flow Info	Pmax. [psi]	Pmax. [bar]	Pressure Info	Cavity	Threaded connection	Datasheet EN
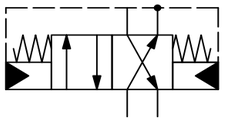		NG 06		WOFA...	8	30	c)	3000	210	*)	ISO 4401-03-02	M5	400-P-220110-en
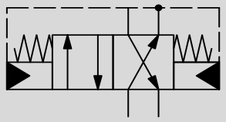		NG 10		WOFB...	21	80	c)	3000	210	*)	ISO 4401-05-04	M6	400-P-221110-en

Stack Mounting Directional Valves (solenoid actuated, direct acting)

→ Index

Symbol	Picture	Nominal Size	Size (SAE)	Type Series	Qmax. [gpm]	Qmax. [l/min]	Flow Info	Pmax. [psi]	Pmax. [bar]	Pressure Info	Cavity	Threaded connection	Datasheet EN
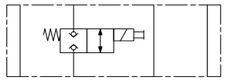		NG 06		SWESD-_-6...	10	40	c)	4500	315	*)	ISO 4401-03-02	M5	400-P-116110-en
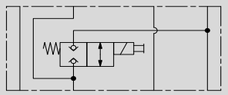		NG 06		SWESD-__-6...	10	40	c)	4500	315	*)	ISO 4401-03-02	M5	400-P-116110-en
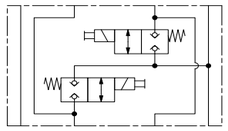		NG 06		SWESD-___-6...	10	40	c)	4500	315	*)	ISO 4401-03-02	M5	400-P-116110-en

Stack Mounting Directional Valves (EEx-solenoid actuated)

→ Index

Symbol	Picture	Nominal Size	Size (SAE)	Type Series	Qmax. [gpm]	Qmax. [l/min]	Flow Info	Pmax. [psi]	Pmax. [bar]	Pressure Info	Cavity	Threaded connection	Datasheet EN
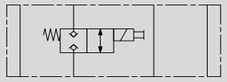		NG 06		EEx-SWESB-_-6...	5	20	c)	4500	315	*)	ISO 4401-03-02	M5	400-P-116210-en
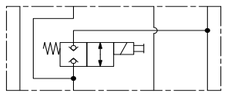		NG 06		EEx-SWESB-__-6...	5	20	c)	4500	315	*)	ISO 4401-03-02	M5	400-P-116210-en
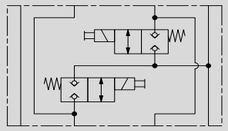		NG 06		EEx-SWESB-___-6...	5	20	c)	4500	315	*)	ISO 4401-03-02	M5	400-P-116210-en

Stack Mounting Directional Valves (solenoid actuated, two-stage)

→ Index

Symbol	Picture	Nominal Size	Size (SAE)	Type Series	Qmax. [gpm]	Qmax. [l/min]	Flow Info	Pmax. [psi]	Pmax. [bar]	Pressure Info	Cavity	Threaded connection	Datasheet EN
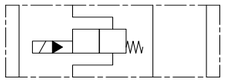	X	NG 06		SWR22..EDA	16	60	c)	4500	315	*)	ISO 4401-03-02	M5	400-P-230120-en
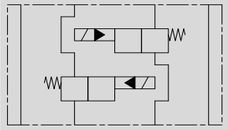	X	NG 06		SWR22..EA	10	40	c)	4500	315	*)	ISO 4401-03-02	M5	400-P-230125-en
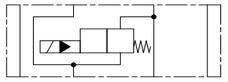	X	NG 06		SWRA22..ECA-__-6	21	80	c)	4500	315	*)	ISO 4401-03-02	M5	400-P-230130-en
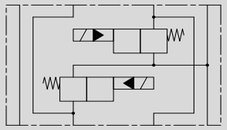	X	NG 06		SWRA22..ECA-___-6	21	80	c)	4500	315	*)	ISO 4401-03-02	M5	400-P-230130-en
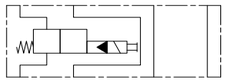	X	NG 06		SWS22..NDA	16	60	c)	4500	315	*)	ISO 4401-03-02	M5	400-P-230501-en
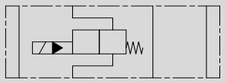	X	NG 10		SWR22..EDA	36	140	c)	4500	315	*)	ISO 4401-05-04	M6	400-P-235120-en
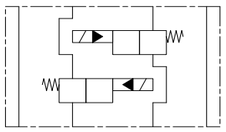	X	NG 10		SWR22..ECA	36	140	c)	4500	315	*)	ISO 4401-05-04	M6	400-P-235125-en
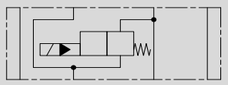	X	NG 10		SWRA22..ECA	36	140	c)	4500	315	*)	ISO 4401-05-04	M6	400-P-235130-en
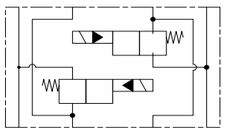	X	NG 10		SWRA22..ECA	36	140	c)	4500	315	*)	ISO 4401-05-04	M6	400-P-235130-en

Symbol	Picture	Nominal Size	Size (SAE)	Type Series	Qmax. [gpm]	Qmax. [l/min]	Flow Info	Pmax. [psi]	Pmax. [bar]	Pressure Info	Cavity	Threaded connection	Datasheet EN
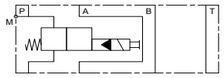	X	NG 10		SWS22..NDA	36	140	c)	4500	315	*)	ISO 4401-05-04	M6	400-P-235510-en
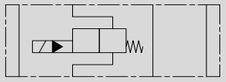	X	NG 10		SWS22..NCB	36	140	c)	5000	350	*)	ISO 4401-05-04	M6	400-P-235520-en
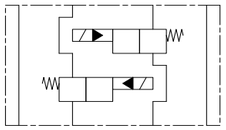	X	NG 10		SWS22..NCB	36	140	c)	5000	350	*)	ISO 4401-05-04	M6	400-P-235520-en

Flow Valves

Throttle Valves

→ Index

Symbol	Picture	Nominal Size	Size (SAE)	Type Series	Qmax. [gpm]	Qmax. [l/min]	Flow Info	Pmax. [psi]	Pmax. [bar]	Pressure Info	Cavity	Threaded connection	Datasheet EN
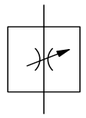	X	NG 08	SAE 10	NFCV-08	10	37	b)	5000	350	**)	C0820	3/4-16 UNF	520-P-020110-en
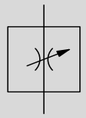	X	NG 08	SAE 10	NFCV-10	18	68	b)	5000	350	**)	C1020	7/8-14 UNF	520-P-020120-en
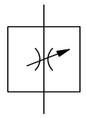	X	NG 08	SAE 10	NFFC-10	8	30	b)	5000	350	**)	C1020	7/8-14 UNF	520-P-020020-en
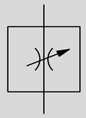	X	NG 08	SAE 10	MRFC-10	18	68	b)	5000	350	**)	C1020	7/8-14 UNF	520-P-022020-en
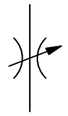		NG 05		MDPWA-5...	13	50	c)	5000	350	*)	AW	M20 X1.5	400-P-405071-en
		NG 10		MDPAA-10...	36	140	c)	5000	350	*)	CA	M18 X 1.5	400-P-405101-en

Throttle Check Valves

→ Index

Symbol	Picture	Nominal Size	Size (SAE)	Type Series	Qmax. [gpm]	Qmax. [l/min]	Flow Info	Pmax. [psi]	Pmax. [bar]	Pressure Info	Cavity	Threaded connection	Datasheet EN
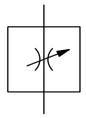	X	NG 05	SAE 08	FCVL-08	10	37	b)	5000	350	**)	C0820	3/4-16 UNF	520-P-020210-en
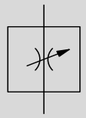	X	NG 08	SAE 10	FCVL-10	18	68	b)	5000	350	**)	C1020	7/8-14 UNF	520-P-020220-en
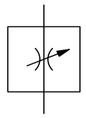	X	NG 10	SAE 12	FCVL-12	36	135	b)	5000	350	**)	C1220	1 1/16-12 UN	520-P-020230-en
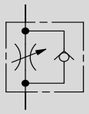		NG 06		MDR2-6F...	21	80	c)	5000	350	*)	DF	M20 X1.5	400-P-407110-en
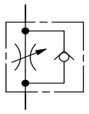		NG 10		MDR2-10F...	42	160	c)	5000	350	*)	DF	M20 X1.5	400-P-407111-en

Flow Control Valves

→ Index

Symbol	Picture	Nominal Size	Size (SAE)	Type Series	Qmax. [gpm]	Qmax. [l/min]	Flow Info	Pmax. [psi]	Pmax. [bar]	Pressure Info	Cavity	Threaded connection	Datasheet EN
		NG 05	SAE 08	PCFC-08	5.5	22	b)	5000	350	*)	C0820	3/4-16 UNF	520-P-020310-en
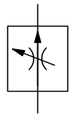		NG 08	SAE 10	PCFC-10	12	45	b)	5000	350	*)	C1020	7/8-14 UNF	520-P-020320-en
	X	NG 10	SAE 12	PCFC-12	24	90	b)	5000	350	*)	C1220	1 1/16-12 UN	520-P-020330-en
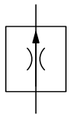		NG 01		MRPA-2-1...	1.25	5	c)	3600	250	*)	GB	G 1/4"	400-P-408101-en
	X	NG 10		MRP-2C-10...	10	40	c)	4500	315	*)	DC	M24 X 1.5	400-P-410101-en
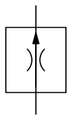	X	NG 10		MRP-2D-10...	10	40	c)	4500	315	*)	DD	M24 X 1.5	400-P-410101-en
		NG 10		MRPA-2-10...	31	120	c)	5000	350	*)	ER	M33 X 2	400-P-410201-en
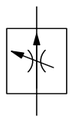		NG 16		MRPB-2-16...	53	200	c)	5000	350	*)	EF	M42 X 2	400-P-411101-en
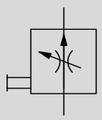		NG 10		SRCB-H-2	21	80	a)	4500	315	*)	GB3NM42	M42 X 1.5	100-P-000252-en

Symbol	Picture	Nominal Size	Size (SAE)	Type Series	Qmax. [gpm]	Qmax. [l/min]	Flow Info	Pmax. [psi]	Pmax. [bar]	Pressure Info	Cavity	Threaded connection	Datasheet EN
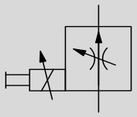	X	NG 08	SAE 10	EPFI-10	8	30	a)	5000	350	*)	C1020	7/8-14 UNF	520-P-111020-en
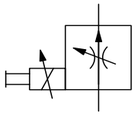	X	NG 10	SAE 12	EPFI-12	15	55	a)	5000	350	*)	C1220	1 1/16-12 UN	520-P-111030-en
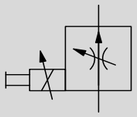	X	NG 12	SAE 16	EPFC-16	20	75	a)	5000	350	*)	C1620	1 5/16-12 UN	520-P-111040-en

Flow Control Valves with separate drain (3-way)

→ Index

Symbol	Picture	Nominal Size	Size (SAE)	Type Series	Qmax. [gpm]	Qmax. [l/min]	Flow Info	Pmax. [psi]	Pmax. [bar]	Pressure Info	Cavity	Threaded connection	Datasheet EN
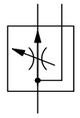		NG 05	SAE 08	BFCV-08	5.5	22	b)	5000	350	**)	C0830	3/4-16 UNF	520-P-020510-en
	X	NG 08	SAE 10	BFCV-10	12	45	b)	5000	350	**)	C1030	7/8-14 UNF	520-P-020520-en
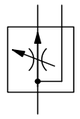	X	NG 10	SAE 12	BFCV-12	20	75	b)	5000	350	**)	C1230	1 1/16-12 UN	520-P-020530-en
		NG 12	SAE 16	BFCV-16	29	110	b)	5000	350	**)	C1630	1 5/16-12 UN	520-P-020540-en
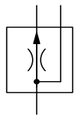		NG 05		MVR-3D...	16	60	c)	4500	315	*)	MDD	M24 X 1.5	400-P-412101-en
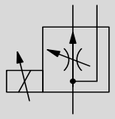		NG 05		SRCA	16	60	a)	3600	250	*)	GB3WM33	M33 X 1.5	100-P-000144-en
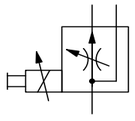		NG 10		SRCB-H-3	29	100	a)	4500	315	*)	GB3NM42	M42 X 1.5	100-P-000233-en
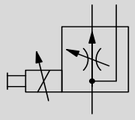		NG 10		SRCB-SNT	29	100	a)	4500	315	*)	GB3NM42	M42 X 1.5	100-P-000243-en
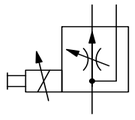	X	NG 08	SAE 10	EPFB-10	8	30	a)	5000	350	*)	C1030	7/8-14 UNF	520-P-111520-en

Symbol	Picture	Nominal Size	Size (SAE)	Type Series	Qmax. [gpm]	Qmax. [l/min]	Flow Info	Pmax. [psi]	Pmax. [bar]	Pressure Info	Cavity	Threaded connection	Datasheet EN
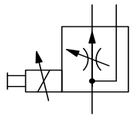	X	NG 10	SAE 12	EPFB-12	15	55	a)	5000	350	*)	C1230	1 1/16-12 UN	520-P-111530-en
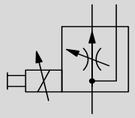	X	NG 12	SAE 16	EPFD-16	20	75	a)	5000	350	*)	C1630	1 5/16-12 UN	520-P-111540-en

Flow Divider/Combiner Valves

→ Index

Symbol	Picture	Nominal Size	Size (SAE)	Type Series	Qmax. [gpm]	Qmax. [l/min]	Flow Info	Pmax. [psi]	Pmax. [bar]	Pressure Info	Cavity	Threaded connection	Datasheet EN
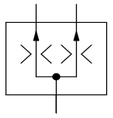		NG 05	SAE 08	FDCV-08	8	30	b)	5000	350	**)	C0840	3/4-16 UNF	520-P-021010-en
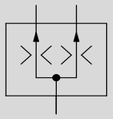		NG 08	SAE 10	FDCV-10	16	60	b)	5000	350	**)	C1040	7/8-14 UNF	520-P-021020-en
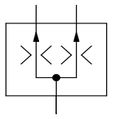		NG 10	SAE 12	FDCV-12	31	120	b)	5000	350	**)	C1240	1 1/16-12 UN	520-P-021030-en
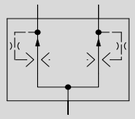	X	NG 05	SAE 08	FDCT-08	8	30	b)	5000	350	**)	C0840	3/4-16 UNF	520-P-021110-en
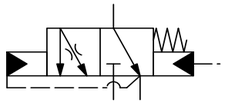	X	NG 05	SAE 08	PODS-08	8	30	b)	5000	350	**)	C0840	3/4-16 UNF	520-P-071610-en
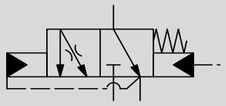	X	NG 08	SAE 10	PODS-10	16	60	b)	5000	350	**)	C1040	7/8-14 UNF	520-P-071620-en
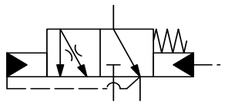		NG 10	SAE 12	PODS-12	24	90	b)	5000	350	**)	C1240	1 1/16-12 UN	520-P-071630-en
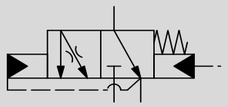		NG 12	SAE 16	PODS-16	36	135	b)	5000	350	**)	C1640	1 5/16-12 UN	520-P-071640-en
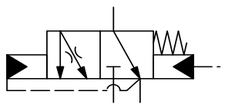		NG 16	SAE 20	PODS-20	59	225	b)	3000	210	**)	C2040	1 5/16-12 UN	520-P-071650-en

Symbol	Picture	Nominal Size	Size (SAE)	Type Series	Qmax. [gpm]	Qmax. [l/min]	Flow Info	Pmax. [psi]	Pmax. [bar]	Pressure Info	Cavity	Threaded connection	Datasheet EN
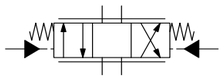		NG 10		MDHP43...	39	150	c)	6000	420	*)	DZ	M36 X 2	400-P-630101-en

El. Proportional Throttle Valves

→ Index

Symbol	Picture	Nominal Size	Size (SAE)	Type Series	Qmax. [gpm]	Qmax. [l/min]	Flow Info	Pmax. [psi]	Pmax. [bar]	Pressure Info	Cavity	Threaded connection	Datasheet EN
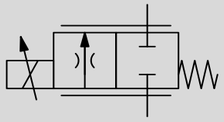		NG 10		MDRP-G-10-...	12	45	c)	3600	250	*)	DC	M24 X 1.5	400-P-610102-en
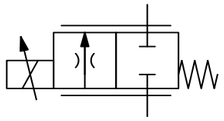		NG 10		MDRP-DG-10-...	12	45	c)	3600	250	*)	DD	M24 X 1.5	400-P-610101-en
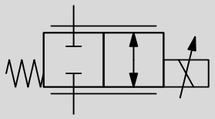	X	NG 08	SAE 10	PFCV-10-C	16	60	c)	5000	350	*)	C1020	7/8-14 UNF	520-P-112020-en
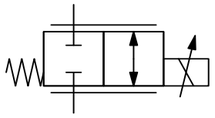	X	NG 10	SAE 12	PFCV-12-C	25	95	c)	5000	350	*)	C1220	1 1/16-12 UN	520-P-112030-en
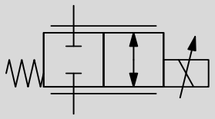	X	NG 12	SAE 16	PFCV-16-C	36	135	c)	5000	350	*)	C1620	1 5/16-12 UN	520-P-112040-en
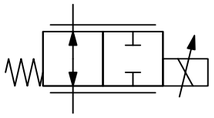	X	NG 08	SAE 10	PFCV-10-O	16	60	c)	5000	350	*)	C1020	7/8-14 UNF	520-P-112020-en
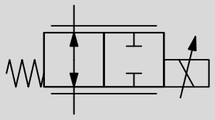	X	NG 10	SAE 12	PFCV-12-O	25	95	c)	5000	350	*)	C1220	1 1/16-12 UN	520-P-112030-en
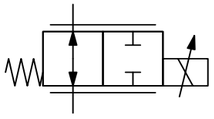	X	NG 12	SAE 16	PFCV-16-O	36	135	c)	5000	350	*)	C1620	1 5/16-12 UN	520-P-112040-en
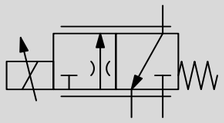		NG 10		MDRP-DGE-10-...	12	45	c)	3600	250	*)	DD	M24 X 1.5	400-P-610101-en

Symbol	Picture	Nominal Size	Size (SAE)	Type Series	Qmax. [gpm]	Qmax. [l/min]	Flow Info	Pmax. [psi]	Pmax. [bar]	Pressure Info	Cavity	Threaded connection	Datasheet EN
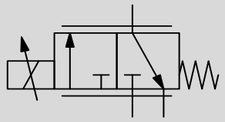		NG 05		MDR32G-5...	8	30	c)	3600	250	*)	AM	3/4-16 UNF	400-P-618101-en
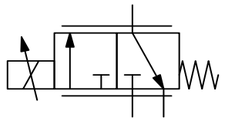		NG 05		MDT32GS-5...	10	40	c)	3600	250	*)	AM	3/4-16 UNF	400-P-618121-en
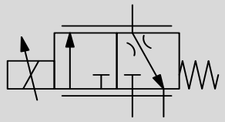		NG 05		MDR32GN-5-S600...	8	30	c)	3600	250	*)	AM	3/4-16 UNF	400-P-618101-en
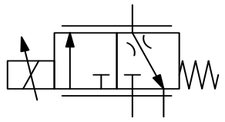		NG 05		MDT32GT-5...	10	40	c)	3600	250	*)	AM	3/4-16 UNF	400-P-618121-en
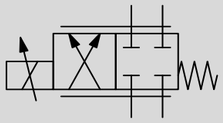		NG 05		MDR42AD-5...	8	30	c)	3600	250	*)	AN	3/4-16 UNF	400-P-618201-en
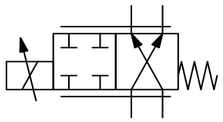		NG 05		MDR42ANK-5...	8	30	c)	3600	250	*)	AN	3/4-16 UNF	400-P-618201-en
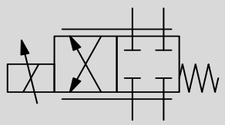		NG 05		MDT42...2NNY...	15	55	c)	3600	250	*)	AN	3/4-16 UNF	400-P-618221-en
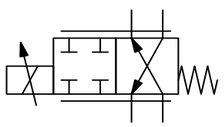		NG 05		MDT42...2NY...	15	55	c)	3600	250	*)	AN	3/4-16 UNF	400-P-618221-en

El. Proportional Throttle Valve Poppet Style

→ Index

Symbol	Picture	Nominal Size	Size (SAE)	Type Series	Qmax. [gpm]	Qmax. [l/min]	Flow Info	Pmax. [psi]	Pmax. [bar]	Pressure Info	Cavity	Threaded connection	Datasheet EN
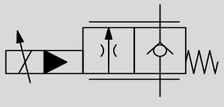		NG 05		MVRPSBA-LG-5-...	13	50	c)	3600	250	*)	AL	3/4-16 UNF	400-P-605101-en
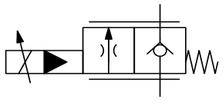		NG 05	SAE 08	MVRPSBA-HG-5-...	13	50	c)	3600	250	*)	BH/C0820	3/4-16 UNF	400-P-605102-en
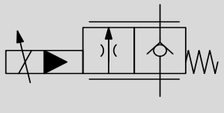		NG 10		MVRPSBB-HG-10-...	36	140	c)	3600	250	*)	DH	M27 X 2	400-P-615101-en
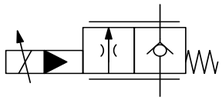		NG 16		MVRPSBB-RG-16-...	66	250	c)	3600	250	*)	ER	M33 X 2	400-P-616101-en
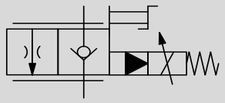		NG 05	SAE 08	MDRSV2G-05-BH	16	60	c)	3600	250	*)	BH/C0820	3/4-16 UNF	400-P-625111-en

Stack Mounting Flow Regulator / Throttle Valve (manual adjuster)

→ Index

Symbol	Picture	Nominal Size	Size (SAE)	Type Series	Qmax. [gpm]	Qmax. [l/min]	Flow Info	Pmax. [psi]	Pmax. [bar]	Pressure Info	Cavity	Threaded connection	Datasheet EN
	X	NG 06		SD...	16	60	c)	4500	315	*)	ISO 4401-03-02	M5	400-P-427101-en

Stack Mounting Throttle / Check Valve (manual adjuster)

→ Index

Symbol	Picture	Nominal Size	Size (SAE)	Type Series	Qmax. [gpm]	Qmax. [l/min]	Flow Info	Pmax. [psi]	Pmax. [bar]	Pressure Info	Cavity	Threaded connection	Datasheet EN
		NG 04		SRDA-P...	6.5	25	c)	3600	250	*)	ISO 4401-02-01	M5	400-P-425101-en
		NG 06		SMDR-6...	21	80	c)	5000	350	*)	ISO 4401-03-02	M5	400-P-430101-en
		NG 10		SMDR-10...	42	160	c)	5000	350	*)	ISO 4401-05-04	M6	400-P-431101-en
		NG 16		SRDB-AA...	68	260	c)	5000	350	*)	ISO 4401-07-07	M10	400-P-436101-en

Pressure Valves

Unloading Valves

→ Index

Symbol	Picture	Nominal Size	Size (SAE)	Type Series	Qmax. [gpm]	Qmax. [l/min]	Flow Info	Pmax. [psi]	Pmax. [bar]	Pressure Info	Cavity	Threaded connection	Datasheet EN
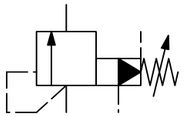		NG 05		DWPB-4N...	8	30	c)	3600	250	*)	AN	3/4-16 UNF	400-P-379101-en
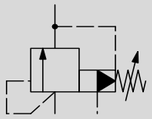		NG 10		DWPA...	16	60	c)	4500	315	*)	DD	M24 X 1.5	400-P-380101-en
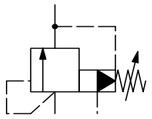		NG 10		DWPBU...	16	60	c)	4500	315	*)	DD	M24 X 1.5	400-P-380101-en

Pressure Relief Valves

→ Index

Symbol	Picture	Nominal Size	Size (SAE)	Type Series	Qmax. [gpm]	Qmax. [l/min]	Flow Info	Pmax. [psi]	Pmax. [bar]	Pressure Info	Cavity	Threaded connection	Datasheet EN
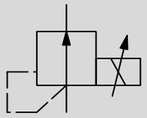		NG 01		DVSA-1L...	0.4	1.5	c)	6000	420	*)	AL	3/4-16 UNF	400-P-580101-en
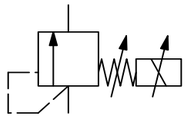		NG 01		DVSA-1LG...	0.4	1.5	c)	6000	420	*)	AL	3/4-16 UNF	400-P-580201-en
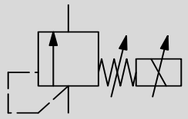		NG 06		WUVB-1LO...	0.4	1.5	c)	6000	420	*)	AL	3/4-16 UNF	400-P-287101-en
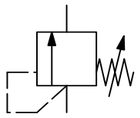		NG 04		DDPC-1L...	8	30	c)	6000	420	*)	AL	3/4-16 UNF	400-P-260111-en
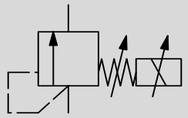		NG 04		DBDSB-1L...	6.3	24	c)	3600	250	*)	AL	3/4-16 UNF	400-P-585301-en
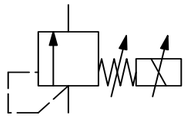		NG 04		DBDSB-1LG...	6.3	24	c)	3600	250	*)	AL	3/4-16 UNF	400-P-585401-en
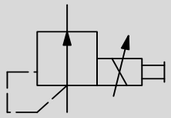		NG 04		DBDTC-1L...	6.3	24	c)	5700	400	*)	AL	3/4-16 UNF	400-P-585111-en
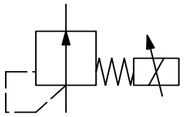		NG 04		DBDTC-1LG...	6.3	24	c)	5700	400	*)	AL	3/4-16 UNF	400-P-585211-en
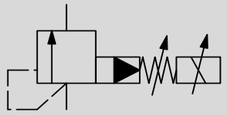		NG 05		DBVSA-1L...	16	60	c)	5700	400	*)	AL	3/4-16 UNF	400-P-586051-en

Symbol	Picture	Nominal Size	Size (SAE)	Type Series	Qmax. [gpm]	Qmax. [l/min]	Flow Info	Pmax. [psi]	Pmax. [bar]	Pressure Info	Cavity	Threaded connection	Datasheet EN
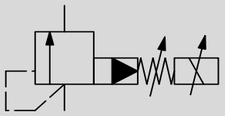		NG 05		DBVSA-1LG...	16	60	c)	4300	300	*)	AL	3/4-16 UNF	400-P-586101-en
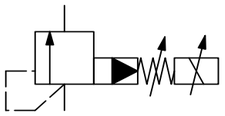		NG 10		DBVSA-1CG...	31	120	c)	4300	300	*)	DC	M24 X 1.5	400-P-587101-en
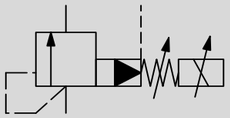		NG 16		DVPSA-3BG...	92	350	c)	5000	350	*)	EB	M42 X 2	400-P-581651-en
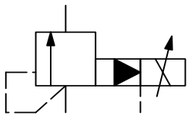		NG 10		DVPSA-3D...	31	120	c)	4500	315	*)	DD	M24 X 1.5	400-P-581401-en
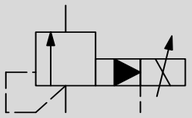		NG 16		DVPSB-3B...	92	350	c)	5000	350	*)	EB	M42 X 2	400-P-581601-en
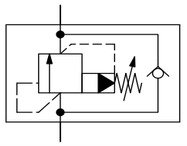		NG 10		DVPA-RV-1C-10...	26	100	c)	5000	350	*)	DC	M24 X 1.5	400-P-280131-en
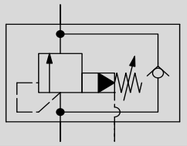		NG 10		DVPA-RV-3D-10...	26	100	c)	5000	350	*)	DD	M24 X 1.5	400-P-280141-en
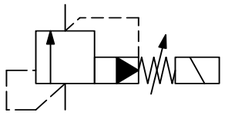		NG 10		WUVPO/LC-1...	36	140	c)	5000	350	*)	DC	M24 X 1.5	400-P-290101-en
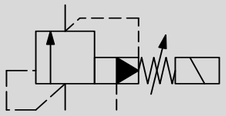		NG 10		WUVPO/LC-2...	36	140	c)	5000	350	*)	DD	M24 X 1.5	400-P-290111-en

Symbol	Picture	Nominal Size	Size (SAE)	Type Series	Qmax. [gpm]	Qmax. [l/min]	Flow Info	Pmax. [psi]	Pmax. [bar]	Pressure Info	Cavity	Threaded connection	Datasheet EN
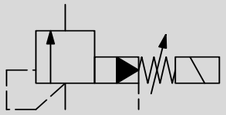		NG 10		WUVPO/LC-3...	36	140	c)	5000	350	*)	DD	M24 X 1.5	400-P-290121-en
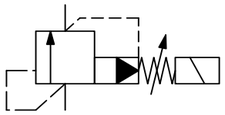		NG 16		WUVPA-1...	92	350	c)	6000	420	*)	EB	M42 X 2	400-P-295301-en
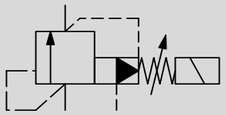		NG 16		WUVPA-2...	92	350	c)	6000	420	*)	EB	M42 X 2	400-P-295311-en
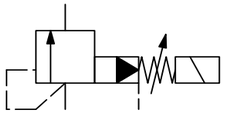		NG 16		WUVPA-3...	92	350	c)	6000	420	*)	EB	M42 X 2	400-P-295321-en
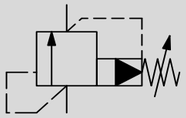		NG 10		DVPA-1C-10-...	36	140	c)	5000	350	*)	DC	M24 X 1.5	400-P-280101-en
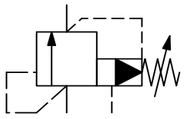		NG 10		DVPA-2D-10-...	36	140	c)	5000	350	*)	DD	M24 X 1.5	400-P-280111-en
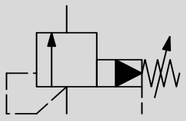		NG 10		DVPA-3D-10-...	36	140	c)	5000	350	*)	DD	M24 X 1.5	400-P-280121-en
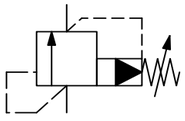		NG 16		DVPB-1-16-...	92	350	c)	6000	420	*)	EB	M42 X 2	400-P-285301-en
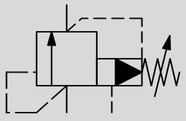		NG 16		DVPB-2-16-...	92	350	c)	6000	420	*)	EB	M42 X 2	400-P-285311-en

Symbol	Picture	Nominal Size	Size (SAE)	Type Series	Qmax. [gpm]	Qmax. [l/min]	Flow Info	Pmax. [psi]	Pmax. [bar]	Pressure Info	Cavity	Threaded connection	Datasheet EN
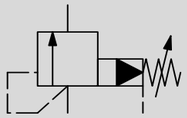		NG 16		DVPB-3-16-...	92	350	c)	6000	420	*)	EB	M42 X 2	400-P-285321-en
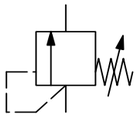		NG 04		UVP 4	5	20	d)	7100	500	*)	see Datasheet		300-P-9050065-en
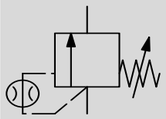		NG 20		DVP 20	87	330	d)	6400	450	*)	see Datasheet		300-P-9050068-en
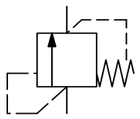		NG 10		DDPSVA-1	26	100	c)	4700	330	*)	see Datasheet		400-P-273101-en
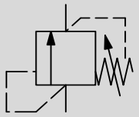		NG 10		DDPB-1C...	36	140	c)	6400	450	*)	DC	M24 X 1.5	400-P-270101-en
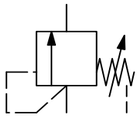		NG 10		DDPB-3D...	36	140	c)	6400	450	*)	DD	M24 X 1.5	400-P-270201-en
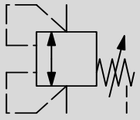		NG 10		DDPDB-3D...	36	140	c)	6400	450	*)	DD	M24 X 1.5	400-P-271101-en
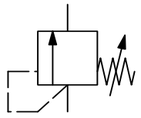		NG 05	SAE 08	RVPD-08	1.8	7.5	b)	5000	350	**)	C0820	3/4-16 UNF	520-P-030110-en
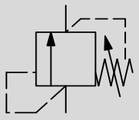		NG 08	SAE 10	RVPD-10	1.8	7.5	b)	5000	350	**)	C1020	7/8-14 UNF	520-P-030120-en

Symbol	Picture	Nominal Size	Size (SAE)	Type Series	Qmax. [gpm]	Qmax. [l/min]	Flow Info	Pmax. [psi]	Pmax. [bar]	Pressure Info	Cavity	Threaded connection	Datasheet EN
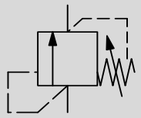		NG 05	SAE 08	RVDA-08	10	37	b)	5000	350	**)	C0820	3/4-16 UNF	520-P-030210-en
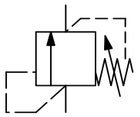		NG 08	SAE 10	RVDA-10	20	75	b)	5000	350	**)	C1020	7/8-14 UNF	520-P-030220-en
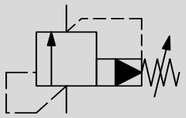	X	NG 05	SAE 08	RVPS-08	15	56	b)	5000	350	**)	C0820	3/4-16 UNF	520-P-030310-en
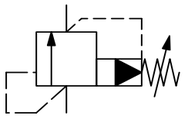	X	NG 08	SAE 10	RVPS-10	25	98	b)	5000	350	**)	C1020	7/8-14 UNF	520-P-030320-en
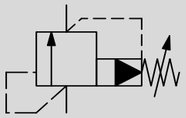	X	NG 10	SAE 12	RVPS-12	59	226	b)	5000	350	**)	C1220	1 1/16-12 UN	520-P-030330-en
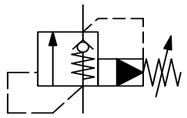		NG 08	SAE 10	RVPP-10	25	98	b)	5000	350	**)	C1020	7/8-14 UNF	520-P-030420-en
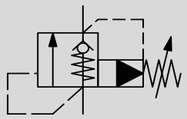		NG 10	SAE 12	RVPP-12	59	226	b)	5000	350	**)	C1220	1 1/16-12 UN	520-P-030430-en
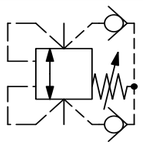		NG 08	SAE 10	RVBD-08	10	37	b)	5000	350	**)	C0820	3/4-16 UNF	520-P-030510-en
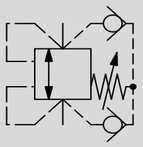		NG 08	SAE 10	RVBD-10	20	75	b)	5000	350	**)	C1020	7/8-14 UNF	520-P-030520-en

Symbol	Picture	Nominal Size	Size (SAE)	Type Series	Qmax. [gpm]	Qmax. [l/min]	Flow Info	Pmax. [psi]	Pmax. [bar]	Pressure Info	Cavity	Threaded connection	Datasheet EN
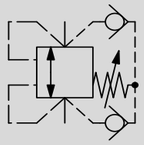		NG 10	SAE 12	RVBD-12	39	150	b)	5000	350	**)	C1220	1 1/16-12 UN	520-P-030530-en
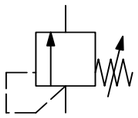		NG 05	SAE 08	RVDI-08	5.5	22	b)	5000	350	**)	C0820	3/4-16 UNF	520-P-030610-en
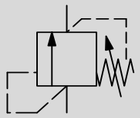		NG 08	SAE 10	RVDI-10	10	37	b)	5000	350	**)	C1020	7/8-14 UNF	520-P-030620-en
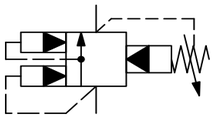		NG 08	SAE 10	RVBS-10	25	94	b)	5000	350	**)	C1020	7/8-14 UNF	520-P-030720-en
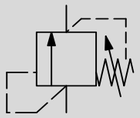		NG 08	SAE 10	PUVA-10	0.8	3.7	b)	5000	350	**)	C1030	7/8-14 UNF	520-P-030820-en
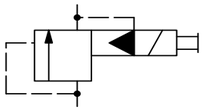	X	NG 08	SAE 10	ESRV-10	25	98	b)	5000	350	**)	C1020	7/8-14 UNF	520-P-030920-en
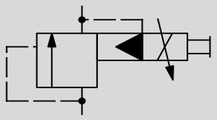	X	NG 08	SAE 10	ERVP-10	26	95	b)	5000	350	**)	C1020	7/8-14 UNF	520-P-110320-en
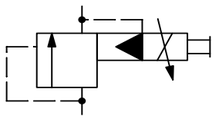	X	NG 10	SAE 12	ERVP-12	59	225	b)	5000	350	**)	C1220	1 1/16-12 UN	520-P-110330-en
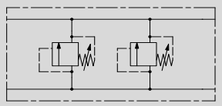	X	NG 08	SAE 10	CPRV-10	20	75	b)	5000	350	**)	C1020	7/8-14 UNF	520-P-031020-en

Pressure Reducing Valves

→ Index

Symbol	Picture	Nominal Size	Size (SAE)	Type Series	Qmax. [gpm]	Qmax. [l/min]	Flow Info	Pmax. [psi]	Pmax. [bar]	Pressure Info	Cavity	Threaded connection	Datasheet EN
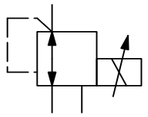		NG 04		DDRRZ-7080...	2.75	10	c)	3000	210	*)	AGS	M4	400-P-590111-en
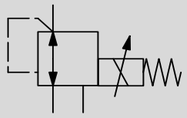		NG 04		DRDR-7-04-AG-...	3.25	12	c)	1400	100	*)	AG	M4	400-P-590151-en
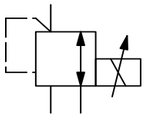		NG 05		DRDTA-7MQ...	3.75	15	c)	3600	250	*)	AM	3/4-16 UNF	400-P-591061-en
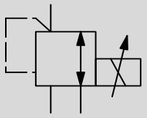		NG 05		DRDTA-7M...	6.5	25	c)	3600	250	*)	AM	3/4-16 UNF	400-P-591065-en
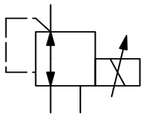		NG 04		DDRCZ-7011...	3.75	15	c)	1000	70	*)	AGA	M4	400-P-590501-en
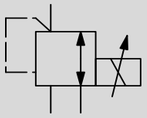		NG 04		DDRRZ-7011...	3.75	15	c)	1400	100	*)	AG	M4	400-P-590101-en
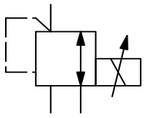		NG 05		DRDSA-7M	3.75	15	c)	3600	250	*)	AM	3/4-16 UNF	400-P-591051-en
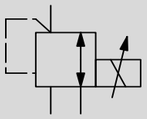		NG 05		DDRRY-7020...	5	20	c)	3000	210	*)	AG	M4	400-P-590121-en
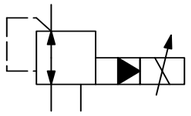		NG 05	SAE 08	EPRT-08	7	26	b)	3400	240	**)	C0830	3/4-16 UNF	520-P-110260-en

Symbol	Picture	Nominal Size	Size (SAE)	Type Series	Qmax. [gpm]	Qmax. [l/min]	Flow Info	Pmax. [psi]	Pmax. [bar]	Pressure Info	Cavity	Threaded connection	Datasheet EN
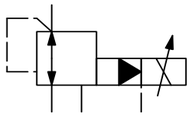		NG 10		DRVSA-7P...	31	120	c)	5000	350	*)	DP	M27 X 2	400-P-591101-en
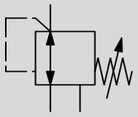		NG 05		DDRB-7M-2...	2.75	10	c)	3600	250	*)	AM	3/4-16 UNF	400-P-260501-en
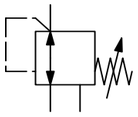		NG 05		DDRB-7M-4...	5	20	c)	3600	250	*)	AM	3/4-16 UNF	400-P-260501-en
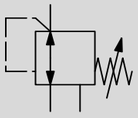		NG 10		DDRA-7L-10...	18	70	c)	4500	315	*)	DL	M27 X 2	400-P-260701-en
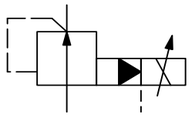		NG 10		DRPSA-5D-10...	31	120	c)	4500	315	*)	DD	M24 X 1.5	400-P-581501-en
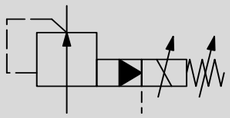		NG 10		DRPSA-5DG...	31	120	c)	4300	300	*)	DD	M24 X 1.5	400-P-581551-en
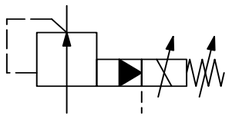		NG 16		DRPSB-5B...	66	250	c)	5000	350	*)	EB	M42 X 2	400-P-581701-en
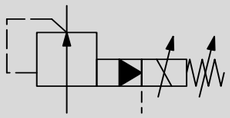		NG 10		WDRVPC-5...	36	140	c)	5000	350	*)	DD	M24 X 1.5	400-P-290501-en
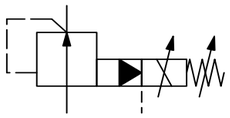		NG 16		WDRVPA-5...	66	250	c)	5000	350	*)	EB	M42 X 2	400-P-295401-en

Symbol	Picture	Nominal Size	Size (SAE)	Type Series	Qmax. [gpm]	Qmax. [l/min]	Flow Info	Pmax. [psi]	Pmax. [bar]	Pressure Info	Cavity	Threaded connection	Datasheet EN
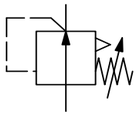		NG 05		DDRA-5L-05...	10	40	c)	4500	315	*)	AL	3/4-16 UNF	400-P-260301-en
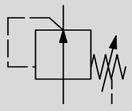		NG 08	SAE 10	DRSD5-8A...	10	40	c)	4500	315	*)	OA/C1025	7/8-14 UNF	400-P-260601-en
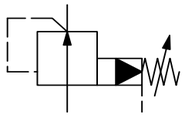		NG 10		DRPA-5-10-...	31	120	c)	5000	350	*)	DD	M24 X 1.5	400-P-280201-en
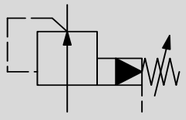		NG 16		DRPB-5...	66	250	c)	5000	350	*)	EB	M42 X 2	400-P-285401-en
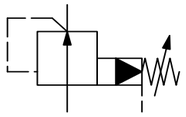		NG 08	SAE 10	PRPS-10	12	45	b)	5000	350	**)	C1030	7/8-14 UNF	520-P-050120-en
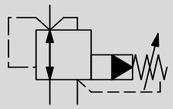		NG 08		PRRS-08	5.5	22	b)	5000	350	**)	C0830	3/4-16 UNF	520-P-050210-en
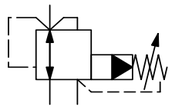		NG 10		PRRS-10	12	45	b)	5000	350	**)	C1030	7/8-14 UNF	520-P-050220-en
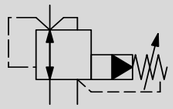		NG 12		PRRS-12	24	90	b)	5000	350	**)	C1230	1 1/16-12 UN	520-P-050230-en
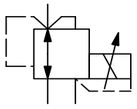	X	NG 08	SAE 10	EPRR-10	1	4	b)	5000	350	**)	C1030	7/8-14 UNF	520-P-110120-en

Symbol	Picture	Nominal Size	Size (SAE)	Type Series	Qmax. [gpm]	Qmax. [l/min]	Flow Info	Pmax. [psi]	Pmax. [bar]	Pressure Info	Cavity	Threaded connection	Datasheet EN
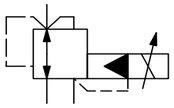	X	NG 08	SAE 10	EPRS-10	12	45	b)	5000	350	**)	C1030	7/8-14 UNF	520-P-110220-en
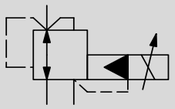	X	NG 10	SAE 12	EPRS-12	24	90	b)	5000	350	**)	C1230	1 1/16-12 UN	520-P-110230-en

Pressure Sequence Valves

→ Index

Symbol	Picture	Nominal Size	Size (SAE)	Type Series	Qmax. [gpm]	Qmax. [l/min]	Flow Info	Pmax. [psi]	Pmax. [bar]	Pressure Info	Cavity	Threaded connection	Datasheet EN
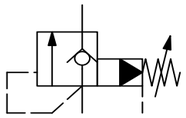		NG 08	SAE 10	PSVP-10	20	75	b)	5000	350	**)	C1025	7/8-14 UNF	520-P-060720-en
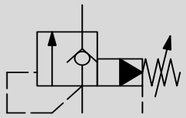	X	NG 08	SAE 10	HLSV-10	20	75	b)	5000	350	**)	C1025	7/8-14 UNF	520-P-060220-en
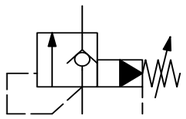		NG 08	SAE 10	HLSS-10	20	75	b)	5000	350	**)	C1025	7/8-14 UNF	520-P-060120-en
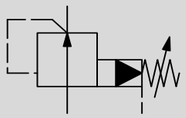	X	NG 05	SAE 08	PSXS-08	5.5	22	b)	5000	350	**)	C0830	3/4-16 UNF	520-P-060310-en
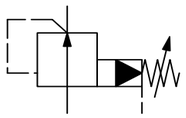	X	NG 08	SAE 10	PSXS-10	12	45	b)	5000	350	**)	C1030	7/8-14 UNF	520-P-060320-en
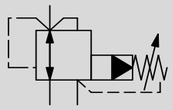	X	NG 05	SAE 08	PSOS-08	5.5	22	b)	5000	350	**)	C0830	3/4-16 UNF	520-P-060410-en
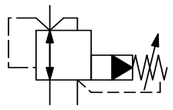	X	NG 08	SAE 10	PSOS-10	12	45	b)	5000	350	**)	C1030	7/8-14 UNF	520-P-060420-en
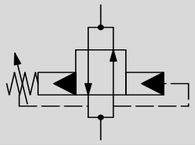	X	NG 05	SAE 08	PSCS-08	5.5	22	b)	5000	350	**)	C0830	3/4-16 UNF	520-P-060510-en
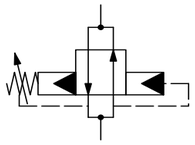	X	NG 08	SAE 10	PSCS-10	12	45	b)	5000	350	**)	C1030	7/8-14 UNF	520-P-060520-en

Symbol	Picture	Nominal Size	Size (SAE)	Type Series	Qmax. [gpm]	Qmax. [l/min]	Flow Info	Pmax. [psi]	Pmax. [bar]	Pressure Info	Cavity	Threaded connection	Datasheet EN
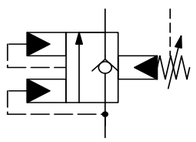	X	NG 08	SAE 10	PBVP-10	20	75	b)	5000	350	**)	C1025	7/8-14 UNF	520-P-061120-en
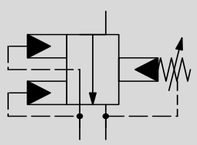	X	NG 05	SAE 08	BSXS-08	5.5	22	b)	5000	350	**)	C0830	3/4-16 UNF	520-P-061310-en
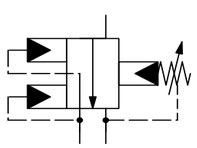	X	NG 08	SAE 10	BSXS-10	12	45	b)	5000	350	**)	C1030	7/8-14 UNF	520-P-061320-en
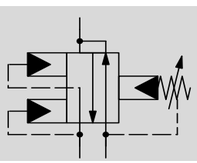		NG 05	SAE 08	BSOS-08	5.5	22	b)	5000	350	**)	C0830	3/4-16 UNF	520-P-061410-en
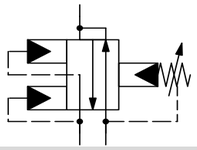	X	NG 08	SAE 10	BSOS-10	12	45	b)	5000	350	**)	C1030	7/8-14 UNF	520-P-061420-en
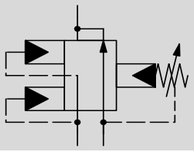		NG 05	SAE 08	BSCS-08	5.5	22	b)	5000	350	**)	C0830	3/4-16 UNF	520-P-061510-en
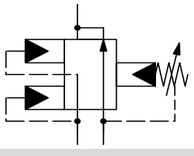	X	NG 08	SAE 10	BSCS-10	12	45	b)	5000	350	**)	C1030	7/8-14 UNF	520-P-061520-en
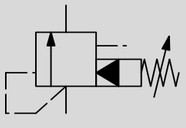		NG 05	SAE 08	LCEF-08-A	10	37	b)	5000	350	**)	C0825	3/4-16 UNF	520-P-070110-en
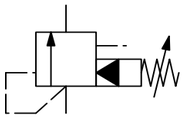		NG 08	SAE 10	LCEF-10-A	20	75	b)	5000	350	**)	C1025	7/8-14 UNF	520-P-070120-en

Symbol	Picture	Nominal Size	Size (SAE)	Type Series	Qmax. [gpm]	Qmax. [l/min]	Flow Info	Pmax. [psi]	Pmax. [bar]	Pressure Info	Cavity	Threaded connection	Datasheet EN
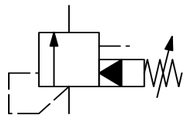		NG 10	SAE 12	LCEF-12-A	36	135	b)	5000	350	**)	C1225	1 1/16-12 UN	520-P-070130-en
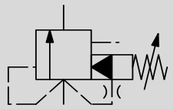	X	NG 05	SAE 08	LCEF-08-C	10	37	b)	5000	350	**)	C0825	3/4-16 UNF	520-P-070310-en
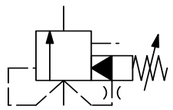		NG 08	SAE 10	LCEF-10-C	20	75	b)	5000	350	**)	C1025	7/8-14 UNF	520-P-070320-en
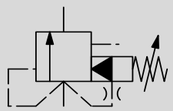		NG 10	SAE 12	LCEF-12-C	36	135	b)	5000	350	**)	C1225	1 1/16-12 UN	520-P-070330-en
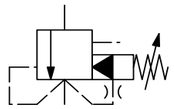	X	NG 05	SAE 08	LCEF-08-D	10	37	b)	5000	350	**)	C0825	3/4-16 UNF	520-P-070410-en
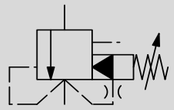		NG 08	SAE 10	LCEF-10-D	20	75	b)	5000	350	**)	C1025	7/8-14 UNF	520-P-070420-en
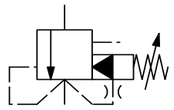		NG 10	SAE 12	LCEF-12-D	36	135	b)	5000	350	**)	C1225	1 1/16-12 UN	520-P-070430-en
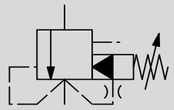		NG 05	SAE 08	LCEF-08-F	10	37	b)	5000	350	**)	C0825	3/4-16 UNF	520-P-070610-en
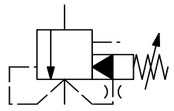		NG 08	SAE 10	LCEF-10-F	20	75	b)	5000	350	**)	C1025	7/8-14 UNF	520-P-070620-en

Symbol	Picture	Nominal Size	Size (SAE)	Type Series	Qmax. [gpm]	Qmax. [l/min]	Flow Info	Pmax. [psi]	Pmax. [bar]	Pressure Info	Cavity	Threaded connection	Datasheet EN
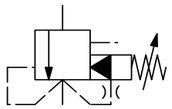		NG 10	SAE 12	LCEF-12-F	36	135	b)	5000	350	**)	C1225	1 1/16-12 UN	520-P-070630-en

Pressure Compensators / Logic Elements

→ Index

Symbol	Picture	Nominal Size	Size (SAE)	Type Series	Qmax. [gpm]	Qmax. [l/min]	Flow Info	Pmax. [psi]	Pmax. [bar]	Pressure Info	Cavity	Threaded connection	Datasheet EN
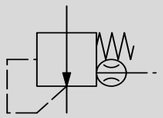		NG 10		DWDPB-5D...	21	80	c)	5000	350	*)	DD	M24 X 1.5	400-P-330501-en
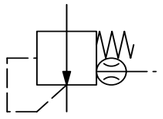		NG 16		DWDPA-5B...	66	250	c)	6000	420	*)	EB	M42 X 2	400-P-330801-en
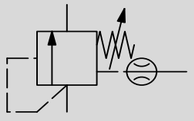		NG 10		DWDPB-2D...	36	140	c)	5000	350	*)	DD	M24 X 1.5	400-P-330101-en
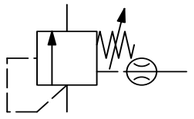		NG 16		DWDPA-2B...	92	350	c)	6000	420	*)	EB	M42 X 2	400-P-330701-en
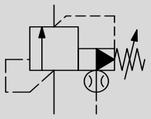		NG 10		DWVPA / Z-2...	36	140	c)	4500	315	*)	DD	M24 X 1.5	400-P-330201-en
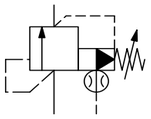		NG 16		DWVPA / Y / Z-2B...	92	350	c)	6000	420	*)	EB	M42 X 2	400-P-330711-en
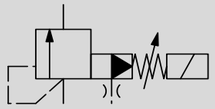		NG 10		WDWVP-2-O-10-DD-...	36	140	c)	5000	350	*)	DD	M24 X 1.5	400-P-331101-en
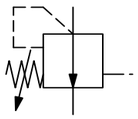		NG 05	SAE 08	PCEI-08	5.5	22	b)	5000	350	**)	C0830	3/4-16 UNF	520-P-071110-en
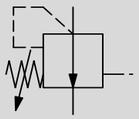		NG 08	SAE 10	PCEI-10	10	37	b)	5000	350	**)	C1030	7/8-14 UNF	520-P-071120-en

Symbol	Picture	Nominal Size	Size (SAE)	Type Series	Qmax. [gpm]	Qmax. [l/min]	Flow Info	Pmax. [psi]	Pmax. [bar]	Pressure Info	Cavity	Threaded connection	Datasheet EN
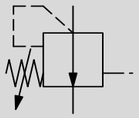		NG 10	SAE 12	PCEI-12		90.0	b)	5000	350	**)	C1230	1 1/16-12 UN	520-P-071130-en
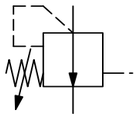		NG 12	SAE 16	PCEI-16	36	135	b)	5000	350	**)	C1630	1 5/16-12 UN	520-P-071140-en
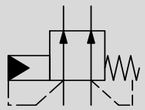		NG 05	SAE 08	PCEB-08	8	30	b)	5000	350	**)	C0840	3/4-16 UNF	520-P-071510-en
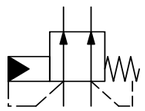		NG 08	SAE 10	PCEB-10	18	68	b)	5000	350	**)	C1040	7/8-14 UNF	520-P-071520-en
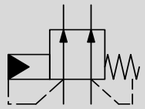		NG 10	SAE 12	PCEB-12	31	120	b)	5000	350	**)	C1240	1 1/16-12 UN	520-P-071530-en
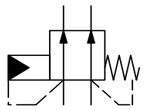	X	NG 12	SAE 16	PCEB-16	36	135	b)	5000	350	**)	C1640	1 5/16-12 UN	520-P-071540-en

Rapid Traverse Pressure-Control Cartridge

→ Index

Symbol	Picture	Nominal Size	Size (SAE)	Type Series	Qmax. [gpm]	Qmax. [l/min]	Flow Info	Pmax. [psi]	Pmax. [bar]	Pressure Info	Cavity	Threaded connection	Datasheet EN
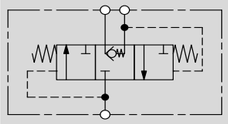		NG 16	SAE 10	EGP 20-G...	66	250	d)	5000	350	*)	see Datasheet	M42 X 2	300-P-9050096-en

Stack Mounting Pressure Relief Valves (manual adjuster)

→ Index

Symbol	Picture	Nominal Size	Size (SAE)	Type Series	Qmax. [gpm]	Qmax. [l/min]	Flow Info	Pmax. [psi]	Pmax. [bar]	Pressure Info	Cavity	Threaded connection	Datasheet EN
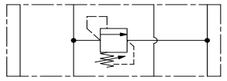		NG 04		SDDA-_-4	6.5	25	c)	3600	250	*)	ISO 4401-02-01	M5	400-P-300201-en
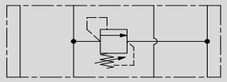		NG 06		SDDB-_-6	21	80	c)	5000	350	*)	ISO 4401-03-02	M5	400-P-302101-en
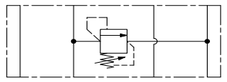		NG 10		SDDB-10	26	100	c)	5000	350	*)	ISO 4401-05-04	M6	400-P-305101-en
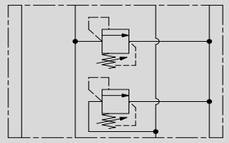		NG 04		SDDA-__-4	6.5	25	c)	3600	250	*)	ISO 4401-02-01	M5	400-P-300201-en
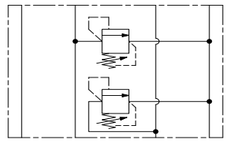	X	NG 06		SDDB-__-6	21	80	c)	5000	350	*)	ISO 4401-03-02	M5	400-P-302101-en
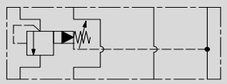		NG 06		SDVB-6	21	80	c)	5000	350	*)	ISO 4401-03-02	M5	400-P-303101-en
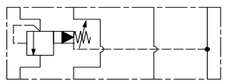		NG 10		SDVB-10	36	140	c)	5000	350	*)	ISO 4401-05-04	M6	400-P-306101-en
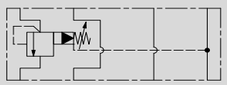	X	NG 16		SDVA-16	79	300	c)	5000	350	*)	ISO 4401-07-07	M10	400-P-308101-en

Stack Mounting Pressure Relief Valves (solenoid actuated)

→ Index

Symbol	Picture	Nominal Size	Size (SAE)	Type Series	Qmax. [gpm]	Qmax. [l/min]	Flow Info	Pmax. [psi]	Pmax. [bar]	Pressure Info	Cavity	Threaded connection	Datasheet EN
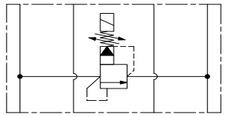		NG 06		SWUVP_D	21	80	c)	5000	350	*)	ISO 4401-03-02	M5	400-P-304101-en
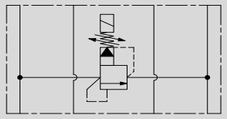		NG 10		SWUVP_D	36	140	c)	5000	350	*)	ISO 4401-05-04	M6	400-P-307101-en
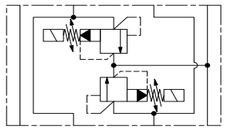	X	NG 06		SWUVP__D	21	80	c)	5000	350	*)	ISO 4401-03-02	M5	400-P-304101-en
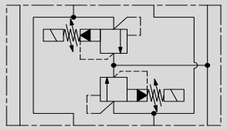	X	NG 10		SWUVP_D	36	140	c)	5000	350	*)	ISO 4401-05-04	M6	400-P-307101-en

Stack Mounting Pressure Relief Valves (proportional)

→ Index

Symbol	Picture	Nominal Size	Size (SAE)	Type Series	Qmax. [gpm]	Qmax. [l/min]	Flow Info	Pmax. [psi]	Pmax. [bar]	Pressure Info	Cavity	Threaded connection	Datasheet EN
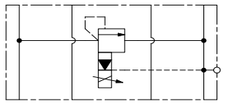	X	NG 06		SDVPSA-3	16	60	c)	4500	315	*)	ISO 4401-03-02	M5	400-P-593051-en

Stack Mounting Pressure-Reducing Valves (manual adjuster)

→ Index

Symbol	Picture	Nominal Size	Size (SAE)	Type Series	Qmax. [gpm]	Qmax. [l/min]	Flow Info	Pmax. [psi]	Pmax. [bar]	Pressure Info	Cavity	Threaded connection	Datasheet EN
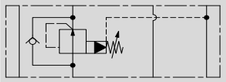		NG 06		SDRB	21	80	c)	5000	350	*)	ISO 4401-03-02	M5	400-P-303501-en
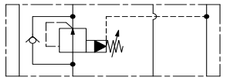		NG 10		SDRB	26	100	c)	5000	350	*)	ISO 4401-05-04	M6	400-P-306501-en
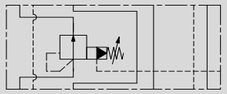	X	NG 16		SDRA	66	250	c)	5000	350	*)	ISO 4401-07-07	M10	400-P-308501-en

Stack Mounting Pressure-Reducing Valves (solenoid actuated)

→ Index

Symbol	Picture	Nominal Size	Size (SAE)	Type Series	Qmax. [gpm]	Qmax. [l/min]	Flow Info	Pmax. [psi]	Pmax. [bar]	Pressure Info	Cavity	Threaded connection	Datasheet EN
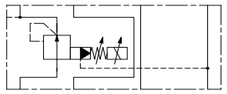		NG 06		SWDRVPD	21	80	c)	5000	350	*)	ISO 4401-03-02	M5	400-P-304501-en
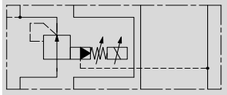		NG 10		SWDRVPD	36	140	c)	5000	350	*)	ISO 4401-05-04	M6	400-P-307501-en

Stack Mounting Pressure-Reducing Valves (proportional)

→ Index

Symbol	Picture	Nominal Size	Size (SAE)	Type Series	Qmax. [gpm]	Qmax. [l/min]	Flow Info	Pmax. [psi]	Pmax. [bar]	Pressure Info	Cavity	Threaded connection	Datasheet EN
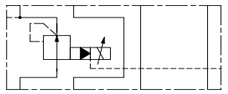	X	NG 06		SDRPSB-5	16	60	c)	4500	315	*)	ISO 4401-03-02	M5	400-P-593451-en
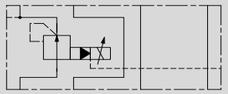	X	NG 10		SDRPSA-5	31	120	c)	4500	315	*)	ISO 4401-05-04	M6	400-P-593501-en
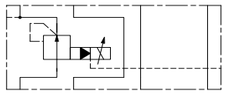		NG 16		SDRPSA-5	66	250	c)	5000	350	*)	ISO 4401-07-07	M10	400-P-593551-en

Stack Mounting 3-Way Pressure-Reducing Valves (manual adjuster)

→ Index

Symbol	Picture	Nominal Size	Size (SAE)	Type Series	Qmax. [gpm]	Qmax. [l/min]	Flow Info	Pmax. [psi]	Pmax. [bar]	Pressure Info	Cavity	Threaded connection	Datasheet EN
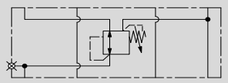		NG 04		SDRA..4	6.5	25	c)	3600	250	*)	ISO 4401-02-01	M5	400-P-300501-en
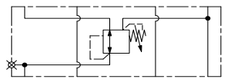		NG 06		SDDRA-7	16	60	c)	4500	315	*)	ISO 4401-03-02	M5	400-P-317101-en
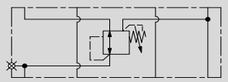		NG 10		SDDRA-7	18	70	c)	4500	315	*)	ISO 4401-05-04	M6	400-P-326101-en

Stack Mounting 3-Way Pressure-Reducing Valves (proportional)

→ Index

Symbol	Picture	Nominal Size	Size (SAE)	Type Series	Qmax. [gpm]	Qmax. [l/min]	Flow Info	Pmax. [psi]	Pmax. [bar]	Pressure Info	Cavity	Threaded connection	Datasheet EN
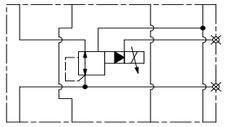	X	NG 06		SDRVSA-7	16	60	c)	5000	350	*)	ISO 4401-03-02	M5	400-P-595102-en
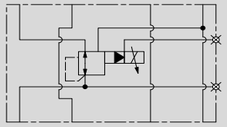	X	NG 10		SDRVSA-7	31	120	c)	5000	350	*)	ISO 4401-05-04	M6	400-P-596101-en

Stack Mounting Sequence Valves (manual actuating)

→ Index

Symbol	Picture	Nominal Size	Size (SAE)	Type Series	Qmax. [gpm]	Qmax. [l/min]	Flow Info	Pmax. [psi]	Pmax. [bar]	Pressure Info	Cavity	Threaded connection	Datasheet EN
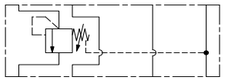		NG 06		SDDB-3	21	80	c)	5000	350	*)	ISO 4401-03-02	M5	400-P-302201-en
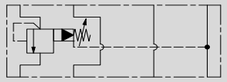		NG 06		SDVB-3	21	80	c)	5000	350	*)	ISO 4401-03-02	M5	400-P-303201-en
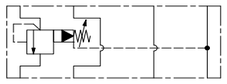		NG 10		SDDB-3	26	100	c)	5000	350	*)	ISO 4401-05-04	M6	400-P-305201-en
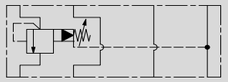		NG 10		SDVB-3	36	140	c)	5000	350	*)	ISO 4401-05-04	M6	400-P-306201-en

Stack Mounting Cross-Line Relief Valves (manual adjuster)

→ Index

Symbol	Picture	Nominal Size	Size (SAE)	Type Series	Qmax. [gpm]	Qmax. [l/min]	Flow Info	Pmax. [psi]	Pmax. [bar]	Pressure Info	Cavity	Threaded connection	Datasheet EN
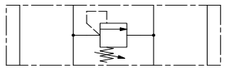		NG 04		SDDA-...S	6.5	25	c)	3600	250	*)	ISO 4401-02-01	M5	400-P-300101-en
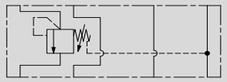		NG 06		SDDB-...S	21	80	c)	5000	350	*)	ISO 4401-03-02	M5	400-P-302301-en
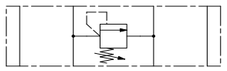		NG 06		SDVB-...S	21	80	c)	5000	350	*)	ISO 4401-03-02	M5	400-P-303301-en
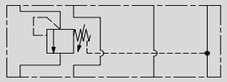		NG 10		SDDB-...S	26	100	c)	5000	350	*)	ISO 4401-05-04	M6	400-P-305301-en

Stack Mounting Hydrostat Valves (manual adjuster)

→ Index

Symbol	Picture	Nominal Size	Size (SAE)	Type Series	Qmax. [gpm]	Qmax. [l/min]	Flow Info	Pmax. [psi]	Pmax. [bar]	Pressure Info	Cavity	Threaded connection	Datasheet EN
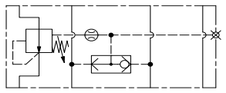		NG 06		SDWDPB-2D	8	30	c)	4500	315	*)	ISO 4401-03-02	M5	400-P-335101-en
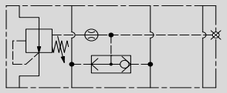		NG 10		SDWVPB .. / Z	16	60	c)	4500	315	*)	ISO 4401-05-04	M6	400-P-336201-en
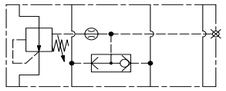		NG 10		SDWDPB-5D	31	120	c)	4500	315	*)	ISO 4401-05-04	M6	400-P-336501-en

Stack Mounting Counterbalance Valves (manual adjuster)

→ Index

Symbol	Picture	Nominal Size	Size (SAE)	Type Series	Qmax. [gpm]	Qmax. [l/min]	Flow Info	Pmax. [psi]	Pmax. [bar]	Pressure Info	Cavity	Threaded connection	Datasheet EN
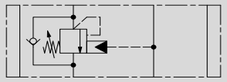		NG 06		SNSA	16	60	c)	5000	350	*)	ISO 4401-03-02	M5	400-P-360101-en
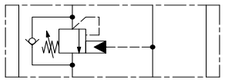		NG 10		SNSA	31	120	c)	5000	350	*)	ISO 4401-05-04	M6	400-P-361101-en

Safety Valves

Counter Balance Valves

→ Index

Symbol	Picture	Nominal Size	Size (SAE)	Type Series	Qmax. [gpm]	Qmax. [l/min]	Flow Info	Pmax. [psi]	Pmax. [bar]	Pressure Info	Cavity	Threaded connection	Datasheet EN
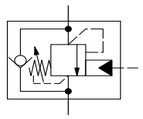	X	NG 05	SAE 08	CBPA-08	10	37	b)	5000	350	**)	C0825	3/4-16 UNF	520-P-080510-en
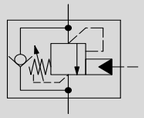		NG 08	SAE 10	CBPA-10	20	75	b)	5000	350	**)	C1025	7/8-14 UNF	520-P-080520-en
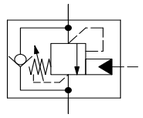		NG 10	SAE 12	CBPA-12	34	130	b)	4000	280	**)	C1225	1 1/16-12 UN	520-P-080530-en
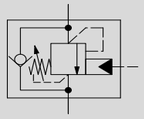		NG 10		CBPA-20M	20	75	b)	5000	350	**)	SUN # T-11A	M20 X1.5	520-P-081120-en
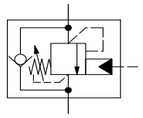		NG 08	SAE 10	CBPP-10	15	56	b)	5000	350	**)	C1025	7/8-14 UNF	520-P-081520-en
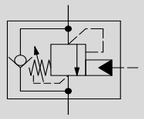		NG 05	SAE 08	CBPP-20M	15	56	b)	5000	350	**)	SUN # T-11A	M20 X1.5	520-P-081520-en
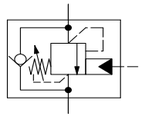	X	NG 05	SAE 08	CBPS-08	10	37	b)	5000	350	**)	C0825	3/4-16 UNF	520-P-080710-en
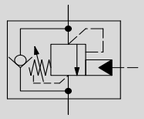	X	NG 08	SAE 10	CBPS-10	20	75	b)	5000	350	**)	C1025	7/8-14 UNF	520-P-080720-en

Symbol	Picture	Nominal Size	Size (SAE)	Type Series	Qmax. [gpm]	Qmax. [l/min]	Flow Info	Pmax. [psi]	Pmax. [bar]	Pressure Info	Cavity	Threaded connection	Datasheet EN
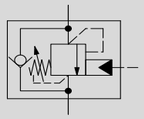	X	NG 10	SAE 12	CBPS-12	34	130	b)	4000	280	**)	C1225	1 1/16-12 UN	520-P-080730-en
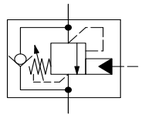	X	NG 08	SAE 10	CBPS-20M	20	75	b)	5000	350	**)	SUN # T-11A	M20 X1.5	520-P-081220-en
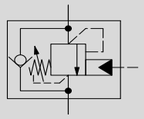	X	NG 05	SAE 08	CBPG-08	10	37	b)	5000	350	**)	C0825	3/4-16 UNF	520-P-080910-en
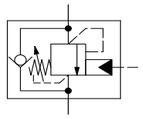	X	NG 08	SAE 10	CBPG-10	20	75	b)	5000	350	**)	C1025	7/8-14 UNF	520-P-080920-en
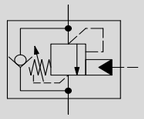	X	NG 10	SAE 12	CBPG-12	34	130	b)	4000	280	**)	C1225	1 1/16-12 UN	520-P-080930-en
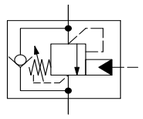	X	NG 08	SAE 10	CBPG-T-11A	20	75	b)	5000	350	**)	SUN # T-11A	M20 X1.5	520-P-081320-en
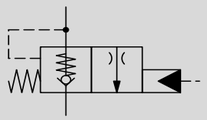		NG 05	SAE 08	ERV 8-A-C-PH-...	13	50	b)	6400	450	**)	see Datasheet	M30 X 1.5	300-P-9050115-en

Load Control Valves

→ Index

Symbol	Picture	Nominal Size	Size (SAE)	Type Series	Qmax. [gpm]	Qmax. [l/min]	Flow Info	Pmax. [psi]	Pmax. [bar]	Pressure Info	Cavity	Threaded connection	Datasheet EN
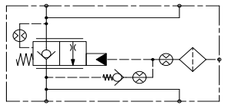		NG 06		BBV 6 C	13	50	d)	6000	420	*)	see Datasheet	M42 X 1.5	300-P-9050008-en
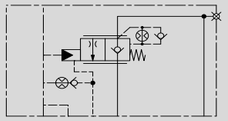		NG 20		CINDY 20-C	92	350	d)	6000	420	*)	see Datasheet	M8	300-P-9050110-en
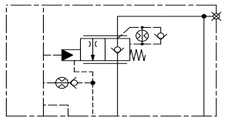		NG 25		CINDY 25-C	130	500	d)	6000	420	*)	see Datasheet	M8	300-P-9050111-en
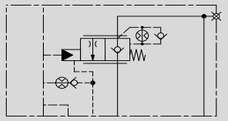		NG 40		CINDY 40-C	345	1300	d)	5000	350	*)	see Datasheet	see Datasheet	300-P-9050099-en

Threaded Port Bodies

Threaded Port Bodies (2 Ports)

→ Index

Symbol	Picture	Nominal Size	Size (SAE)	Type Series	Qmax. [gpm]	Qmax. [l/min]	Flow Info	Pmax. [psi]	Pmax. [bar]	Pressure Info	Cavity	Threaded connection	Datasheet EN
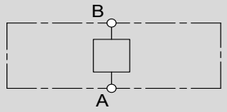		NG 10		DC-12					450		DC	G 1/2"	400-P-740101-en
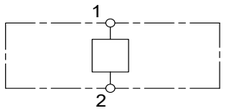		NG 05		GBH-38					420		BH/C0820	G 3/8"	400-P-738571-en
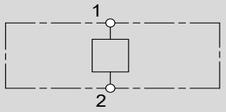		NG 06		GABA					315		AB	G 3/8"	400-P-730111-en
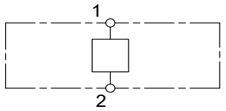		NG 06		GALA					420		AL	G 3/8"	400-P-720101-en
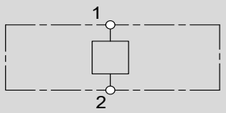		NG 06		GALMA					350		ALM	G 3/8"	400-P-720105-en
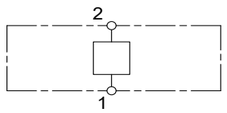		NG 06		GAYA					250		AY	G 3/8"	400-P-720231-en
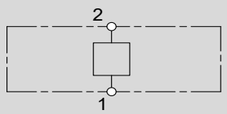		NG 08		GAX-12					420		AX/C1020	G 1/2"	400-P-738101-en
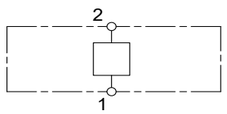		NG 10		GCDHA					350		DH	G 3/4"	400-P-740161-en

Symbol	Picture	Nominal Size	Size (SAE)	Type Series	Qmax. [gpm]	Qmax. [l/min]	Flow Info	Pmax. [psi]	Pmax. [bar]	Pressure Info	Cavity	Threaded connection	Datasheet EN
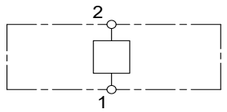		NG 10		GERA					420		ER	G 3/4"	400-P-750121-en
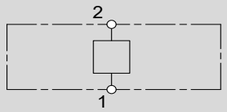		NG 10		GHA-34					420		HA/C1220	G 3/4"	400-P-740501-en
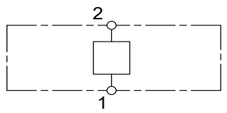		NG 10		GHF-34					420		HF/C1220A	G 3/4"	400-P-740551-en
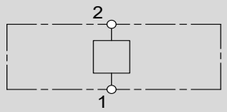		NG 16		GEFA					350		EF	G 1"	400-P-750131-en
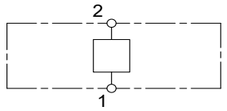		NG 16		GLA-11					420		LA/C1620	G 1"	400-P-742101-en
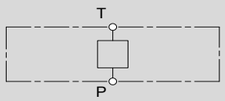		NG 10		GCUA					210		DU	G 3/4"	400-P-740251-en
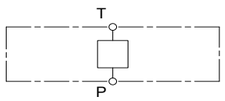		NG 16		GEUA					210		KTU	G 1"	400-P-750151-en

Threaded Port Bodies (3 Ports)

→ Index

Symbol	Picture	Nominal Size	Size (SAE)	Type Series	Qmax. [gpm]	Qmax. [l/min]	Flow Info	Pmax. [psi]	Pmax. [bar]	Pressure Info	Cavity	Threaded connection	Datasheet EN
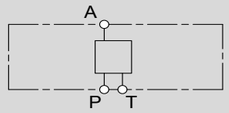		NG 06		GAAA					210		AG	G 1/4"	400-P-712101-en
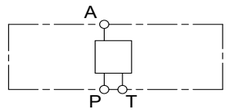		NG 06		GAAZ					210		AGS	G 1/4"	400-P-712105-en
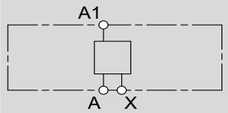		NG 10		RC-12					350		RC	G 1/2"	400-P-740201-en
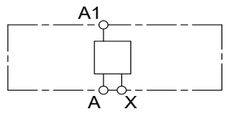		NG 16		GEAA					350		ECY	G 1"	400-P-750201-en
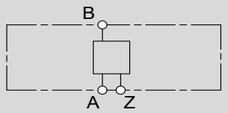		NG 10		DD-12					450		DD	G 1/2"	400-P-740111-en
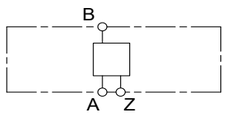		NG 10		DDY-12					450		DD	G 1/2"	400-P-740112-en
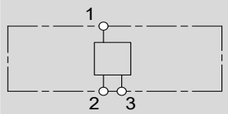		NG 06		GADA					315		AD	G 3/8"	400-P-730121-en
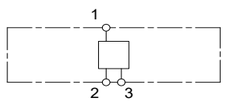		NG 10		GCLA					315		DL	G 3/4"	400-P-740121-en
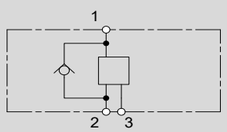		NG 10		GCLAA					315		DL	G 3/4"	400-P-740122-en

Symbol	Picture	Nominal Size	Size (SAE)	Type Series	Qmax. [gpm]	Qmax. [l/min]	Flow Info	Pmax. [psi]	Pmax. [bar]	Pressure Info	Cavity	Threaded connection	Datasheet EN
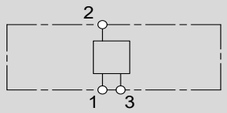		NG 06		GAMA					420		AM	G 3/8"	400-P-720111-en
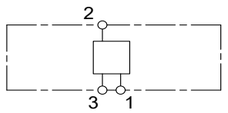		NG 08		GOA-12					420		OA/C1025	G 1/2"	400-P-738111-en
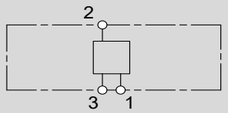		NG 08		GAU-12					420		AU/C1030	G 1/2"	400-P-738121-en
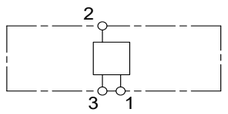		NG 10		GCBA					350		DN	G 1"	400-P-740141-en
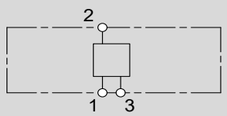		NG 16		GEBAA					420		EB	G 1"	400-P-750115-en
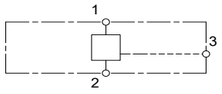		NG 12		GBG-12					420		BG	G 1/2"	400-P-738561-en
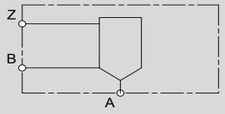		NG 10		GADJA					420		DJ	G 3/4"	400-P-740131-en

Threaded Port Bodies (4 Ports)

→ Index

Symbol	Picture	Nominal Size	Size (SAE)	Type Series	Qmax. [gpm]	Qmax. [l/min]	Flow Info	Pmax. [psi]	Pmax. [bar]	Pressure Info	Cavity	Threaded connection	Datasheet EN
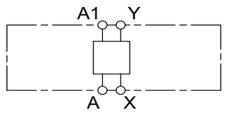		NG 10		GCRA					350		RCY	G 1/2"	400-P-740211-en
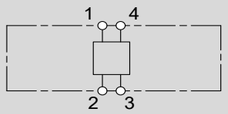		NG 10		GCPA					350		DP	G 1/2"	400-P-740171-en
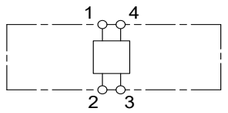		NG 10		GCPAA					350		DP	G 1/2"	400-P-740172-en
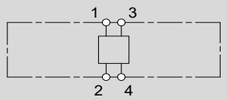		NG 06		GAT-12					420		AT/C1040	G 1/2"	400-P-738131-en
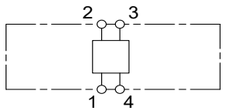		NG 06		GANA					420		AN	G 3/8"	400-P-720121-en

Fidar Industrial Group

BUCHER hydraulics
WWW.SUMY.IR

General information
Cavity

Type series: C0820

Dimensions and sectional view

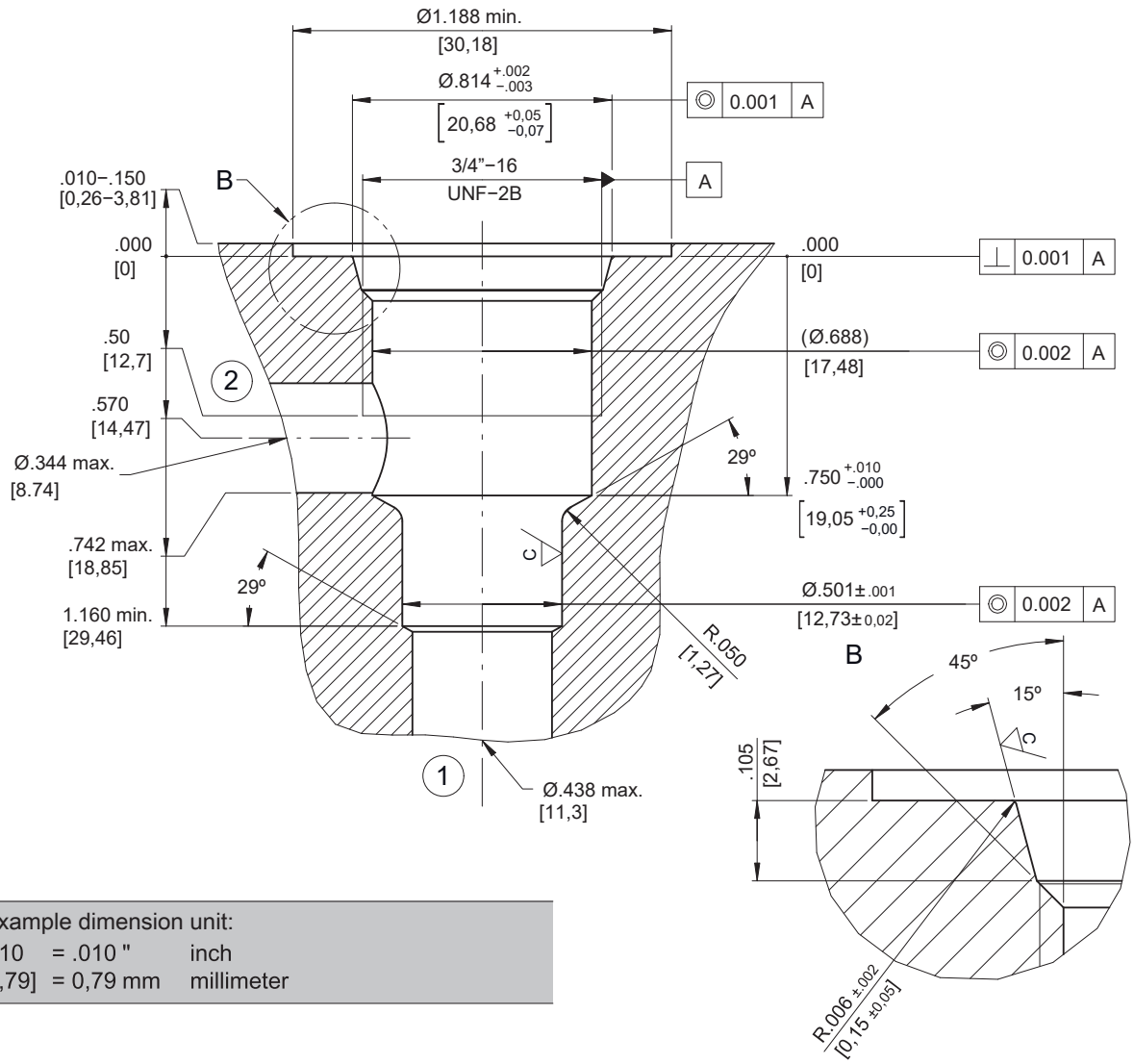

Example dimension unit:		
.010	= .010 "	inch
[0,79]	= 0,79 mm	millimeter

Dimension Tolerances	
Unless otherwise specified	
0.000	± .005″
0.00	± .010″
Angles	± 1/2°

Surface roughness		
Ra	C	D
	45 µin	125 µin
	(1.15 µm)	(3.2 µm)
	D Unless otherwise specified	

Installation information

ATTENTION!
You must maintain the specified positional and diametral tolerances. To ensure trouble-free operation of the screw-in cartridges, we strongly recommend that pilot drilling, boring, reaming and cavity thread-cutting are always performed in one setup.

NOTE!
Cavity type to factory standard.

NOTE!
We offer form tool sets for sale or hire. See data sheet 520-P-000050 for further information.

info.us@bucherhydraulics.com **www.bucherhydraulics.com**

© 2025 by Bucher Hydraulics Inc., Elgin, IL 60124, USA

All rights reserved.
Data is provided for the purpose of product description only, and must not be construed as warranted characteristics in the legal sense. The information does not relieve users from the duty of conducting their own evaluations and tests. Because the products are subject to continual improvement, we reserve the right to amend the product specifications contained in this catalogue.

BUCHER hydraulics
WWW.SUMY.IR

Lock valve
Check valve

Q_{max} = 37 l/min, p_{max} = 350 bar
poppet type, hydraulical operation
Type series: CVPF-08-...

- Screw-in cartridge valve
- For cavity C0820
- All external parts zinc plated, chromited (CrVI-free)
- Installation in threaded port body type B0820
- Wide selection of bias springs allows flexibility for back-pressure application

Description

This unit is a screw-in cartridge style, guided poppet, hydraulic check valve, for use as a blocking or load holding device for high pressure applications. This valve allows free flow from port 1 to port 2 and blocks flow from port 2 to port 1 or holding a load.

Symbol

Technical data

General characteristics	Description, value, unit
Function group	Lock valve
Function	Check valve
Design	Screw-in cartridge valve
Controls	hydraulical operation
Characteristic	poppet type
Construction size	NG 5 / SAE 08
Thread size	3/4-16 UNF-2A
Mounting attitude	unrestricted

General characteristics	Description, value, unit
Weight	0.07 kg
Cavity acc. factory standard	For cavity C0820
Tightening torque steel	50.5 Nm
Tightening torque aluminium	37.5 Nm
Tightening torque tolerance	± 5 %
Minimum ambient temperature	- 30 °C
Maximum ambient temperature	+ 120 °C
Surface protection	All external parts zinc plated, chromited (CrVI-free)
Sealing material	see ordering code
Seal kit order number	NBR: SKN-0821/ FKM: SKV-0821

Hydraulic characteristics	Description, value, unit
Maximum operating pressure	350 bar
Maximum flow rate	37 l/min
Flow direction	see symbol
Hydraulic fluid	All general purpose hydraulic fluids such as MIL-H-5606, SAE-#10, SAE-#20, etc.
Minimum fluid temperature	- 25 °C
Maximum fluid temperature	+ 80 °C
Viscosity range	10 ... 500 mm^2/s (cSt)
Recommended viscosity range	15 ... 250 mm^2/s (cSt)
Minimum fluid cleanliness (cleanlineless class according to ISO 4406:1999)	class 18/16/13
Internal leakage flow rate	5 drops/min maximum at 350 bar

Performance graphs

measured with oil viscosity 28.5 mm^2/s (cSt)

Δp = f (Q) Pressure drop-flow rate characteristic

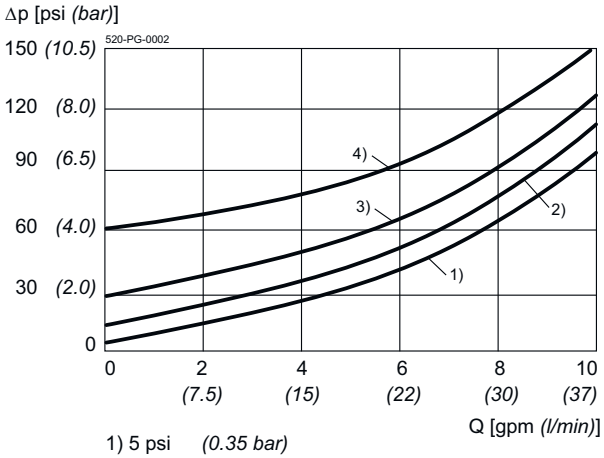

1) 5 psi *(0.35 bar)*
2) 15 psi *(1 bar)*
3) 30 psi *(2 bar)*
4) 60 psi *(4 bar)*

Dimensions and sectional view

Beispiel für die Masseinheit:
Example for the dimensional units:

.031	= 0.031"	inch
(0.79)	= 0.79 mm	millimeter

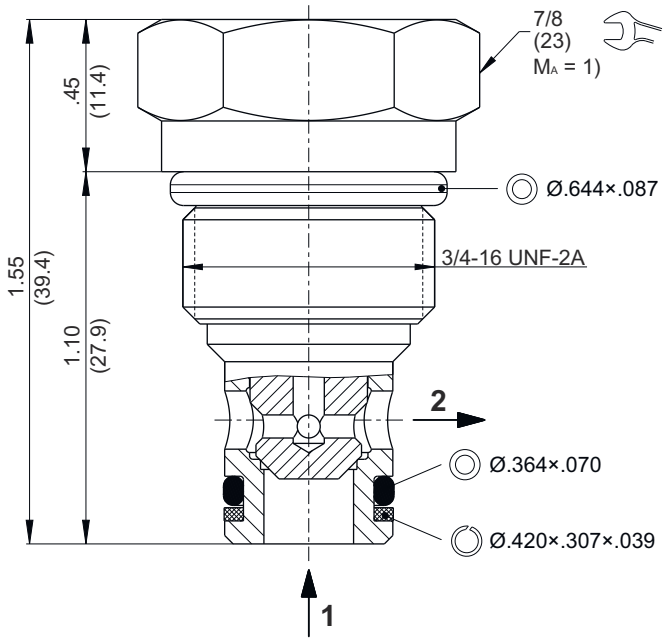

Installation information

ATTENTION!
Only qualified personnel with mechanical skills may carry out any maintenance work. Generally, the only work that should ever be undertaken is to check, and possibly replace, the seals. When changing seals, oil or grease the new seals thoroughly before fitting them.

NOTE!
1) When fitting the screw-in cartridge valve, use the specified tightening torque. The value can be found in the chapter "Technical data".

NOTE!
The seals are not available individually. The seal kit order number can be found in the chapter "Technical data".

Ordering code

z.B. CVPF - 08 - N - 0 - 005

CVPF = Federbelastetes Rückschlagventil
08 = Nennweite SAE 08 / NG 5
N = NBR (Nitril-Butadien-Kautschuk) *(Standard)*
V = FKM (Fluor-Kautschuk / VITON) Dichtungen *(Spezialdichtungen nach Rücksprache)*
0 = nur Einschraubventil
06TA = Gewindegehäusekörper Aluminium SAE #06 ports / #08 Anschlüsse
06TS = Gewindegehäusekörper Stahl SAE #06 ports / #08 Anschlüsse
005 = Öffnungsdruck 5 psi
015 = Öffnungsdruck 15 psi
030 = Öffnungsdruck 30 psi
060 = Öffnungsdruck 60 psi
120 = Öffnungsdruck 120 psi

005 = opening pressure 5 psi / 0.35 bar
015 = opening pressure 15 psi / 1 bar
030 = opening pressure 30 psi / 2 bar
060 = opening pressure 60 psi / 4 bar
100 = opening pressure 100 psi / 7 bar

Related data sheets

Reference	Description
520-P-000050	Form tools
520-P-000110	Cavity Cavity C0820
520-P-000111	Threaded port body B0820

info.us@bucherhydraulics.com **www.bucherhydraulics.com**

© 2024 by Bucher Hydraulics Inc., Elgin, IL 60124, USA

All rights reserved.
Data is provided for the purpose of product description only, and must not be construed as warranted characteristics in the legal sense. The information does not relieve users from the duty of conducting their own evaluations and tests. Because the products are subject to continual improvement, we reserve the right to amend the product specifications contained in this catalogue.

BUCHER hydraulics
WWW.SUMY.IR

Cavity Type C1020

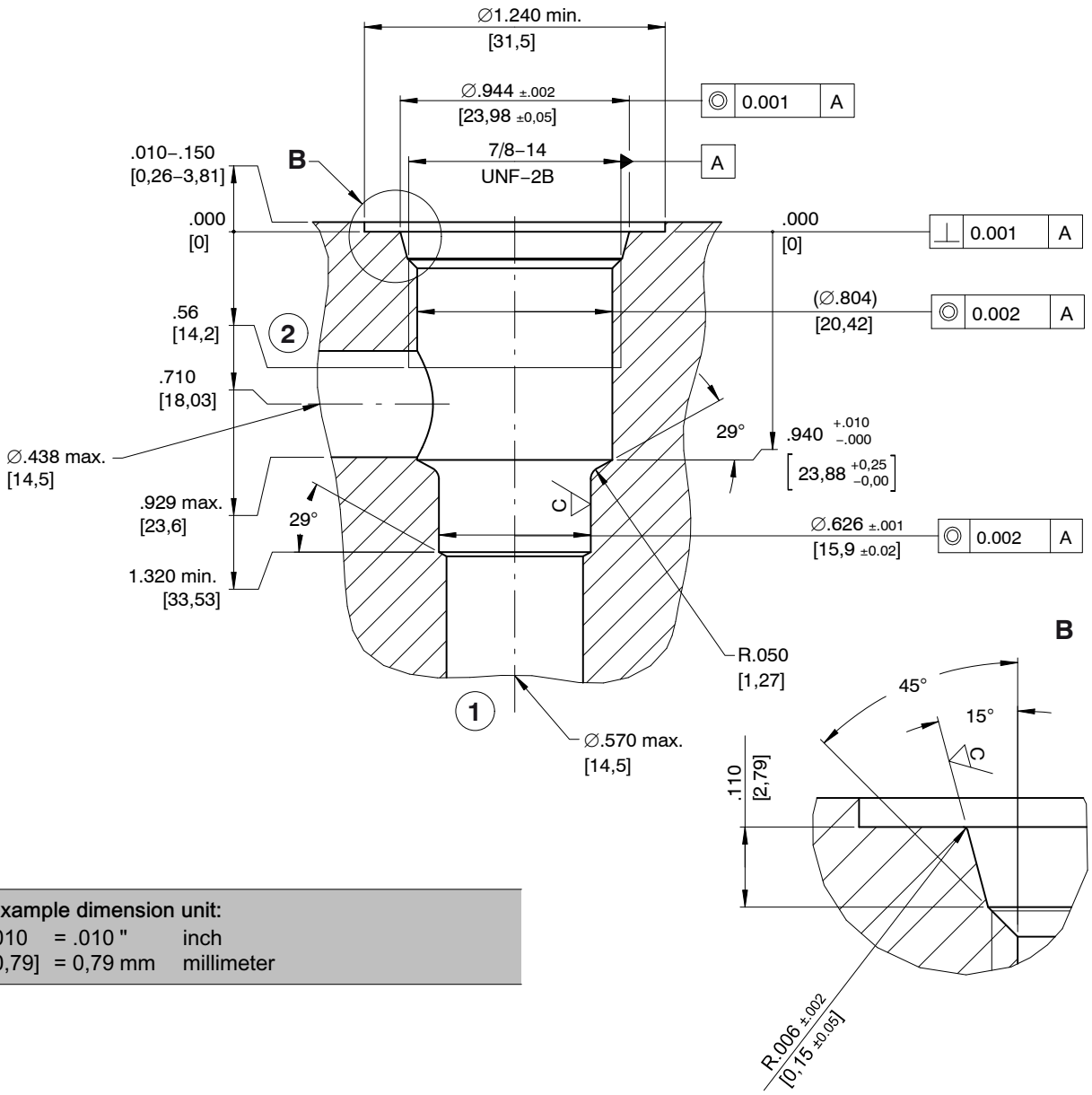

Example dimension unit:		
.010	= .010 "	inch
[0,79]	= 0,79 mm	millimeter

Dimension Tolerances	
Unless otherwise specified	
0.000	± .005″
0.00	± .010″
Angles	± 1/2°

Surface roughness		
Ra	C	D
	45 µin	125 µin
	(1.15 µm)	(3.2 µm)
	D Unless otherwise specified	

Reference: 520-P-000120-EN-01

WWW.SUMY.IR

1 Related data sheets

Reference	(Old no.)	Description
520-P-000050		The form-tool selling programme
520-P-000121	(0–012.1)	Line-mounting body, 10 Series – 2-way

info.el@bucherhydraulics.com www.bucherhydraulics.com/commoncavity

© 2016 by Bucher Hydraulics, Inc., 2545 Northwest Parkway, Elgin, Illinois 60124, USA
All rights reserved.
Data is provided for the purpose of product description only, and must not be construed as warranted characteristics in the legal sense. The information does not relieve users from the duty of conducting their own evaluations and tests. Because the products are subject to continual improvement, we reserve the right to amend the product specifications contained in this catalogue.

Classification: 430.Cavity.…

BUCHER hydraulics

WWW.SUMY.IR

Check valve
Spring loaded check

Q_{max} = 68 l/min, p_{max} = 350 bar
poppet type, hydraulical operation
Type series: CVFP-10-...

- Screw-in cartridge valve
- For cavity C1020
- All external parts zinc plated, chromited (CrVI-free)
- Installation in threaded port body type B1020
- Wide selection of bias springs allows flexibility for back-pressure application

Description

This unit is a screw-in cartridge style, guided poppet, hydraulic check valve, for use as a blocking or load holding device for high pressure applications. This valve allows free flow from port 1 to port 2 and blocks flow from port 2 to port 1 or holding a load.

Symbol

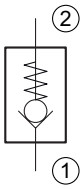

Technical data

General Characteristics	Description, value, unit
Function group	Check valve
Function	Spring loaded check
Design	Screw-in cartridge valve
Controls	hydraulical operation
Characteristic	poppet type
Construction size	SAE 10 / nominal size 8
Thread size	7/8-14 UNF-2A
Mounting attitude	unrestricted
Weight	0.12 kg
Cavity acc. factory standard	For cavity C1020
Tightening torque steel	77.5 Nm
Tightening torque aluminium	50.5 Nm
Tightening torque tolerance	± 5 %
Minimum ambient temperature	- 30 °C
Maximum ambient temperature	+ 120 °C
Surface protection	All external parts zinc plated, chromited (CrVI-free)
Available seal types	several seal types available, see ordering code
Seal kit order number	NBR: SKN-1021 / SKV-1021

Hydraulic Characteristics	Description, value, unit
Maximum operating pressure	350 bar
Maximum flow rate	68 l/min
Flow direction	see symbol
Hydraulic fluid	All general purpose hydraulic fluids such as MIL-H-5606, SAE-#10, SAE-#20, etc.
Minimum fluid temperature	- 25 °C
Maximum fluid temperature	+ 80 °C
Viscosity range	10 ... 500 mm^2/s (cSt)
Recommended viscosity range	15 ... 250 mm^2/s (cSt)
Minimum fluid cleanliness (cleanlineless class according to ISO 4406:1999)	class 18/16/13
Internal leakage flow rate	5 drops/min maximum at 350 bar

Performance graphs

measured with oil viscosity 28.5 mm²/s (cSt)

Δp = f (Q) Pressure drop-flow rate characteristic

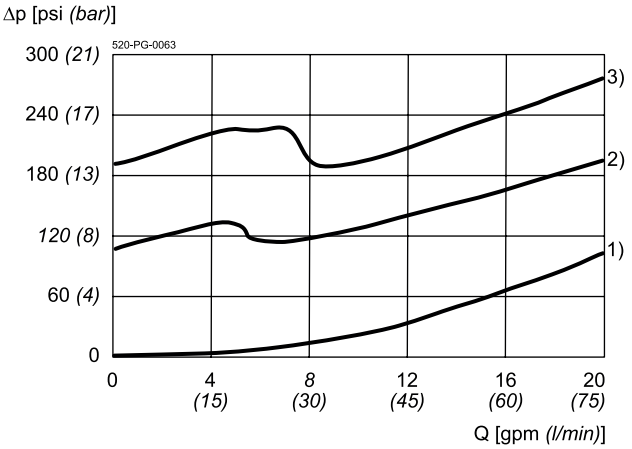

1) = p_N 5 psi *(0.35 bar)*
2) = p_N 120 psi *(8 bar)*
3) = p_N 210 psi (14.*5 bar)*

Dimensions and sectional view

Beispiel für die Masseinheit:
Example for the dimensional units:

.031 = 0.031" inch
(0.79) = 0.79 mm millimeter

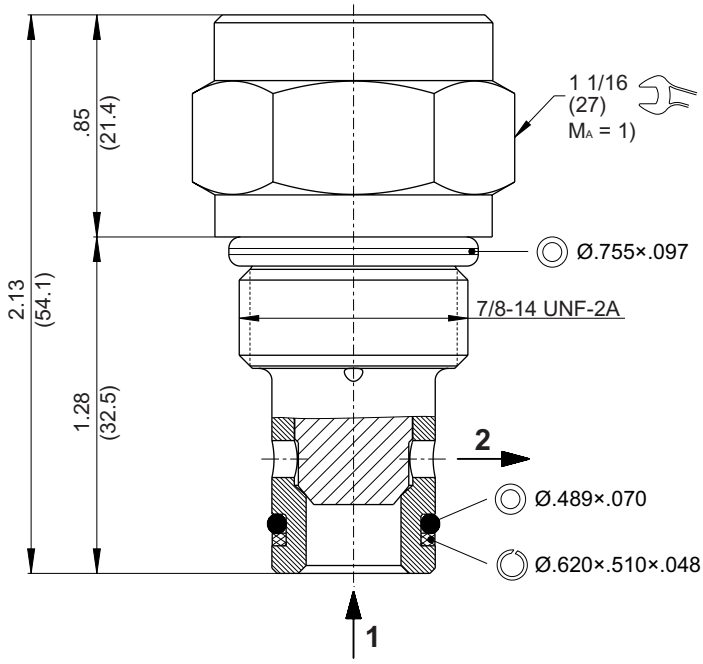

Installation information

ATTENTION!
Only qualified personnel with mechanical skills may carry out any maintenance work. Generally, the only work that should ever be undertaken is to check, and possibly replace, the seals. When changing seals, oil or grease the new seals thoroughly before fitting them.

NOTE!
The seals are not available individually. The seal kit order number can be found in the chapter "Technical data".

NOTE!
1) When fitting the screw-in cartridge valve, use the specified tightening torque. The value can be found in the chapter "Technical data".

Ordering code

e.g. CVFP - 10 - N - 0 - 005

CVFP = spring loaded check valve

10 = nominal size SAE 10 / NG 8

N = NBR (nitril-butadien-rubber / BUNA) seals *(standard)*
V = FKM (fluorocarbon rubber / VITON) seals
(special seals - please consult BUCHER)

0 = screw-in cartridge only
06TA = line-mounting body aluminum SAE #06 ports
06TS = line-mounting body steel SAE #06 ports
08TA = line-mounting body aluminum SAE #08 ports
08TS = line-mounting body steel SAE #08 ports

005 = opening pressure 5 psi
015 = opening pressure 15 psi
030 = opening pressure 30 psi
060 = opening pressure 60 psi
120 = opening pressure 120 psi

Related data sheets

Reference	Description
520-P-000050	Form tools
520-P-000120	Cavity C1020
520-P-000121	Threaded port body B1020

info.us@bucherhydraulics.com **www.bucherhydraulics.com**

© 2021 by Bucher Hydraulics Inc., Elgin, IL 60124, USA

All rights reserved.
Data is provided for the purpose of product description only, and must not be construed as warranted characteristics in the legal sense. The information does not relieve users from the duty of conducting their own evaluations and tests. Because the products are subject to continual improvement, we reserve the right to amend the product specifications contained in this catalogue.

BUCHER hydraulics
WWW.SUMY.IR

Cavity Type C1220

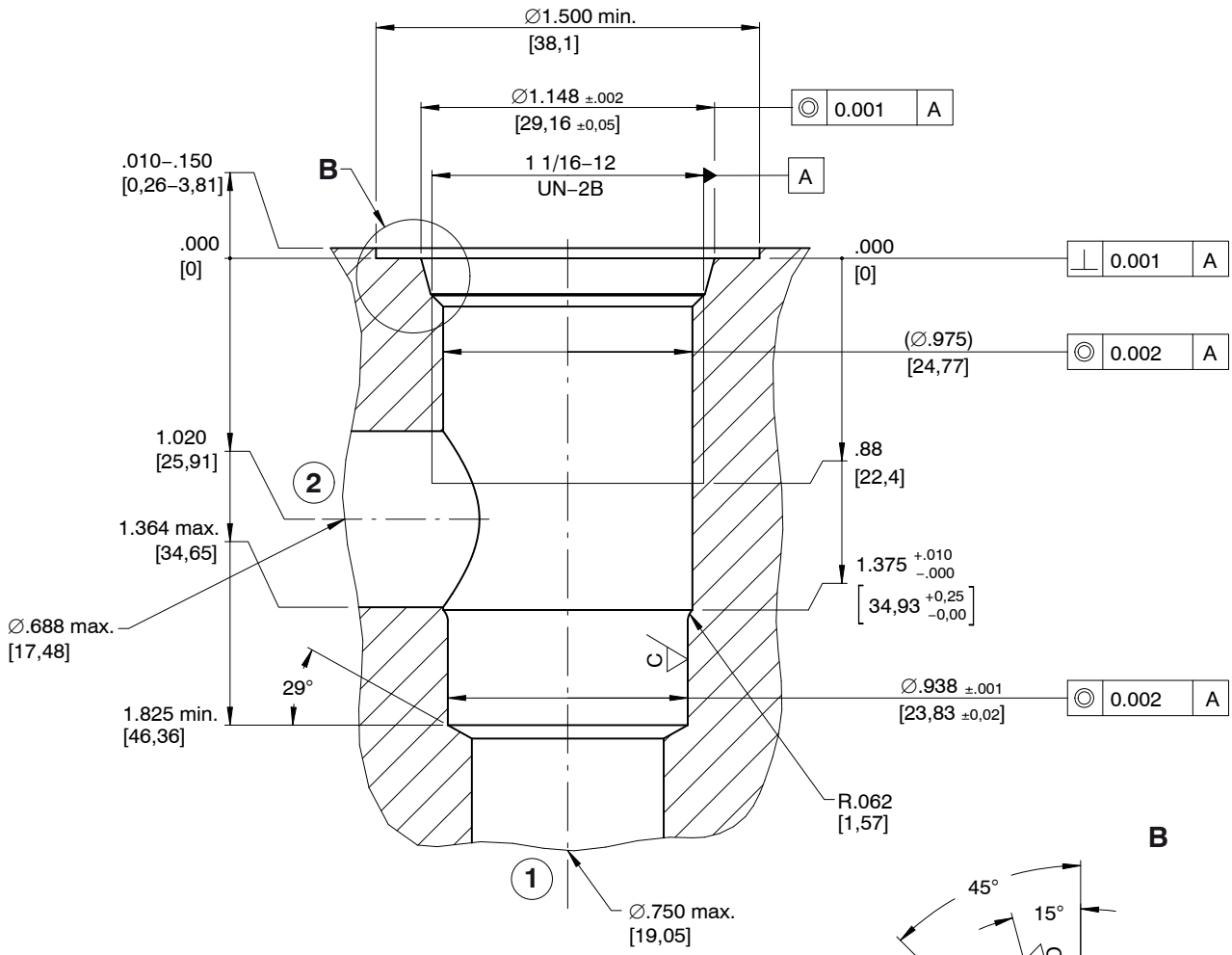

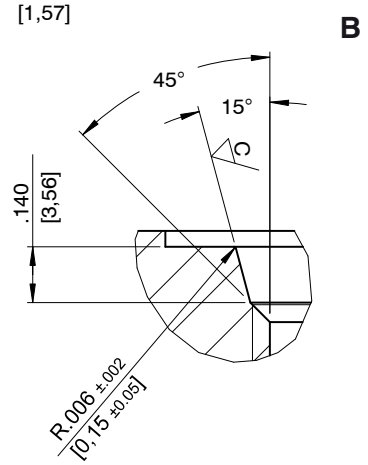

Example dimension unit:		
.010	= .010 "	inch
[0,79]	= 0,79 mm	millimeter

Dimension Tolerances	
Unless otherwise specified	
0.000	± .005″
0.00	± .010″
Angles	± 1/2°

Surface roughness		
Ra	C	D
	45 µin	125 µin
	(1.15 µm)	(3.2 µm)
	D Unless otherwise specified	

Reference: 520-P-000130-EN-01

WWW.SUMY.IR

1 Related data sheets

Reference	(Old no.)	Description
520-P-000050		The form-tool selling programme
520-P-000131	(0–013.1)	Line-mounting body, 12 Series – 2-way

info.el@bucherhydraulics.com www.bucherhydraulics.com/commoncavity

© 2016 by Bucher Hydraulics, Inc., 2545 Northwest Parkway, Elgin, Illinois 60124, USA
All rights reserved.
Data is provided for the purpose of product description only, and must not be construed as warranted characteristics in the legal sense. The information does not relieve users from the duty of conducting their own evaluations and tests. Because the products are subject to continual improvement, we reserve the right to amend the product specifications contained in this catalogue.

Classification: 430.Cavity.…

BUCHER hydraulics

WWW.SUMY.IR

Check valve
Spring loaded check

Q_{max} = 135 l/min, p_{max} = 350 bar
hydraulical operation, poppet type
Type series: CVFP-12-...

- Screw-in cartridge valve
- For cavity C1220
- All external parts zinc plated, chromited (CrVI-free)
- Installation in threaded port body type B1220
- Wide selection of bias springs allows flexibility for back-pressure application

Description

This unit is a screw-in cartridge style, guided poppet, hydraulic check valve, for use as a blocking or load holding device for high pressure applications. This valve allows free flow from port 1 to port 2 and blocks flow from port 2 to port 1 or holding a load.

Symbol

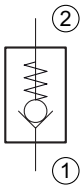

Technical data

General Characteristics	Description, value, unit
Function group	Check valve
Function	Spring loaded check
Design	Screw-in cartridge valve
Controls	hydraulical operation
Characteristic	poppet type
Construction size	SAE 12 / nominal size 10
Thread size	1 1/16-12 UN-2A
Mounting attitude	unrestricted
Weight	0.22 kg
Cavity acc. factory standard	For cavity C1220
Tightening torque steel	98.5 Nm
Tightening torque aluminium	77.5 Nm
Tightening torque tolerance	± 5 %
Minimum ambient temperature	- 30 °C
Maximum ambient temperature	+ 120 °C
Surface protection	All external parts zinc plated, chromited (CrVI-free)
Available seal types	several seal types available, see ordering code
Seal kit order number	NBR: SKN-1221 / FKM: SKV-1221

Hydraulic Characteristics	Description, value, unit
Maximum operating pressure	350 bar
Maximum flow rate	135 l/min
Flow direction	see symbol
Hydraulic fluid	All general purpose hydraulic fluids such as MIL-H-5606, SAE-#10, SAE-#20, etc.
Minimum fluid temperature	- 25 °C
Maximum fluid temperature	+ 80 °C
Viscosity range	10 ... 500 mm^2/s (cSt)
Recommended viscosity range	15 ... 250 mm^2/s (cSt)
Minimum fluid cleanliness (cleanlineless class according to ISO 4406:1999)	class 18/16/13
Internal leakage flow rate	5 drops/min maximum at 350 bar

Performance graphs

measured with oil viscosity 28.5 mm^2/s (cSt)

Δp = f (Q) Pressure drop-flow rate characteristic

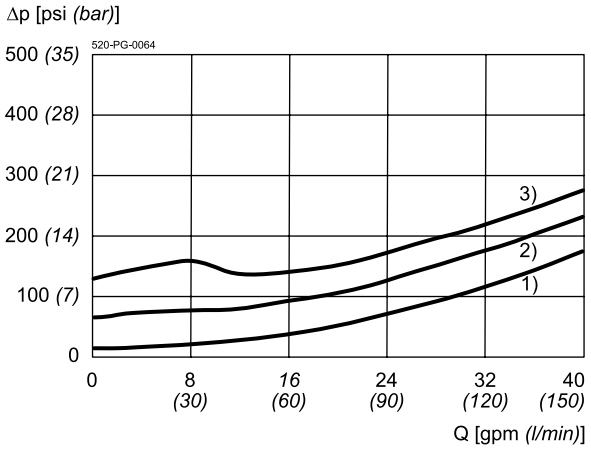

1) = p_N 5 psi *(0.35 bar)*
2) = p_N 60 psi *(4.0 bar)*
3) = p_N 120 psi *(8.0 bar)*

Dimensions and sectional view

Beispiel für die Masseinheit:
Example for the dimensional units:

.031 = 0.031" inch
(0.79) = 0.79 mm millimeter

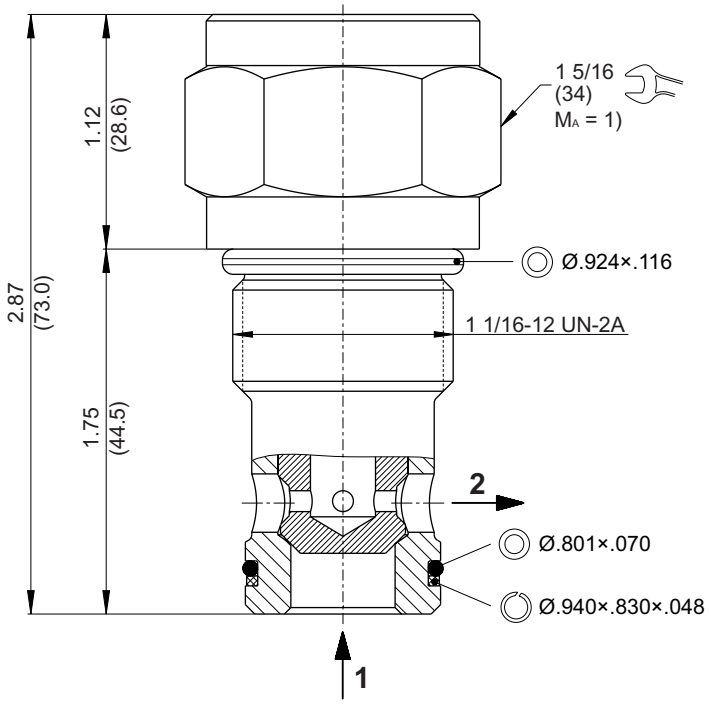

Installation information

ATTENTION!
Only qualified personnel with mechanical skills may carry out any maintenance work. Generally, the only work that should ever be undertaken is to check, and possibly replace, the seals. When changing seals, oil or grease the new seals thoroughly before fitting them.

NOTE!
The seals are not available individually. The seal kit order number can be found in the chapter "Technical data".

NOTE!
1) When fitting the screw-in cartridge valve, use the specified tightening torque. The value can be found in the chapter "Technical data".

Ordering code

e.g. CVFP - 12 - N - 0 - 005

CVFP = spring loaded check valve

12 = nominal size SAE 12 / NG 10

N = NBR (nitril-butadien-rubber / BUNA) seals *(standard)*
V = FKM (fluorocarbon rubber / VITON) seals
(special seals - please consult BUCHER)

0 = screw-in cartridge only
10TA = line-mounting body aluminum SAE #10 ports
10TS = line-mounting body steel SAE #10 ports
12TA = line-mounting body aluminum SAE #12 ports
12TS = line-mounting body steel SAE #12 ports

005 = opening pressure 5 psi
015 = opening pressure 15 psi
030 = opening pressure 30 psi
060 = opening pressure 60 psi
120 = opening pressure 120 psi

Related data sheets

Reference	Description
520-P-000050	Form tools
520-P-000130	Cavity C1220
520-P-000131	Threaded port body B1220

info.us@bucherhydraulics.com **www.bucherhydraulics.com**

© 2021 by Bucher Hydraulics Inc., Elgin, IL 60124, USA

All rights reserved.
Data is provided for the purpose of product description only, and must not be construed as warranted characteristics in the legal sense. The information does not relieve users from the duty of conducting their own evaluations and tests. Because the products are subject to continual improvement, we reserve the right to amend the product specifications contained in this catalogue.

Cavity Type C1620

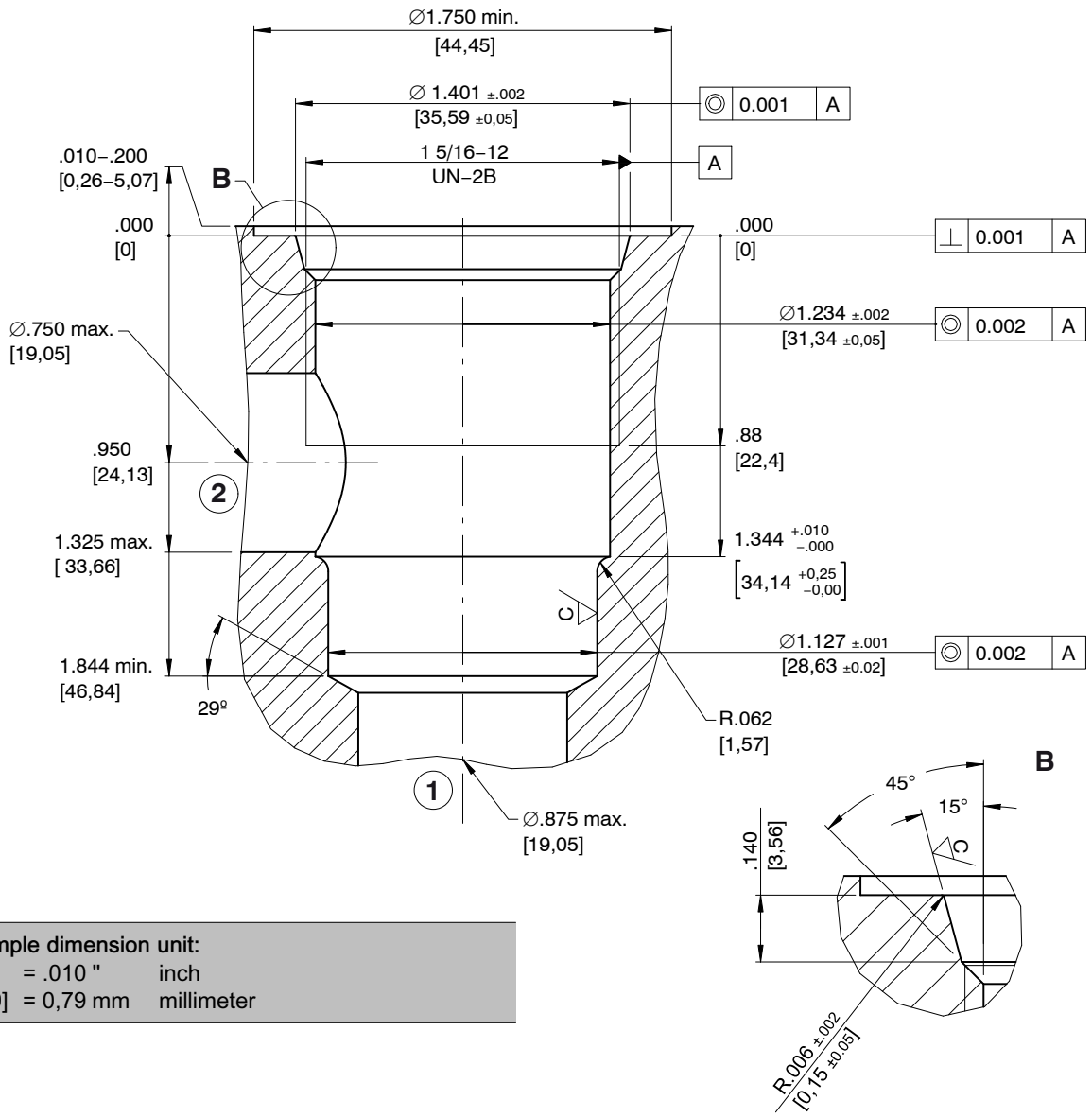

Example dimension unit:		
.010	= .010 "	inch
[0,79]	= 0,79 mm	millimeter

Dimension Tolerances	
Unless otherwise specified	
0.000	± .005″
0.00	± .010″
Angles	± 1/2°

Surface roughness		
Ra	C	D
	45 µin	125 µin
	(1.15 µm)	(3.2 µm)
	D	Unless otherwise specified

Reference: 520-P-000140-EN-01

WWW.SUMY.IR

1 Related data sheets

Reference	(Old no.)	Description
520-P-000050		The form-tool selling programme
520-P-000141	(0–014.1)	Line-mounting body, 16 Series – 2-way

info.el@bucherhydraulics.com www.bucherhydraulics.com/commoncavity

© 2016 by Bucher Hydraulics, Inc., 2545 Northwest Parkway, Elgin, Illinois 60124, USA
All rights reserved.
Data is provided for the purpose of product description only, and must not be construed as warranted characteristics in the legal sense. The information does not relieve users from the duty of conducting their own evaluations and tests. Because the products are subject to continual improvement, we reserve the right to amend the product specifications contained in this catalogue.

Classification: 430.Cavity.…

BUCHER hydraulics

WWW.SUMY.IR

Check valve
Spring loaded check

Q_{max} = 225 l/min, p_{max} = 350 bar
poppet type, hydraulical operation
Type series: CVFP-16-...

- Screw-in cartridge valve
- For cavity C1620
- All external parts zinc plated, chromited (CrVI-free)
- Installation in threaded port body type B1620
- Wide selection of bias springs allows flexibility for back-pressure application

Description

This unit is a screw-in cartridge style, guided poppet, hydraulic check valve, for use as a blocking or load holding device for high pressure applications. This valve allows free flow from port 1 to port 2 and blocks flow from port 2 to port 1 or holding a load.

Symbol

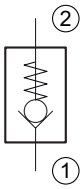

Technical data

General Characteristics	Description, value, unit
Function group	Check valve
Function	Spring loaded check
Design	Screw-in cartridge valve
Controls	hydraulical operation
Characteristic	poppet type
Construction size	SAE 16 / nominal size 12
Thread size	1 5/16-12 UN-2A
Mounting attitude	unrestricted
Weight	0.39 kg
Cavity acc. factory standard	For cavity C1620
Tightening torque steel	132.5 Nm
Tightening torque aluminium	98.5 Nm
Tightening torque tolerance	± 5 %
Minimum ambient temperature	- 30 °C
Maximum ambient temperature	+ 120 °C
Surface protection	All external parts zinc plated, chromited (CrVI-free)
Available seal types	several seal types available, see ordering code
Seal kit order number	NBR: SKN-1621 / FKM: SKV-1621

Hydraulic Characteristics	Description, value, unit
Maximum operating pressure	350 bar
Maximum flow rate	225 l/min
Flow direction	see symbol
Hydraulic fluid	All general purpose hydraulic fluids such as MIL-H-5606, SAE-#10, SAE-#20, etc.
Minimum fluid temperature	- 25 °C
Maximum fluid temperature	+ 80 °C
Viscosity range	10 ... 500 mm^2/s (cSt)
Recommended viscosity range	15 ... 250 mm^2/s (cSt)
Minimum fluid cleanliness (cleanlineless class according to ISO 4406:1999)	class 18/16/13
Internal leakage flow rate	5 drops/min maximum at 350 bar

Performance graphs

measured with oil viscosity 28.5 mm^2/s (cSt)

Δp = f (Q) Pressure drop-flow rate characteristic

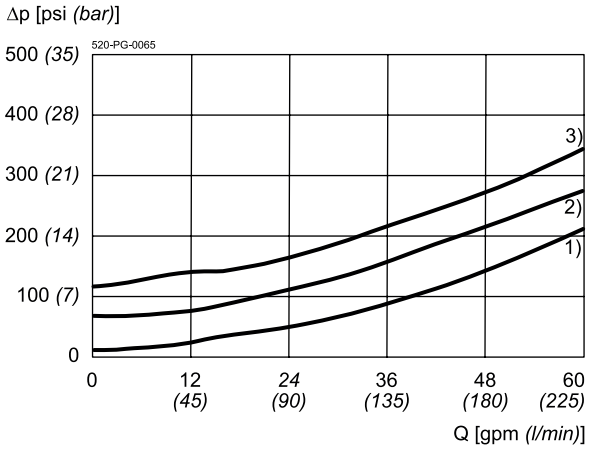

1) = p_N 5 psi *(0.35 bar)*
2) = p_N 60 psi *(4.0 bar)*
3) = p_N 120 psi *(8.0 bar)*

Dimensions and sectional view

Beispiel für die Masseinheit:
Example for the dimensional units:

.031 = 0.031" inch
(0.79) = 0.79 mm millimeter

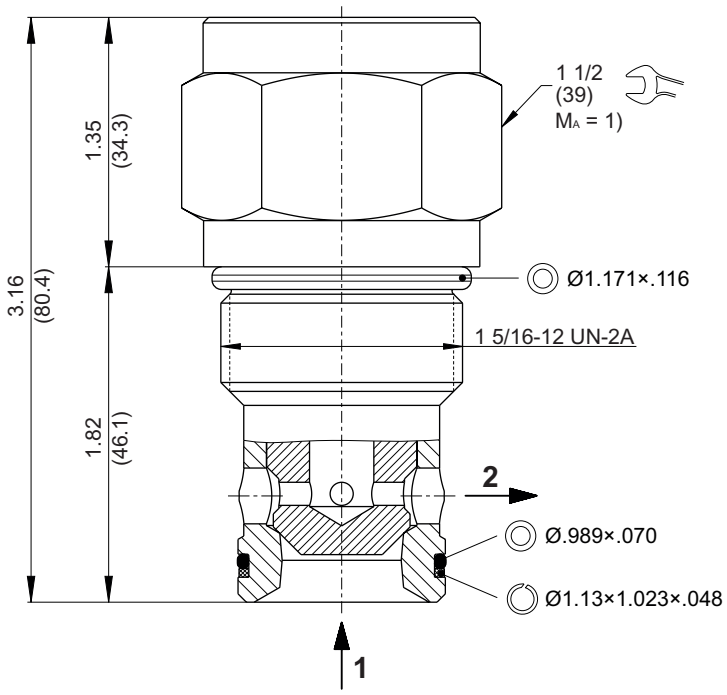

Installation information

ATTENTION!
Only qualified personnel with mechanical skills may carry out any maintenance work. Generally, the only work that should ever be undertaken is to check, and possibly replace, the seals. When changing seals, oil or grease the new seals thoroughly before fitting them.

NOTE!
The seals are not available individually. The seal kit order number can be found in the chapter "Technical data".

NOTE!
1) When fitting the screw-in cartridge valve, use the specified tightening torque. The value can be found in the chapter "Technical data".

Ordering code

e.g. CVFP - 16 - N - 0 - 005

CVFP = spring loaded check valve

16 = nominal size SAE 16 / NG 12

N = NBR (nitril-butadien-rubber / BUNA) seals *(standard)*
V = FKM (fluorocarbon rubber / VITON) seals
(special seals - please consult BUCHER)

0 = screw-in cartridge only
12TA = line-mounting body aluminum SAE #12 ports
12TS = line-mounting body steel SAE #12 ports
16TA = line-mounting body aluminum SAE #16 ports
16TS = line-mounting body steel SAE #16 ports

005 = opening pressure 5 psi
015 = opening pressure 15 psi
030 = opening pressure 30 psi
060 = opening pressure 60 psi
120 = opening pressure 120 psi

Related data sheets

Reference	Description
520-P-000050	Form tools
520-P-000140	Cavity C1620
520-P-000141	Threaded port body B1620

info.us@bucherhydraulics.com **www.bucherhydraulics.com**

© 2021 by Bucher Hydraulics Inc., Elgin, IL 60124, USA

All rights reserved.
Data is provided for the purpose of product description only, and must not be construed as warranted characteristics in the legal sense. The information does not relieve users from the duty of conducting their own evaluations and tests. Because the products are subject to continual improvement, we reserve the right to amend the product specifications contained in this catalogue.

BUCHER hydraulics

WWW.SUMY.IR

Check valve
Spring loaded check

Q_{max} = 37 l/min, p_{max} = 350 bar
poppet type, hydraulical operation
Type series: CVRP-08-...

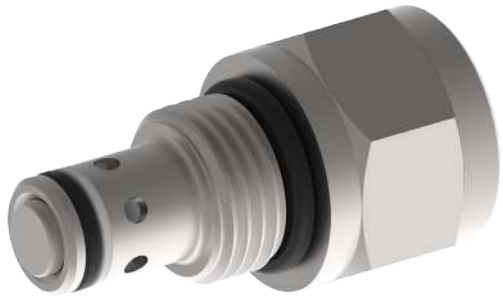

- Screw-in cartridge valve
- For cavity C0820
- All external parts zinc plated, chromited (CrVI-free)
- Installation in threaded port body type B0820
- Wide selection of bias springs allows flexibility for back-pressure application

Description

This unit is a screw-in cartridge style, guided poppet, hydraulic check valve, for use as a blocking or load holding device for high pressure applications. This valve allows free flow from port 2 to port 1 and blocks flow from port 1 to port 2 or holding a load.

Symbol

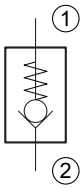

Technical data

General Characteristics	Description, value, unit
Function group	Check valve
Function	Spring loaded check
Design	Screw-in cartridge valve
Controls	hydraulical operation
Characteristic	poppet type
Construction size	SAE 08 / nominal size 5
Thread size	3/4-16 UNF-2A
Mounting attitude	unrestricted
Weight	0.12 kg
Cavity acc. factory standard	For cavity C0820
Tightening torque steel	50.5 Nm
Tightening torque aluminium	37.5 Nm
Tightening torque tolerance	± 5 %
Minimum ambient temperature	- 30 °C
Maximum ambient temperature	+ 120 °C
Surface protection	All external parts zinc plated, chromited (CrVI-free)
Available seal types	several seal types available, see ordering code
Seal kit order number	NBR: SKN-0821 / SKV-0821

Hydraulic Characteristics	Description, value, unit
Maximum operating pressure	350 bar
Maximum flow rate	37 l/min
Flow direction	see symbol
Hydraulic fluid	All general purpose hydraulic fluids such as MIL-H-5606, SAE-#10, SAE-#20, etc.
Minimum fluid temperature	- 25 °C
Maximum fluid temperature	+ 80 °C
Viscosity range	10 ... 500 mm^2/s (cSt)
Recommended viscosity range	15 ... 250 mm^2/s (cSt)
Minimum fluid cleanliness (cleanlineless class according to ISO 4406:1999)	class 18/16/13
Internal leakage flow rate	5 drops/min maximum at 350 bar

BUCHER
hydraulics
WWW.SUMY.IR

Performance graphs

measured with oil viscosity 28.5 mm²/s (cSt)

Δp = f (Q) Pressure drop-flow rate characteristic

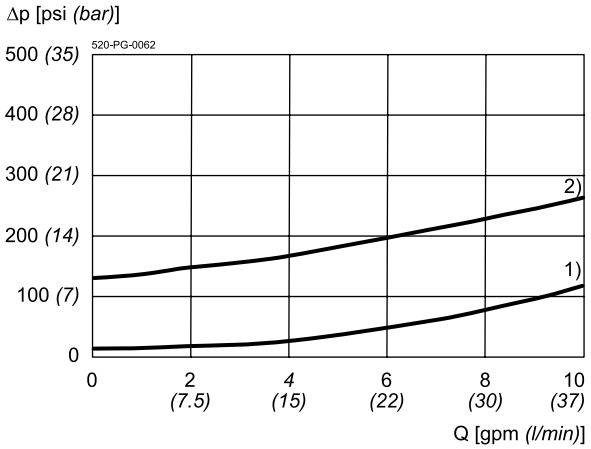

1) = p_N 5 psi *(0.35 bar)*
2) = p_N 120 psi *(8.0 bar)*

Dimensions and sectional view

Beispiel für die Masseinheit:
Example for the dimensional units:

.031 = 0.031" inch
(0.79) = 0.79 mm millimeter

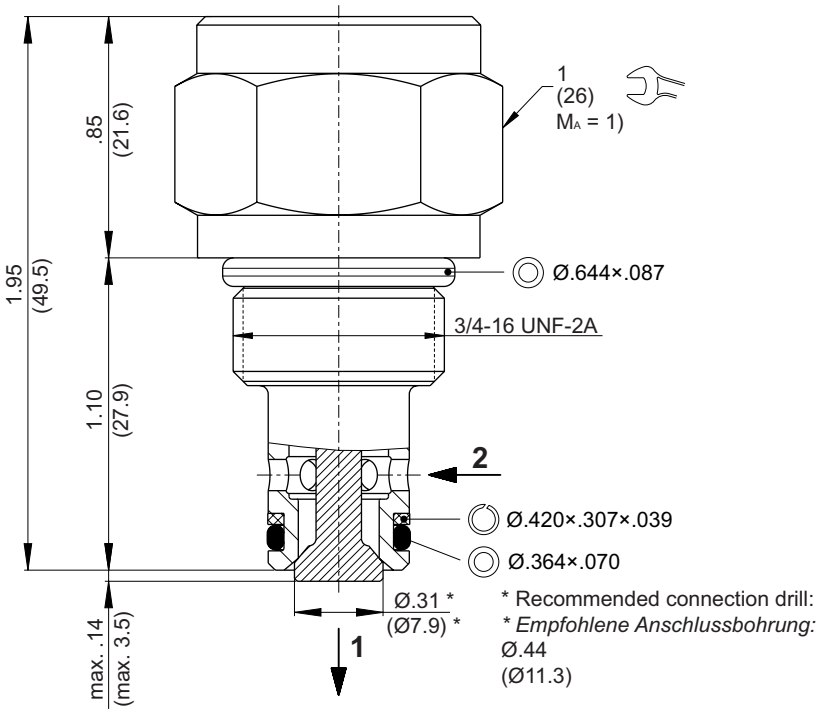

Installation information

ATTENTION!
Only qualified personnel with mechanical skills may carry out any maintenance work. Generally, the only work that should ever be undertaken is to check, and possibly replace, the seals. When changing seals, oil or grease the new seals thoroughly before fitting them.

NOTE!
The seals are not available individually. The seal kit order number can be found in the chapter "Technical data".

NOTE!
1) When fitting the screw-in cartridge valve, use the specified tightening torque. The value can be found in the chapter "Technical data".

Ordering code

e.g. CVRP - 08 - N - 0 - 005

CVRP = spring loaded check valve

08 = nominal size SAE 08 / NG 5

N = NBR (nitril-butadien-rubber / BUNA) seals *(standard)*
V = FKM (fluorocarbon rubber / VITON) seals
(special seals - please consult BUCHER)

0 = screw-in cartridge only
06TA = line-mounting body aluminum SAE #06 ports
06TS = line-mounting body steel SAE #06 ports

005 = opening pressure 5 psi
015 = opening pressure 15 psi
030 = opening pressure 30 psi
060 = opening pressure 60 psi
120 = opening pressure 120 psi

Related data sheets

Reference	Description
520-P-000050	Form tools
520-P-000110	Cavity C0820
520-P-000111	Threaded port body B0820

info.us@bucherhydraulics.com **www.bucherhydraulics.com**

© 2021 by Bucher Hydraulics Inc., Elgin, IL 60124, USA

All rights reserved.
Data is provided for the purpose of product description only, and must not be construed as warranted characteristics in the legal sense. The information does not relieve users from the duty of conducting their own evaluations and tests. Because the products are subject to continual improvement, we reserve the right to amend the product specifications contained in this catalogue.

BUCHER hydraulics
WWW.SUMY.IR

Check valve
Spring loaded check

Q_{max} = 68 l/min, p_{max} = 350 bar
poppet type, hydraulical operation
Type series: CVRP-10-...

- Screw-in cartridge valve
- For cavity C1020
- All external parts zinc plated, chromited (CrVI-free)
- Installation in threaded port body type B1020
- Wide selection of bias springs allows flexibility for back-pressure application

Description

This unit is a screw-in cartridge style, guided poppet, hydraulic check valve, for use as a blocking or load holding device for high pressure applications. This valve allows free flow from port 2 to port 1 and blocks flow from port 1 to port 2 or holding a load.

Symbol

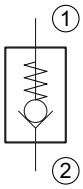

Technical data

General Characteristics	Description, value, unit
Function group	Check valve
Function	Spring loaded check
Design	Screw-in cartridge valve
Controls	hydraulical operation
Characteristic	poppet type
Construction size	SAE 10 / nominal size 8
Thread size	7/8-14 UNF-2A
Mounting attitude	unrestricted
Weight	0.12 kg
Cavity acc. factory standard	For cavity C1020
Tightening torque steel	77.5 Nm
Tightening torque aluminium	50.5 Nm
Tightening torque tolerance	± 5 %
Minimum ambient temperature	- 30 °C
Maximum ambient temperature	+ 120 °C
Surface protection	All external parts zinc plated, chromited (CrVI-free)
Available seal types	several seal types available, see ordering code
Seal kit order number	NBR: SKN-1021 / FKM: SKV-1021

Hydraulic Characteristics	Description, value, unit
Maximum operating pressure	350 bar
Maximum flow rate	68 l/min
Flow direction	see symbol
Hydraulic fluid	All general purpose hydraulic fluids such as MIL-H-5606, SAE-#10, SAE-#20, etc.
Minimum fluid temperature	- 25 °C
Maximum fluid temperature	+ 80 °C
Viscosity range	10 ... 500 mm^2/s (cSt)
Recommended viscosity range	15 ... 250 mm^2/s (cSt)
Minimum fluid cleanliness (cleanlineless class according to ISO 4406:1999)	class 18/16/13
Internal leakage flow rate	5 drops/min maximum at 350 bar

Performance graphs

measured with oil viscosity 28.5 mm²/s (cSt)

Δp = f (Q) Pressure drop-flow rate characteristic

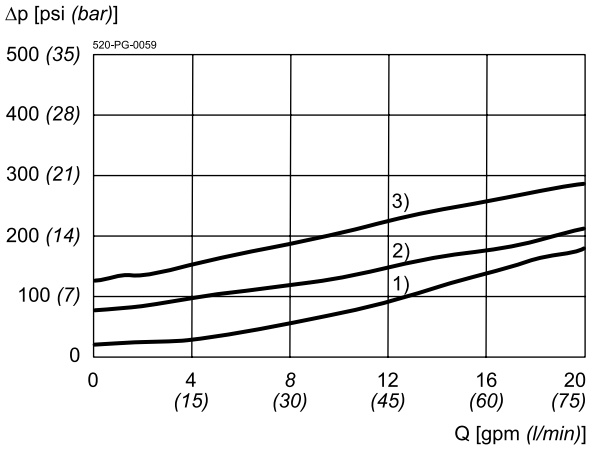

1) = p_N 5 psi *(0.35 bar)*
2) = p_N 60 psi *(4.0 bar)*
3) = p_N 120 psi *(8.0 bar)*

Dimensions and sectional view

Beispiel für die Masseinheit:
Example for the dimensional units:

.031 = 0.031" inch
(0.79) = 0.79 mm millimeter

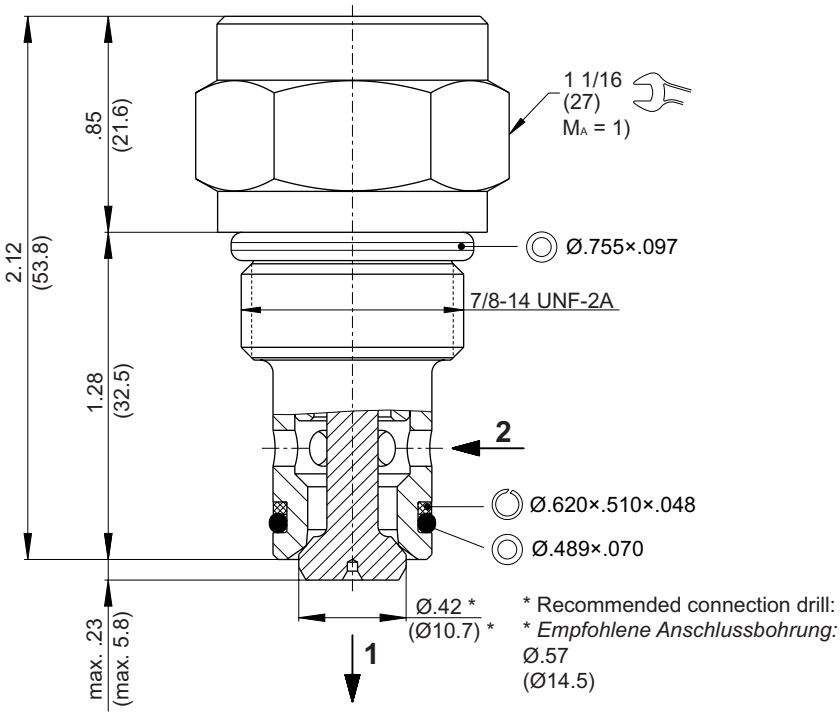

Installation information

ATTENTION!
Only qualified personnel with mechanical skills may carry out any maintenance work. Generally, the only work that should ever be undertaken is to check, and possibly replace, the seals. When changing seals, oil or grease the new seals thoroughly before fitting them.

NOTE!
The seals are not available individually. The seal kit order number can be found in the chapter "Technical data".

NOTE!
1) When fitting the screw-in cartridge valve, use the specified tightening torque. The value can be found in the chapter "Technical data".

Ordering code

e.g. CVRP - 10 - N - 0 - 005

CVRP = spring loaded check valve

10 = nominal size SAE 10 / NG 8

N = NBR (nitril-butadien-rubber / BUNA) seals *(standard)*
V = FKM (fluorocarbon rubber / VITON) seals
(special seals - please consult BUCHER)

0 = screw-in cartridge only
06TA = line-mounting body aluminum SAE #06 ports
06TS = line-mounting body steel SAE #06 ports
08TA = line-mounting body aluminum SAE #08 ports
08TS = line-mounting body steel SAE #08 ports

005 = opening pressure 5 psi
015 = opening pressure 15 psi
030 = opening pressure 30 psi
060 = opening pressure 60 psi
120 = opening pressure 120 psi

Related data sheets

Reference	Description
520-P-000050	Form tools
520-P-000120	Cavity C1020
520-P-000121	Threaded port body B1020

info.us@bucherhydraulics.com www.bucherhydraulics.com

© 2021 by Bucher Hydraulics Inc., Elgin, IL 60124, USA

All rights reserved.
Data is provided for the purpose of product description only, and must not be construed as warranted characteristics in the legal sense. The information does not relieve users from the duty of conducting their own evaluations and tests. Because the products are subject to continual improvement, we reserve the right to amend the product specifications contained in this catalogue.

BUCHER
hydraulics
WWW.SUMY.IR

Lock valve
Check valve

Q_{max} = 135 l/min, p_{max} = 350 bar
poppet type, hydraulical operation
Type series: CVRP-12-...

- Screw-in cartridge valve
- For cavity C1220
- All external parts zinc plated, chromited (CrVI-free)
- Installation in threaded port body type B1220
- Wide selection of bias springs allows flexibility for back-pressure application

Phase-Out

Description

This unit is a screw-in cartridge style, guided poppet, hydraulic check valve, for use as a blocking or load holding device for high pressure applications. This valve allows free flow from port 2 to port 1 and blocks flow from port 1 to port 2 or holding a load.

Symbol

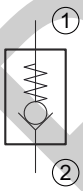

Technical data

General characteristics	Description, value, unit
Product status	Phase-Out
Function group	Lock valve
Function	Check valve
Design	Screw-in cartridge valve

WWW.SUMY.IR

General characteristics	Description, value, unit
Controls	hydraulical operation
Characteristic	poppet type
Construction size	NG 10 / SAE 12
Thread size	1 1/16-12 UN-2A
Mounting attitude	unrestricted
Weight	0.302 kg
Cavity acc. factory standard	For cavity C1220
Tightening torque steel	98.5 Nm
Tightening torque aluminium	77.5 Nm
Tightening torque tolerance	± 5 %
Minimum ambient temperature	- 30 °C
Maximum ambient temperature	+ 120 °C
Surface protection	All external parts zinc plated, chromited (CrVI-free)
Sealing material	see ordering code
Seal kit order number	NBR: SKN-1221 / FKM: SKV-1221

Hydraulic characteristics	Description, value, unit
Maximum operating pressure	350 bar
Maximum flow rate	135 l/min
Flow direction	see symbol
Hydraulic fluid	All general purpose hydraulic fluids such as MIL-H-5606, SAE-#10, SAE-#20, etc.
Minimum fluid temperature	- 25 °C
Maximum fluid temperature	+ 80 °C
Viscosity range	10 ... 500 mm^2/s (cSt)
Recommended viscosity range	15 ... 250 mm^2/s (cSt)
Minimum fluid cleanliness (cleanlineless class according to ISO 4406:1999)	class 18/16/13
Internal leakage flow rate	5 drops/min maximum at 350 bar

Phase-Out

Performance graphs

measured with oil viscosity 28.5 mm²/s (cSt)

Δp = f (Q) Pressure drop-flow rate characteristic

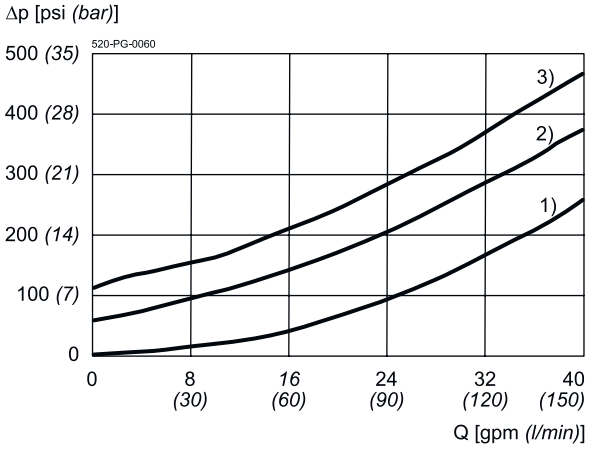

1) = p_N 5 psi *(0.35 bar)*
2) = p_N 60 psi *(4.0 bar)*
3) = p_N 120 psi *(8.0 bar)*

Dimensions and sectional view

Beispiel für die Masseinheit:
Example for the dimensional units:

.031	= 0.031"	inch
(0.79)	= 0.79 mm	millimeter

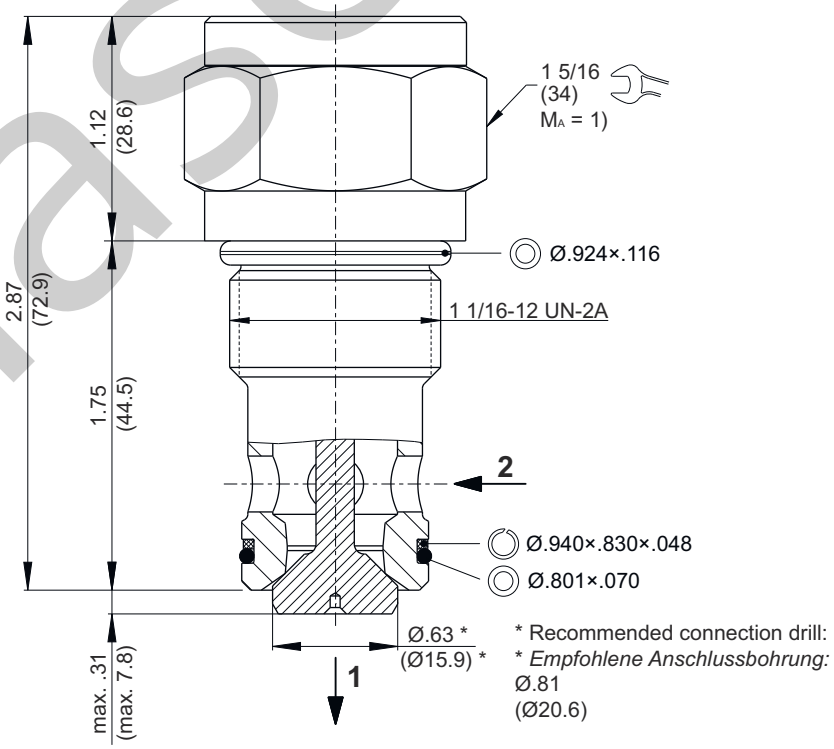

Phase-Out

Installation information

ATTENTION!
Only qualified personnel with mechanical skills may carry out any maintenance work. Generally, the only work that should ever be undertaken is to check, and possibly replace, the seals. When changing seals, oil or grease the new seals thoroughly before fitting them.

NOTE!
1) When fitting the screw-in cartridge valve, use the specified tightening torque. The value can be found in the chapter "Technical data".

NOTE!
The seals are not available individually. The seal kit order number can be found in the chapter "Technical data".

Ordering code

e.g. CVRP - 12 - N - 0 - 005

CVRP = spring loaded check valve
12 = nominal size SAE 12 / NG 10
N = NBR (nitril-butadien-rubber / BUNA) seals *(standard)*
V = FKM (fluorocarbon rubber / VITON) seals
(special seals - please consult BUCHER)
0 = screw-in cartridge only
10TA = line-mounting body aluminum SAE #10 ports
10TS = line-mounting body steel SAE #10 ports
12TA = line-mounting body aluminum SAE #12 ports
12TS = line-mounting body steel SAE #12 ports
005 = opening pressure 5 psi
015 = opening pressure 15 psi
030 = opening pressure 30 psi
060 = opening pressure 60 psi
120 = opening pressure 120 psi

Related data sheets

Reference	Description
520-P-000050	Form tools
520-P-000130	Cavity C1220
520-P-000131	Threaded port body B1220

Phase-Out

info.us@bucherhydraulics.com www.bucherhydraulics.com

© 2025 by Bucher Hydraulics Inc., Elgin, IL 60124, USA

All rights reserved.
Data is provided for the purpose of product description only, and must not be construed as warranted characteristics in the legal sense. The information does not relieve users from the duty of conducting their own evaluations and tests. Because the products are subject to continual improvement, we reserve the right to amend the product specifications contained in this catalogue.

BUCHER hydraulics
WWW.SUMY.IR

Lock valve
Check valve

Q_{max} = 185 l/min, p_{max} = 350 bar
poppet type, hydraulical operation
Type series: CVRP-16-...

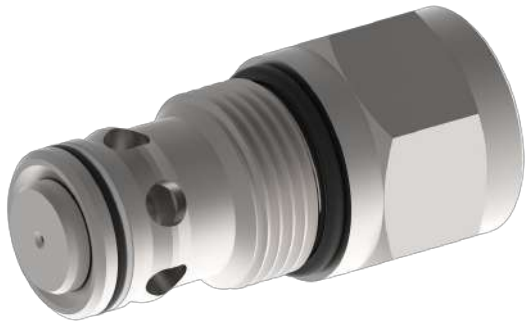

- Screw-in cartridge valve
- For cavity C1620
- All external parts zinc plated, chromited (CrVI-free)
- Installation in threaded port body type B1620
- Wide selection of bias springs allows flexibility for back-pressure application

Phase-Out

Description

This unit is a screw-in cartridge style, guided poppet, hydraulic check valve, for use as a blocking or load holding device for high pressure applications. This valve allows free flow from port 2 to port 1 and blocks flow from port 1 to port 2 or holding a load.

Symbol

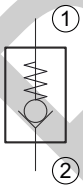

Technical data

General characteristics	Description, value, unit
Product status	Phase-Out
Function group	Lock valve
Function	Check valve
Design	Screw-in cartridge valve

WWW.SUMY.IR

General characteristics	Description, value, unit
Controls	hydraulical operation
Characteristic	poppet type
Construction size	NG 12 / SAE 16
Thread size	1 5/16-12 UN-2A
Mounting attitude	unrestricted
Weight	0.481 kg
Cavity acc. factory standard	For cavity C1620
Tightening torque steel	132.5 Nm
Tightening torque aluminium	98.5 Nm
Tightening torque tolerance	± 5 %
Minimum ambient temperature	- 30 °C
Maximum ambient temperature	+ 120 °C
Surface protection	All external parts zinc plated, chromited (CrVI-free)
Sealing material	see ordering code
Seal kit order number	NBR: SKN-1621 / FKM: SKV-1621

Hydraulic characteristics	Description, value, unit
Maximum operating pressure	350 bar
Maximum flow rate	185 l/min
Flow direction	see symbol
Hydraulic fluid	All general purpose hydraulic fluids such as MIL-H-5606, SAE-#10, SAE-#20, etc.
Minimum fluid temperature	- 25 °C
Maximum fluid temperature	+ 80 °C
Viscosity range	10 ... 500 mm^2/s (cSt)
Recommended viscosity range	15 ... 250 mm^2/s (cSt)
Minimum fluid cleanliness (cleanlineless class according to ISO 4406:1999)	class 18/16/13
Internal leakage flow rate	5 drops/min maximum at 350 bar

Phase-Out

BUCHER hydraulics
WWW.SUMY.IR

Performance graphs

measured with oil viscosity 28.5 mm²/s (cSt)

Δp = f (Q) Pressure drop-flow rate characteristic

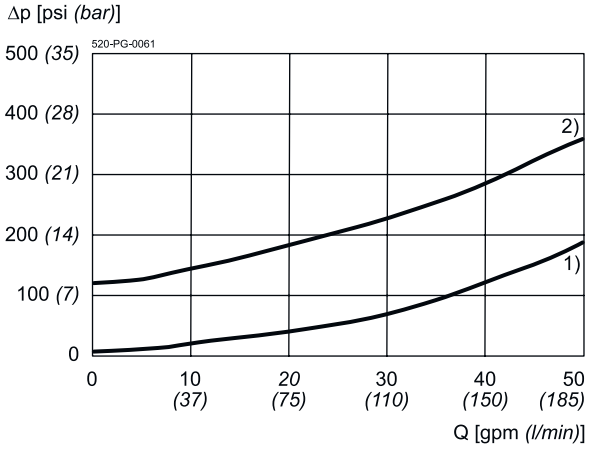

1) = p_N 5 psi *(0.35 bar)*
2) = p_N 120 psi *(8.0 bar)*

Dimensions and sectional view

Beispiel für die Masseinheit:
Example for the dimensional units:

.031	= 0.031"	inch
(0.79)	= 0.79 mm	millimeter

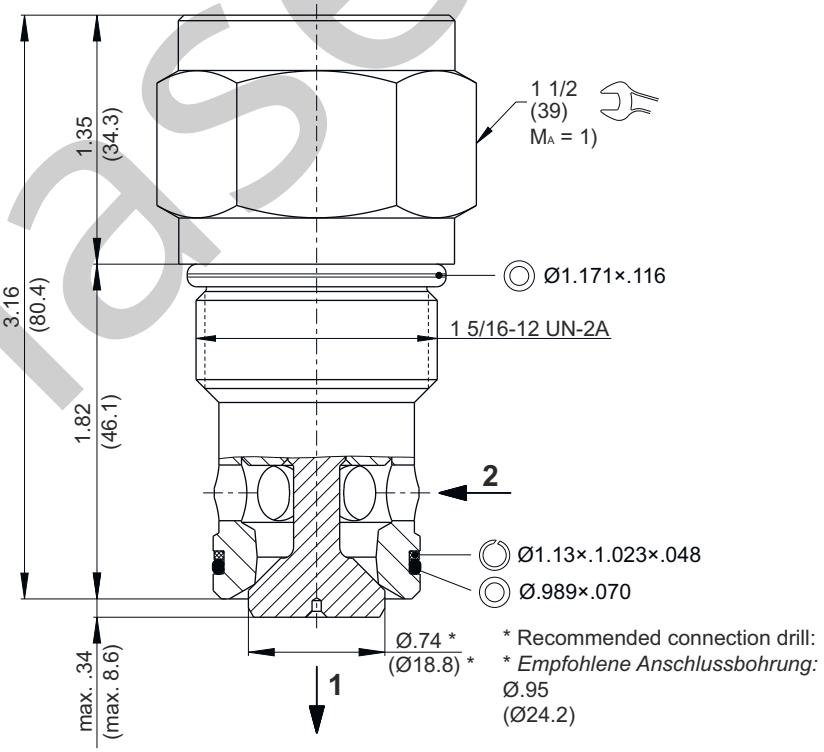

Phase-Out

Installation information

ATTENTION!
Only qualified personnel with mechanical skills may carry out any maintenance work. Generally, the only work that should ever be undertaken is to check, and possibly replace, the seals. When changing seals, oil or grease the new seals thoroughly before fitting them.

NOTE!
1) When fitting the screw-in cartridge valve, use the specified tightening torque. The value can be found in the chapter "Technical data".

NOTE!
The seals are not available individually. The seal kit order number can be found in the chapter "Technical data".

Ordering code

e.g. CVRP - 16 - N - 0 - 005

CVRP = spring loaded check valve

16 = nominal size SAE 16 / NG 12

N = NBR (nitril-butadien-rubber / BUNA) seals *(standard)*
V = FKM (fluorocarbon rubber / VITON) seals
(special seals - please consult BUCHER)

0	= screw-in cartridge only	
12TA	= line-mounting body aluminum	SAE #12 ports
12TS	= line-mounting body steel	SAE #12 ports
16TA	= line-mounting body aluminum	SAE #16 ports
16TS	= line-mounting body steel	SAE #16 ports

005	= opening pressure 5 psi
015	= opening pressure 15 psi
030	= opening pressure 30 psi
060	= opening pressure 60 psi
120	= opening pressure 120 psi

Related data sheets

Reference	Description
520-P-000050	Form tools
520-P-000140	Cavity C1620
520-P-000141	Threaded port body B1620

Phase-Out

info.us@bucherhydraulics.com **www.bucherhydraulics.com**

© 2025 by Bucher Hydraulics Inc., Elgin, IL 60124, USA

All rights reserved.
Data is provided for the purpose of product description only, and must not be construed as warranted characteristics in the legal sense. The information does not relieve users from the duty of conducting their own evaluations and tests. Because the products are subject to continual improvement, we reserve the right to amend the product specifications contained in this catalogue.

BUCHER hydraulics
WWW.SUMY.IR

Check valve
Spring loaded check

Q_{max} = 9.4 l/min, p_{max} = 350 bar
hydraulical operation, ball type
Type series: CVFB-04-...

- Screw-in cartridge valve
- For cavity C0420
- All external parts zinc plated, chromited (CrVI-free)

Description

This unit is a screw-in cartridge style, guided ball, hydraulic check valve, for use as a blocking or load holding device for high pressure applications. This valve allows free flow from port 1 to port 2 and blocks flow from port 2 to port 1 or holding a load.

Symbol

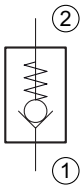

Technical data

General Characteristics	Description, value, unit
Function group	Check valve
Function	Spring loaded check
Design	Screw-in cartridge valve
Controls	hydraulical operation
Characteristic	ball type
Construction size	SAE 04 / nominal size 3
Thread size	7/16-20 UNF-2A
Mounting attitude	unrestricted
Weight	0.04 kg
Cavity acc. factory standard	For cavity C0420
Tightening torque steel	15 Nm
Tightening torque aluminium	15 Nm
Tightening torque tolerance	± 3 %
Minimum ambient temperature	- 30 °C
Maximum ambient temperature	+ 120 °C
Surface protection	All external parts zinc plated, chromited (CrVI-free)
Available seal types	several seal types available, see ordering code
Seal kit order number	NBR: SKN-0421 / FKM: SKV-0421

Hydraulic Characteristics	Description, value, unit
Maximum operating pressure	350 bar
Maximum flow rate	9.4 l/min
Flow direction	see symbol
Hydraulic fluid	All general purpose hydraulic fluids such as MIL-H-5606, SAE-#10, SAE-#20, etc.
Minimum fluid temperature	- 25 °C
Maximum fluid temperature	+ 80 °C
Viscosity range	10 ... 500 mm^2/s (cSt)
Recommended viscosity range	15 ... 250 mm^2/s (cSt)
Minimum fluid cleanliness (cleanlineless class according to ISO 4406:1999)	class 18/16/13
Internal leakage flow rate	5 drops/min maximum at 350 bar

Performance graphs

measured with oil viscosity 28.5 mm²/s (cSt)

Δp = f (Q) Pressure drop-flow rate characteristic

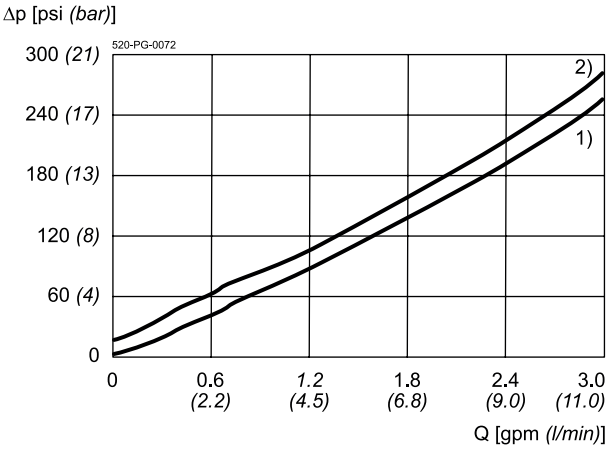

1) = p_N 5 psi *(0.35 bar)*
2) = p_N 20 psi *(1.5 bar)*

Dimensions and sectional view

Beispiel für die Masseinheit:
Example for the dimensional units:

.031 = 0.031" inch
(0.79) = 0.79 mm millimeter

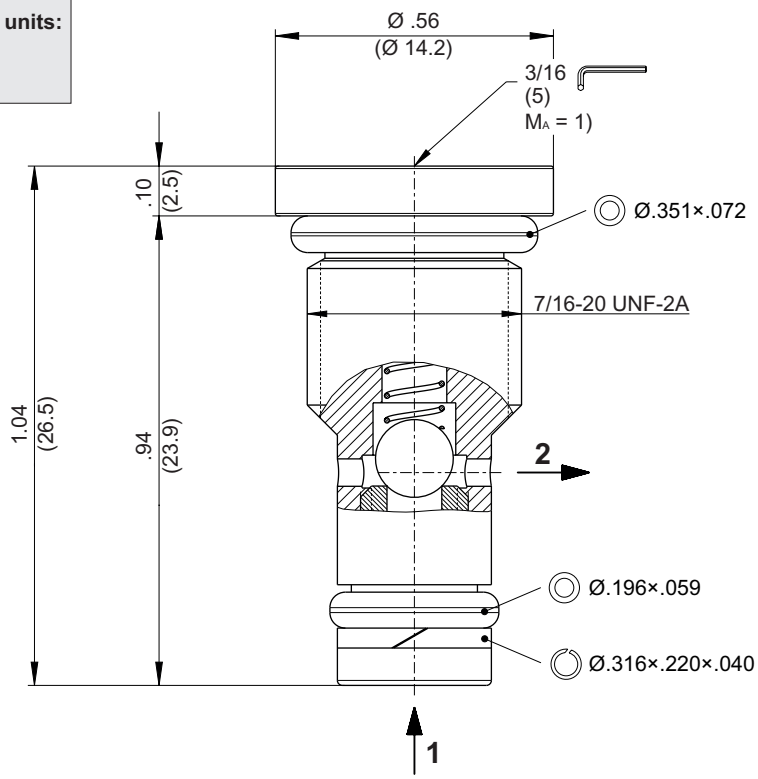

Installation information

ATTENTION!
Only qualified personnel with mechanical skills may carry out any maintenance work. Generally, the only work that should ever be undertaken is to check, and possibly replace, the seals. When changing seals, oil or grease the new seals thoroughly before fitting them.

NOTE!
The seals are not available individually. The seal kit order number can be found in the chapter "Technical data".

NOTE!
1) When fitting the screw-in cartridge valve, use the specified tightening torque. The value can be found in the chapter "Technical data".

Ordering code

e.g. CVFB - 04 - N - 0 - 005

CVFB = spring loaded check valve
04 = nominal size SAE 04 / NG 3
N = NBR (nitril-butadien-rubber / BUNA) seals *(standard)*
V = FKM (fluorocarbon rubber / VITON) seals
(special seals - please consult BUCHER)
0 = screw-in cartridge only
005 = opening pressure 5 psi
020 = opening pressure 20 psi

Related data sheets

Reference	Description
520-P-000050	Form tools
520-P-000100	Cavity C0420

info.us@bucherhydraulics.com **www.bucherhydraulics.com**

© 2021 by Bucher Hydraulics Inc., Elgin, IL 60124, USA

All rights reserved.
Data is provided for the purpose of product description only, and must not be construed as warranted characteristics in the legal sense. The information does not relieve users from the duty of conducting their own evaluations and tests. Because the products are subject to continual improvement, we reserve the right to amend the product specifications contained in this catalogue.

BUCHER hydraulics

WWW.SUMY.IR

Check valve
Spring loaded check

Q_{max} = 37 l/min, p_{max} = 350 bar
ball type, hydraulical operation
Type series: CVFB-08-...

- Screw-in cartridge valve
- For cavity C0820
- All external parts zinc plated, chromited (CrVI-free)
- Installation in threaded port body type B0820

Description

This unit is a screw-in cartridge style, guided ball, hydraulic check valve, for use as a blocking or load holding device for high pressure applications. This valve allows free flow from port 1 to port 2 and blocks flow from port 2 to port 1 or holding a load.

Symbol

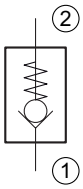

Technical data

General Characteristics	Description, value, unit
Function group	Check valve
Function	Spring loaded check
Design	Screw-in cartridge valve
Controls	hydraulical operation
Characteristic	ball type
Construction size	SAE 08 / nominal size 5
Thread size	3/4-16 UNF-2A
Mounting attitude	unrestricted
Weight	0.12 kg
Cavity acc. factory standard	For cavity C0820
Tightening torque steel	50.5 Nm
Tightening torque aluminium	37.5 Nm
Tightening torque tolerance	± 5 %
Minimum ambient temperature	- 30 °C
Maximum ambient temperature	+ 120 °C
Surface protection	All external parts zinc plated, chromited (CrVI-free)
Available seal types	several seal types available, see ordering code
Seal kit order number	NBR: SKN-0821 / FKM: SKV-0821

Hydraulic Characteristics	Description, value, unit
Maximum operating pressure	350 bar
Maximum flow rate	37 l/min
Flow direction	see symbol
Hydraulic fluid	All general purpose hydraulic fluids such as MIL-H-5606, SAE-#10, SAE-#20, etc.
Minimum fluid temperature	- 25 °C
Maximum fluid temperature	+ 80 °C
Viscosity range	10 ... 500 mm^2/s (cSt)
Recommended viscosity range	15 ... 250 mm^2/s (cSt)
Minimum fluid cleanliness (cleanlineless class according to ISO 4406:1999)	class 18/16/13
Internal leakage flow rate	5 drops/min maximum at 350 bar

Performance graphs

measured with oil viscosity 28.5 mm²/s (cSt)

Δp = f (Q) Pressure drop-flow rate characteristic

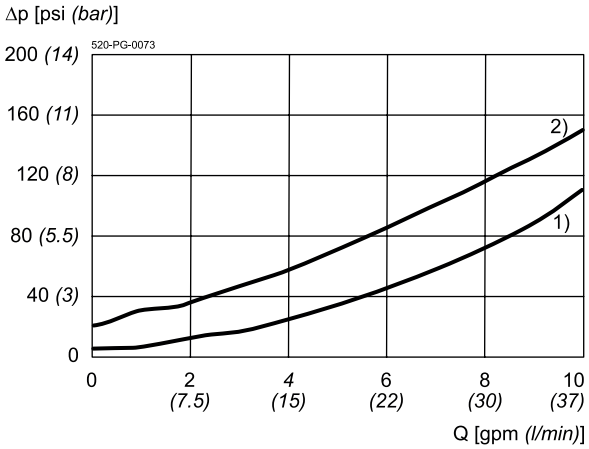

1) = p_N 5 psi *(0.35 bar)*
2) = p_N 25 psi *(1.8 bar)*

Dimensions and sectional view

Beispiel für die Masseinheit:
Example for the dimensional units:

.031 = 0.031" inch
(0.79) = 0.79 mm millimeter

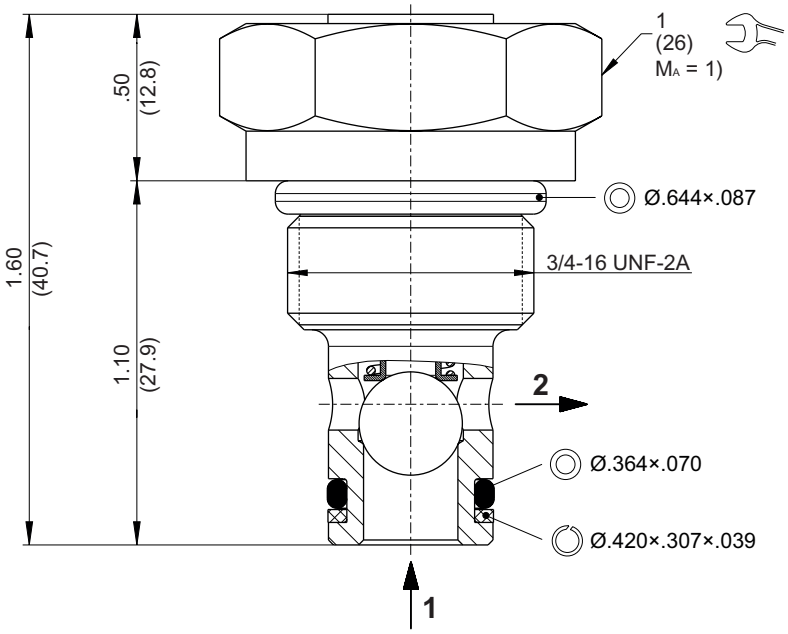

Installation information

ATTENTION!
Only qualified personnel with mechanical skills may carry out any maintenance work. Generally, the only work that should ever be undertaken is to check, and possibly replace, the seals. When changing seals, oil or grease the new seals thoroughly before fitting them.

NOTE!
The seals are not available individually. The seal kit order number can be found in the chapter "Technical data".

NOTE!
1) When fitting the screw-in cartridge valve, use the specified tightening torque. The value can be found in the chapter "Technical data".

Ordering code

e.g. CVFB - 08 - N - 0 - 005

CVFB = spring loaded check valve

08 = nominal size SAE 08 / NG 5

N = NBR (nitril-butadien-rubber / BUNA) seals *(standard)*
V = FKM (fluorocarbon rubber / VITON) seals
(special seals - please consult BUCHER)

0 = screw-in cartridge only
06TA = line-mounting body aluminum SAE #06 ports
06TS = line-mounting body steel SAE #06 ports

005 = opening pressure 5 psi
010 = opening pressure 10 psi
025 = opening pressure 25 psi
050 = opening pressure 50 psi

Related data sheets

Reference	Description
520-P-000050	Form tools
520-P-000110	Cavity C0820
520-P-000111	Threaded port body B0820

info.us@bucherhydraulics.com **www.bucherhydraulics.com**

© 2021 by Bucher Hydraulics Inc., Elgin, IL 60124, USA

All rights reserved.
Data is provided for the purpose of product description only, and must not be construed as warranted characteristics in the legal sense. The information does not relieve users from the duty of conducting their own evaluations and tests. Because the products are subject to continual improvement, we reserve the right to amend the product specifications contained in this catalogue.

BUCHER hydraulics

WWW.SUMY.IR

Check valve
Spring loaded check

Q_{max} = 68 l/min, p_{max} = 350 bar
ball type, hydraulical operation
Type series: CVFB-10-...

- Screw-in cartridge valve
- For cavity C1020
- All external parts zinc plated, chromited (CrVI-free)
- Installation in threaded port body type B1020

Description

This unit is a screw-in cartridge style, guided ball, hydraulic check valve, for use as a blocking or load holding device for high pressure applications. This valve allows free flow from port 1 to port 2 and blocks flow from port 2 to port 1 or holding a load.

Symbol

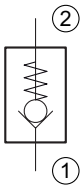

Technical data

General Characteristics	Description, value, unit
Function group	Check valve
Function	Spring loaded check
Design	Screw-in cartridge valve
Controls	hydraulical operation
Characteristic	ball type
Construction size	SAE 10 / nominal size 8
Thread size	7/8-14 UNF-2A
Mounting attitude	unrestricted
Weight	0.12 kg
Cavity acc. factory standard	For cavity C1020
Tightening torque steel	77.5 Nm
Tightening torque aluminium	50.5 Nm
Tightening torque tolerance	± 5 %
Minimum ambient temperature	- 30 °C
Maximum ambient temperature	+ 120 °C
Surface protection	All external parts zinc plated, chromited (CrVI-free)
Available seal types	several seal types available, see ordering code
Seal kit order number	NBR:SKN-1021 / FKM: SKV-1021

Hydraulic Characteristics	Description, value, unit
Maximum operating pressure	350 bar
Maximum flow rate	68 l/min
Flow direction	see symbol
Hydraulic fluid	All general purpose hydraulic fluids such as MIL-H-5606, SAE-#10, SAE-#20, etc.
Minimum fluid temperature	- 25 °C
Maximum fluid temperature	+ 80 °C
Viscosity range	10 ... 500 mm^2/s (cSt)
Recommended viscosity range	15 ... 250 mm^2/s (cSt)
Minimum fluid cleanliness (cleanlineless class according to ISO 4406:1999)	class 18/16/13
Internal leakage flow rate	5 drops/min maximum at 350 bar

Performance graphs

measured with oil viscosity 28.5 mm²/s (cSt)

Δp = f (Q) Pressure drop-flow rate characteristic

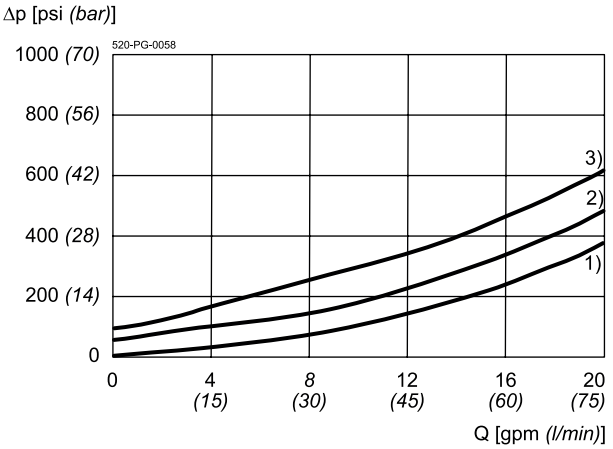

1) = p_N 15 psi *(1 bar)*
2) = p_N 60 psi *(4 bar)*
3) = p_N 95 psi *(6.6 bar)*

Dimensions and sectional view

Beispiel für die Masseinheit:
Example for the dimensional units:

.031 = 0.031" inch
(0.79) = 0.79 mm millimeter

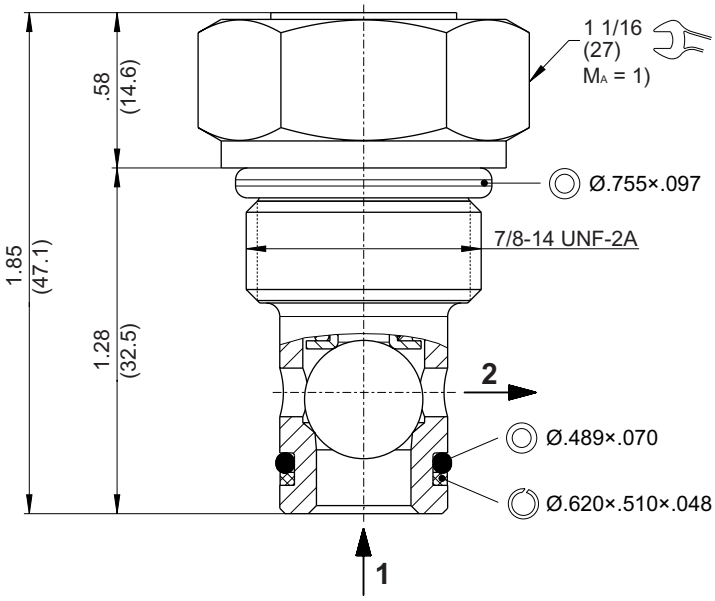

Installation information

ATTENTION!
Only qualified personnel with mechanical skills may carry out any maintenance work. Generally, the only work that should ever be undertaken is to check, and possibly replace, the seals. When changing seals, oil or grease the new seals thoroughly before fitting them.

NOTE!
The seals are not available individually. The seal kit order number can be found in the chapter "Technical data".

NOTE!
1) When fitting the screw-in cartridge valve, use the specified tightening torque. The value can be found in the chapter "Technical data".

Ordering code

e.g. CVFB - 10 - N - 0 - 005

CVFB = spring loaded check valve

10 = nominal size SAE 10 / NG 8

N = NBR (nitril-butadien-rubber / BUNA) seals *(standard)*
V = FKM (fluorocarbon rubber / VITON) seals
(special seals - please consult BUCHER)

0 = screw-in cartridge only
06TA = line-mounting body aluminum SAE #06 ports
06TS = line-mounting body steel SAE #06 ports
08TA = line-mounting body aluminum SAE #08 ports
08TS = line-mounting body steel SAE #08 ports

005 = opening pressure 5 psi
015 = opening pressure 15 psi
030 = opening pressure 30 psi
060 = opening pressure 60 psi
120 = opening pressure 120 psi

Related data sheets

Reference	Description
520-P-000050	Form tools
520-P-000120	Cavity C1020
520-P-000121	Threaded port body B1020

info.us@bucherhydraulics.com **www.bucherhydraulics.com**

© 2021 by Bucher Hydraulics Inc., Elgin, IL 60124, USA

All rights reserved.
Data is provided for the purpose of product description only, and must not be construed as warranted characteristics in the legal sense. The information does not relieve users from the duty of conducting their own evaluations and tests. Because the products are subject to continual improvement, we reserve the right to amend the product specifications contained in this catalogue.

BUCHER hydraulics

WWW.SUMY.IR

Check valve
Spring loaded check

Q_{max} = 120 l/min, p_{max} = 350 bar
direct acting, poppet type
Type series: RVPA-10-...

- Screw-in cartridge valve
- For cavity DC
- All external parts with zinc-nickel coating according to DIN EN ISO 19598
- Installation in threaded port body type DC-12
- High flow rates with low Δp
- Seat tight shut-off
- Various opening pressures

Description

The check valves, series RVP..., are size 10, screw-in valves with an M24x1,5 mounting thread. The poppet seat design ensures that the valves are leak-tight from B to A. Available are different types with a fixed opening pressure. All external parts of the screw-in valves are zinc-nickel plated, and are thus suitable for use in the harshest operating environments. These valves are mainly used in mobile and industrial applications where leak-free shut-off in one direction is important. For self-assembly, please refer to the section related data sheets.

Symbol

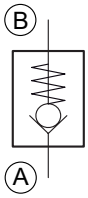

Technical data

General Characteristics	Description, value, unit
Function group	Check valve
Function	Spring loaded check
Design	Screw-in cartridge valve
Controls	direct acting
Characteristic	poppet type
Construction size	nominal size 10
Thread size	M24×1,5
Mounting attitude	unrestricted
Weight	0.2 kg
Cavity acc. factory standard	For cavity DC
Tightening torque steel	65 Nm
Tightening torque aluminium	65 Nm
Tightening torque tolerance	± 10 %
Minimum ambient temperature	- 25 °C
Maximum ambient temperature	+ 80 °C
Surface protection	All external parts with zinc-nickel coating according to DIN EN ISO 19598
Available seal types	several seal types available, see ordering code
Seal kit order number	NBR: DS-044-N / FKM: DS-044-V

Hydraulic Characteristics	Description, value, unit
Maximum operating pressure	350 bar
Maximum flow rate	120 l/min
Flow direction	see symbol
Hydraulic fluid	HL and HLP mineral oil according to DIN 51 524; other fluids on request!
Minimum fluid temperature	- 25 °C
Maximum fluid temperature	+ 80 °C
Viscosity range	10 ... 650 mm^2/s (cSt)
Recommended viscosity range	15 ... 250 mm^2/s (cSt)
Minimum fluid cleanliness (cleanlineless class according to ISO 4406:1999)	class 20/18/15
Opening pressure	0.6 / 1.0 / 1.6 / 2.5 / 4.0 / 6.3 bar

Performance graphs

measured with oil viscosity 33.0 mm²/s (cSt)

Δp = f (Q) Pressure drop-flow rate characteristic

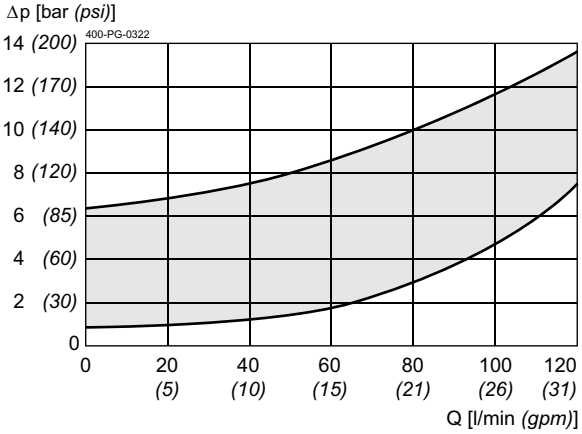

Dimensions and sectional view

Beispiel für die Masseinheit:
Example for the dimensional units:

0.79 = 0.79 mm millimeter
(.031) = 0.031" inch

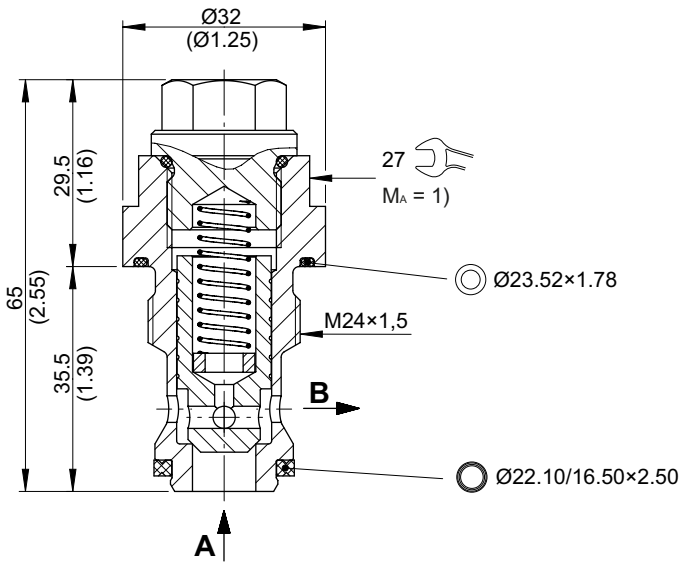

Installation information

NOTE!
1) When fitting the screw-in cartridge valve, use the specified tightening torque. The value can be found in the chapter "Technical data".

ATTENTION!
Only qualified personnel with mechanical skills may carry out any maintenance work. Generally, the only work that should ever be undertaken is to check, and possibly replace, the seals. When changing seals, oil or grease the new seals thoroughly before fitting them.

NOTE!
The seals are not available individually. The seal kit order number can be found in the chapter "Technical data".

Ordering code

Ex. RV P A - 10 - 06 _ - 2

RV	=	check valve
P	=	cartridge design
A ... Q	=	standard model according to valid data sheet *(standard)*
Z ... R	=	special model after consultation
10	=	nominal size 10
06	=	opening pressure 0.6 bar *(standard)*
10	=	opening pressure 1.0 bar
16	=	opening pressure 1.6 bar
25	=	opening pressure 2.5 bar
40	=	opening pressure 4.0 bar
63	=	opening pressure 6.3 bar
(blank)	=	NBR (nitril-butadien-rubber / BUNA) seals *(standard)*
V	=	FKM (fluorocarbon rubber / VITON) seals *(special seals - please consult BUCHER)*
1 ... 9	=	technical design no. (omit when ordering)

Related data sheets

Reference	Description
400-P-040011	Form tools
400-P-060111	Cavity DC
400-P-740101	Threaded port body DC-12

info.ch@bucherhydraulics.com **www.bucherhydraulics.com**

© 2021 by Bucher Hydraulics AG Frutigen, 3714 Frutigen, Switzerland

All rights reserved.
Data is provided for the purpose of product description only, and must not be construed as warranted characteristics in the legal sense. The information does not relieve users from the duty of conducting their own evaluations and tests. Because the products are subject to continual improvement, we reserve the right to amend the product specifications contained in this catalogue.

BUCHER hydraulics
WWW.SUMY.IR

Lock valve
Check valve

Q_{max} = 160 l/min, p_{max} = 500 bar
direct acting, poppet type,
Type series: RVP 16...

- Screw-in cartridge valve
- All external parts burnished
- High-pressure model
- Hardened precision fitted poppet and cage provides reliable and long life
- Various opening pressures
- High flow rates with low Δp

Description

Series RVP... check valves are size 16, high performance screw-in valves with an M30×1.5 mounting thread. The valves are designed on the proven poppet/seat principle and are leak-tight in the flow direction B to A. Different variants with a fixed opening pressure are available. All external parts of the screw-in valves are burnished, allowing them to be stored and used indoors without restriction. These valves are predominantly used in mobile and industrial applications where leak-free shut-off in one direction is important.

Symbol

Technical data

General characteristics	Description, value, unit
Product status	Obsolete
Function group	Lock valve
Function	Check valve

General characteristics	Description, value, unit
Design	Screw-in cartridge valve
Characteristic	direct acting, poppet type
Construction size	size 16
Thread size	M30×1,5
Mounting attitude	unrestricted
Weight	0.15 kg
Tightening torque steel	70 Nm
Tightening torque tolerance	± 10 %
Minimum ambient temperature	- 25 °C
Maximum ambient temperature	+ 100 °C
Surface protection	All external parts burnished
Sealing material	see ordering code
Seal kit order number	NBR: 3000302374 / FKM: 3000302375 / MIL: 3000302376

Hydraulic characteristics	Description, value, unit
Maximum operating pressure	500 bar
Maximum flow rate	160 l/min
Flow direction	see symbol
Hydraulic fluid	HL and HLP mineral oil according to DIN 51 524; other fluids on request!
Minimum fluid temperature	- 20 °C
Maximum fluid temperature	+ 80 °C
Viscosity range	10 ... 650 mm^2/s (cSt)
Recommended viscosity range	15 ... 250 mm^2/s (cSt)
Minimum fluid cleanliness (cleanlineless class according to ISO 4406:1999)	class 20/18/15
Opening pressure	0.3 / 1 / 15 / 20 bar

Performance graphs

measured with oil viscosity 33.0 mm²/s (cSt)

Δp = f (Q) Pressure drop-flow rate characteristic

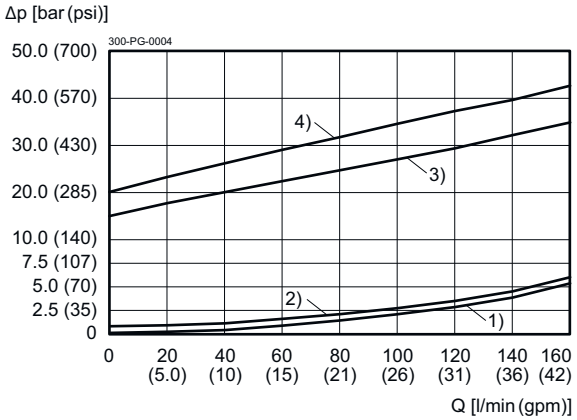

1) = RVP 16/0.3
2) = RVP 16/1
3) = RVP 16/15
4) = RVP 16/20

Dimensions and sectional view

Beispiel für die Masseinheit: Example for the dimensional units:		
0.79	= 0.79 mm	millimeter
(.031)	= 0.031"	inch

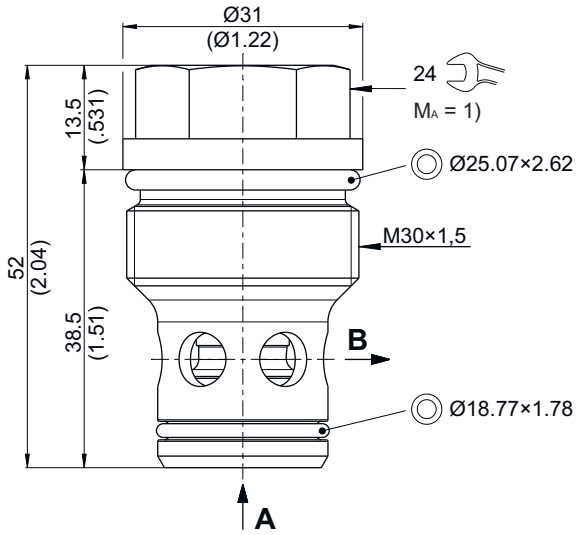

Installation information

NOTE!
1) When fitting the screw-in cartridge valve, use the specified tightening torque. The value can be found in the chapter "Technical data".

NOTE!
The seals are not available individually. The seal kit order number can be found in the chapter "Technical data".

ATTENTION!
Only qualified personnel with mechanical skills may carry out any maintenance work. Generally, the only work that should ever be undertaken is to check, and possibly replace, the seals. When changing seals, oil or grease the new seals thoroughly before fitting them.

Cavity

Beispiel für die Masseinheit:
Example for the dimensional units:

0.79 = 0.79 mm millimeter

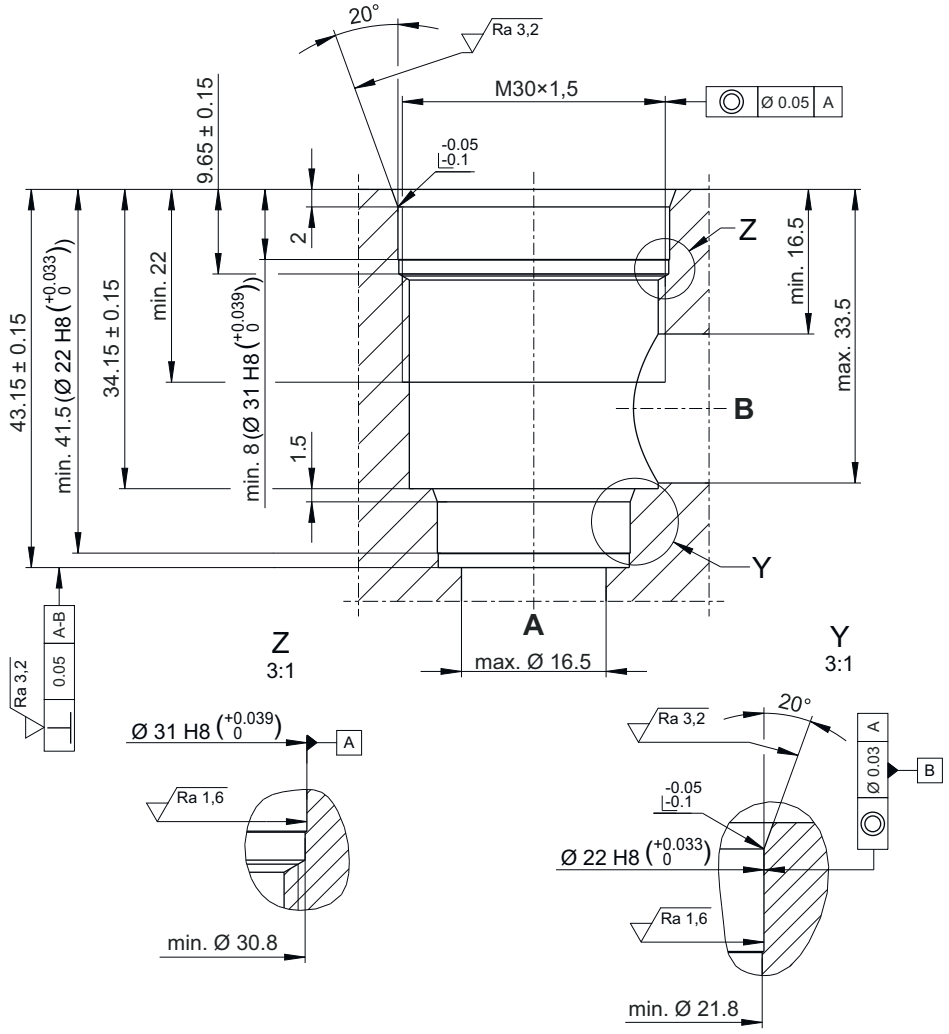

HINWEIS!
NOTE!

Empfohlene Anschlussbohrungen:
Recommended connection bores: A, B: Ø 16

Toleranzen nach:
Tolerances according to: DIN ISO 2768-mK

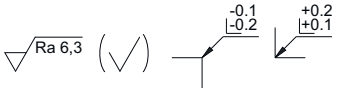

NOTE!
You must maintain the specified positional and diametral tolerances. To ensure trouble-free operation of the screw-in cartridges, we strongly recommend that pilot drilling, boring, reaming and cavity thread-cutting are always performed in one setup.

BUCHER hydraulics
WWW.SUMY.IR

Ordering code

Ex. RVP 16 / 0.3 / N

RVP = check valve, cartridge design

16 = size 16

0.3 = opening pressure 0.3 bar / 4.3 psi
1 = opening pressure 1 bar / 15 psi
15 = opening pressure 15 bar / 215 psi
20 = opening pressure 20 bar / 285 psi

N = NBR (nitril-butadien-rubber / BUNA) seals *(standard)*
V = FKM (fluorocarbon rubber / VITON) seals
T = MIL (low temperature) seals
(special seals - please consult BUCHER)

info.ch@bucherhydraulics.com **www.bucherhydraulics.com**

© 2025 by Bucher Hydraulics AG, 6345 Neuheim, Switzerland

All rights reserved.
Data is provided for the purpose of product description only, and must not be construed as warranted characteristics in the legal sense. The information does not relieve users from the duty of conducting their own evaluations and tests. Because the products are subject to continual improvement, we reserve the right to amend the product specifications contained in this catalogue.

BUCHER hydraulics
WWW.SUMY.IR

Lock valve
Check valve

Q_{max} = 250 l/min, p_{max} = 500 bar
direct acting, poppet type,
Type series: RVP 22...

- Screw-in cartridge valve
- All external parts burnished
- High-pressure model
- Hardened precision fitted poppet and cage provides reliable and long life
- Various opening pressures
- High flow rates with low Δp

Description

Series RVP... check valves are size 22, high performance screw-in valves with an M42×1.5 mounting thread. The valves are designed on the proven poppet/seat principle and are leak-tight in the flow direction B to A. Different variants with a fixed opening pressure are available. All external parts of the screw-in valves are burnished, allowing them to be stored and used indoors without restriction. These valves are predominantly used in mobile and industrial applications where leak-free shut-off in one direction is important.

Symbol

WWW.SUMY.IR

Technical data

General characteristics	Description, value, unit
Product status	Obsolete
Function group	Lock valve
Function	Check valve
Design	Screw-in cartridge valve
Characteristic	direct acting, poppet type
Construction size	size 22
Thread size	M42×1,5
Mounting attitude	unrestricted
Weight	0.4 kg
Tightening torque steel	90 Nm
Tightening torque tolerance	± 10 %
Minimum ambient temperature	- 25 °C
Maximum ambient temperature	+ 100 °C
Surface protection	All external parts burnished
Sealing material	see ordering code
Seal kit order number	NBR: 3000300118 / FKM: 3000300121 / MIL: 3000301405

Hydraulic characteristics	Description, value, unit
Maximum operating pressure	500 bar
Maximum flow rate	250 l/min
Flow direction	see symbol
Hydraulic fluid	HL and HLP mineral oil according to DIN 51 524; other fluids on request!
Minimum fluid temperature	- 20 °C
Maximum fluid temperature	+ 80 °C
Viscosity range	10 ... 650 mm^2/s (cSt)
Recommended viscosity range	15 ... 250 mm^2/s (cSt)
Minimum fluid cleanliness (cleanlineless class according to ISO 4406:1999)	class 20/18/15
Opening pressure	0.3 / 1 / 15 / 20 bar

Performance graphs

measured with oil viscosity 33.0 mm²/s (cSt)

Δp = f (Q) Pressure drop-flow rate characteristic

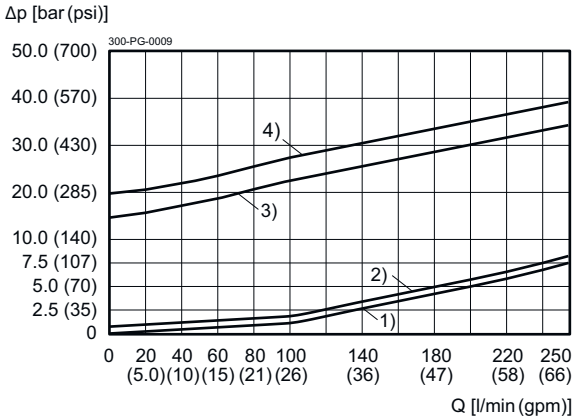

1) = RVP 22/0.3
2) = RVP 22/1
3) = RVP 22/15
4) = RVP 22/20

Dimensions and sectional view

Beispiel für die Masseinheit:
Example for the dimensional units:

0.79	= 0.79 mm	millimeter
(.031)	= 0.031"	inch

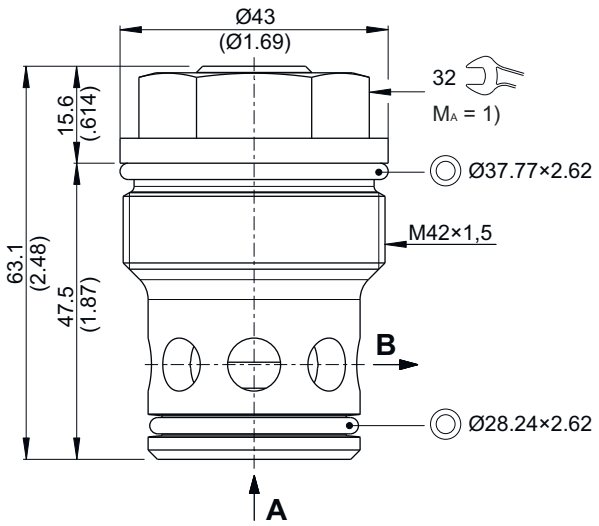

Installation information

NOTE!
1) When fitting the screw-in cartridge valve, use the specified tightening torque. The value can be found in the chapter "Technical data".

NOTE!
The seals are not available individually. The seal kit order number can be found in the chapter "Technical data".

ATTENTION!
Only qualified personnel with mechanical skills may carry out any maintenance work. Generally, the only work that should ever be undertaken is to check, and possibly replace, the seals. When changing seals, oil or grease the new seals thoroughly before fitting them.

Cavity

Beispiel für die Masseinheit:
Example for the dimensional units:
0.79 = 0.79 mm millimeter

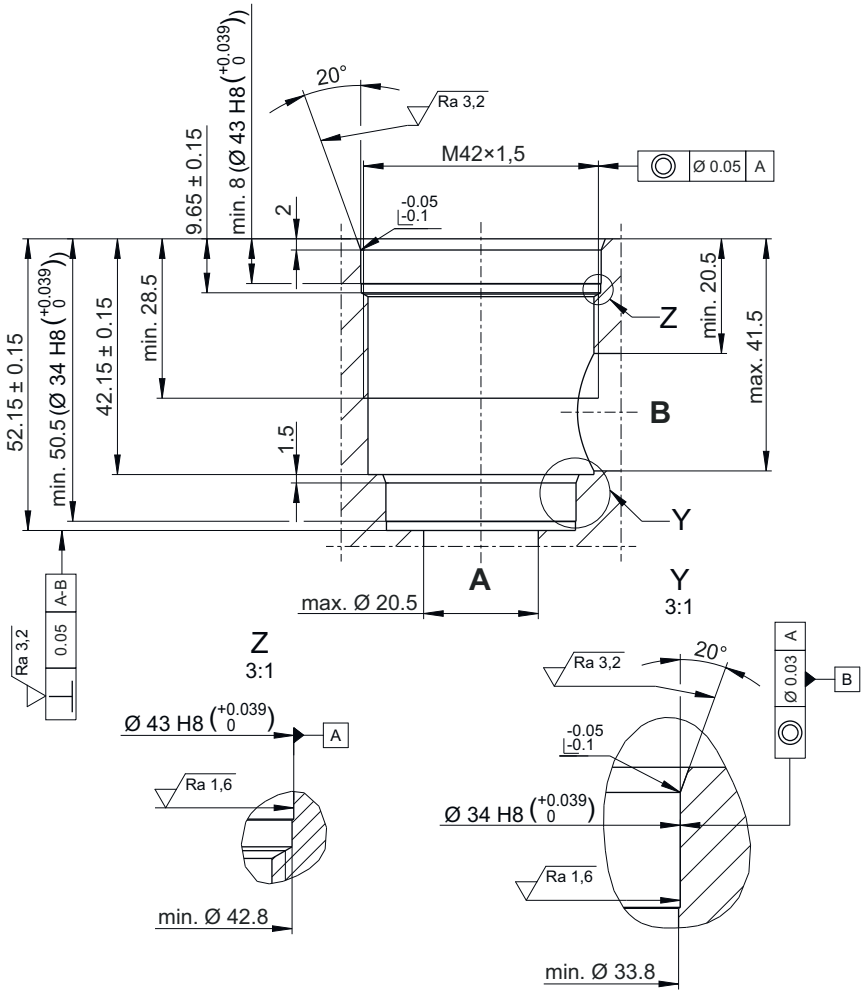

HINWEIS!
NOTE!

Empfohlene Anschlussbohrungen:
Recommended connection bores: A, B: Ø 20

Toleranzen nach:
Tolerances according to: DIN ISO 2768-mK

Ra 6,3 (√) -0.1 -0.2 +0.2 +0.1

NOTE!
You must maintain the specified positional and diametral tolerances. To ensure trouble-free operation of the screw-in cartridges, we strongly recommend that pilot drilling, boring, reaming and cavity thread-cutting are always performed in one setup.

WWW.SUMY.IR

Ordering code

Ex. RVP 22 / 0.3 / N

RVP = check valve, cartridge design

22 = size 22

0.3 = opening pressure 0.3 bar / 4.3 psi
1 = opening pressure 1 bar / 15 psi
15 = opening pressure 15 bar / 215 psi
20 = opening pressure 20 bar / 285 psi

N = NBR (nitril-butadien-rubber / BUNA) seals *(standard)*
V = FKM (fluorocarbon rubber / VITON) seals
T = MIL (low temperature) seals
(special seals - please consult BUCHER)

info.ch@bucherhydraulics.com **www.bucherhydraulics.com**

© 2025 by Bucher Hydraulics AG, 6345 Neuheim, Switzerland

All rights reserved.
Data is provided for the purpose of product description only, and must not be construed as warranted characteristics in the legal sense. The information does not relieve users from the duty of conducting their own evaluations and tests. Because the products are subject to continual improvement, we reserve the right to amend the product specifications contained in this catalogue.

Cavity Type C0825

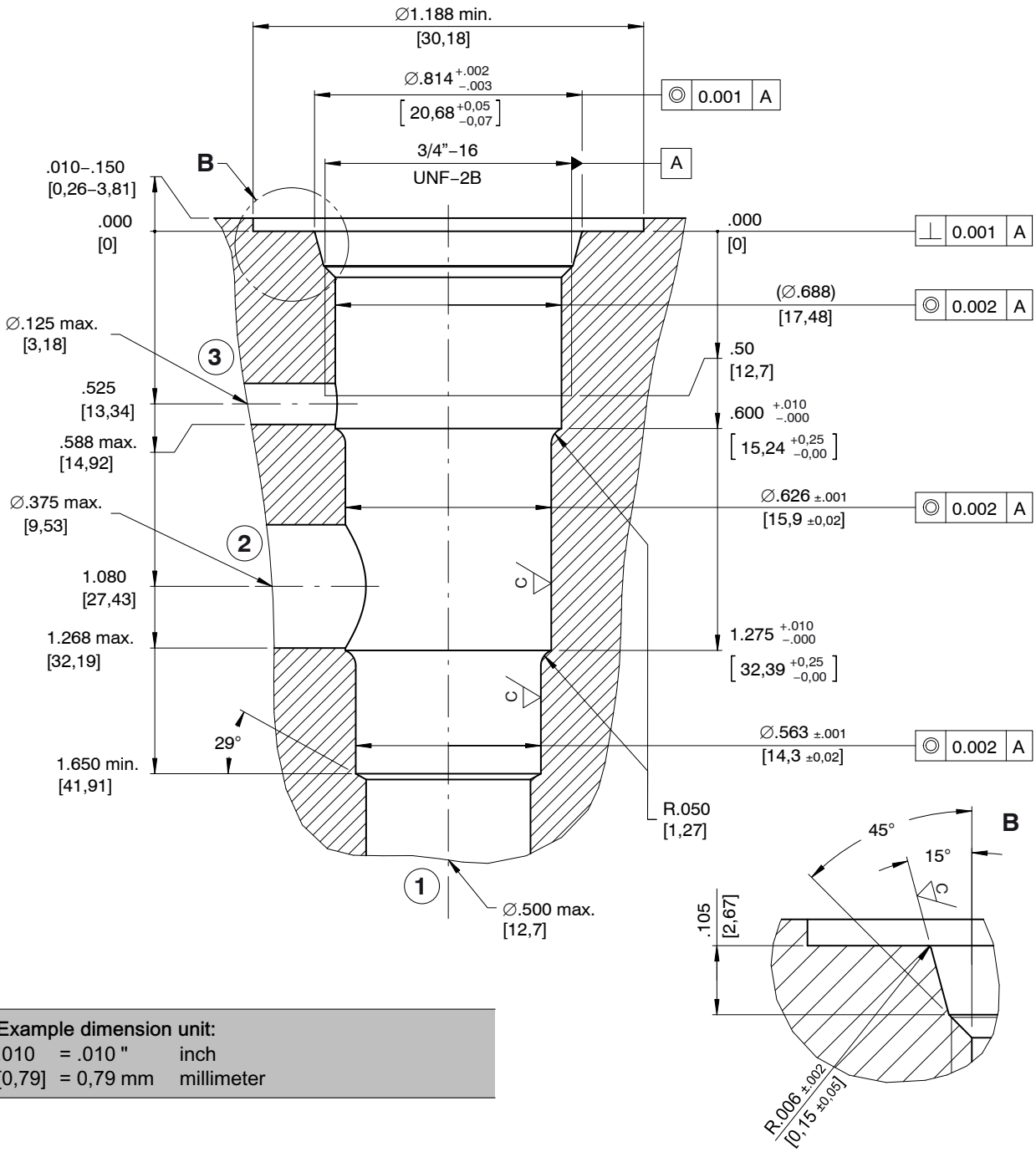

Example dimension unit:		
.010	= .010 "	inch
[0,79]	= 0,79 mm	millimeter

Dimension Tolerances	
Unless otherwise specified	
0.000	± .005″
0.00	± .010″
Angles	± 1/2°

Surface roughness		
Ra	C	D
	45 µin	125 µin
	(1.15 µm)	(3.2 µm)
	D	Unless otherwise specified

Reference: 520-P-000210-EN-01

WWW.SUMY.IR

1 Related data sheets

Reference	(Old no.)	Description
520-P-000050		The form-tool selling programme
520-P-000211	(0–021.1)	Line-mounting body, 8 Series – 2.5-way
520-P-000260	(0–026.0)	Line-mounting body dual, 8 Series – 2.5-way

info.el@bucherhydraulics.com www.bucherhydraulics.com/commoncavity

© 2016 by Bucher Hydraulics, Inc., 2545 Northwest Parkway, Elgin, Illinois 60124, USA
All rights reserved.
Data is provided for the purpose of product description only, and must not be construed as warranted characteristics in the legal sense. The information does not relieve users from the duty of conducting their own evaluations and tests. Because the products are subject to continual improvement, we reserve the right to amend the product specifications contained in this catalogue.

Classification: 430.Cavity.…

POCI-08

BUCHER hydraulics

PILOT OPERATED CHECK VALVE POPPET TYPE, PILOT TO OPEN, 3 TO 1 PILOT RATIO

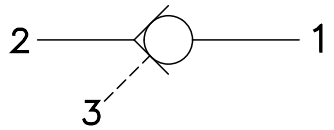

TORQUE:
Steel = 35/40 Ft–Lb. [47/54 Nm]
Aluminum = 25/30 Ft–Lb. [34/41 Nm]

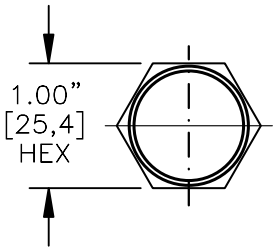

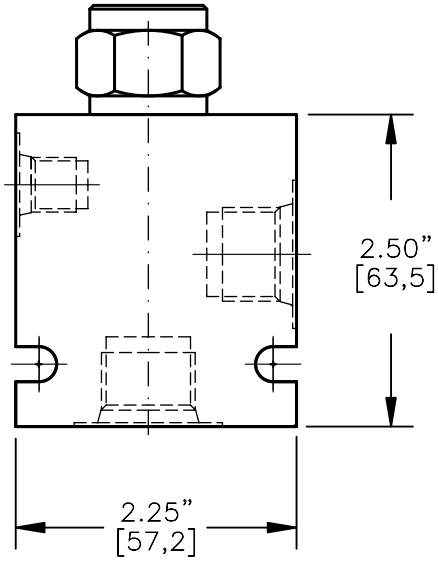

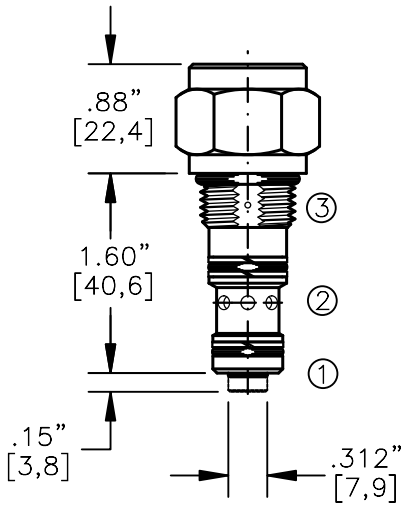

NOTE: CAVITY BOTTOM HOLE MUST ALLOW FOR POPPET EXTENSION (.500 DIA.).
FOR ALUMINUM OR STEEL VALVE HOUSING CONFIGURATIONS SEE PAGE 0–021–1.

POCI–08–X–F–X–XXX

BASIC

SIZE
08 = 3/4"–16 UNF

SEALS
N = BUNA "N"
V = VITON

ADJUSTMENT
F = FIXED

PORTS
0 = CARTRIDGE ONLY
03BX = G 3/8" BSPP
08TX = SAE – #8
"A" – ALUM. HOUSING
"S" – STEEL HOUSING

CRACK PRESSURE
010 = 10 PSI
030 = 30 PSI
060 = 60 PSI

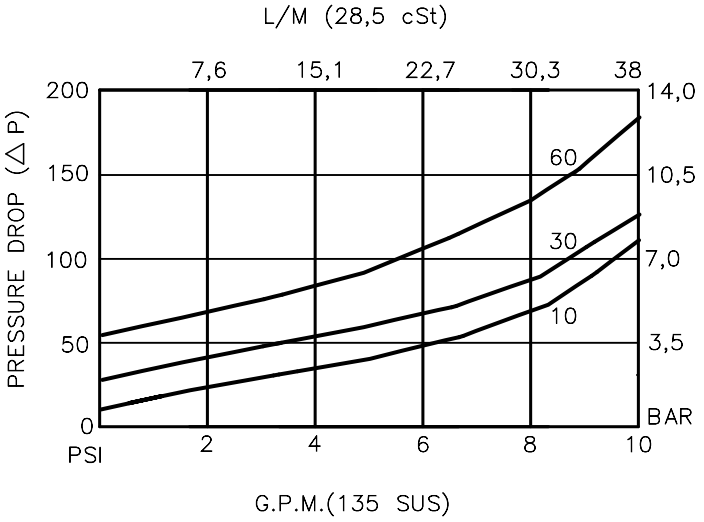

BUCHER hydraulics

PILOT OPERATED CHECK VALVE POPPET TYPE, PILOT TO OPEN, 3 TO 1 PILOT RATIO.

DESCRIPTION

This unit is a SCREW IN, cartridge type, guided poppet, hydraulic pilot operated check valve, for use as a blocking or load holding device for high pressure applications.

OPERATIONS

This valve allows free flow from port 2 to port 1 and blocks flow from port 1 to port 2 or holding a load. Flow will be allowed from port 1 to port 2 when pressure is applied to port 3. This pilot operated check valve has a 3 to 1 pilot ratio, meaning that it takes at least one-third of the load pressure held at port 1 that is required at port 3 to open the valve.

FEATURES AND BENEFITS

A low friction seal on pilot piston is standard.
A seperate heavy spring assures fast return of the pilot piston for a very quick, reliable and positve valve re-seat.
All external carbon steel parts are plated for longer life against the elements.
All cartridge valves are 100% functionally tested.
Industry common cavity.

SPECIFICATIONS

OPERATING PRESSURE: 5,000 PSI [350 Bar]
PROOF PRESSURE: 10,000 PSI [700 Bar]
FLOW: 10.0 GPM [38 l/m] nominal. See performance chart.
PILOT RATIO: 3 TO 1
INTERNAL LEAKAGE: 5 drops per minute maximum @ 5,000 PSI [350 Bar]
VALVE HOUSINGS: 2500 PSI [175 Bar] = Aluminum - Anodized.
5000 PSI [350 Bar] = Steel - Unplated.
OPERATING TEMPERATURE: -40° to +250° F. [-40° to +120° C.]
OPERATING MEDIA: All general purpose hydraulic fluids such as MIL-H-5606, SAE-#10, SAE-#20, etc.
INSTALLATION: No restrictions.
SEAL KIT: SKN-0828 Buna "N"
SKV-0828 Viton
WEIGHT: .26 lb [.12 kg] cartridge only.
VALVE CAVITY: #C0825, See Page 0-021.0.

info.el@bucherhydraulics.com www.bucherhydraulics.com/commoncavity

© 2015 by Bucher Hydraulics, Inc., 2545 Northwest Parkway, Elgin, Illinois 60124, USA
All rights reserved.
Data is provided for the purpose of product description only, and must not be construed as warranted characteristics in the legal sense. The information does not relieve users from the duty of conducting their own evaluations and tests. Because the products are subject to continual improvement, we reserve the right to amend the product specifications contained in this catalogue.

BUCHER hydraulics
WWW.SUMY.IR

General information
Cavity

Type series: C1025

Dimensions and sectional view

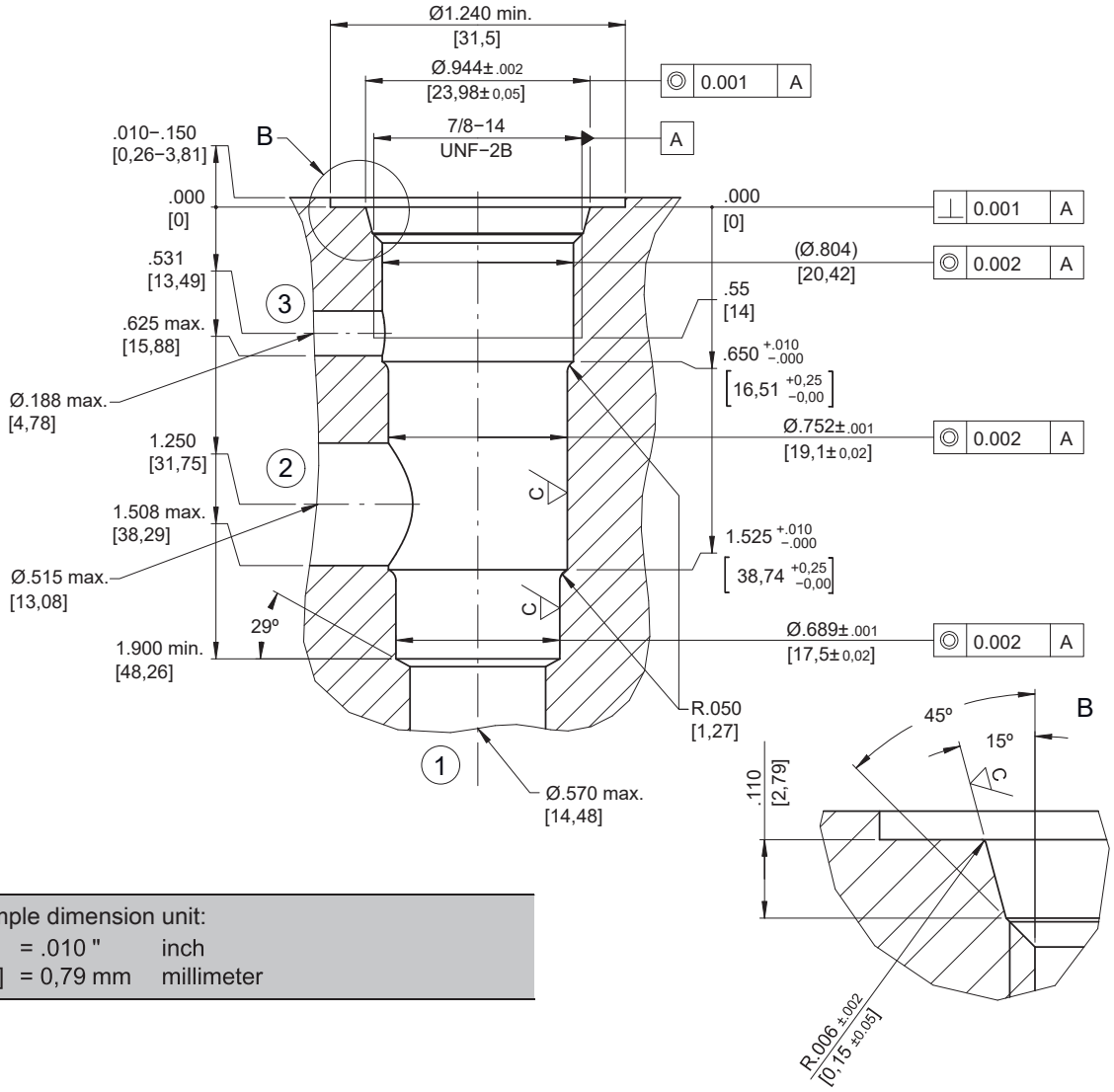

Example dimension unit:		
.010	= .010 "	inch
[0,79]	= 0,79 mm	millimeter

Dimension Tolerances	
Unless otherwise specified	
0.000	± .005″
0.00	± .010″
Angles	± 1/2°

Surface roughness		
Ra	C	D
	45 µin	125 µin
	(1.15 µm)	(3.2 µm)
	D	Unless otherwise specified

Installation information

ATTENTION!
You must maintain the specified positional and diametral tolerances. To ensure trouble-free operation of the screw-in cartridges, we strongly recommend that pilot drilling, boring, reaming and cavity thread-cutting are always performed in one setup.

NOTE!
Cavity type to factory standard.

NOTE!
We offer form tool sets for sale or hire. See data sheet 520-P-000050 for further information.

info.us@bucherhydraulics.com **www.bucherhydraulics.com**

© 2025 by Bucher Hydraulics Inc., Elgin, IL 60124, USA

All rights reserved.
Data is provided for the purpose of product description only, and must not be construed as warranted characteristics in the legal sense. The information does not relieve users from the duty of conducting their own evaluations and tests. Because the products are subject to continual improvement, we reserve the right to amend the product specifications contained in this catalogue.

BUCHER hydraulics

PILOT OPERATED CHECK VALVE POPPET TYPE, PILOT TO OPEN, 3 TO 1 PILOT RATIO.

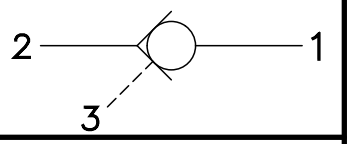

TORQUE:
Steel = 55/60 Ft–Lb. [74/81 Nm]
Aluminum = 35/40 Ft–Lb. [47/54 Nm]

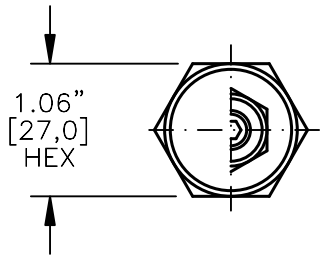

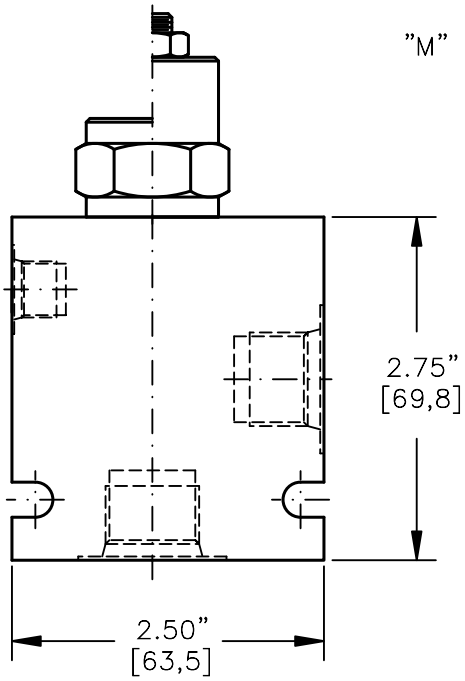

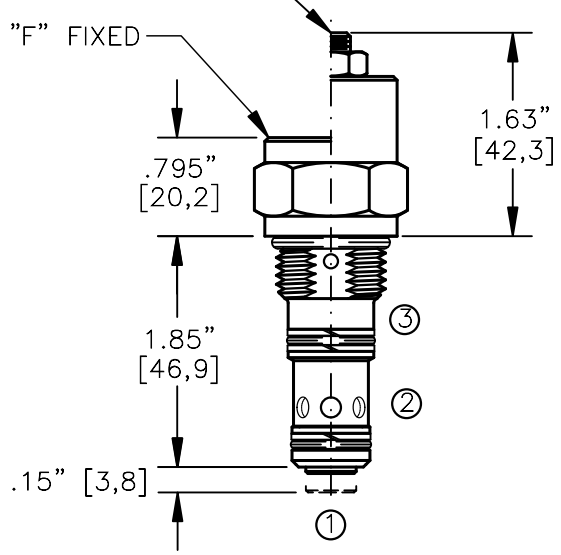

NOTE: CAVITY BOTTOM HOLE MUST ALLOW FOR POPPET EXTENSIONS (.563 DIA.)
FOR ALUMINUM OR STEEL VALVE HOUSING CONFIGURATIONS SEE PAGE 0–022–1.

POCI–10–X–X–X–XXX

BASIC

SIZE
10 = 7/8"–14 UNF

SEALS
N = BUNA "N"
V = VITON

ADJUSTMENT
F = FIXED
M = MANUAL RELEASE

PORTS
0 = CARTRIDGE ONLY
02BX = G 1/4" BSPP
03BX = G 3/8" BSPP
06TX = SAE – #6
08TX = SAE – #8
"A" – ALUM. HOUSING
"S" – STEEL HOUSING

CRACK PRESSURE
010 = 10 PSI
030 = 30 PSI
060 = 60 PSI

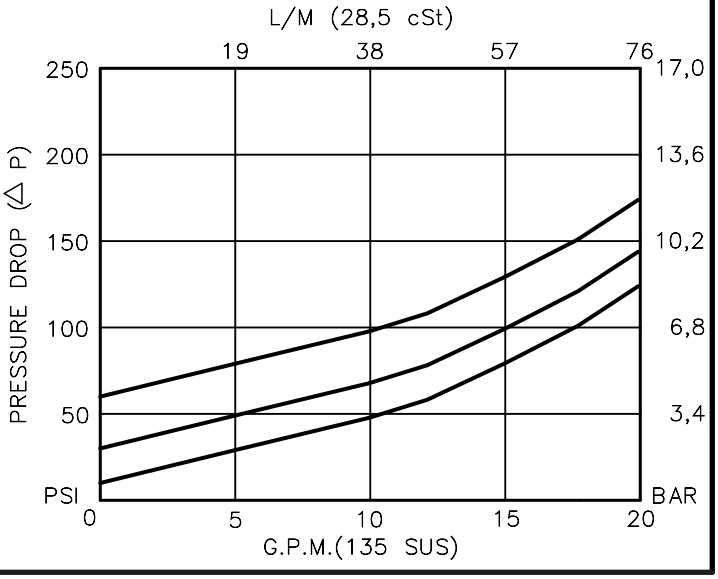

BUCHER hydraulics

PILOT OPERATED CHECK VALVE

POPPET TYPE, PILOT TO OPEN, 3 TO 1 PILOT RATIO.

DESCRIPTION

This unit is a SCREW IN, cartridge type, guided poppet, hydraulic pilot operated check valve, for use as a blocking or load holding device for high pressure applications.

OPERATIONS

This valve allows free flow from port 2 to port 1 and blocks flow from port 1 to port 2 or holding a load. Flow will be allowed from port 1 to port 2 when pressure is applied to port 3. This pilot operated check valve has a 3 to 1 pilot ratio, meaning that it takes at least one-third of the load pressure held at port 1 that is required at port 3 to open the valve.

FEATURES AND BENEFITS

A low friction seal on pilot piston is standard.
A seperate heavy spring assures fast return of the pilot piston for a very quick, reliable and positve valve re-seat.
Optional screw type manual load release is available.
All external carbon steel parts are plated for longer life against the elements.
All cartridge valves are 100% functionally tested.
Industry common cavity.

SPECIFICATIONS

OPERATING PRESSURE: 5,000 PSI [350 Bar]
PROOF PRESSURE: 10,000 PSI [700 Bar]
FLOW: 18.0 GPM [70 l/m] nominal. See performance chart.
PILOT RATIO: 3 TO 1
INTERNAL LEAKAGE: 5 drops per minute maximum @ 5,000 PSI [350 Bar]
VALVE HOUSINGS: 2500 PSI [175 Bar] = Aluminum - Anodized.
5000 PSI [350 Bar] = Steel - Unplated.
OPERATING TEMPERATURE: -40° to +250° F. [-40° to +120° C.]
OPERATING MEDIA: All general purpose hydraulic fluids such as MIL-H-5606, SAE-#10, SAE-#20, etc.
INSTALLATION: No restrictions.
SEAL KIT: SKN-1028 Buna "N"
SKV-1028 Viton
WEIGHT: .39 lb [.18 kg] cartridge only.
VALVE CAVITY: #C1025, See Page 0-022.0.

info.el@bucherhydraulics.com www.bucherhydraulics.com/commoncavity

© 2015 by Bucher Hydraulics, Inc., 2545 Northwest Parkway, Elgin, Illinois 60124, USA
All rights reserved.
Data is provided for the purpose of product description only, and must not be construed as warranted characteristics in the legal sense. The information does not relieve users from the duty of conducting their own evaluations and tests. Because the products are subject to continual improvement, we reserve the right to amend the product specifications contained in this catalogue.

Cavity Type C1225

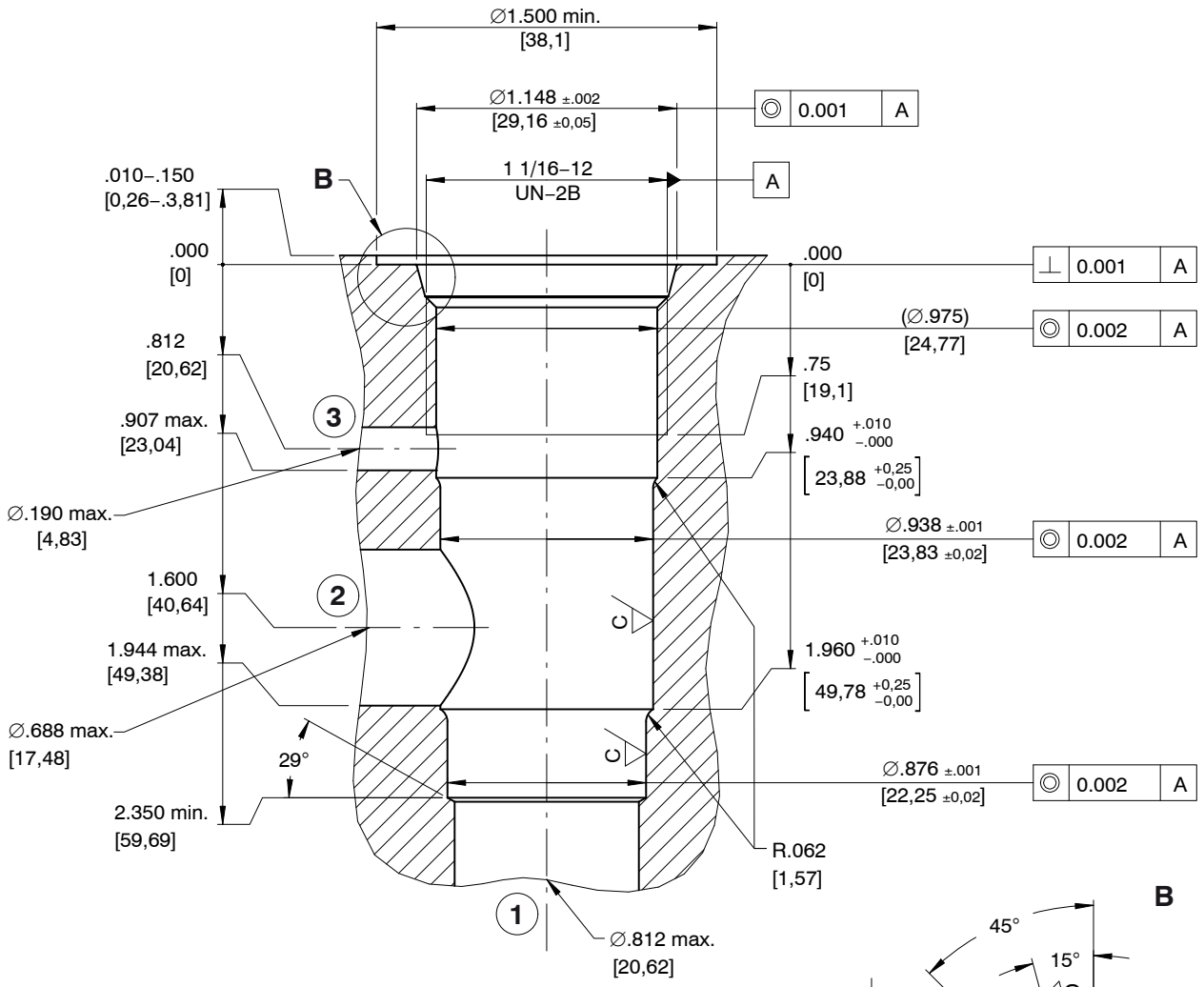

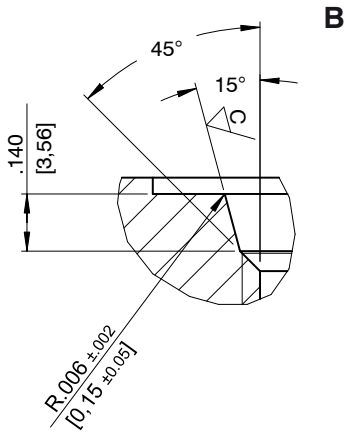

Example dimension unit:		
.010	= .010 "	inch
[0,79]	= 0,79 mm	millimeter

Dimension Tolerances	
Unless otherwise specified	
0.000	± .005″
0.00	± .010″
Angles	± 1/2°

Surface roughness		
Ra	C	D
	45 µin	125 µin
	(1.15 µm)	(3.2 µm)
	D	Unless otherwise specified

Reference: 520-P-000230-EN-01

WWW.SUMY.IR

1 Related data sheets

Reference	(Old no.)	Description
520-P-000050		The form-tool selling programme
520-P-000231	(0–023.1)	Line-mounting body, 12 Series – 2.5-way
520-P-000232		Line-mounting body dual, 12 Series – 2.5-way

info.el@bucherhydraulics.com www.bucherhydraulics.com/commoncavity

© 2016 by Bucher Hydraulics, Inc., 2545 Northwest Parkway, Elgin, Illinois 60124, USA
All rights reserved.
Data is provided for the purpose of product description only, and must not be construed as warranted characteristics in the legal sense. The information does not relieve users from the duty of conducting their own evaluations and tests. Because the products are subject to continual improvement, we reserve the right to amend the product specifications contained in this catalogue.

Classification: 430.Cavity.…

POCI-12

BUCHER hydraulics

PILOT OPERATED CHECK VALVE POPPET TYPE, PILOT TO OPEN, 3 TO 1 PILOT RATIO.

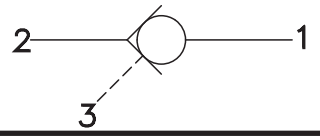

TORQUE:
Steel = 70/75 Ft–Lb. [95/102 Nm]
Aluminum = 55/60 Ft–Lb. [74/81 Nm]

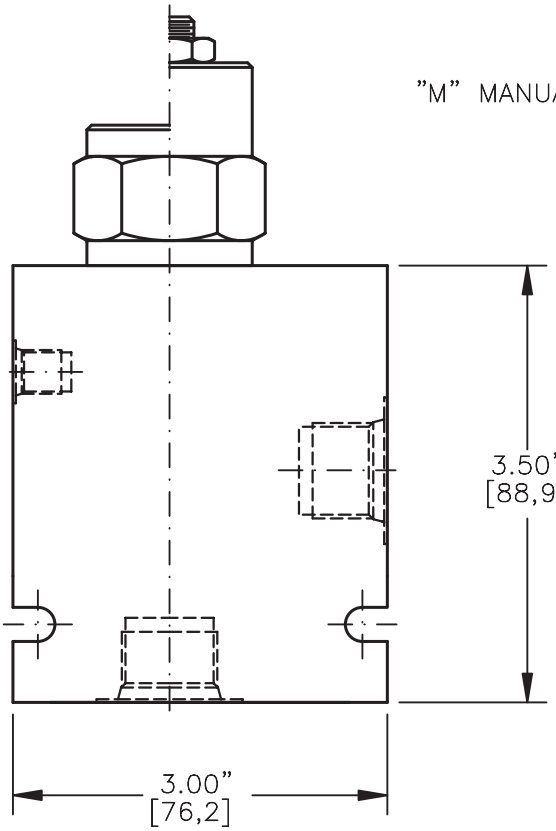

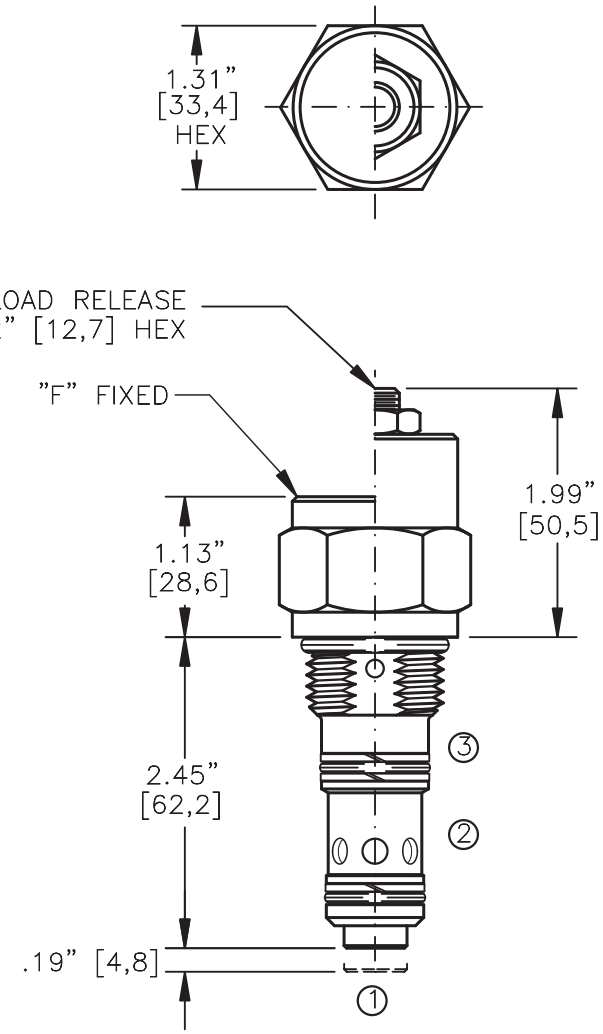

NOTE: CAVITY BOTTOM HOLE MUST ALLOW FOR POPPET EXTENSION (.750 DIA.).
FOR ALUMINUM OR STEEL VALVE HOUSING CONFIGURATIONS SEE PAGE 0–023–1.

POCI–12–X–X–X–XXX

BASIC

SIZE
12 = 1.062"–12 UNF

SEALS
N = BUNA "N"
V = VITON

ADJUSTMENT
F = FIXED
M = MANUAL RELEASE

PORTS
0 = CARTRIDGE ONLY
04BX = G 1/2" BSPP
06BX = G 3/4" BSPP
10TX = SAE – #10
12TX = SAE – #12
"A" – ALUM. HOUSING
"S" – STEEL HOUSING

CRACK PRESSURE
010 = 10 PSI
030 = 30 PSI
060 = 60 PSI

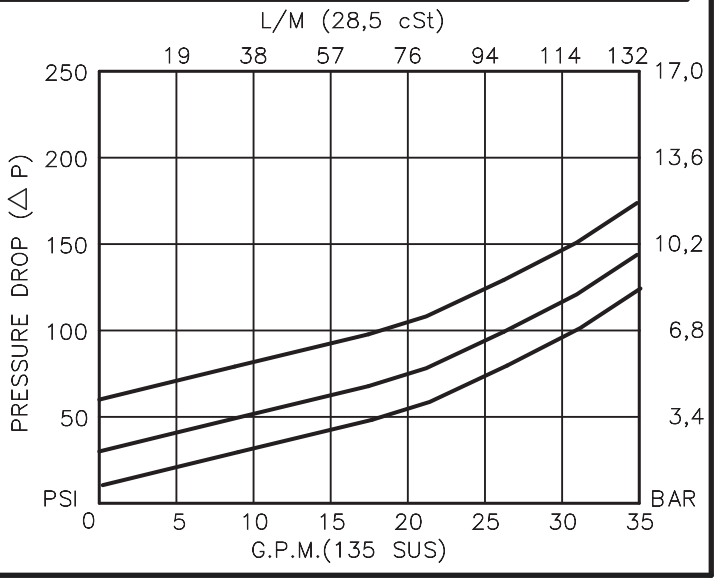

BUCHER hydraulics

PILOT OPERATED CHECK VALVE
POPPET TYPE, PILOT TO OPEN, 3 TO 1 PILOT RATIO.

DESCRIPTION

This unit is a SCREW IN, cartridge type, guided poppet, hydraulic pilot operated check valve, for use as a blocking or load holding device for high pressure applications.

OPERATIONS

This valve allows free flow from port 2 to port 1 and blocks flow from port 1 to port 2 or holding a load. Flow will be allowed from port 1 to port 2 when sufficient pilot pressure is applied to port 3. This pilot operated check valve has a 3 to 1 pilot ratio, meaning that it takes at least one-third of the load pressure held at port 1 that is required at port 3 to open the valve.

FEATURES AND BENEFITS

A low friction seal on pilot piston is standard.
A seperate heavy spring assures fast return of the pilot piston for a very quick, reliable and positve valve re-seat.
Optional screw type manual load release is available.
All external carbon steel parts are plated for longer life against the elements.
All cartridge valves are 100% functionally tested.

SPECIFICATIONS

OPERATING PRESSURE: 5,000 PSI [350 Bar]
PROOF PRESSURE: 10,000 PSI [700 Bar]
FLOW: 35.0 GPM [132.4 l/m] nominal. See performance chart.
PILOT RATIO: 3 TO 1
INTERNAL LEAKAGE: 5 drops per minute maximum @ 5,000 PSI [350 Bar]
VALVE HOUSINGS: 2500 PSI [175 Bar] = Aluminum - Anodized.
5000 PSI [350 Bar] = Steel - Unplated.
OPERATING TEMPERATURE: -40° to +250° F. [-40° to +120° C.]
OPERATING MEDIA: All general purpose hydraulic fluids such as MIL-H-5606, SAE-#10, SAE-#20, etc.
INSTALLATION: No restrictions.
SEAL KIT: SKN-1228 Buna "N"
SKV-1228 Viton
WEIGHT: 0.63 lb [0,25 kg] cartridge only.
VALVE CAVITY: #C1225, See Page 0-023.0.

info.el@bucherhydraulics.com
www.bucherhydraulics.com/commoncavity

© 2015 by Bucher Hydraulics, Inc., 2545 Northwest Parkway, Elgin, Illinois 60124, USA
All rights reserved.
Data is provided for the purpose of product description only, and must not be construed as warranted characteristics in the legal sense. The information does not relieve users from the duty of conducting their own evaluations and tests. Because the products are subject to continual improvement, we reserve the right to amend the product specifications contained in this catalogue.

POCX-08

BUCHER hydraulics

PILOT OPERATED CHECK VALVE POPPET TYPE, PILOT TO OPEN, 3 TO 1 PILOT RATIO.

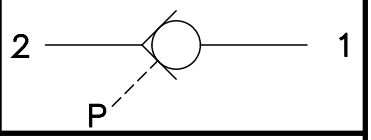

TORQUE:
Steel = 35/40 Ft–Lb. [47/54 Nm]
Aluminum = 25/30 Ft–Lb. [34/41 Nm]

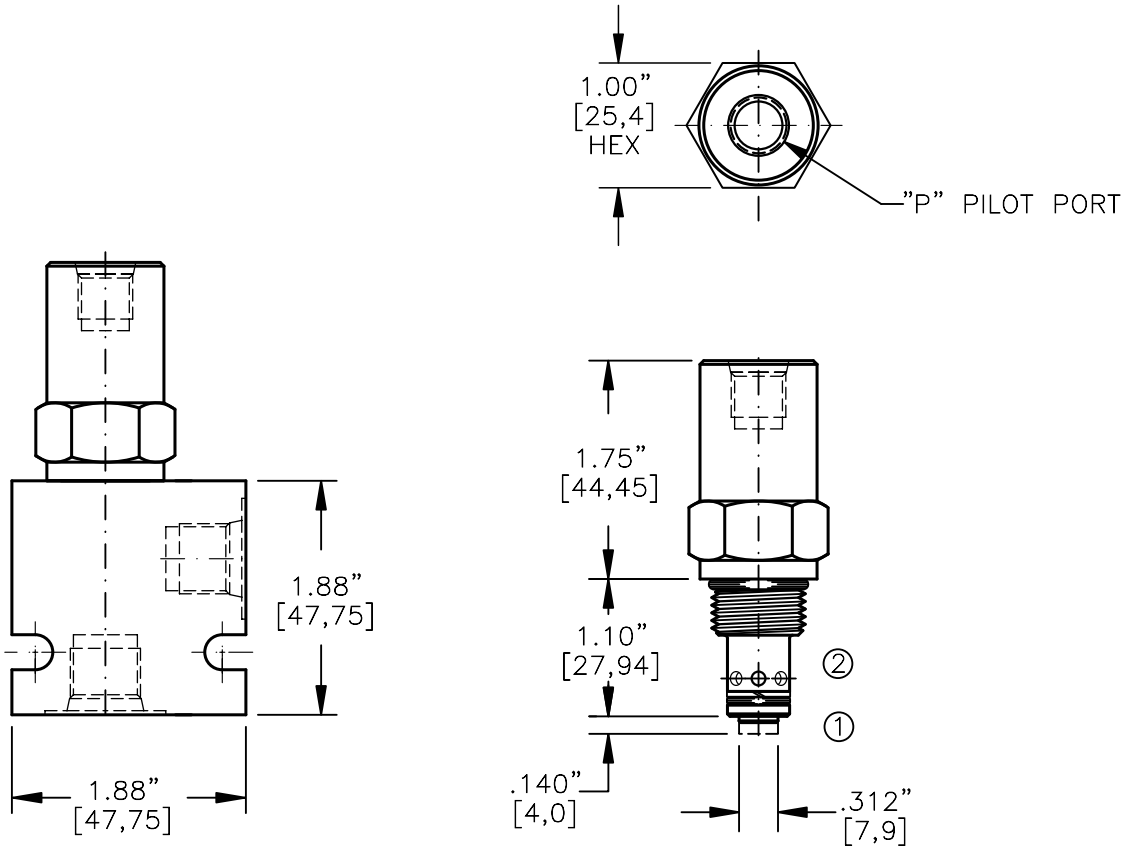

NOTE: CAVITY BOTTOM HOLE MUST ALLOW FOR POPPET EXTENSION (.500 DIA.).
FOR ALUMINUM OR STEEL VALVE HOUSING CONFIGURATIONS SEE PAGE 0–011.1

POCX–08–X–X–4T–XXX

BASIC

SIZE
08 = 3/4"–16 UNF

SEALS
N = BUNA "N"
V = VITON

PORTS
0 = CARTRIDGE ONLY
02BX = G 1/4" BSPP
06TX = SAE – #6
"A" – ALUM. HOUSING
"S" – STEEL HOUSING

"P" PILOT PORT
4T = SAE – #4

CRACK PRESSURE
030 = 30 PSI
060 = 60 PSI
120 = 120 PSI

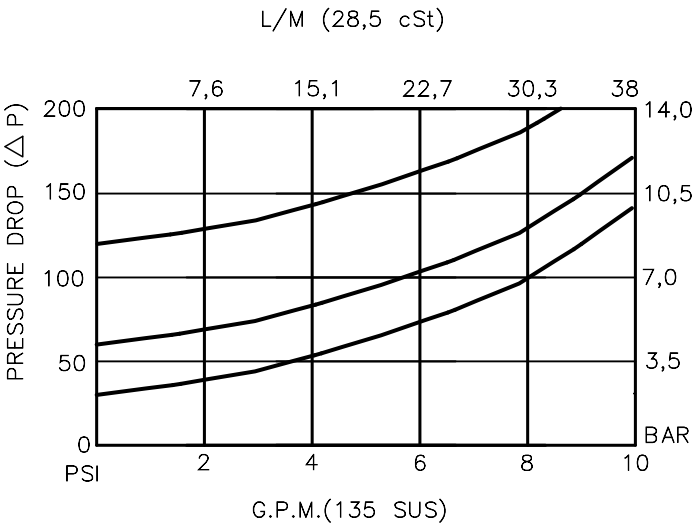

BUCHER hydraulics

PILOT OPERATED CHECK VALVE POPPET TYPE, PILOT TO OPEN, 3 TO 1 PILOT RATIO

DESCRIPTION

This unit is a SCREW IN, cartridge type, guided poppet, hydraulic pilot operated check valve, for use as a blocking or load holding device for high pressure applications.

OPERATIONS

This valve allows free flow from port 2 to port 1 and blocks flow from port 1 to port 2 or holding a load. Flow will be allowed from port 1 to port 2 when pressure is applied to pilot port "P". This pilot operated check valve has a 3 to 1 pilot ratio, meaning that it takes at least one-third of the load pressure held at port 1 that is required at pilot port "P" to open the valve.
We recommend to use an orifice to dampen the pilot signal (X) when used with an on/off (hard shifting) valve.

FEATURES AND BENEFITS

Wide selection of bias springs allows flexibility for back-pressure application.
A low friction seal on pilot piston is standard.
All external carbon steel parts are plated for longer life against the elements.
All cartridge valves are 100% functionally tested.
Industry common cavity.

SPECIFICATIONS

OPERATING PRESSURE: 5,000 PSI [350 Bar]
PROOF PRESSURE: 10,000 PSI [700 Bar]
FLOW: 10.0 GPM [38,0 l/m] nominal. See performance chart.
PILOT RATIO: 3 TO 1
INTERNAL LEAKAGE: 5 drops per minute maximum @ 5,000 PSI [350 Bar]
VALVE HOUSINGS: 2500 PSI [175 Bar] = Aluminum - Anodized.
5000 PSI [350 Bar] = Steel - Unplated.
OPERATING TEMPERATURE: -40° to +250° F. [-40° to +120° C.]
OPERATING MEDIA: All general purpose hydraulic fluids such as MIL-H-5606, SAE-#10, SAE-#20, etc.
INSTALLATION: No restrictions.
SEAL KIT: SKN-0821 Buna "N"
SKV-0821 Viton
WEIGHT: .34 lb [.15 kg] cartridge only.
VALVE CAVITY: #C0820, See Page 0-011.0.

info.el@bucherhydraulics.com www.bucherhydraulics.com/commoncavity

© 2015 by Bucher Hydraulics, Inc., 2545 Northwest Parkway, Elgin, Illinois 60124, USA
All rights reserved.
Data is provided for the purpose of product description only, and must not be construed as warranted characteristics in the legal sense. The information does not relieve users from the duty of conducting their own evaluations and tests. Because the products are subject to continual improvement, we reserve the right to amend the product specifications contained in this catalogue.

POCX-10

BUCHER hydraulics

PILOT OPERATED CHECK VALVE POPPET TYPE, PILOT TO OPEN, 3 TO 1 PILOT RATIO.

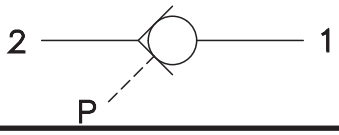

TORQUE:
Steel = 55/60 Ft–Lb. [74/81 Nm]
Aluminum = 35/40 Ft–Lb. [47/54 Nm]

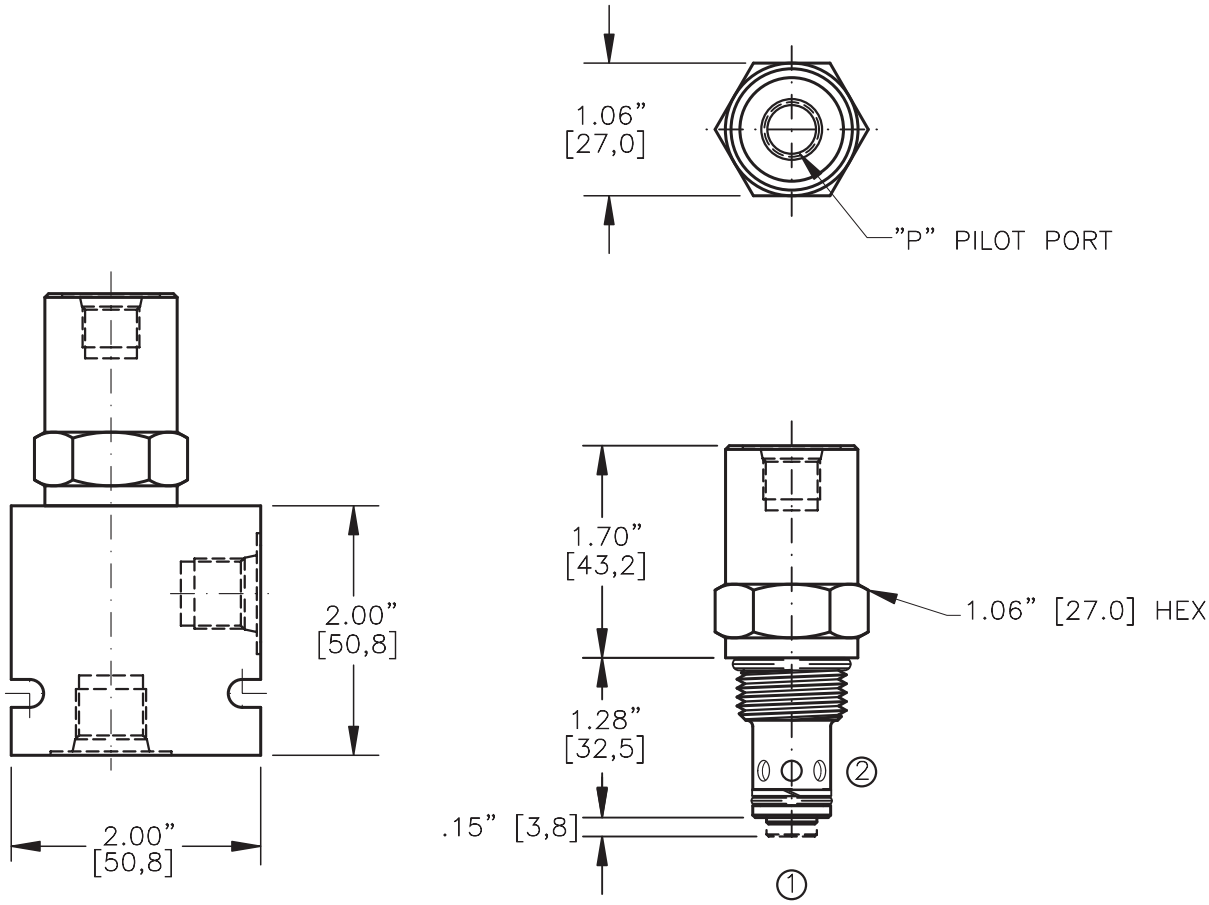

NOTE: CAVITY BOTTOM HOLE MUST ALLOW FOR POPPET EXTENSION (.563 DIA.).
FOR ALUMINUM OR STEEL VALVE HOUSING CONFIGURATIONS SEE PAGE 0–012.1

POCX–10–X–X–XX–XXX

BASIC

SIZE
10 = 7/8"–14 UNF

SEALS
N = BUNA "N"
V = VITON

PORTS
0 = CARTRIDGE ONLY
02BX = G 1/4" BSPP
03BX = G 3/8" BSPP
06TX = SAE – #6
08TX = SAE – #8
"A" – ALUM. HOUSING
"S" – STEEL HOUSING

"P" PILOT PORT
2B = G 1/4" BSPP
4T = SAE – #4

CRACK PRESSURE
030 = 30 PSI
060 = 60 PSI
120 = 120 PSI

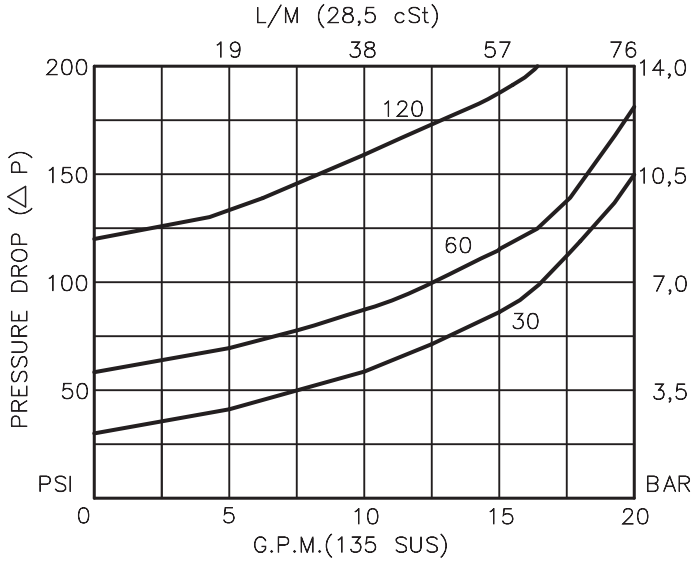

BUCHER hydraulics

PILOT OPERATED CHECK VALVE
POPPET TYPE, PILOT TO OPEN, 3 TO 1 PILOT RATIO.

DESCRIPTION

This unit is a SCREW IN, cartridge type, guided poppet, hydraulic pilot operated check valve, for use as a blocking or load holding device for high pressure applications.

OPERATIONS

This valve allows free flow from port 2 to port 1 and blocks flow from port 1 to port 2 or holding a load. Flow will be allowed from port 1 to port 2 when pressure is applied to pilot port "P". This pilot operated check valve has a 3 to 1 pilot ratio, meaning that it takes at least one-third of the load pressure held at port 1 that is required at pilot port "P" to open the valve.
We recommend to use an orifice to dampen the pilot signal (X) when used with an on/off (hard shifting) valve.

FEATURES AND BENEFITS

Wide selection of bias springs allows flexibility for back-pressure application.
A low friction seal on pilot piston is standard.
All external carbon steel parts are plated for longer life against the elements.
All cartridge valves are 100% functionally tested.
Industry common cavity.

SPECIFICATIONS

OPERATING PRESSURE: 5,000 PSI [350 Bar]
PROOF PRESSURE: 10,000 PSI [700 Bar]
FLOW: 18.0 GPM [70 l/m] nominal. See performance chart.
PILOT RATIO: 3 TO 1
INTERNAL LEAKAGE: 5 drops per minute maximum @ 5,000 PSI [350 Bar]
VALVE HOUSINGS: 2500 PSI [175 Bar] = Aluminum - Anodized.
5000 PSI [350 Bar] = Steel - Unplated.
OPERATING TEMPERATURE: -40° to +250° F. [-40° to +120° C.]
OPERATING MEDIA: All general purpose hydraulic fluids such as MIL-H-5606, SAE-#10, SAE-#20, etc.
INSTALLATION: No restrictions.
SEAL KIT: SKN-1021 Buna "N"
SKV-1021 Viton
WEIGHT: .31 lb [.14 kg] cartridge only.
VALVE CAVITY: #C1020, See Page 0-012.0.

info.el@bucherhydraulics.com www.bucherhydraulics.com/commoncavity

© 2015 by Bucher Hydraulics, Inc., 2545 Northwest Parkway, Elgin, Illinois 60124, USA
All rights reserved.
Data is provided for the purpose of product description only, and must not be construed as warranted characteristics in the legal sense. The information does not relieve users from the duty of conducting their own evaluations and tests. Because the products are subject to continual improvement, we reserve the right to amend the product specifications contained in this catalogue.

POCX-12

BUCHER hydraulics

PILOT OPERATED CHECK VALVE POPPET TYPE, PILOT TO OPEN, 3 TO 1 PILOT RATIO.

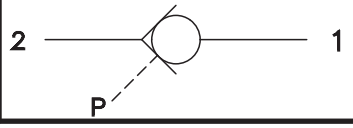

TORQUE:
Steel = 70/75 Ft–Lb. [95/102 Nm]
Aluminum = 55/60 Ft–Lb. [74/81 Nm]

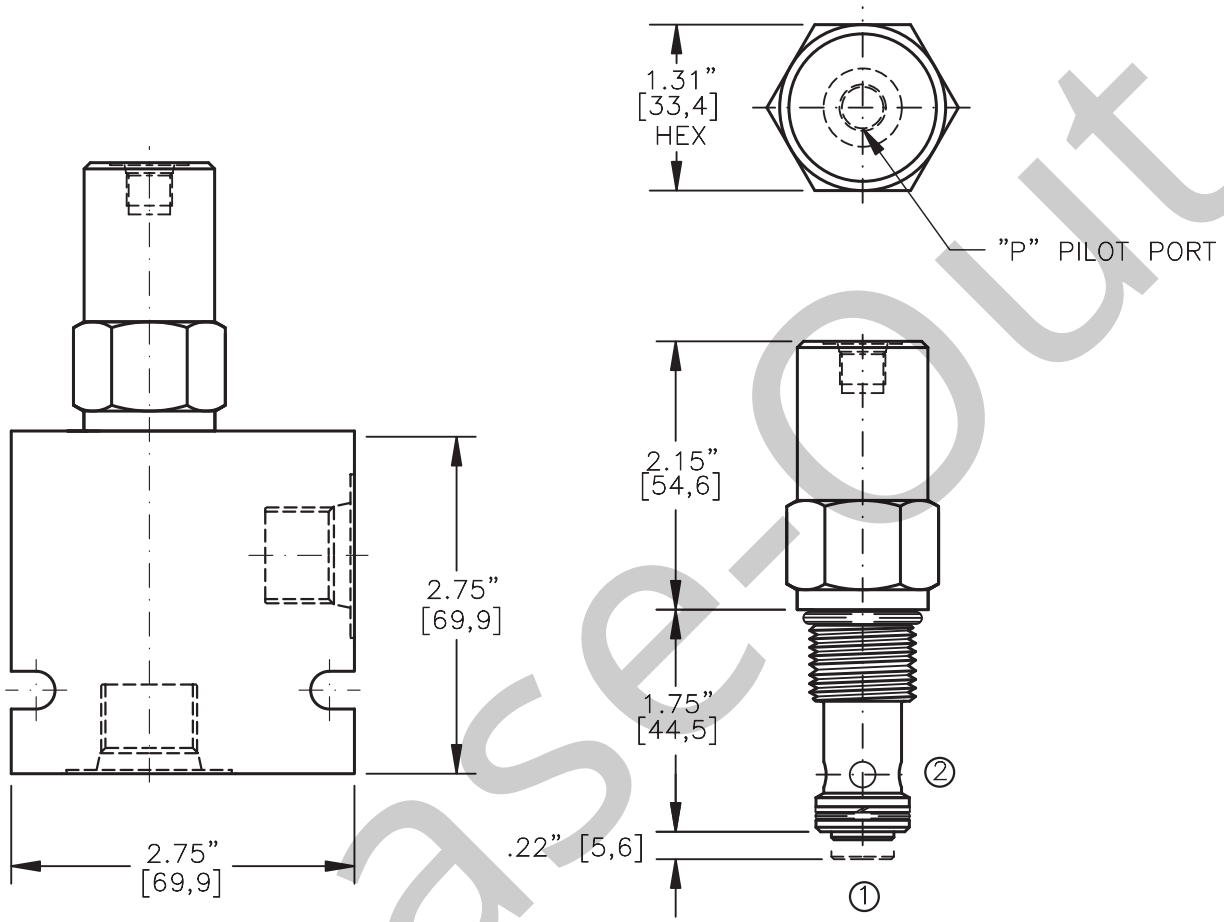

NOTE: CAVITY BOTTOM HOLE MUST ALLOW FOR POPPET EXTENSION(.630 DIA.).
FOR ALUMINUM OR STEEL VALVE HOUSING CONFIGURATIONS SEE PAGE 0–013.1

POCX–12–X–X–XX–XXX

BASIC

SIZE
12 = 1.062"–12 UNF

SEALS
N = BUNA "N"
V = VITON

PORTS
0 = CARTRIDGE ONLY
04BX = G 1/2" BSPP
06BX = G 3/4" BSPP
10TX = SAE – #10
12TX = SAE – #12
"A" – ALUM. HOUSING
"S" – STEEL HOUSING

"P" PILOT PORT
2B = G 1/4" BSPP
4T = SAE – #4

CRACK PRESSURE
030 = 30 PSI
060 = 60 PSI
120 = 120 PSI

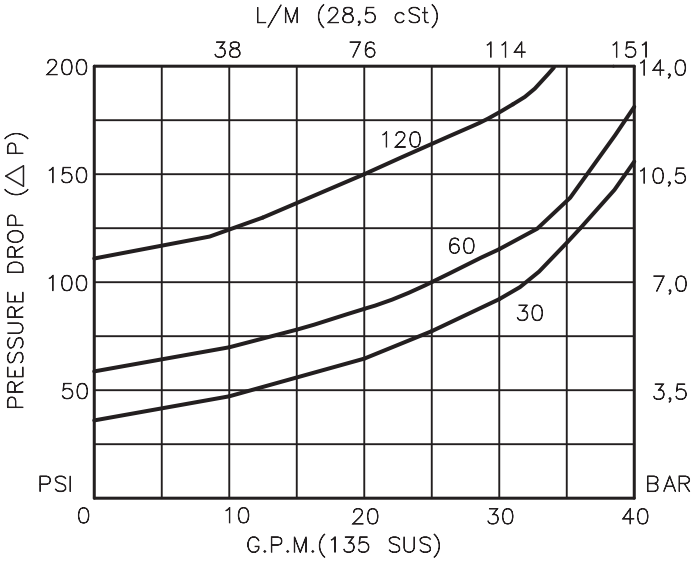

Phase-Out

BUCHER hydraulics

PILOT OPERATED CHECK VALVE
POPPET TYPE, PILOT TO OPEN, 3 TO 1 PILOT RATIO.

DESCRIPTION

This unit is a SCREW IN, cartridge type, guided poppet, hydraulic pilot operated check valve, for use as a blocking or load holding device for high pressure applications.

OPERATIONS

This valve allows free flow from port 2 to port 1 and blocks flow from port 1 to port 2 or holding a load. Flow will be allowed from port 1 to port 2 when sufficient pilot pressure is applied to port "P". This pilot operated check valve has a 3 to 1 pilot ratio, meaning that it takes at least one-third of the load pressure held at port 1 that is required at pilot port "P" to open the valve.
We recommend to use an orifice to dampen the pilot signal (X) when used with an on/off (hard shifting) valve.

FEATURES AND BENEFITS

Wide selection of bias springs allows flexibility for back-pressure application.
A low friction seal on pilot piston is standard.
All external carbon steel parts are plated for longer life against the elements.
All cartridge valves are 100% functionally tested.
Industry common cavity.

SPECIFICATIONS

OPERATING PRESSURE: 5,000 PSI [350 Bar]
PROOF PRESSURE: 10,000 PSI [700 Bar]
FLOW: 35.0 GPM [132,5 l/m] nominal. See performance chart.
PILOT RATIO: 3 TO 1
INTERNAL LEAKAGE: 5 drops per minute maximum @ 5,000 PSI [350 Bar]
VALVE HOUSINGS: 2500 PSI [175 Bar] = Aluminum - Anodized.
5000 PSI [350 Bar] = Steel - Unplated.
OPERATING TEMPERATURE: -40° to +250° F. [-40° to +120° C.]
OPERATING MEDIA: All general purpose hydraulic fluids such as MIL-H-5606, SAE-#10, SAE-#20, etc.
INSTALLATION: No restrictions.
SEAL KIT: SKN-1221 Buna "N"
SKV-1221 Viton
WEIGHT: 0.31 lb [0,14 kg] cartridge only.
VALVE CAVITY: #C1220, See Page 0-013.0.

info.el@bucherhydraulics.com
www.bucherhydraulics.com/commoncavity

© 2015 by Bucher Hydraulics, Inc., 2545 Northwest Parkway, Elgin, Illinois 60124, USA
All rights reserved.
Data is provided for the purpose of product description only, and must not be construed as warranted characteristics in the legal sense. The information does not relieve users from the duty of conducting their own evaluations and tests. Because the products are subject to continual improvement, we reserve the right to amend the product specifications contained in this catalogue.

BUCHER hydraulics
WWW.SUMY.IR

Check valve
Pilot operated check

Q_{max} = 80 l/min, p_{max} = 450 bar
hydraulical operation, pilot operated, poppet type
Type series: ERV 8-C-...

- Screw-in cartridge valve
- All external parts with zinc-nickel coating according to DIN EN ISO 19598
- Two-stage principle (decompression / main opening)
- Load pressure closing cone poppet valve
- Seat tight shut-off
- Compact construction
- Hardened, polished seat section and cone
- With rust water sealing for recessed installation

Description

Series ERV 8-C-... check valves are size 8, pilot-operated, two stage, high performance screw-in valves with an M30x1,5 mounting thread. The valves are designed on the proven poppet/seat principle and are therefore leak-tight in the flow direction B to A. The check function can be overridden by applying a suitable pilot pressure at port X. In the flow direction A to B, flow can pass freely through the screw-in valves (opening pressure = 2.5 bar). All external parts of the screw-in valves are zinc-nickel plated, and are thus suitable for use in the harshest operating environments. These valves are predominantly used in certain mobile and industrial applications to maintain the position of loaded actuators (e.g. outrigger cylinders) after the pump pressure has been disconnected.

Symbol

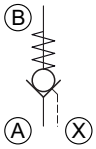

Technical Data

General Characteristics	Description, value, unit
Function group	Check valve
Function	Pilot operated check
Design	Screw-in cartridge valve
Controls	hydraulical operation
Characteristic	pilot operated, poppet type
Construction size	size 8
Thread size	M30×1,5
Mounting attitude	unrestricted
Weight	0.34 kg
Tightening torque steel	100 Nm
Tightening torque tolerance	± 10 %
Minimum ambient temperature	- 25 °C
Maximum ambient temperature	+ 100 °C
Surface protection	All external parts with zinc-nickel coating according to DIN EN ISO 19598
Available seal types	several seal types available, see ordering code
Seal kit order number	NBR: 30003008540 / FKM: 30003038560 / MIL: 30003018810

NOTE!
Supplement to surface corrosion protection:
cartridge housing burnished

Hydraulic Characteristics	Description, value, unit
Maximum operating pressure	450 bar
Maximum flow rate	80 l/min
Flow direction	see symbol
Hydraulic fluid	HL and HLP mineral oil according to DIN 51 524; other fluids on request!
Minimum fluid temperature	- 20 °C
Maximum fluid temperature	+ 80 °C
Viscosity range	2.8 ... 1500 mm^2/s (cSt)
Recommended viscosity range	10 ... 380 mm^2/s (cSt)
Minimum fluid cleanliness (cleanlineless class according to ISO 4406:1999)	class 20/18/15
Geometric Differential Area Ratio	2.1:1
Effective hydraulic pilot ratio (p.o. check valve)	1:2.5
Opening pressure	flow direction A to B: 2.5 bar

NOTE!
In the field "Effective hydraulic pilot ratio (p. o. check valve)" you can find the pre-opening (decompression) ratio. In the field "Geometric opening pressure ratio" you can find the main opening ratio.

NOTE!
E.g. with load pressure of 300 bar the decompression poppet opens when the control pressure X = 300 : 2.5 = 120 bar andthe cylinder retracts “slowly”. (The control pressure theoretically required for main opening = 300 x 2.1 = 630 bar)

Performance graphs

measured with oil viscosity 33.0 mm²/s (cSt)

Δp = f (Q) Pressure drop-flow rate characteristic

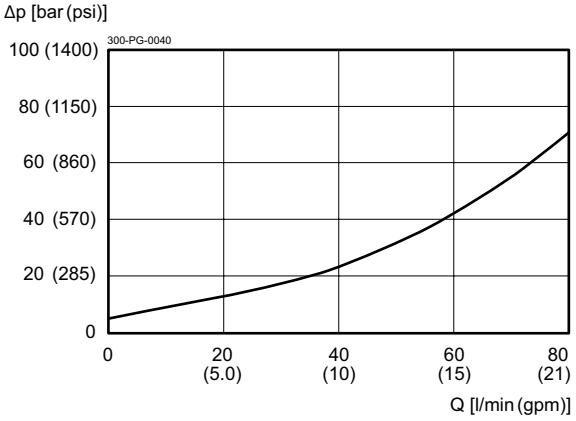

Flow direction A to B

Δp = f (Q) Pressure drop-flow rate characteristic

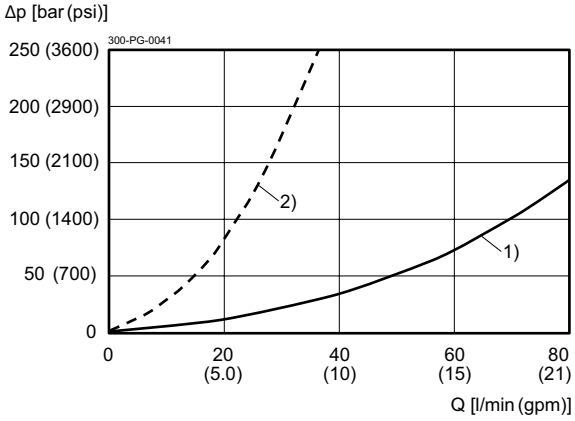

1) Main opening
2) Decompression

Flow direction B to A

Dimensions and sectional view

Beispiel für die Masseinheit:
Example for the dimensional units:

0.79 = 0.79 mm millimeter
(.031) = 0.031" inch

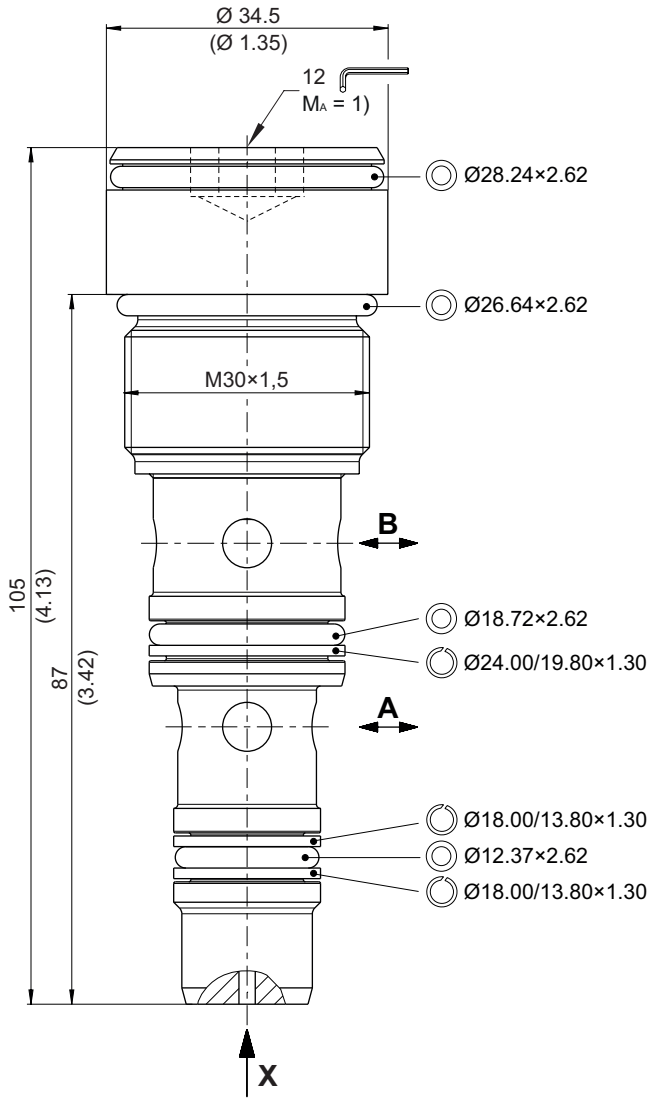

Installation information

NOTE!
1) When fitting the screw-in cartridge valve, use the specified tightening torque. The value can be found in the chapter "Technical data".

NOTE!
The seals are not available individually. The seal kit order number can be found in the chapter "Technical data".

ATTENTION!
Only qualified personnel with mechanical skills may carry out any maintenance work. Generally, the only work that should ever be undertaken is to check, and possibly replace, the seals. When changing seals, oil or grease the new seals thoroughly before fitting them.

Cavity

Beispiel für die Masseinheit:
Example for the dimensional units:
0.79 = 0.79 mm millimeter

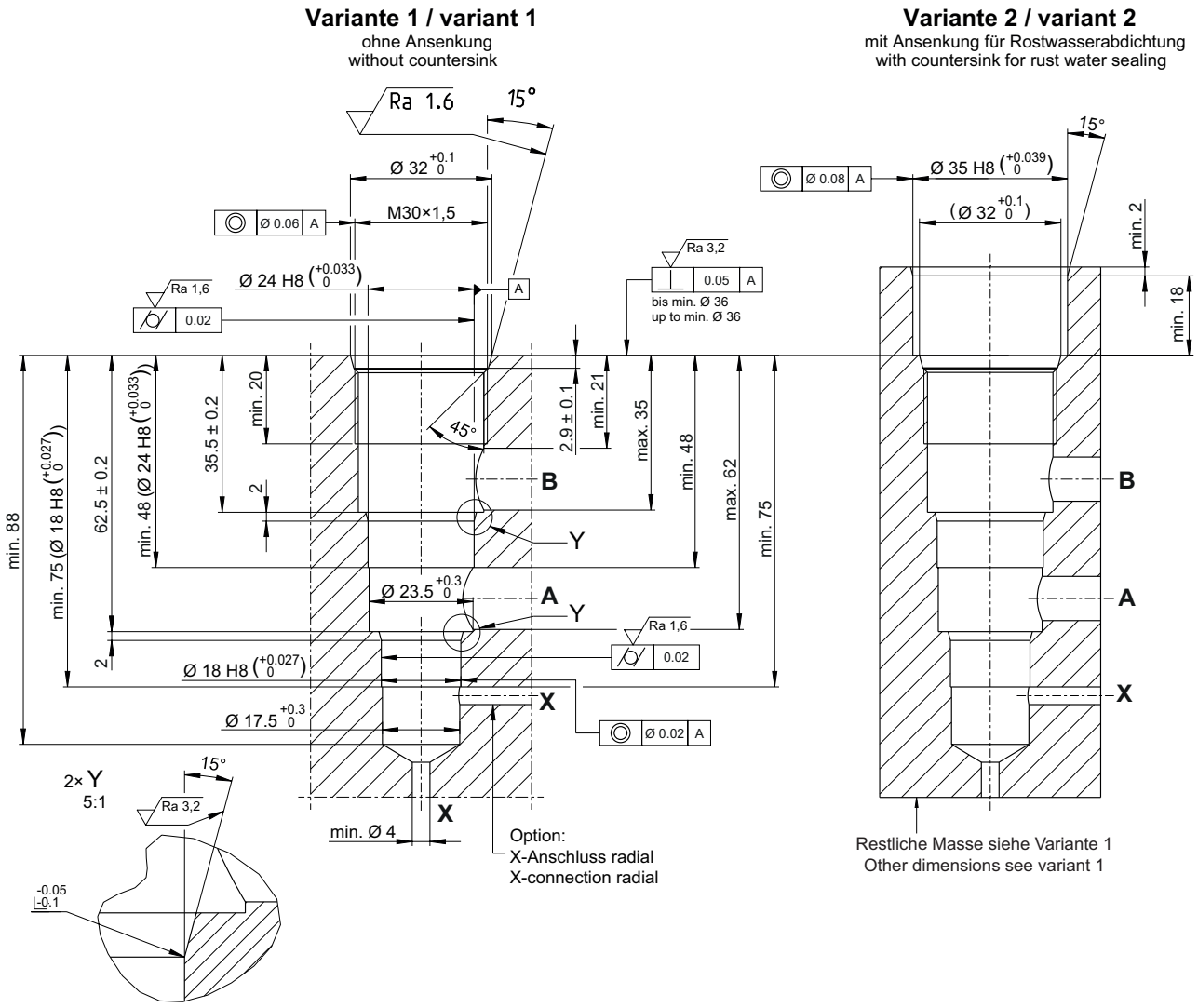

HINWEIS!
NOTE!

Empfohlene Anschlussbohrungen: A, B: Ø 10
Recommended connection bores: X: Ø 4

Toleranzen nach:
Tolerances according to: DIN ISO 2768-mK

Ra 6,3 (√) -0.1 -0.2 +0.2 +0.1

NOTE!
You must maintain the specified positional and diametral tolerances. To ensure trouble-free operation of the screw-in cartridges, we strongly recommend that pilot drilling, boring, reaming and cavity thread-cutting are always performed in one setup.

Ordering code

Ex. ERV 8 - C - N

ERV	=	pilot operated cartridge check valve
8	=	size 8
C	=	version / technical design status
N	=	NBR (nitril-butadien-rubber / BUNA) seals *(standard)*
V	=	FKM (fluorocarbon rubber / VITON) seals
T	=	MIL (low temperature) seals *(special seals - please consult BUCHER)*

info.ch@bucherhydraulics.com **www.bucherhydraulics.com**

© 2021 by Bucher Hydraulics AG, 6345 Neuheim, Switzerland

All rights reserved.
Data is provided for the purpose of product description only, and must not be construed as warranted characteristics in the legal sense. The information does not relieve users from the duty of conducting their own evaluations and tests. Because the products are subject to continual improvement, we reserve the right to amend the product specifications contained in this catalogue.

BUCHER hydraulics
WWW.SUMY.IR

General information
Cavity

Type series: RC

Dimensions and sectional view

Beispiel für die Masseinheit:
Example for the dimensional units:
0.79 = 0.79 mm millimeter

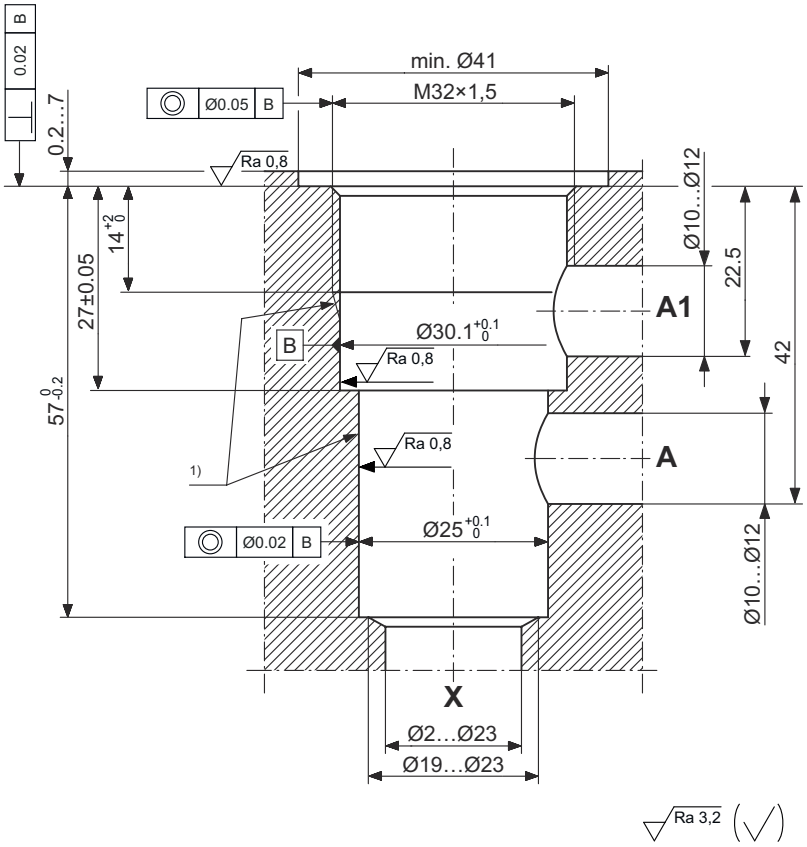

HINWEIS!
NOTE!

[1] Der Gewindeauslauf darf die Ringfläche und Ø25 nicht verletzen.
The thread runout must not damage the ring surface or the Ø25.

Installation information

NOTE!
We offer form tool sets for sale or hire. See data sheet 400-P-040011 for further information.

NOTE!
Cavity type to factory standard.

ATTENTION!
You must maintain the specified positional and diametral tolerances. To ensure trouble-free operation of the screw-in cartridges, we strongly recommend that pilot drilling, boring, reaming and cavity thread-cutting are always performed in one setup.

info.ch@bucherhydraulics.com **www.bucherhydraulics.com**

© 2025 by Bucher Hydraulics AG Frutigen, 3714 Frutigen, Switzerland

All rights reserved.
Data is provided for the purpose of product description only, and must not be construed as warranted characteristics in the legal sense. The information does not relieve users from the duty of conducting their own evaluations and tests. Because the products are subject to continual improvement, we reserve the right to amend the product specifications contained in this catalogue.

BUCHER hydraulics
WWW.SUMY.IR

Check valve
Pilot operated check

Q_{max} = 120 l/min, p_{max} = 350 bar
pilot operated, poppet type, hydraulical operation
Type series: REPB-10...

- Screw-in cartridge valve
- For cavity RC
- All external parts with zinc-nickel coating according to DIN EN ISO 19598
- Installation in threaded port body type RC-12
- High flow rates
- Seated pilot stage
- Seat tight shut-off

Description

The pilot-operated check valves, series REP..., are size 10, two stage, screw-in valves with an M32×1,5 mounting thread. The poppet seat design ensures that the valves are leak-tight from A1 to A. The check function can be overridden by applying a suitable pilot pressure at port X. In the flow direction A to A1, flow can pass freely through the screw-in valve (opening pressure >2 bar). The pressure in port A must not exceed 20 % of the pilot pressure in port X, as the A-line pressure acts on the rear side of the pilot piston. If this condition cannot be met, series REPY... cartridge check valves with external leakage-oil drain must be used. All external parts of the screw-in valve are zinc-nickel plated, and are thus suitable for use in the harshest operating environments. These valves are mainly used in mobile and industrial applications as pilot valves for controlling the travel direction of actuators such as hydraulic motors and cylinders. For self-assembly, please refer to the section related data sheets.

Symbol

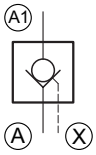

Technical data

General Characteristics	Description, value, unit
Function group	Check valve
Function	Pilot operated check
Design	Screw-in cartridge valve
Controls	hydraulical operation
Characteristic	pilot operated, poppet type
Construction size	nominal size 10
Thread size	M32×1,5
Mounting attitude	unrestricted
Weight	0.35 kg
Cavity acc. factory standard	For cavity RC
Tightening torque steel	200 Nm
Tightening torque aluminium	200 Nm
Tightening torque tolerance	± 10 %
Minimum ambient temperature	- 25 °C
Maximum ambient temperature	+ 80 °C
Surface protection	All external parts with zinc-nickel coating according to DIN EN ISO 19598
Available seal types	several seal types available, see ordering code
Seal kit order number	NBR: DS-302-N / FKM: DS-302-V

Hydraulic Characteristics	Description, value, unit
Maximum operating pressure	350 bar
Maximum flow rate	120 l/min
Flow direction	see symbol
Hydraulic fluid	HL and HLP mineral oil according to DIN 51 524; other fluids on request!
Minimum fluid temperature	- 25 °C
Maximum fluid temperature	+ 80 °C
Viscosity range	10 ... 650 mm^2/s (cSt)
Recommended viscosity range	15 ... 250 mm^2/s (cSt)
Minimum fluid cleanliness (cleanlineless class according to ISO 4406:1999)	class 20/18/15
Geometric Differential Area Ratio	1:6.5
Opening pressure	A to A1: > 2 bar
Pilot pressure	see table at chapter "dimensions and sectional view"

Performance graphs

measured with oil viscosity 33.0 mm²/s (cSt)

Δp = f (Q) Pressure drop-flow rate characteristic

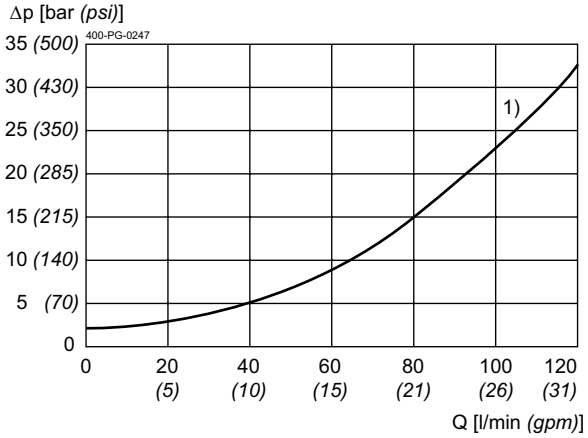

1) = A → A1

Δp = f (Q) Pressure drop-flow rate characteristic

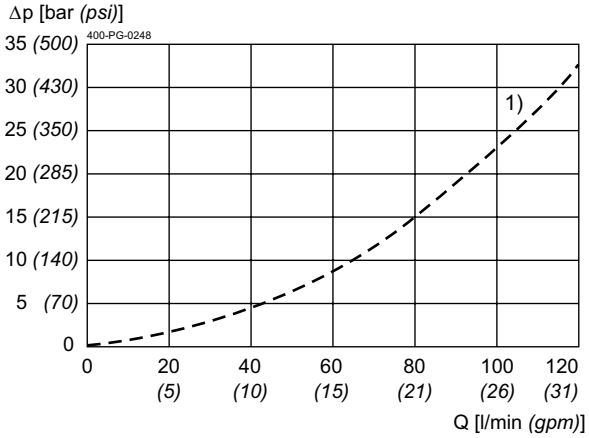

1) = A1 → A

Dimensions and sectional view

Beispiel für die Masseinheit:
Example for the dimensional units:

0.79 = 0.79 mm millimeter
(.031) = 0.031" inch

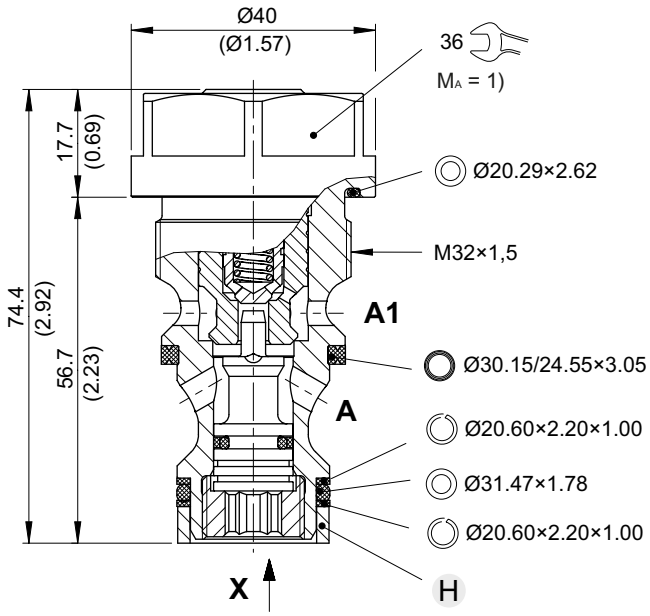

Pilot pressure at X port 1) [reference values]

p A1 [bar (psi)]	pX [bar (psi)] @ Q = 40 l/min (10 gpm)	pX [bar (psi)] @ Q = 80 l/min (21 gpm)	pX [bar (psi)] @ Q = 120 l/min (31 gmp)
300 (4300)	57 (815)	61 (870)	67 (955)
200 (2900)	28 (400)	32 (455)	38 (540)
100 (1400)	13 (180)	17 (240)	27 (385)
50 (700)	9 (130)	13 (180)	23 (330)

1) The pilot pressure needed at the X port depends on the flow and pressure from A1 → A

Installation information

NOTE!
To install the product, first insert the sealing components pos. H (sealing sleeve), 4 (backup ring), 3 (O-ring) und 4 (backup ring) in that order into the cavity, then screw the screw-in valve - complete with sealing components pos. 1 and 2 - into the cavity.

NOTE!
1) When fitting the screw-in cartridge valve, use the specified tightening torque. The value can be found in the chapter "Technical data".

NOTE!
The seals are not available individually. The seal kit order number can be found in the chapter "Technical data".

ATTENTION!
Only qualified personnel with mechanical skills may carry out any maintenance work. Generally, the only work that should ever be undertaken is to check, and possibly replace, the seals. When changing seals, oil or grease the new seals thoroughly before fitting them.

Ordering code

Ex. R E P B - 10 _ - 1

R	=	check valve
E	=	pilot operated
P	=	cartridge design
A ... Q	=	standard model according to valid data sheet *(standard)*
Z ... R	=	special model after consultation
10	=	nominal size 10
(blank)	=	NBR (nitril-butadien-rubber / BUNA) seals *(standard)*
V	=	FKM (fluorocarbon rubber / VITON) seals *(special seals - please consult BUCHER)*
1 ... 9	=	technical design no. (omit when ordering)

Related data sheets

Reference	Description
400-P-040011	Form tools
400-P-060151	Cavity RC
400-P-740201	Threaded port body RC-12

info.ch@bucherhydraulics.com **www.bucherhydraulics.com**

© 2021 by Bucher Hydraulics AG Frutigen, 3714 Frutigen, Switzerland

All rights reserved.
Data is provided for the purpose of product description only, and must not be construed as warranted characteristics in the legal sense. The information does not relieve users from the duty of conducting their own evaluations and tests. Because the products are subject to continual improvement, we reserve the right to amend the product specifications contained in this catalogue.

BUCHER hydraulics
WWW.SUMY.IR

General information
Cavity

Type series: EC

Dimensions and sectional view

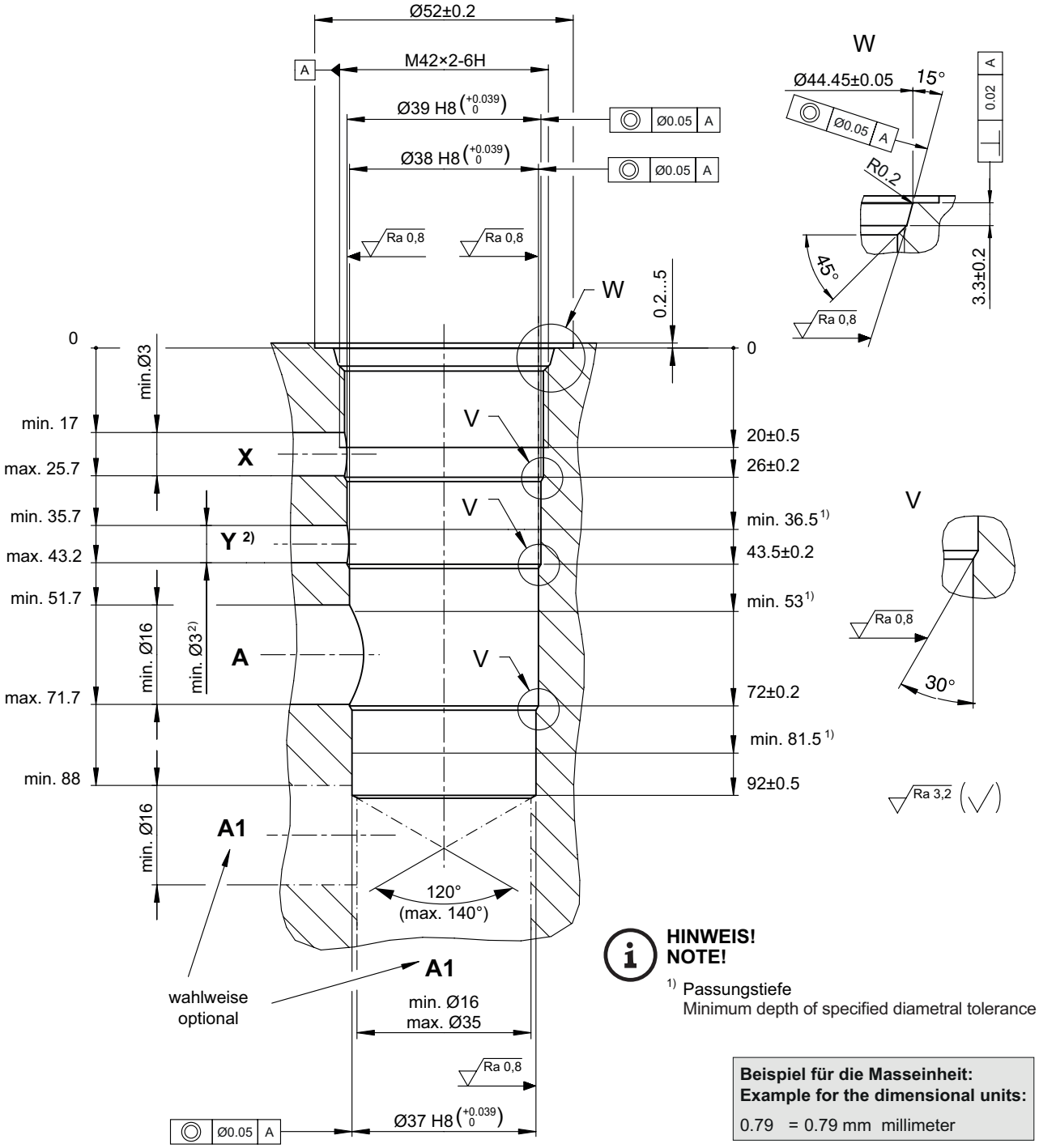

HINWEIS!
NOTE!

1) Passungstiefe
Minimum depth of specified diametral tolerance

Beispiel für die Masseinheit:
Example for the dimensional units:

0.79 = 0.79 mm millimeter

Installation information

ATTENTION!
You must maintain the specified positional and diametral tolerances. To ensure trouble-free operation of the screw-in cartridges, we strongly recommend that pilot drilling, boring, reaming and cavity thread-cutting are always performed in one setup.

NOTE!
We offer form tool sets for sale or hire. For further information, see data sheet 400-P-040011.

NOTE!
Cavity type to factory standard.

info.ch@bucherhydraulics.com **www.bucherhydraulics.com**

© 2023 by Bucher Hydraulics AG Frutigen, 3714 Frutigen, Switzerland

All rights reserved.
Data is provided for the purpose of product description only, and must not be construed as warranted characteristics in the legal sense. The information does not relieve users from the duty of conducting their own evaluations and tests. Because the products are subject to continual improvement, we reserve the right to amend the product specifications contained in this catalogue.

BUCHER hydraulics
WWW.SUMY.IR

Lock valve
Pilot operated check valve

Q_{max} = 300 l/min, p_{max} = 350 bar
pilot operated, poppet type, hydraulical operation
Type series: REPNB-16-...

- Screw-in cartridge valve
- For cavity EC
- All external parts with zinc-nickel plating according to DIN EN ISO 19598
- Installation in threaded port body type GEAA
- High flow rates
- Seated pilot stage
- Seat tight shut-off

Description

The pilot-operated check valves, series REPN..., are size 16, two stage, screw-in valves with an M42×2 mounting thread. The poppet seat design ensures that the valves are leak-tight from A1 to A. The check function can be overridden by applying a suitable pilot pressure at port X. In the flow direction A to A1, flow can pass freely through the screw-in valve (opening pressure > 2 bar). The pressure in port A must not exceed 20 % of the pilot pressure in port X, as the A-line pressure acts on the rear side of the pilot piston. If this condition cannot be met, series REPY... cartridge check valves with external leakage-oil drain must be used. All external parts of the screw-in valves are zinc-nickel plated and are thus suitable for use in the harshest operating environments. These valves are mainly used in mobile and industrial applications as pilot valves for controlling the travel direction of actuators such as hydraulic motors and cylinders. For self-assembly, please refer to the section related data sheets.

Symbol

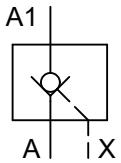

Technical data

General characteristics	Description, value, unit
Function group	Lock valve
Function	Pilot operated check valve
Design	Screw-in cartridge valve
Controls	hydraulical operation
Characteristic	pilot operated, poppet type
Construction size	NG 16
Thread size	M42×2
Mounting attitude	unrestricted
Weight	0.77 kg
Cavity acc. factory standard	For cavity EC
Tightening torque steel	400 Nm
Tightening torque aluminium	400 Nm
Tightening torque tolerance	± 10 %
Minimum ambient temperature	- 25 °C
Maximum ambient temperature	+ 80 °C
Surface protection	All external parts with zinc-nickel plating according to DIN EN ISO 19598
Sealing material	see ordering code
Seal kit order number	NBR: DS-361-N / FKM: DS-361-V

Hydraulic characteristics	Description, value, unit
Maximum operating pressure	350 bar
Maximum flow rate	300 l/min
Flow direction	see symbol
Hydraulic fluid	HL and HLP mineral oil according to DIN 51 524; other fluids on request!
Minimum fluid temperature	- 25 °C
Maximum fluid temperature	+ 80 °C
Viscosity range	10 ... 650 mm^2/s (cSt)
Recommended viscosity range	15 ... 250 mm^2/s (cSt)
Minimum fluid cleanliness (cleanlineless class according to ISO 4406:1999)	class 20/18/15
Geometric Differential Area Ratio	1:16
Opening pressure	A to A1: > 2 bar
Pilot pressure	see table at chapter "dimensions and sectional view" bar

WWW.SUMY.IR

Performance graphs

measured with oil viscosity 33.0 mm²/s (cSt)

Δp = f (Q) Pressure drop-flow rate characteristic

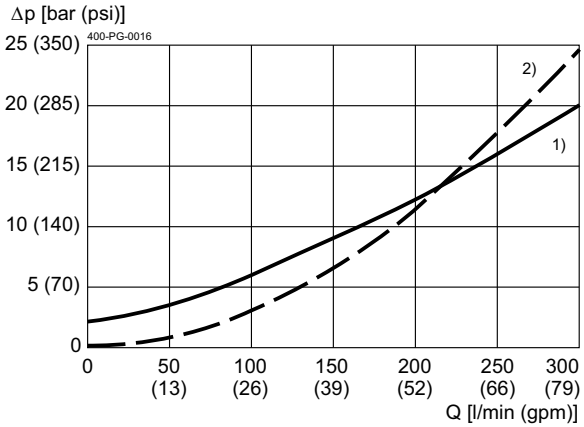

1) = A → A1
2) = A1 → A

Dimensions and sectional view

Beispiel für die Masseinheit:
Example for the dimensional units:

0.79 = 0.79 mm millimeter
(.031) = 0.031" inch

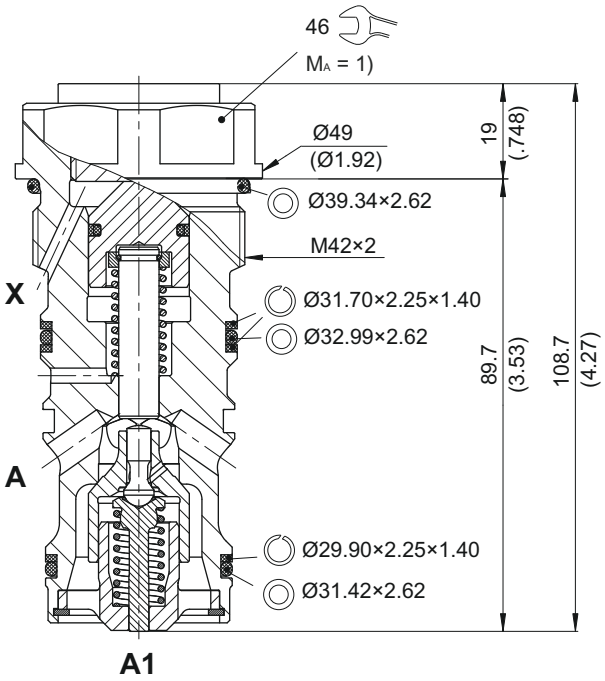

Pilot pressure at X port 1) [reference values]

p A1 [bar (psi)]	Q [l/min (gpm)]	p X [bar (psi)]
300 (4300)	100 / 150 / 200 (26 / 39 / 52)	50 / 60 / 72 (700 / 860 / 1030)
200 (2900)	100 / 150 / 200 (26 / 39 / 52)	35 / 45 / 52 (500 / 640 / 740)
100 (1400)	100 / 150 / 200 (26 / 39 / 52)	18 / 24 / 36 (260 / 340 / 515)
50 (700)	100 / 150 / 200 (26 / 39 / 52)	14 / 22 / 28 (200 / 315 / 400)

1) The pilot pressure needed at the X port depends on the flow and pressure from A1 → A

Installation information

NOTE!
1) When fitting the screw-in cartridge valve, use the specified tightening torque. The value can be found in the chapter "Technical data".

NOTE!
The seals are not available individually. The seal kit order number can be found in the chapter "Technical data".

ATTENTION!
Only qualified personnel with mechanical skills may carry out any maintenance work. Generally, the only work that should ever be undertaken is to check, and possibly replace, the seals. When changing seals, oil or grease the new seals thoroughly before fitting them.

BUCHER hydraulics
WWW.SUMY.IR

Ordering code

Ex. R E P N B - 16 - _ - 1

R	=	check valve
E	=	pilot operated
P	=	cartridge design
N	=	without external drain
A ... Q	=	standard model according to valid data sheet *(standard)*
Z ... R	=	special model after consultation
16	=	nominal size 16
(blank)	=	NBR (nitril-butadien-rubber / BUNA) seals *(standard)*
V	=	FKM (fluorocarbon rubber / VITON) seals *(special seals - please consult BUCHER)*
1 ... 9	=	technical design no. (omit when ordering)

Related data sheets

Reference	Description
400-P-040011	Form tools
400-P-080121	Cavity EC
400-P-750201	Threaded port body GEAA

info.ch@bucherhydraulics.com **www.bucherhydraulics.com**

© 2026 by Bucher Hydraulics AG Frutigen, 3714 Frutigen, Switzerland

All rights reserved.
Data is provided for the purpose of product description only, and must not be construed as warranted characteristics in the legal sense. The information does not relieve users from the duty of conducting their own evaluations and tests. Because the products are subject to continual improvement, we reserve the right to amend the product specifications contained in this catalogue.

BUCHER hydraulics
WWW.SUMY.IR

General information
Cavity

Type series: RCY

Dimensions and sectional view

Beispiel für die Masseinheit:
Example for the dimensional units:
0.79 = 0.79 mm millimeter

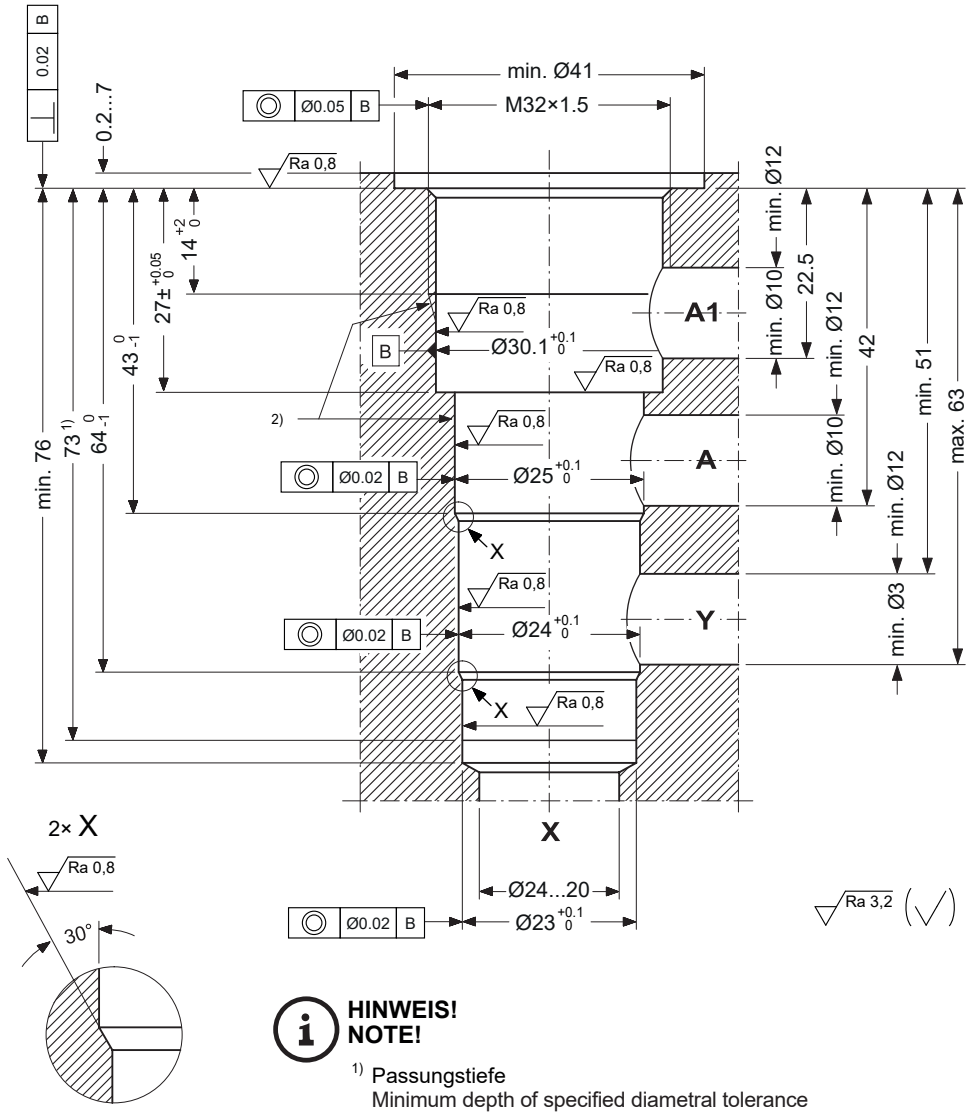

HINWEIS!
NOTE!

1) Passungstiefe
Minimum depth of specified diametral tolerance

2) Der Gewindeauslauf darf die Ringfläche und Ø25 nicht verletzen.
The thread runout must not damage the ring surface or the Ø25.

Installation information

NOTE!
We offer form tool sets for sale or hire. See data sheet 400-P-040011 for further information.

NOTE!
Cavity type to factory standard.

ATTENTION!
You must maintain the specified positional and diametral tolerances. To ensure trouble-free operation of the screw-in cartridges, we strongly recommend that pilot drilling, boring, reaming and cavity thread-cutting are always performed in one setup.

info.ch@bucherhydraulics.com **www.bucherhydraulics.com**

© 2025 by Bucher Hydraulics AG Frutigen, 3714 Frutigen, Switzerland

All rights reserved.
Data is provided for the purpose of product description only, and must not be construed as warranted characteristics in the legal sense. The information does not relieve users from the duty of conducting their own evaluations and tests. Because the products are subject to continual improvement, we reserve the right to amend the product specifications contained in this catalogue.

BUCHER hydraulics

WWW.SUMY.IR

Check valve
Pilot operated check

Q_{max} = 120 l/min, p_{max} = 350 bar
pilot operated, poppet type, hydraulical operation
Type series: REPYB-10-...

- Screw-in cartridge valve
- For cavity RCY
- All external parts with zinc-nickel coating according to DIN EN ISO 19598
- Installation in threaded port body type GCRA
- High flow rates
- Seated pilot stage
- Seat tight shut-off
- With external pilot-drain port

Description

The pilot-operated check valves, series REPY..., are size 10, two stage, screw-in valves with an M32×1,5 mounting thread. The poppet seat design ensures that the valves are leak-tight from A1 to A. The check function can be overridden by applying a suitable pilot pressure at port X. In the flow direction A to A1, flow can pass freely through the screw-in valve (opening pressure >2 bar). The leakage-oil from the pilot piston is drained via port Y. This type series is used where the pressure in the A line can be more than 20 % of the pressure in X while the valve is piloted open (oil flow A1 to A). If this situation will not arise, series REP... cartridge check valves with internal leakage-oil drain can be used. All external parts of the screw-in valve are zinc-nickel plated, and are thus suitable for use in the harshest operating environments. These valves are mainly used in mobile and industrial applications as pilot valves for controlling the travel direction of actuators such as hydraulic motors and cylinders. For self-assembly, please refer to the section related data sheets.

Symbol

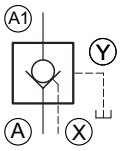

Technical data

General Characteristics	Description, value, unit
Function group	Check valve
Function	Pilot operated check
Design	Screw-in cartridge valve
Controls	hydraulical operation
Characteristic	pilot operated, poppet type
Construction size	nominal size 10
Thread size	M32×1,5
Mounting attitude	unrestricted
Weight	0.40 kg
Cavity acc. factory standard	For cavity RCY
Tightening torque steel	200 Nm
Tightening torque aluminium	200 Nm
Tightening torque tolerance	± 10 %
Minimum ambient temperature	- 25 °C
Maximum ambient temperature	+ 80 °C
Surface protection	All external parts with zinc-nickel coating according to DIN EN ISO 19598
Available seal types	several seal types available, see ordering code
Seal kit order number	NBR: DS-301-N / FKM: DS-301-V

Hydraulic Characteristics	Description, value, unit
Maximum operating pressure	350 bar
Maximum flow rate	120 l/min
Flow direction	see symbol
Hydraulic fluid	HL and HLP mineral oil according to DIN 51 524; other fluids on request!
Minimum fluid temperature	- 25 °C
Maximum fluid temperature	+ 80 °C
Viscosity range	10 ... 650 mm^2/s (cSt)
Recommended viscosity range	15 ... 250 mm^2/s (cSt)
Minimum fluid cleanliness (cleanlineless class according to ISO 4406:1999)	class 20/18/15
Geometric Differential Area Ratio	1:8.8
Opening pressure	A to A1: > 2 bar
Pilot pressure	see table at chapter "dimensions and sectional view"

Performance graphs

measured with oil viscosity 33.0 mm²/s (cSt)

Δp = f (Q) Pressure drop-flow rate characteristic

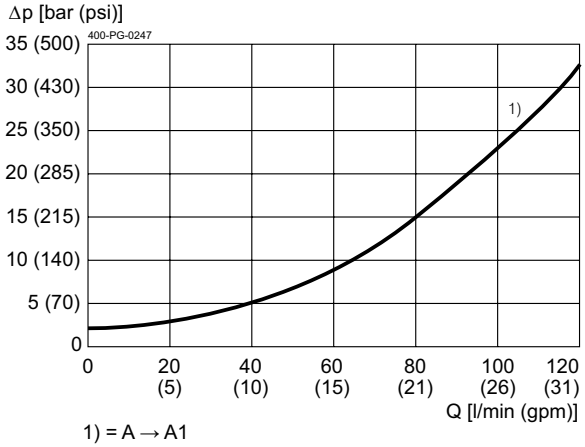

1) = A → A1

Δp = f (Q) Pressure drop-flow rate characteristic

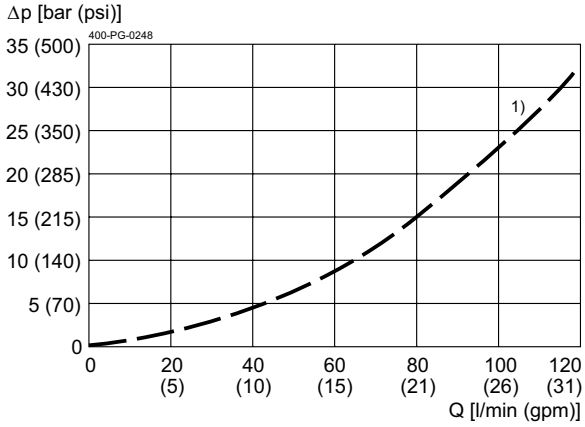

1) = A1 → A

Dimensions and sectional view

Beispiel für die Masseinheit:
Example for the dimensional units:

0.79 = 0.79 mm millimeter
(.031) = 0.031" inch

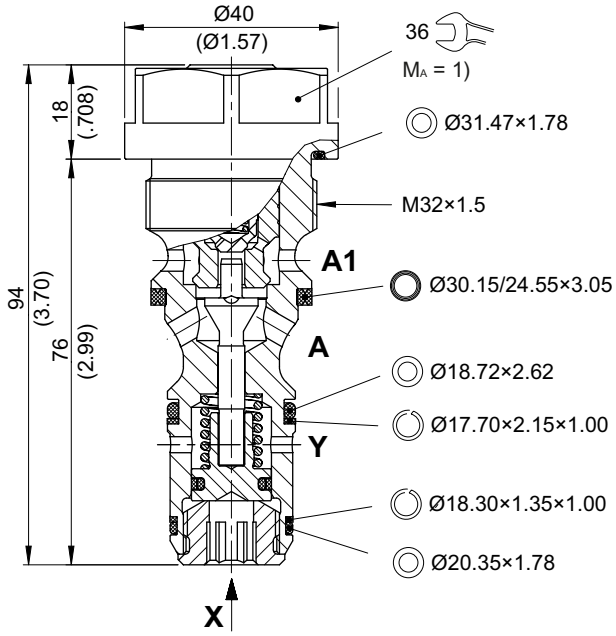

Pilot pressure at X port 1) [*reference values*]

p A1 [bar (psi)]	pX [bar (psi)] @ Q = 40 l/min (10 gpm)	pX [bar (psi)] @ Q = 80 l/min (21 gpm)	pX [bar (psi)] @ Q = 120 l/min (31 gpm)
300 (4300)	26 (370)	26 (370)	26 (370)
200 (2900)	20 (285)	20 (285)	20 (285)
100 (1400)	14 (200)	14 (200)	14 (200)
50 (700)	11 (160)	11 (160)	11 (160)

1) The pilot pressure needed at the X port depends on the flow and pressure from A1→ A

Installation information

NOTE!
1) When fitting the screw-in cartridge valve, use the specified tightening torque. The value can be found in the chapter "Technical data".

ATTENTION!
Only qualified personnel with mechanical skills may carry out any maintenance work. Generally, the only work that should ever be undertaken is to check, and possibly replace, the seals. When changing seals, oil or grease the new seals thoroughly before fitting them.

NOTE!
The seals are not available individually. The seal kit order number can be found in the chapter "Technical data".

Ordering code

Ex. R E P Y B - 10 - _ - 1

R	=	check valve
E	=	pilot operated
P	=	cartridge design
Y	=	with external drain port
A ... Q	=	standard model according to valid data sheet *(standard)*
Z ... R	=	special model after consultation
10	=	nominal size 10
(blank)	=	NBR (nitril-butadien-rubber / BUNA) seals *(standard)*
V	=	FKM (fluorocarbon rubber / VITON) seals *(special seals - please consult BUCHER)*
1 ... 9	=	technical design no. (omit when ordering)

Related data sheets

Reference	Description
400-P-040011	Form tools
400-P-060161	Cavity RCY
400-P-740211	Threaded port body GCRA

info.ch@bucherhydraulics.com **www.bucherhydraulics.com**

© 2021 by Bucher Hydraulics AG Frutigen, 3714 Frutigen, Switzerland

All rights reserved.
Data is provided for the purpose of product description only, and must not be construed as warranted characteristics in the legal sense. The information does not relieve users from the duty of conducting their own evaluations and tests. Because the products are subject to continual improvement, we reserve the right to amend the product specifications contained in this catalogue.

PTCC-10

BUCHER hydraulics

PILOT OPERATED CHECK VALVE POPPET TYPE, PILOT TO CLOSE, PILOT RATIO.

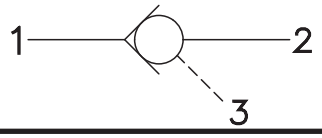

TORQUE:
Steel = 55/60 Ft–Lb. [74/81 Nm]
Aluminum = 35/40 Ft–Lb. [47/54 Nm]

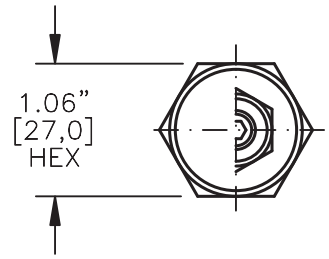

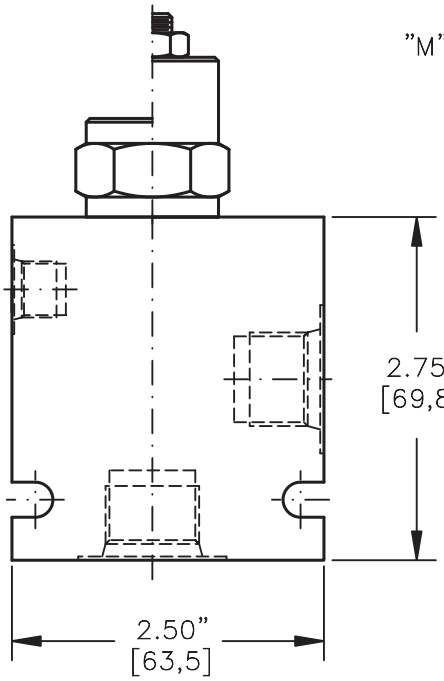

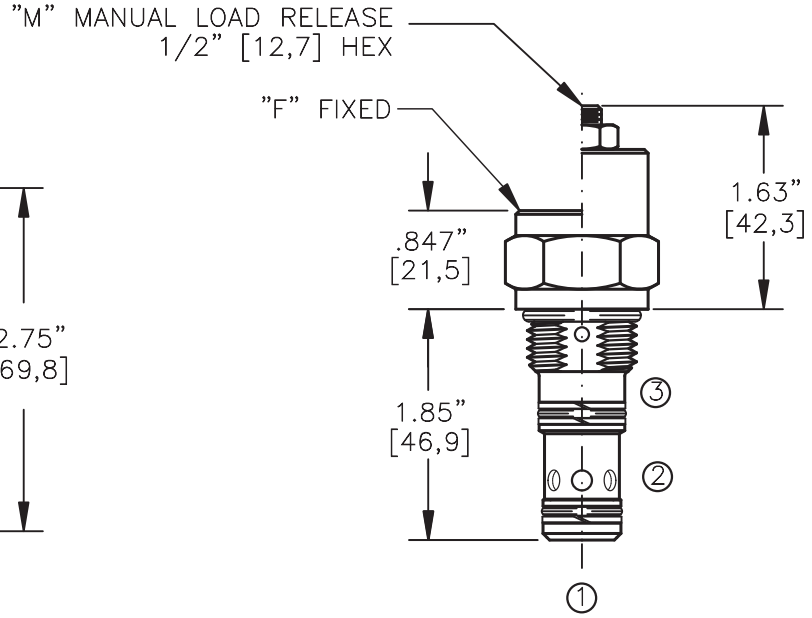

NOTE: FOR ALUMINUM OR STEEL VALVE HOUSING CONFIGURATIONS SEE PAGE 0–022.1.

PTCC–10–X–X–X–X

BASIC

SIZE
10 = 7/8"–14 UNF

SEALS
N = BUNA "N"
V = VITON

ADJUSTMENT
F = FIXED
M = MANUAL RELEASE

PORTS
0 = CARTRIDGE ONLY
06TX = SAE – #6
08TX = SAE – #8
02BX = 1/4" BSPP
03BX = 3/8" BSPP
"A" – ALUM. HOUSING
"S" – STEEL HOUSING

PILOT RATIO
2 = 2 TO 1
3 = 3 TO 1

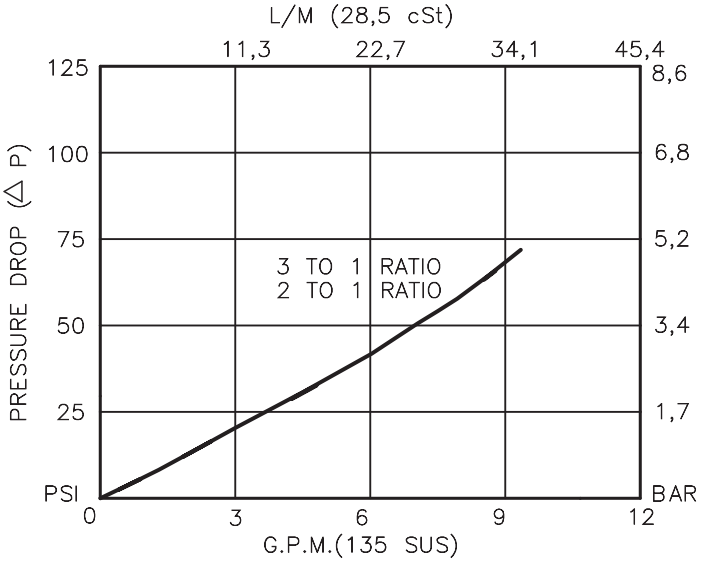

BUCHER hydraulics

PILOT OPERATED CHECK VALVE

POPPET TYPE, PILOT TO CLOSE, PILOT RATIO.

DESCRIPTION

This unit is a SCREW-IN cartridge type, guided poppet, hydraulic pilot operated check valve, for use as a blocking or load holding device for high pressure applications.

OPERATIONS

This valve allows free flow from port 1 to port 2 and blocks flow from port 2 to port 1 for holding a load. Flow will not be allowed from port 2 to port 1 when pressure is applied to port 3. This pilot operated check valve has a 3 to 1 or 2 to 1 pilot ratio, meaning that port 3 requires at least one-third or half of the load pressure held at port 2 to close the valve.

FEATURES AND BENEFITS

A low friction seal on pilot piston is standard.
A separate heavy spring assures fast return of the pilot piston for a very quick, reliable and positve valve re-open.
Optional screw type manual load release is available.
All external carbon steel parts are plated for longer life against the elements.
All cartridge valves are 100% functionally tested.
Industry common cavity.

SPECIFICATIONS

OPERATING PRESSURE: 5,000 PSI [350 Bar]
PROOF PRESSURE: 10,000 PSI [700 Bar]
FLOW: 10.0 GPM [38 l/m] nominal. See performance chart.
PILOT RATIO: 3 TO 1 OR 2 TO 1
INTERNAL LEAKAGE: 5 drops per minute maximum @ 5,000 PSI [350 Bar]
VALVE HOUSINGS: 2500 PSI [175 Bar] = Aluminum - Anodized.
5000 PSI [350 Bar] = Steel - Unplated.
OPERATING TEMPERATURE: -40° to +250° F. [-40° to +120° C.]
OPERATING MEDIA: All general purpose hydraulic fluids such as MIL-H-5606, SAE-#10, SAE-#20, etc.
INSTALLATION: No restrictions.
SEAL KIT: SKN-1028 Buna "N"
SKV-1028 Viton
WEIGHT: .32 lb [.15 kg] cartridge only.
VALVE CAVITY: #C1025, See Page 0-022.0.

info.el@bucherhydraulics.com www.bucherhydraulics.com/commoncavity

© 2015 by Bucher Hydraulics, Inc., 2545 Northwest Parkway, Elgin, Illinois 60124, USA
All rights reserved.
Data is provided for the purpose of product description only, and must not be construed as warranted characteristics in the legal sense. The information does not relieve users from the duty of conducting their own evaluations and tests. Because the products are subject to continual improvement, we reserve the right to amend the product specifications contained in this catalogue.

BUCHER hydraulics
WWW.SUMY.IR

General information
Cavity

Type series: C0840

Dimensions and sectional view

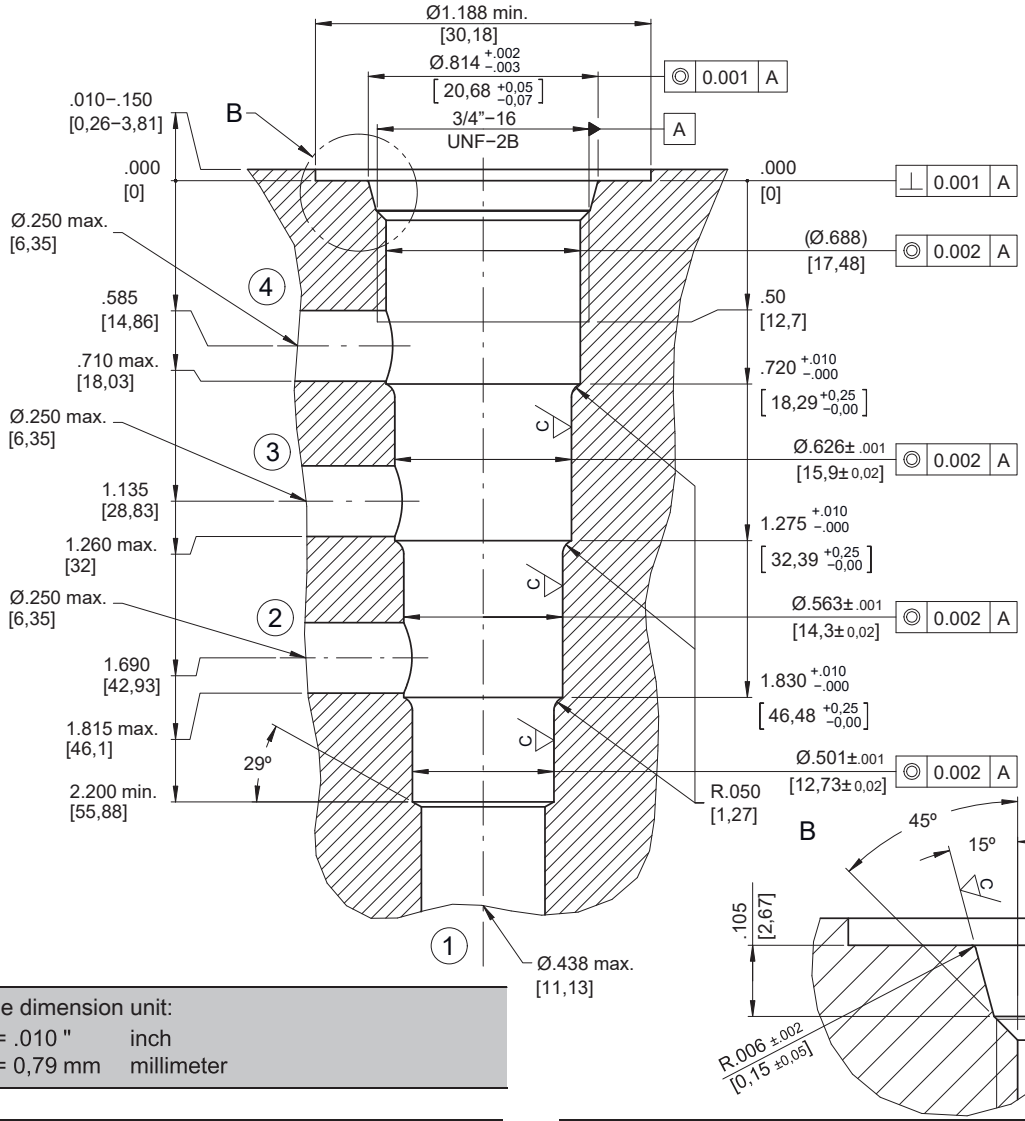

Example dimension unit:		
.010	= .010 "	inch
[0,79]	= 0,79 mm	millimeter

Dimension Tolerances	
Unless otherwise specified	
0.000	± .005″
0.00	± .010″
Angles	± 1/2°

Surface roughness		
Ra	C	D
	45 µin	125 µin
	(1.15 µm)	(3.2 µm)
	D Unless otherwise specified	

Installation information

ATTENTION!
You must maintain the specified positional and diametral tolerances. To ensure trouble-free operation of the screw-in cartridges, we strongly recommend that pilot drilling, boring, reaming and cavity thread-cutting are always performed in one setup.

NOTE!
Cavity type to factory standard.

NOTE!
We offer form tool sets for sale or hire. See data sheet 520-P-000050 for further information.

info.us@bucherhydraulics.com **www.bucherhydraulics.com**

© 2025 by Bucher Hydraulics Inc., Elgin, IL 60124, USA

All rights reserved.
Data is provided for the purpose of product description only, and must not be construed as warranted characteristics in the legal sense. The information does not relieve users from the duty of conducting their own evaluations and tests. Because the products are subject to continual improvement, we reserve the right to amend the product specifications contained in this catalogue.

Dual P.O. Check Valve Cartridge, SAE 08 / NG 5

Q_{max} = 5 gpm (19 l/min), p_{max} = 3600 psi (250 bar)
Pilot operated
Series PDCV-08…

- A low friction pilot piston is standard
- Compact construction for cavity types: C0840 and AN/C0840 – 3/4-16 UNF
- Separate springs assure fast return to neutral position
- Reliable and high positive re-seat duration
- All exposed parts with zinc-nickel plating
- Can be fitted in a line-mounting body
- Replaces POCD-08…

1 Description

The PDCV-08… series dual pilot operated check valve cartridges are size SAE 08 / NG 5, high performance screw-in valves with a 3/4-16 UNF mounting thread. This unit is a cartridge type, high strength steel guided poppet for realizable low leakage performance, dual hydraulic pilot operated check valve, for use as a blocking or load holding device at high pressure applications.This valve allows free flow from port 2 to port 1 and from port 3 to port 4 and it blocks flow from port 1 to port 2 and from port 4 to port 3.

Flow is allowed from port 1 to port 2 when pilot pressure is sensed at port 3 or flow is allowed from port 4 to port 3 when pilot pressure is sensed at port 2. In order to pilot the valve open, the pressure at port 2 (or port 3) needs to exceed one third of the load pressure from port 4 (or port 1). All external parts of the cartridge are zinc-nickel plated according to DIN EN ISO 19 598 and are thus suitable for use in the harshest operating environments. For self-assembly, please refer to the section related data sheets.

2 Symbol

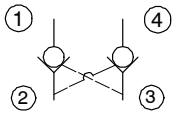

PDCV-08-…-C…

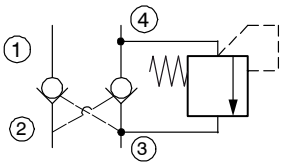

PDCV-08-…-3…

3 Technical data

General characteristics	Description, value, unit
Designation	dual p.o. check valve cartridges
Design	pilot operated
Mounting method	screw-in cartridge 3/4-16 UNF-2A
Size	SAE 08 / NG 5 for cavity type C0840 and AN/C0840
Weight	0.26 lbs (0.12 kg)
Mounting attitude	unrestricted
Ambient temperature range	-40 °F…+250 °F (-40 °C…+120 °C)
Optional internal thermal relief valve	from port 4 to port 3 3000 psi (210 bar), not adjustable

Hydraulic characteristics	Description, value, unit	
Maximum operating pressure	3600 psi	(250 bar)
Maximum flow rate	5 gpm	(19 l/min)
Geometrical differential area ratio	3.0 to 1	
Leakage flow rate	5 drops/min @ 3500 psi	(5 drops/min @ 240 bar)
Flow direction	see symbol	
Hydraulic fluid	HL and HLP mineral oil to DIN 51 524; for other fluids, please contact BUCHER	
Hydraulic fluid temperature range	-40 °F…+250 °F	(-40 °C…+120 °C)
Viscosity range	15…380 mm^2/s (cSt), recommended 20...130 mm^2/s (cSt)	
Minimum fluid cleanliness Cleanliness class to ISO 4406 : 1999	class 18/16/13	

4 Performance graphs

measured with oil viscosity 33 mm^2/s (cSt)

Δp = f (Q) Pressure drop - Flow rate characteristic
"free flow 2 → 1"

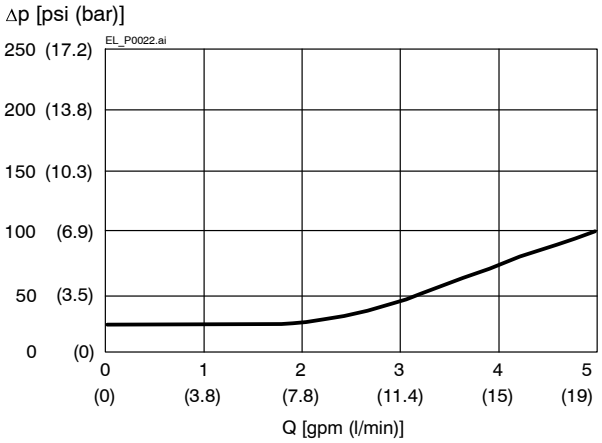

Δp = f (Q) Pressure drop - Flow rate characteristic
"free flow 3 → 4"

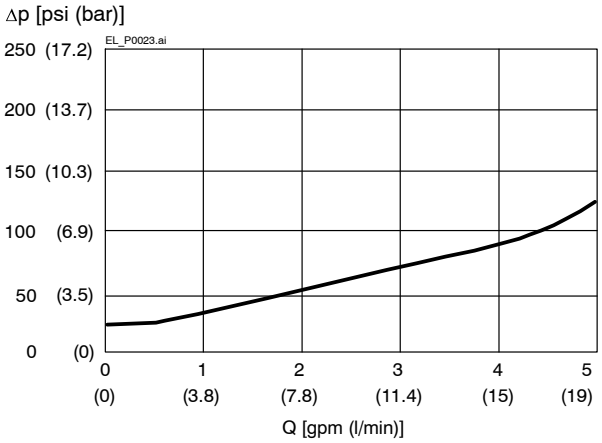

Attention:
When flow passes through the check valve and there is a large pressure difference, the poppet in the main stage can be damaged.

Q = f (Δp; I) Flow rate adjustment characteristic
"pilot 3 flow 1 → 2"

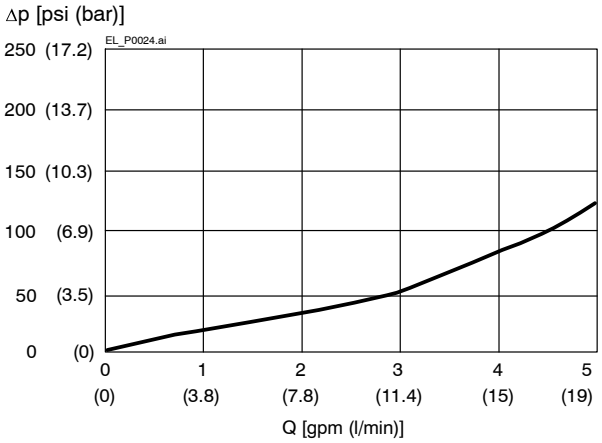

Q = f (I; Δp) Flow rate adjustment characteristic
"pilot 2 flow 4 → 3"

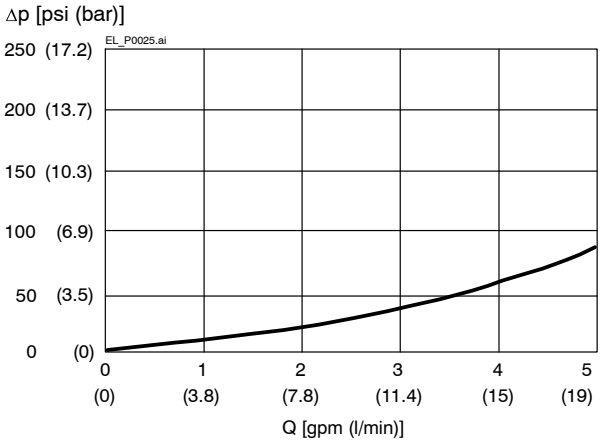

5 Dimensions & sectional view

Dimensions in inches (millimeters)

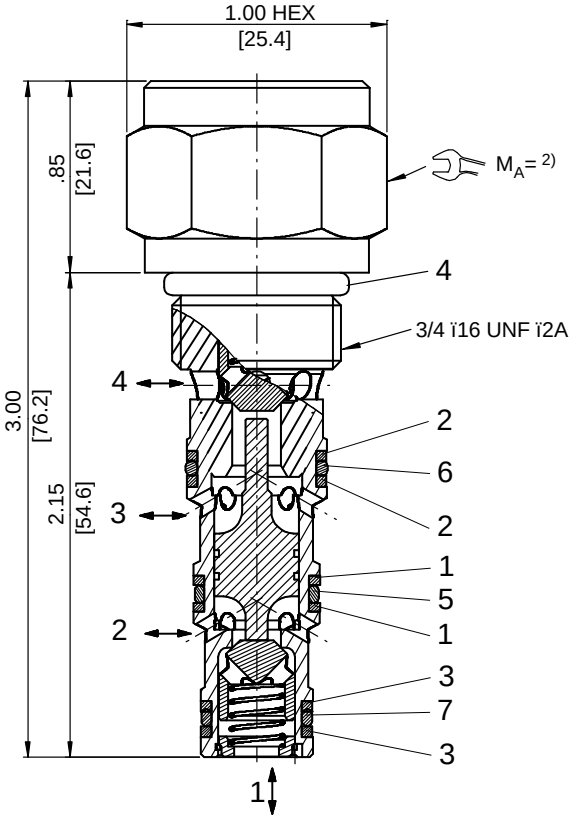

Tightening torque M_A 2) ± 10 %

Cavity type	C0840, AN/C0840
When fitted in steel	37 ft-lbs (50 [Nm])
When fitted in aluminium	27 ft-lbs (37 [Nm])

6 Installation information

Important:
When fitting the cartridges, use the specified tightening torque. No adjustments are necessary, since the cartriges are set in the factory.

ATTENTION!
Only qualified personnel with mechanical skills may carry out any maintenance work. Generally, the only work that should ever be undertaken is to check, and possibly replace, the seals. When changing seals, oil or grease the new seals tho roughly before fitting them.

Seal kit NBR no. SKN-0842 1)

Item	Qty.	Description				
4	1	O-ring	no. 908	0.644 x 0.087	N90	Inch
6	2	O-ring		13.00 x 1.50	FKM	mm
5	2	O-ring		11.00 x 1.50	FKM	mm
7	2	O-ring		9.50 x 1.50	FKM	mm
2	2	Backup ring		13.00 x 1.50 x 1.00 FI0751		mm
1	2	Backup ring		11.30 x 1.50 x 1.00 FI0751		mm
3	2	Backup ring		9.50 x 1.50 x 1.00 FI0751		mm

IMPORTANT!
1) Seal kit with FKM (Viton) seals, no. SKV-0842

WWW.SUMY.IR

7 Ordering code

PDCV - 08 - N - C - O

PDCV	=	pilot operated dual check valve
08	=	size SAE 08 / NG 5
N	=	NBR (Nitrile) seals (standard)
V	=	FKM (Viton) seals (special seals - please consult BUCHER)
C	=	no thermal relief
3	=	3000 psi (210 bar) internal thermal relief from port 4 to port 3, not adjustable
0	=	cartridge only
02BA	=	line-mounting body G1/4 BSPP aluminum
02BS	=	line-mounting body G1/4 BSPP steel
06TA	=	line-mounting body SAE-#6 aluminum
06TS	=	line-mounting body SAE-#6 steel

8 Related data sheets

Reference (Old no.)	Description
520-P-000050	Form tools
520-P-000410	Cavity type C0840
…	Cavity type AN/C0840
520-P-000411	Line-mounting body, 08 Series – 4-way

info.el@bucherhydraulics.com www.bucherhydraulics.com/commoncavity

2021 by Bucher Hydraulics, Inc., 2545 Northwest Parkway, Elgin, Illinois 60124, USA
All rights reserved.
Data is provided for the purpose of product description only, and must not be construed as warranted characteristics in the legal sense. The information does not relieve users from the duty of conducting their own evaluations and tests. Because the products are subject to continual improvement, we reserve the right to amend the product specifications contained in this catalogue.

Classification: 430.315.345.305.305

BUCHER
hydraulics
WWW.SUMY.IR

*HQHUDO LQIRUPDWLRQ &DYLW\

7\SH VHULHV¸ &

'LPHQVLRQV DQG VHFWLRQDO YLHZ

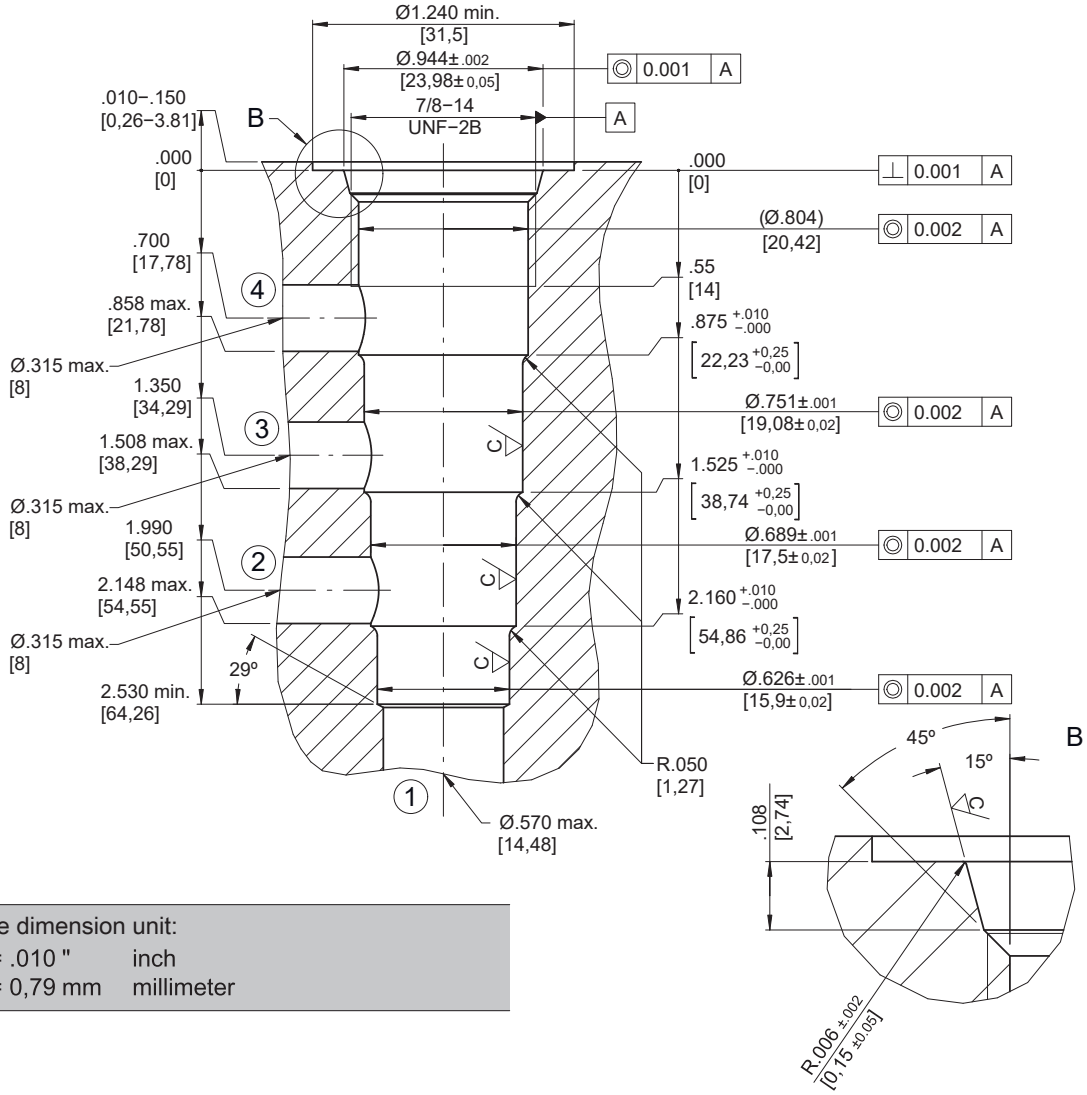

Example dimension unit:		
.010	= .010 "	inch
[0,79]	= 0,79 mm	millimeter

Dimension Tolerances	
Unless otherwise specified	
0.000	± .005″
0.00	± .010″
Angles	± 1/2°

Surface roughness		
Ra	C	D
	45 µin	125 µin
	(1.15 µm)	(3.2 µm)
	D Unless otherwise specified	

Installation information

ATTENTION!
You must maintain the specified positional and diametral tolerances. To ensure trouble-free operation of the screw-in cartridges, we strongly recommend that pilot drilling, boring, reaming and cavity thread-cutting are always performed in one setup.

NOTE!
Cavity type to factory standard.

NOTE!
We offer form tool sets for sale or hire. See data sheet 520-P-000050 for further information.

info.us@bucherhydraulics.com **www.bucherhydraulics.com**

© 2025 by Bucher Hydraulics Inc., Elgin, IL 60124, USA

All rights reserved.
Data is provided for the purpose of product description only, and must not be construed as warranted characteristics in the legal sense. The information does not relieve users from the duty of conducting their own evaluations and tests. Because the products are subject to continual improvement, we reserve the right to amend the product specifications contained in this catalogue.

BUCHER hydraulics
WWW.SUMY.IR

Lock valve
Pilot operated dual check valve

Q_{max} = 40 l/min, p_{max} = 250 bar
hydraulical operation, pilot operated, poppet type
Type series: PDCV-10-...

- Screw-in cartridge valve
- For cavity C1040
- All external parts with zinc-nickel plating according to ASTM-B841
- Installation in threaded port body type B1040
- A low friction pilot piston is standard
- Internal spring ensures fast return to neutral position
- Reliable and high positive re-seat duration
- Replaces valve type POCD-10

Description

The PDCV-10... series of dual pilot operated check valve cartridges are size SAE 10 / NG 8, high performance screw-in valves with a 7/8-14 UNF mounting thread. The cartridge-type unit uses a high strength steel guided poppet to achieve low leakage performance. It is a dual hydraulic pilot operated check valve, for use as a blocking or load-holding device in high pressure applications. This valve allows free flow from port 2 to port 1 and from port 3 to port 4, and it blocks flow from port 1 to port 2 and from port 4 to port 3.

Flow is allowed from port 1 to port 2 when sufficient pilot pressure is applied to port 3 and flow is allowed from port 4 to port 3 when sufficient pilot pressure is applied to port 2. In order to open the valve, the pilot pressure at port 2 or port 3 needs to exceed one-third of the load pressure at port 4 or port 1 respectively. All external parts of the cartridge are zinc-nickel plated according to ASTM B841 and are thus suitable for use in the harshest operating environments.

Symbol

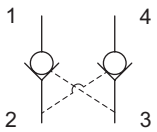

Technical data

General characteristics	Description, value, unit
Function group	Lock valve
Function	Pilot operated dual check valve
Design	Screw-in cartridge valve
Controls	hydraulical operation
Characteristic	pilot operated, poppet type
Construction size	size SAE 10
Thread size	7/8-14 UNF-2A
Mounting attitude	unrestricted
Weight	0.163 kg
Cavity acc. factory standard	For cavity C1040
Tightening torque steel	77.5 Nm
Tightening torque aluminium	50.5 Nm
Tightening torque tolerance	± 5 %
Minimum ambient temperature	- 40 °C
Maximum ambient temperature	+ 120 °C
Surface protection	All external parts with zinc-nickel plating according to AS-TM-B841
Sealing material	see ordering code
Seal kit order number	NBR: SKN-1042 / FKM: SKV-1042

Hydraulic characteristics	Description, value, unit
Maximum operating pressure	250 bar
Maximum flow rate	40 l/min
Flow direction	see symbol
Hydraulic fluid	mineral-based or synthetics with lubricating properties. HL and HLP mineral oil according to DIN 51 524; other fluids on request!
Minimum fluid temperature	-26 °C
Maximum fluid temperature	+ 80 °C
Viscosity range	10 ... 500 mm^2/s (cSt)
Recommended viscosity range	20 ... 130 mm^2/s (cSt)
Minimum fluid cleanliness (cleanlineless class according to ISO 4406:1999)	class 18/16/13
Internal leakage flow rate	5 drops/min 240 bar

Performance graphs

measured with oil viscosity 33.0 mm²/s (cSt)

Δp = f (Q) Pressure drop-flow rate characteristic

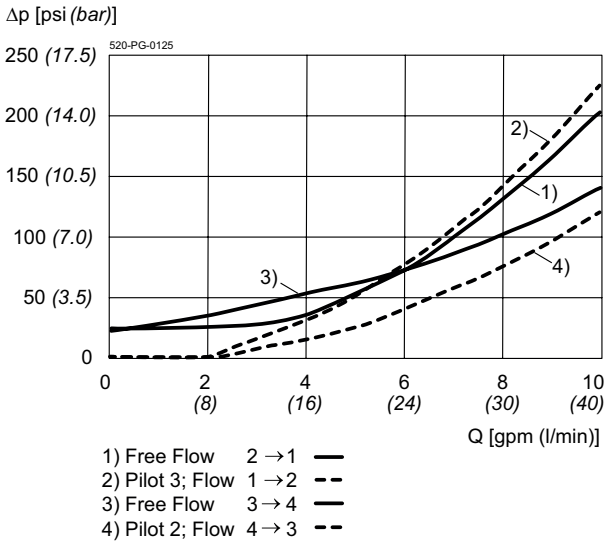

Dimensions and sectional view

Beispiel für die Masseinheit:
Example for the dimensional units:

.031 = 0.031" inch
(0.79) = 0.79 mm millimeter

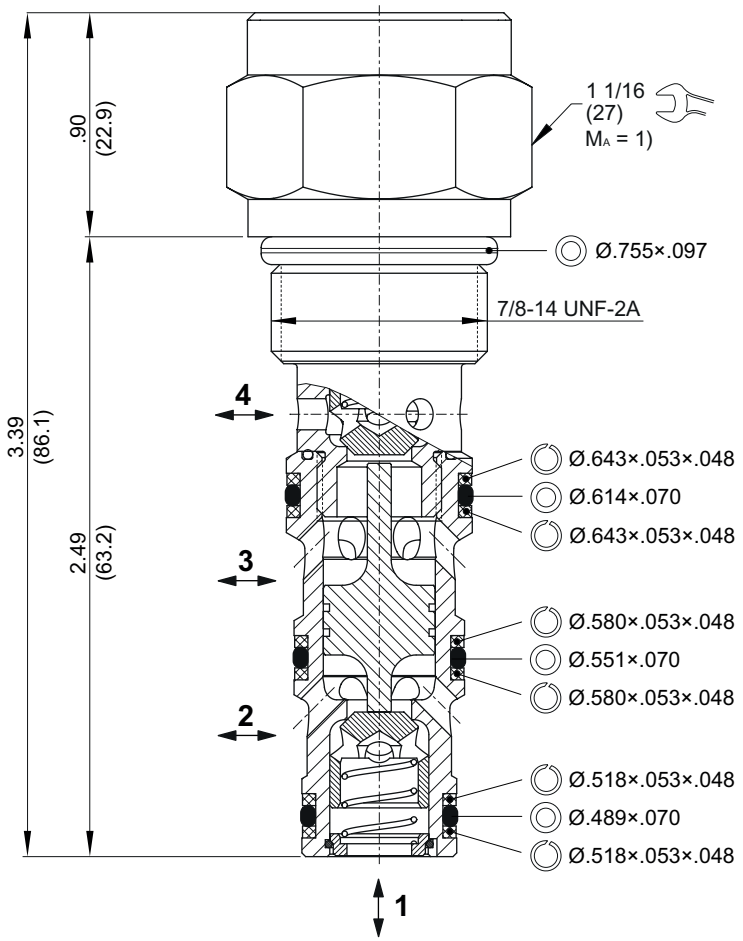

Installation information

ATTENTION!
Only qualified personnel with mechanical skills may carry out any maintenance work. Generally, the only work that should ever be undertaken is to check, and possibly replace, the seals. When changing seals, oil or grease the new seals thoroughly before fitting them.

NOTE!
1) When fitting the screw-in cartridge valve, use the specified tightening torque. The value can be found in the chapter "Technical data".

Ordering code

PDCV - 10 - N - C - 0

PDCV	=	pilot operated dual check valve
10	=	nominal size SAE 10 / NG 8
N1	=	NBR (nitril-butadien-rubber / BUNA) seals *(standard)*
V1	=	FKM (fluorocarbon rubber / VITON) seals *(special seals - please consult BUCHER)*
C	=	no thermal relief
0	=	cartridge only
06TA	=	line-mounting body aluminium SAE #06 ports
06TS	=	line-mounting body steel SAE #06 ports
08TA	=	line-mounting body aluminium SAE #08 ports
08TS	=	line-mounting body steel SAE #08 ports
02BA	=	line-mounting body aluminium G 1/4“ BSPP *
02BS	=	line-mounting body steel G 1/4“ BSPP *
03BA	=	line-mounting body aluminium G 3/8“ BSPP *
03BS	=	line-mounting body steel G 3/8“ BSPP *

IMPORTANT!
* Available on request for quantities of 100 pcs/year

Related data sheets

Reference	Description
520-P-040011	Form tools
520-P-000420	Cavity C1040
520-P-000421	Threaded port body B1040

info.us@bucherhydraulics.com **www.bucherhydraulics.com**

© 2024 by Bucher Hydraulics Inc., Elgin, IL 60124, USA

All rights reserved.
Data is provided for the purpose of product description only, and must not be construed as warranted characteristics in the legal sense. The information does not relieve users from the duty of conducting their own evaluations and tests. Because the products are subject to continual improvement, we reserve the right to amend the product specifications contained in this catalogue.

POCD-10

BUCHER hydraulics

PILOT OPERATED DUAL CHECK VALVE WITH OPTIONAL THERMAL RELIEF

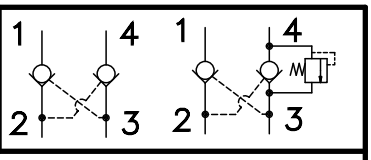

TORQUE:
Steel = 55/60 Ft–Lb. [74/81 Nm]
Aluminum = 35/40 Ft–Lb. [47/54 Nm]

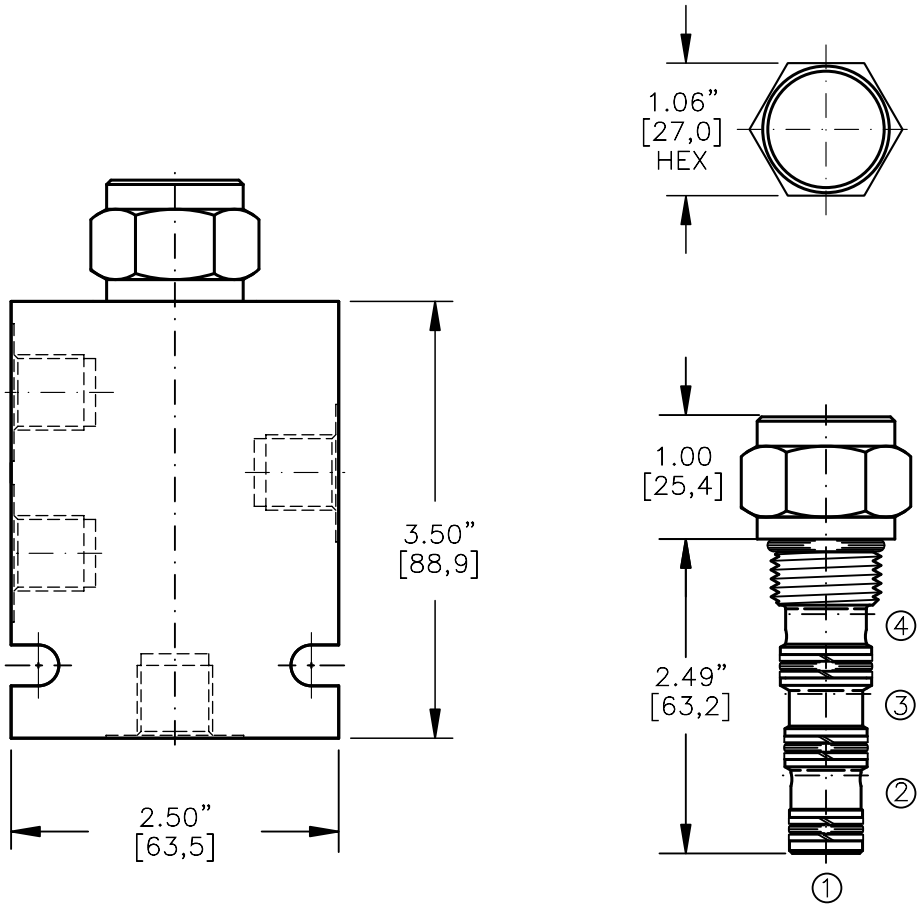

FOR ALUMINUM OR STEEL VALVE HOUSING CONFIGURATIONS SEE PAGE 0–042.1

POCD–10–X–X–X

BASIC

SIZE
10 = 7/8"–14 UNF

SEALS
N = BUNA "N"
V = VITON

TYPE
C = NO THERMAL RELIEF
3 = 3000 PSI RELIEF
5 = 5000 PSI RELIEF

PORTS
0 = CARTRIDGE ONLY
02BX = G 1/4" BSPP
03BX = G 3/8" BSPP
06TX = SAE – #6
08TX = SAE – #8

"A" – ALUM. HOUSING
"S" – STEEL HOUSING

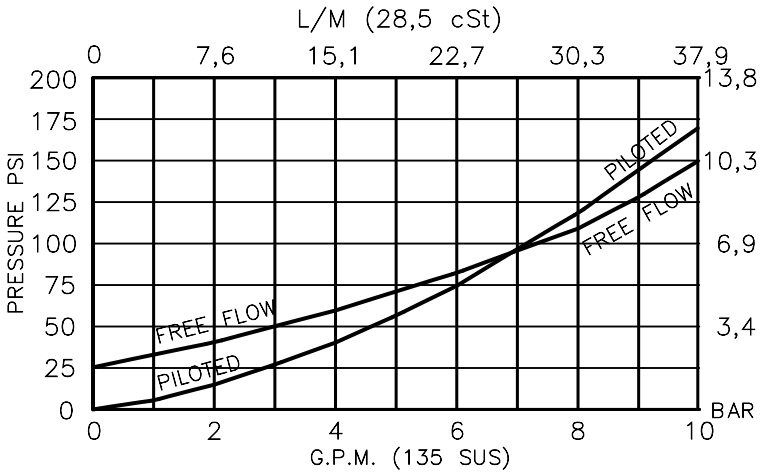

WWW.SUMY.IR

BUCHER hydraulics

PILOT OPERATED DUAL CHECK VALVE WITH OPTIONAL THERMAL RELIEF

DESCRIPTION

This unit is a SCREW IN, cartridge type, guided poppet, hydraulic pilot operated dual check valve, for use as a blocking or load holding device for high pressure applications. Thermal relief option available in one direction.

OPERATIONS

This check valve allows free flow from port 2 to port 1 and from port 3 to port 4. It blocks flow from port 1 to port 2 and from port 4 to port 3 or holds a load. Flow will be allowed from port 1 to port 2 when pilot pressure is applied to port 3 that is higher than one-third of the load pressure at port 1. Flow will be allowed from port 4 to port 3 when pilot pressure is applied to port 2 that is higher than one-third of the load pressure at port 4.
This pilot operated check valve has a 3 to 1 pilot ratio.
Port 4 can be equipped with a thermal relief. The relief is set to open when the pressure in port 4 exceeds the relief setting.

FEATURES AND BENEFITS

All external carbon steel parts are plated for longer life against the elements.
All cartridge valves are 100% functionally tested.
Industry common cavity.

SPECIFICATIONS

OPERATING PRESSURE: 5,000 PSI [350 Bar]
PROOF PRESSURE: 10,000 PSI [700 Bar]
FLOW: 10.0 GPM [37.9 l/m] nominal. See performance chart.
PILOT RATIO: 3 TO 1
INTERNAL LEAKAGE: 5 drops per minute maximum @ 5,000 PSI [350 Bar]
VALVE HOUSINGS: 2500 PSI [175 Bar] = Aluminum - Anodized.
5000 PSI [350 Bar] = Steel - Unplated.
OPERATING TEMPERATURE: -40° to +250° F. [-40° to +120° C.]
OPERATING MEDIA: All general purpose hydraulic fluids such as MIL-H-5606, SAE-#10, SAE-#20, etc.

INSTALLATION: No restrictions.
SEAL KIT: SKN-1042 Buna "N"
SKV-1042 Viton
WEIGHT: .40 lb. [.19 kg] cartridge only.
VALVE CAVITY: #C1040, See Page 0-042.0.

info.el@bucherhydraulics.com www.bucherhydraulics.com/commoncavity

© 2015 by Bucher Hydraulics, Inc., 2545 Northwest Parkway, Elgin, Illinois 60124, USA
All rights reserved.
Data is provided for the purpose of product description only, and must not be construed as warranted characteristics in the legal sense. The information does not relieve users from the duty of conducting their own evaluations and tests. Because the products are subject to continual improvement, we reserve the right to amend the product specifications contained in this catalogue.

Reference: 520-P-011320-EN-00/09.2015

DPOC-08

BUCHER hydraulics

DUAL PILOT OPERATED CHECK VALVE POPPET TYPE, PILOT TO OPEN, 3 TO 1 PILOT RATIO.

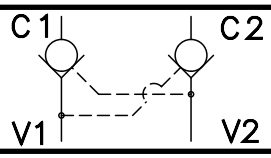

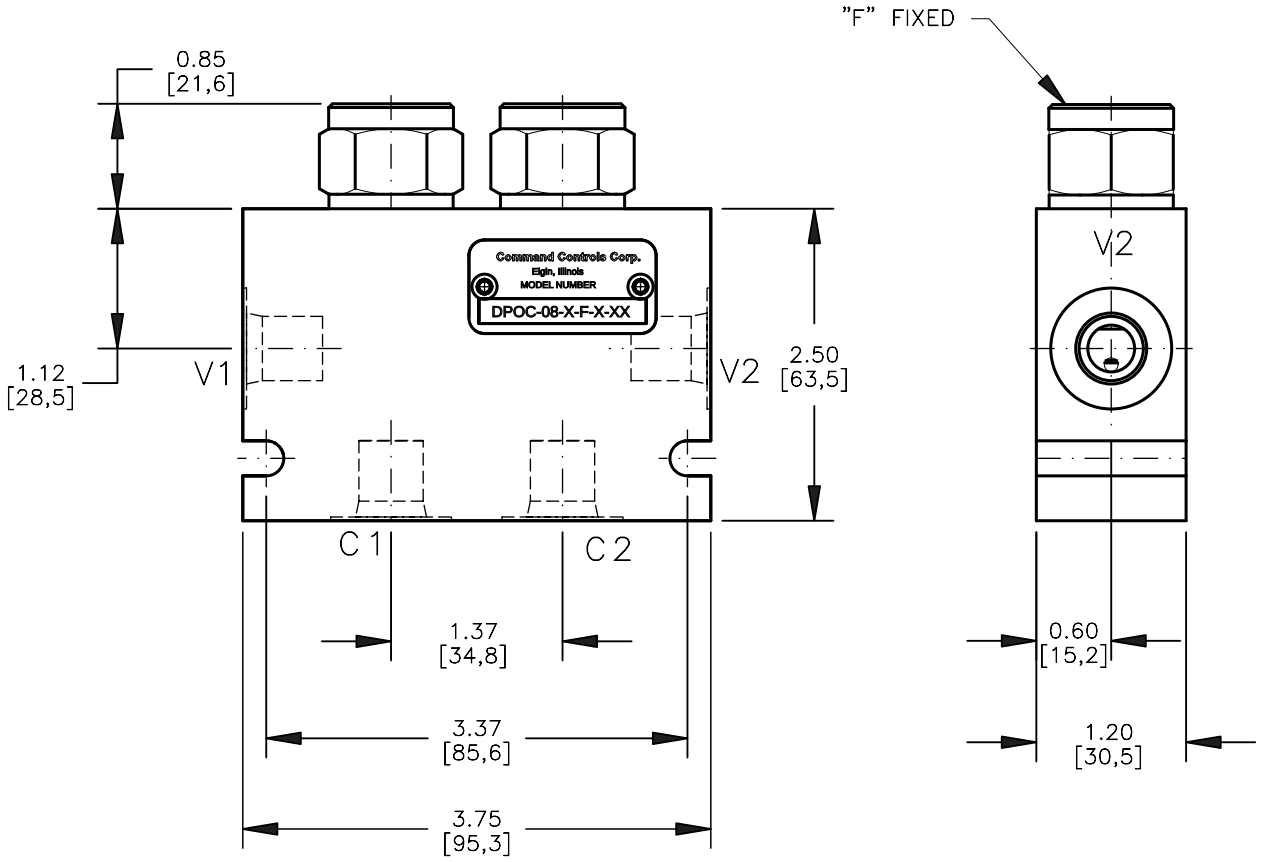

FOR ALUMINUM OR STEEL VALVE HOUSING CONFIGURATIONS SEE PAGE 0–026.0

DPOC–08–X–X–X–XXX

BASIC

SIZE
08 = 3/4"–16 UNF

SEALS
N = BUNA "N"
V = VITON

ADJUSTMENT
F = FIXED

PORTS
03BX = G 3/8" BSPP
04BX = G 1/2" BSPP
08TX = SAE – #8
"A" – ALUM. HOUSING
"S" – STEEL HOUSING

CRACK PRESSURE
010 = 10 PSI
030 = 30 PSI
060 = 60 PSI

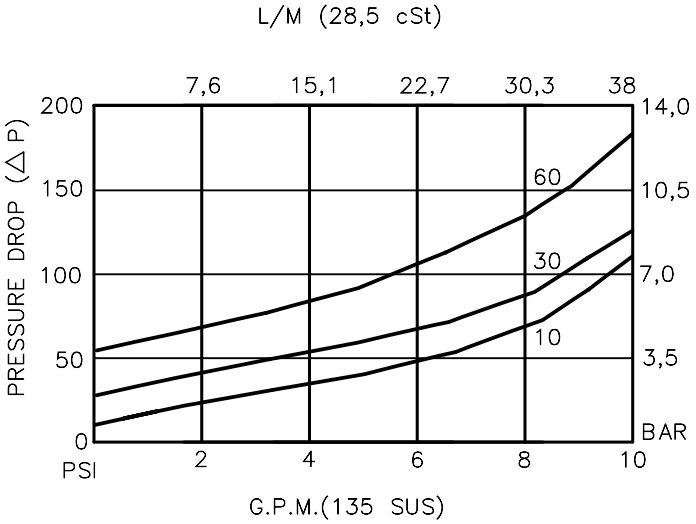

DUAL PILOT OPERATED CHECK VALVE
POPPET TYPE, PILOT TO OPEN, 3 TO 1 PILOT RATIO.

DESCRIPTION

This unit is a cartridge type, guided poppet, with cross line pilot, dual hydraulic pilot operated check valve, for use as a blocking or load holding device for high pressure applications.

OPERATIONS

This valve allows free flow from port V1 to port C1 and V2 to C2 then blocks reverse flow until a pilot pressure is sensed at pilot ports which are connected to ports V1 and V2 therefore opening flow from port C1 or port C2.

This pilot operated check valve has a 3 to 1 pilot ratio, meaning that it takes at least one-third of the load pressure held at port 1 that is required at port 3 to open the valve.

FEATURES AND BENEFITS

A low friction seal on pilot piston is standard.
A separate heavy spring assures fast return of the pilot piston for a very quick, reliable and positve valve re-seat.

All external carbon steel parts are plated for longer life against the elements.
All cartridge valves are 100% functionally tested.
Industry common cavity.

SPECIFICATIONS

OPERATING PRESSURE: 5,000 PSI [350 Bar]
PROOF PRESSURE: 10,000 PSI [700 Bar]
FLOW: 10.0 GPM [38 l/m] nominal. See performance chart.
PILOT RATIO: 3 TO 1
INTERNAL LEAKAGE: 5 drops per minute maximum @ 5,000 PSI [350 Bar]
VALVE HOUSINGS: 2500 PSI [175 Bar] = Aluminum - Anodized.
5000 PSI [350 Bar] = Steel - Unplated.
OPERATING TEMPERATURE: -40° to +250° F. [-40° to +120° C.]
OPERATING MEDIA: All general purpose hydraulic fluids such as MIL-H-5606, SAE-#10, SAE-#20, etc.
INSTALLATION: No restrictions.
SEAL KIT: SKN-0828 Buna "N"
SKV-0828 Viton
WEIGHT: 1.70 lb [.77 kg].
VALVE CAVITIES: #C0825, See Page 0-021.0.

info.el@bucherhydraulics.com www.bucherhydraulics.com/commoncavity

© 2015 by Bucher Hydraulics, Inc., 2545 Northwest Parkway, Elgin, Illinois 60124, USA
All rights reserved.
Data is provided for the purpose of product description only, and must not be construed as warranted characteristics in the legal sense. The information does not relieve users from the duty of conducting their own evaluations and tests. Because the products are subject to continual improvement, we reserve the right to amend the product specifications contained in this catalogue.

WWW.SUMY.IR

DPOC-10

BUCHER hydraulics

DUAL PILOT OPERATED CHECK VALVE POPPET TYPE, PILOT TO OPEN, 3 TO 1 PILOT RATIO.

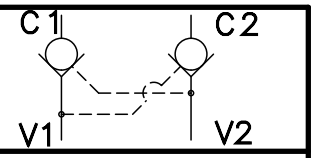

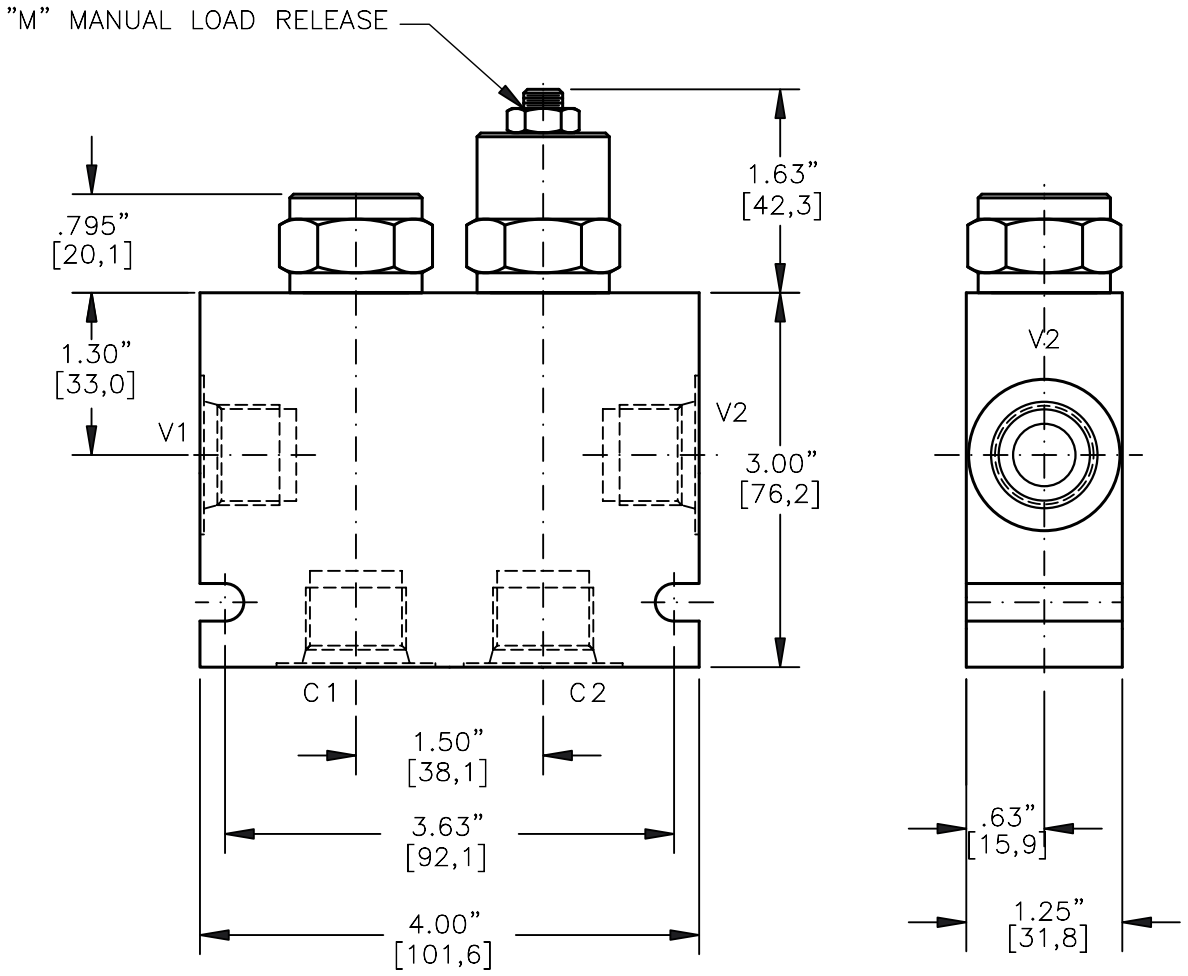

DPOC – 10 – X – X – X – XXX

BASIC

SIZE
10 = 7/8"–14 UNF

SEALS
N = BUNA "N"
V = VITON

ADJUSTMENT
F = FIXED
M = MANUAL RELEASE

PORTS
03BX = G 3/8" BSPP
04BX = G 1/2" BSPP
08TX = SAE – #8
10TX = SAE – #10
"A" – ALUM. HOUSING
"S" – STEEL HOUSING

CRACK PRESSURE
010 = 10 PSI
030 = 30 PSI
060 = 60 PSI

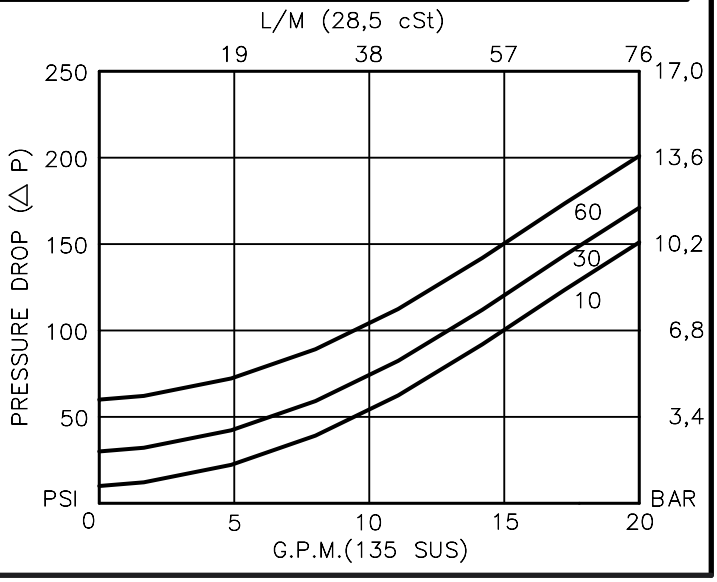

DUAL PILOT OPERATED CHECK VALVE
POPPET TYPE, PILOT TO OPEN, 3 TO 1 PILOT RATIO.

DESCRIPTION

This unit is a cartridge type, guided poppet, with cross line pilot, dual hydraulic pilot operated check valve, for use as a blocking or load holding device for high pressure applications.

OPERATIONS

This valve allows free flow from port V1 to port C1 and V2 to C2 then blocks reverse flow until a pilot pressure is sensed at pilot ports which are connected to ports V1 and V2 therefore opening flow from port C1 or port C2.

This pilot operated check valve has a 3 to 1 pilot ratio, meaning that it takes at least one-third of the load pressure held at port 1 that is required at port 3 to open the valve.

FEATURES AND BENEFITS

A low friction seal on pilot piston is standard.
A separate heavy spring assures fast return of the pilot piston for a very quick, reliable and positve valve re-seat.
Optional screw type manual load release is available.
All external carbon steel parts are plated for longer life against the elements.
All cartridge valves are 100% functionally tested.
Industry common cavity.

SPECIFICATIONS

OPERATING PRESSURE: 5,000 PSI [350 Bar]
PROOF PRESSURE: 10,000 PSI [700 Bar]
FLOW: 18.0 GPM [70 l/m] nominal. See performance chart.
PILOT RATIO: 3 TO 1
INTERNAL LEAKAGE: 5 drops per minute maximum @ 5,000 PSI [350 Bar]
VALVE HOUSINGS: 2500 PSI [175 Bar] = Aluminum - Anodized.
5000 PSI [350 Bar] = Steel - Unplated.
OPERATING TEMPERATURE: -40° to +250° F. [-40° to +120° C.]
OPERATING MEDIA: All general purpose hydraulic fluids such as MIL-H-5606, SAE-#10, SAE-#20, etc.
INSTALLATION: No restrictions.
SEAL KIT: SKN-1028 Buna "N"
SKV-1028 Viton
WEIGHT: 1.85 lb [.92 kg].
VALVE CAVITIES: #C1025, See Page 0-022.0.

info.el@bucherhydraulics.com www.bucherhydraulics.com/commoncavity

© 2015 by Bucher Hydraulics, Inc., 2545 Northwest Parkway, Elgin, Illinois 60124, USA
All rights reserved.
Data is provided for the purpose of product description only, and must not be construed as warranted characteristics in the legal sense. The information does not relieve users from the duty of conducting their own evaluations and tests. Because the products are subject to continual improvement, we reserve the right to amend the product specifications contained in this catalogue.

BUCHER hydraulics

WWW.SUMY.IR
W.SUMY.IRMY.IR

Cavity Type C1240

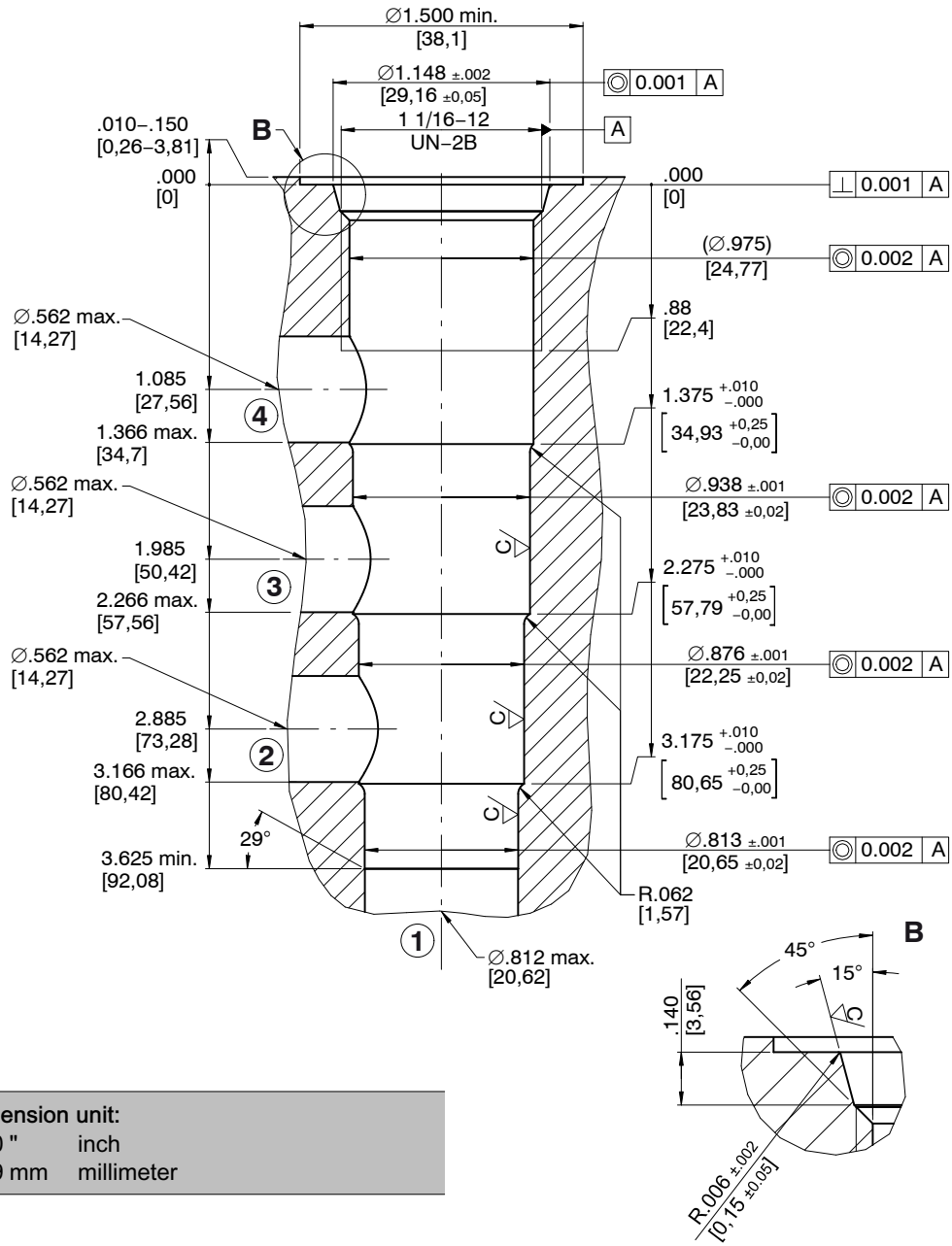

Example dimension unit:		
.010	= .010 "	inch
[0,79]	= 0,79 mm	millimeter

Dimension Tolerances	
Unless otherwise specified	
0.000	± .005″
0.00	± .010″
Angles	± 1/2°

Surface roughness		
Ra	C	D
	45 µin	125 µin
	(1.15 µm)	(3.2 µm)
	D Unless otherwise specified	

Reference: 520-P-000430-EN-01

WWW.SUMY.IR

1 Related data sheets

Reference	(Old no.)	Description
520-P-000050		The form-tool selling programme
520-P-000431	(0–043.1)	Line-mounting body, 12 Series – 4-way
520-P-000432	(0–043.2)	Line-mounting body, 12 Series – 4-way (flow divider)

info.el@bucherhydraulics.com www.bucherhydraulics.com/commoncavity

© 2016 by Bucher Hydraulics, Inc., 2545 Northwest Parkway, Elgin, Illinois 60124, USA
All rights reserved.
Data is provided for the purpose of product description only, and must not be construed as warranted characteristics in the legal sense. The information does not relieve users from the duty of conducting their own evaluations and tests. Because the products are subject to continual improvement, we reserve the right to amend the product specifications contained in this catalogue.

Classification: 430.Cavity.…

WWW.SUMY.IR

DPOC-12

BUCHER hydraulics

DUAL PILOT OPERATED CHECK VALVE POPPET TYPE, PILOT TO OPEN, 3 TO 1 PILOT RATIO.

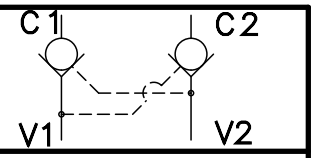

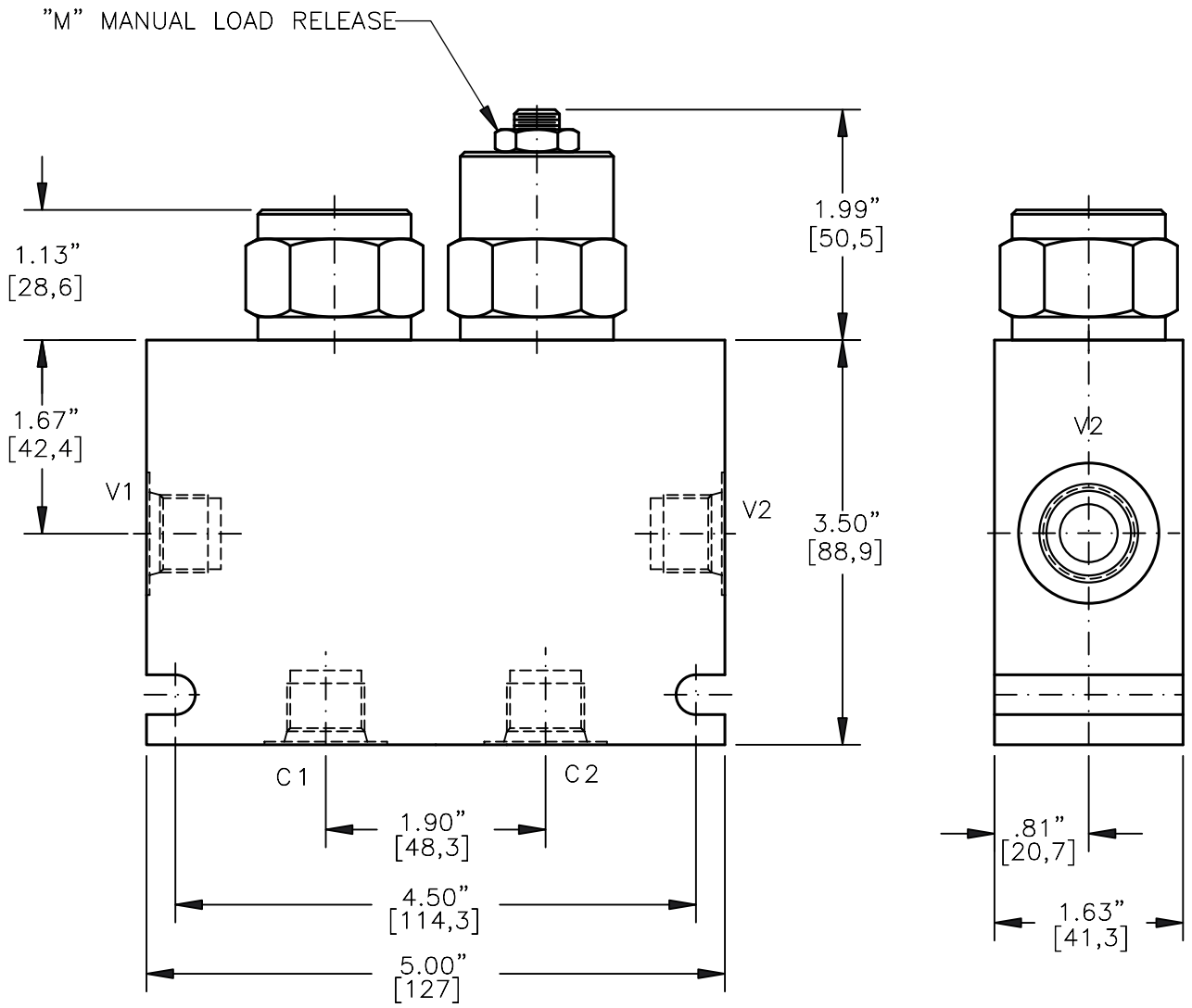

DPOC – 12 – X – X – X – XXX

BASIC

SIZE
12 = 1.062"–12 UNF

SEALS
N = BUNA "N"
V = VITON

ADJUSTMENT
F = FIXED
M = MANUAL RELEASE

PORTS
04BX = G 1/2" BSPP
06BX = G 3/4" BSPP
10TX = SAE – #10
12TX = SAE – #12
"A" – ALUM. HOUSING
"S" – STEEL HOUSING

CRACK PRESSURE
010 = 10 PSI
030 = 30 PSI
060 = 60 PSI

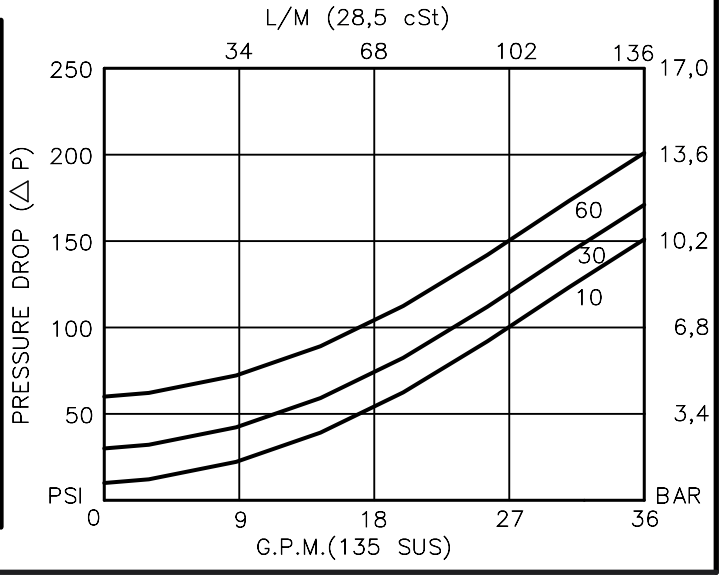

DUAL PILOT OPERATED CHECK VALVE
POPPET TYPE, PILOT TO OPEN, 3 TO 1 PILOT RATIO.

DESCRIPTION

This unit is a cartridge type, guided poppet, with cross line pilot, dual hydraulic pilot operated check valve, for use as a blocking or load holding device for high pressure applications.

OPERATIONS

This valve allows free flow from port V1 to port C1 and V2 to C2 then blocks reverse flow until a pilot pressure is sensed at pilot ports which are connected to ports V1 and V2 therefore opening flow from port C1 or port C2.

This pilot operated check valve has a 3 to 1 pilot ratio, meaning that it takes at least one-third of the load pressure held at port 1 that is required at port 3 to open the valve.

FEATURES AND BENEFITS

A low friction seal on pilot piston is standard.
A separate heavy spring assures fast return of the pilot piston for a very quick, reliable and positve valve re-seat.
Optional screw type manual load release is available.
All external carbon steel parts are plated for longer life against the elements.
All cartridge valves are 100% functionally tested.

SPECIFICATIONS

OPERATING PRESSURE: 5,000 PSI [350 Bar]
PROOF PRESSURE: 10,000 PSI [700 Bar]
FLOW: 36.0 GPM [136.3 l/m] nominal. See performance chart.
PILOT RATIO: 3 TO 1
INTERNAL LEAKAGE: 5 drops per minute maximum @ 5,000 PSI [350 Bar]
VALVE HOUSINGS: 2500 PSI [175 Bar] = Aluminum - Anodized.
5000 PSI [350 Bar] = Steel - Unplated.
OPERATING TEMPERATURE: -40° to +250° F. [-40° to +120° C.]
OPERATING MEDIA: All general purpose hydraulic fluids such as MIL-H-5606, SAE-#10, SAE-#20, etc.
INSTALLATION: No restrictions.
FILTRATION: 25 microns or better.
SEAL KIT: SKN-1228 Buna "N"
SKV-1228 Viton
WEIGHT: 2.65 lb [1.21 kg] Aluminium. 5.25 lbs [2.38] Steel.
VALVE CAVITIES: #C1225

info.el@bucherhydraulics.com

www.bucherhydraulics.com/commoncavity

© 2015 by Bucher Hydraulics, Inc., 2545 Northwest Parkway, Elgin, Illinois 60124, USA
All rights reserved.
Data is provided for the purpose of product description only, and must not be construed as warranted characteristics in the legal sense. The information does not relieve users from the duty of conducting their own evaluations and tests. Because the products are subject to continual improvement, we reserve the right to amend the product specifications contained in this catalogue.

BUCHER hydraulics
WWW.SUMY.IR

Check valve
Pilot operated dual check

Q_{max} = 100 l/min, p_{max} = 350 bar
hydraulical operation, pilot operated, poppet type
Type series: DERV 10-...

- Screw-in cartridge valve
- All external parts with zinc-nickel coating according to DIN EN ISO 19598
- Two-stage principle (decompression / main opening)
- Load pressure closing cone poppet valve
- Seat tight shut-off
- Compact construction
- Hardened, polished seat section and cone
- Prevents creep of hydraulically clamped actuators

Description

The double pilot-operated check valves, series DERV 10-..., are size 10, two stage and high performance screw-in valves with an M40×1,5 mounting thread. They are designed on the poppet/seat principle and the A1 to A and B1 to B flow paths are therefore virtually leak-free. The check function can be overridden by applying a suitable pressure on the other side. In the A to A1 and B to B1 directions, flow can pass freely through the screw-in valves (opening pressure = 3.0 bar). All external parts of the screw-in valves are zinc-nickel plated and are thus suitable for use in the harshest operating environments. These screw-in valves are predominantly used in certain mobile and industrial applications to prevent creep movements of the hydraulically clamped actuators (e.g. cylinders) and to maintain the precise position.

Symbol

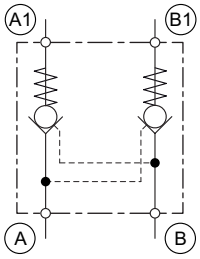

Technical Data

General Characteristics	Description, value, unit
Function group	Check valve
Function	Pilot operated dual check
Design	Screw-in cartridge valve
Controls	hydraulical operation
Characteristic	pilot operated, poppet type
Construction size	size 10
Thread size	M40×1,5
Mounting attitude	unrestricted
Weight	0.92 kg
Tightening torque steel	250 Nm
Tightening torque tolerance	± 10 %
Minimum ambient temperature	- 25 °C
Maximum ambient temperature	+ 100 °C
Surface protection	All external parts with zinc-nickel coating according to DIN EN ISO 19598
Available seal types	several seal types available, see ordering code
Seal kit order number	NBR: 30003013120 / others on request

Hydraulic Characteristics	Description, value, unit
Maximum operating pressure	350 bar
Restriction of the operating pressure	max. static pressure: 500 bar
Maximum flow rate	100 l/min
Flow direction	see symbol
Hydraulic fluid	HL and HLP mineral oil according to DIN 51 524; other fluids on request!
Minimum fluid temperature	- 20 °C
Maximum fluid temperature	+ 80 °C
Viscosity range	2.8 ... 1500 mm^2/s (cSt)
Recommended viscosity range	10 ... 380 mm^2/s (cSt)
Minimum fluid cleanliness (cleanlineless class according to ISO 4406:1999)	class 20/18/15
Effective hydraulic pilot ratio (p.o. check valve)	1:18
Opening pressure	3 bar
Definition of cracking pressure for check valve	(load pressure ÷ 18) + 3 bar

NOTE!
For other values please contact Bucher Hydraulics.

Performance graphs

measured with oil viscosity 33.0 mm²/s (cSt)

Δp = f (Q) Pressure drop-flow rate characteristic

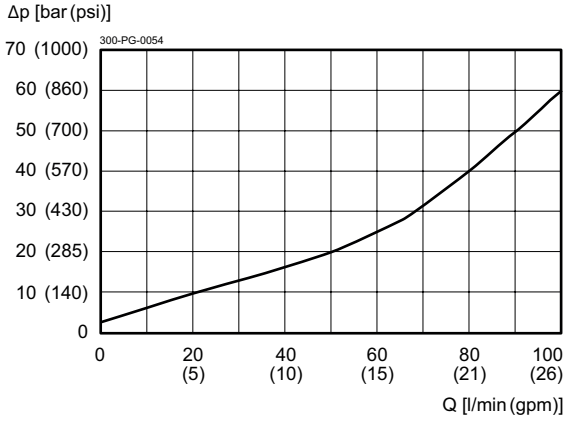

A to A1 and B to B1

p = f (Q) Pressure-flow rate

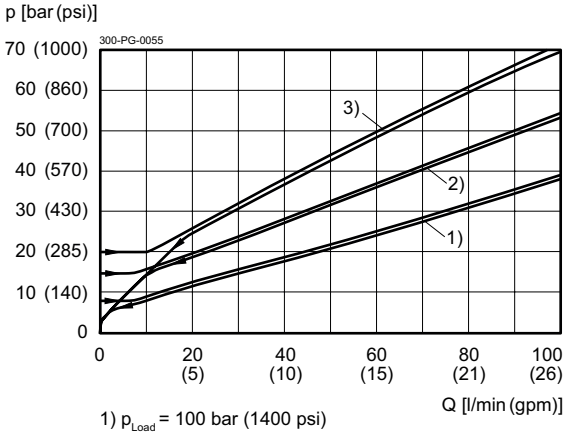

1) p_{Load} = 100 bar (1400 psi)
2) p_{Load} = 200 bar (2900 psi)
3) p_{Load} = 300 bar (4300 psi)

A1 to A and B1 to B

Dimensions and sectional view

Beispiel für die Masseinheit:
Example for the dimensional units:

0.79 = 0.79 mm millimeter
(.031) = 0.031" inch

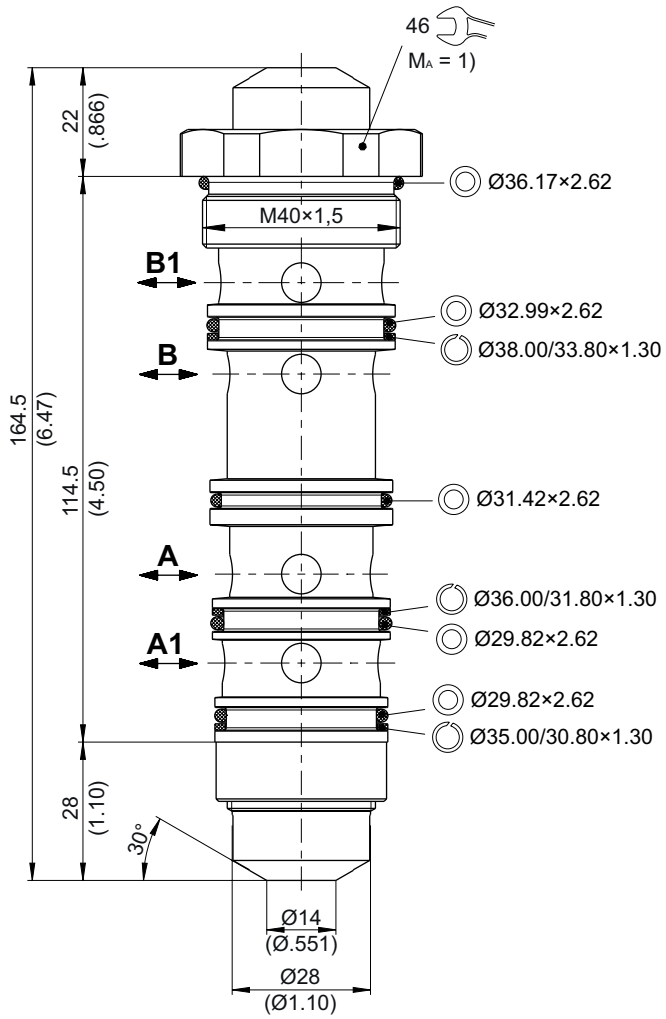

Installation information

NOTE!
1) When fitting the screw-in cartridge valve, use the specified tightening torque. The value can be found in the chapter "Technical data".

ATTENTION!
Only qualified personnel with mechanical skills may carry out any maintenance work. Generally, the only work that should ever be undertaken is to check, and possibly replace, the seals. When changing seals, oil or grease the new seals thoroughly before fitting them.

NOTE!
The seals are not available individually. The seal kit order number can be found in the chapter "Technical data".

Cavity

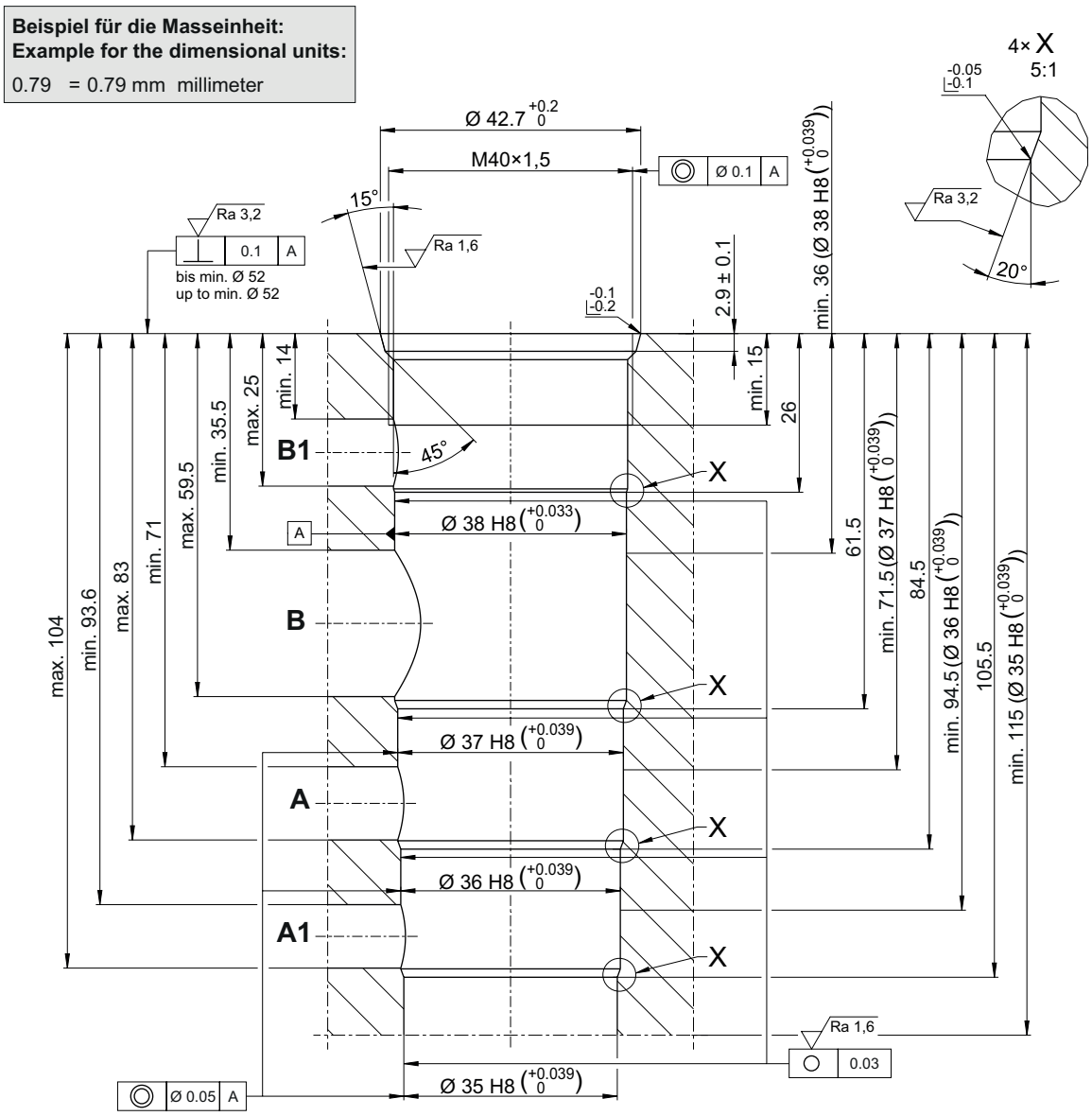

HINWEIS!
NOTE!

Empfohlene Anschlussbohrungen:
Recommended connection bores: A, A1, B, B1: Ø 10

Toleranzen nach:
Tolerances according to: DIN ISO 2768-mK

Ra 6,3 (√) -0.1 -0.3 +0.3 +0.1

NOTE!
You must maintain the specified positional and diametral tolerances. To ensure trouble-free operation of the screw-in cartridges, we strongly recommend that pilot drilling, boring, reaming and cavity thread-cutting are always performed in one setup.

Ordering code

Ex. DERV 10 - N

DERV	=	double pilot operated cartridge check valve
10	=	size 10
N	=	NBR (nitril-butadien-rubber / BUNA) seals *(standard)*
V	=	FKM (fluorocarbon rubber / VITON) seals
T	=	MIL (low temperature) seals *(special seals - please consult BUCHER)*

info.ch@bucherhydraulics.com **www.bucherhydraulics.com**

© 2021 by Bucher Hydraulics AG, 6345 Neuheim, Switzerland

All rights reserved.
Data is provided for the purpose of product description only, and must not be construed as warranted characteristics in the legal sense. The information does not relieve users from the duty of conducting their own evaluations and tests. Because the products are subject to continual improvement, we reserve the right to amend the product specifications contained in this catalogue.

BUCHER hydraulics

WWW.SUMY.IR

Check valve
Pilot operated dual check

Q_{max} = 70 l/min, p_{max} = 350 bar
hydraulical operation, pilot operated, poppet type
Type series: DERV 8-...

- Screw-in cartridge valve
- All external parts with zinc-nickel coating according to DIN EN ISO 19598
- Two-stage principle (decompression / main opening)
- Load pressure closing cone poppet valve
- Seat tight shut-off
- Compact construction
- Hardened, polished seat section and cone
- Prevents creep of hydraulically clamped actuators

Description

The double pilot-operated check valves, series DERV 8-..., are size 8, two stage and high performance screw-in valves with an M30×1,5 mounting thread. They are designed on the poppet/seat principle and the A1 to A and B1 to B flow paths are therefore virtually leak-free. The check function can be overridden by applying a suitable pressure on the other side. In the A to A1 and B to B1 directions, flow can pass freely through the screw-in valves (opening pressure = 3.0 bar). All external parts of the screw-in valves are zinc-nickel plated and are thus suitable for use in the harshest operating environments. These screw-in valves are predominantly used in certain mobile and industrial applications to prevent creep movements of the hydraulically clamped actuators (e.g. cylinders) and to maintain the precise position.

Symbol

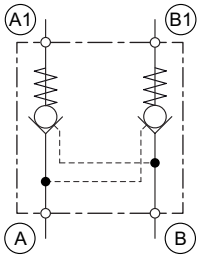

Technical Data

General Characteristics	Description, value, unit
Function group	Check valve
Function	Pilot operated dual check
Design	Screw-in cartridge valve
Controls	hydraulical operation
Characteristic	pilot operated, poppet type
Construction size	size 8
Thread size	M30×1,5
Mounting attitude	unrestricted
Weight	0.45 kg
Tightening torque steel	200 Nm
Tightening torque tolerance	± 10 %
Minimum ambient temperature	- 25 °C
Maximum ambient temperature	+ 100 °C
Surface protection	All external parts with zinc-nickel coating according to DIN EN ISO 19598
Available seal types	several seal types available, see ordering code
Seal kit order number	NBR: 3000308277 / FKM: 3000308278 / MIL: 3000308279

Hydraulic Characteristics	Description, value, unit
Maximum operating pressure	350 bar
Restriction of the operating pressure	max. static pressure: 500 bar
Maximum flow rate	70 l/min
Flow direction	see symbol
Hydraulic fluid	HL and HLP mineral oil according to DIN 51 524; other fluids on request!
Minimum fluid temperature	- 20 °C
Maximum fluid temperature	+ 80 °C
Viscosity range	2.8 ... 1500 mm^2/s (cSt)
Recommended viscosity range	10 ... 380 mm^2/s (cSt)
Minimum fluid cleanliness (cleanlineless class according to ISO 4406:1999)	class 20/18/15
Effective hydraulic pilot ratio (p.o. check valve)	1:18
Opening pressure	3 bar
Definition of cracking pressure for check valve	(load pressure ÷ 18) + 3 bar

NOTE!
For other values please contact Bucher Hydraulics.

Performance graphs

measured with oil viscosity 33.0 mm²/s (cSt)

Δp = f (Q) Pressure drop-flow rate characteristic

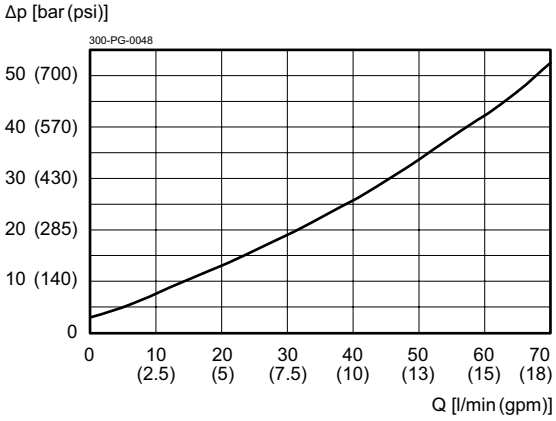

A to A1 and B to B1

p = f (Q) Pressure-flow rate

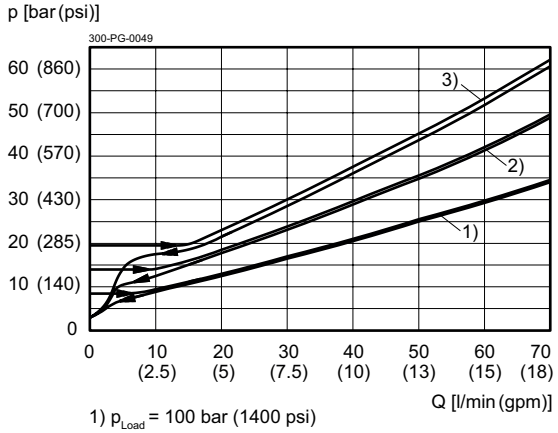

1) p_{Load} = 100 bar (1400 psi)
2) p_{Load} = 200 bar (2900 psi)
3) p_{Load} = 300 bar (4300 psi)

A1 to A and B1 to B

Dimensions and sectional view

Beispiel für die Masseinheit:
Example for the dimensional units:

0.79 = 0.79 mm millimeter
(.031) = 0.031" inch

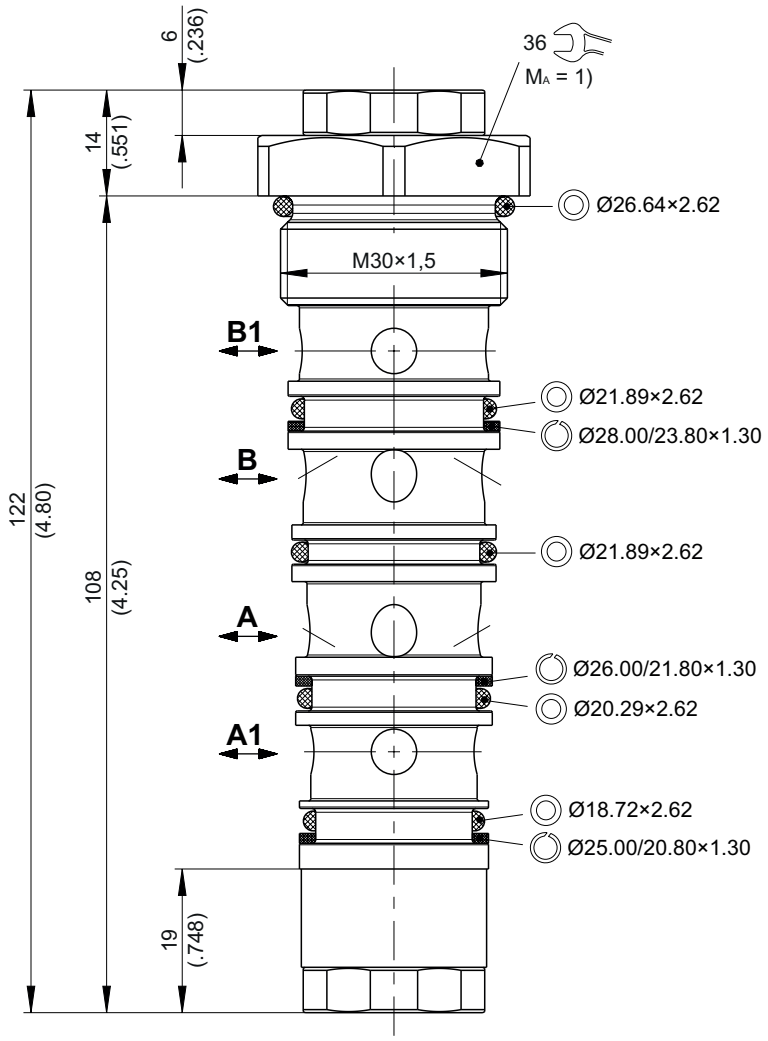

Installation information

NOTE!
1) When fitting the screw-in cartridge valve, use the specified tightening torque. The value can be found in the chapter "Technical data".

NOTE!
The seals are not available individually. The seal kit order number can be found in the chapter "Technical data".

ATTENTION!
Only qualified personnel with mechanical skills may carry out any maintenance work. Generally, the only work that should ever be undertaken is to check, and possibly replace, the seals. When changing seals, oil or grease the new seals thoroughly before fitting them.

Cavity

Beispiel für die Masseinheit:
Example for the dimensional units:

0.79 = 0.79 mm millimeter

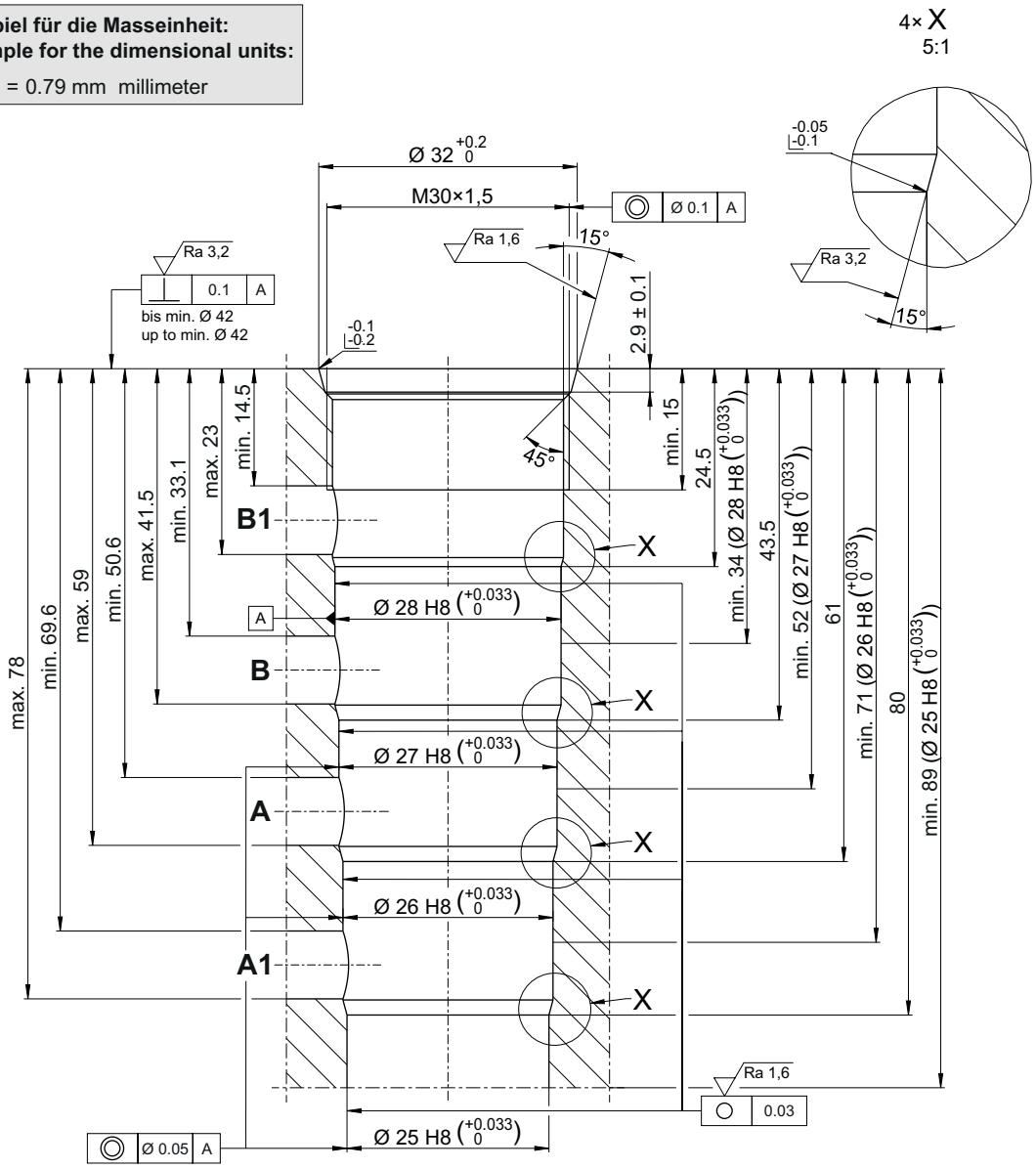

HINWEIS!
NOTE!

Empfohlene Anschlussbohrungen:
Recommended connection bores: A, A1, B, B1: Ø 8

Toleranzen nach:
Tolerances according to: DIN ISO 2768-mK

Ra 6,3 (√) -0.1 -0.3 +0.3 +0.1

NOTE!

You must maintain the specified positional and diametral tolerances. To ensure trouble-free operation of the screw-in cartridges, we strongly recommend that pilot drilling, boring, reaming and cavity thread-cutting are always performed in one setup.

Ordering code

Ex. DERV 8 - N

DERV = double pilot operated cartridge check valve
8 = size 8
N = NBR (nitril-butadien-rubber / BUNA) seals *(standard)*
V = FKM (fluorocarbon rubber / VITON) seals
T = MIL (low temperature) seals
(special seals - please consult BUCHER)

info.ch@bucherhydraulics.com www.bucherhydraulics.com

© 2021 by Bucher Hydraulics AG, 6345 Neuheim, Switzerland

All rights reserved.
Data is provided for the purpose of product description only, and must not be construed as warranted characteristics in the legal sense. The information does not relieve users from the duty of conducting their own evaluations and tests. Because the products are subject to continual improvement, we reserve the right to amend the product specifications contained in this catalogue.

Cavity Type C0430

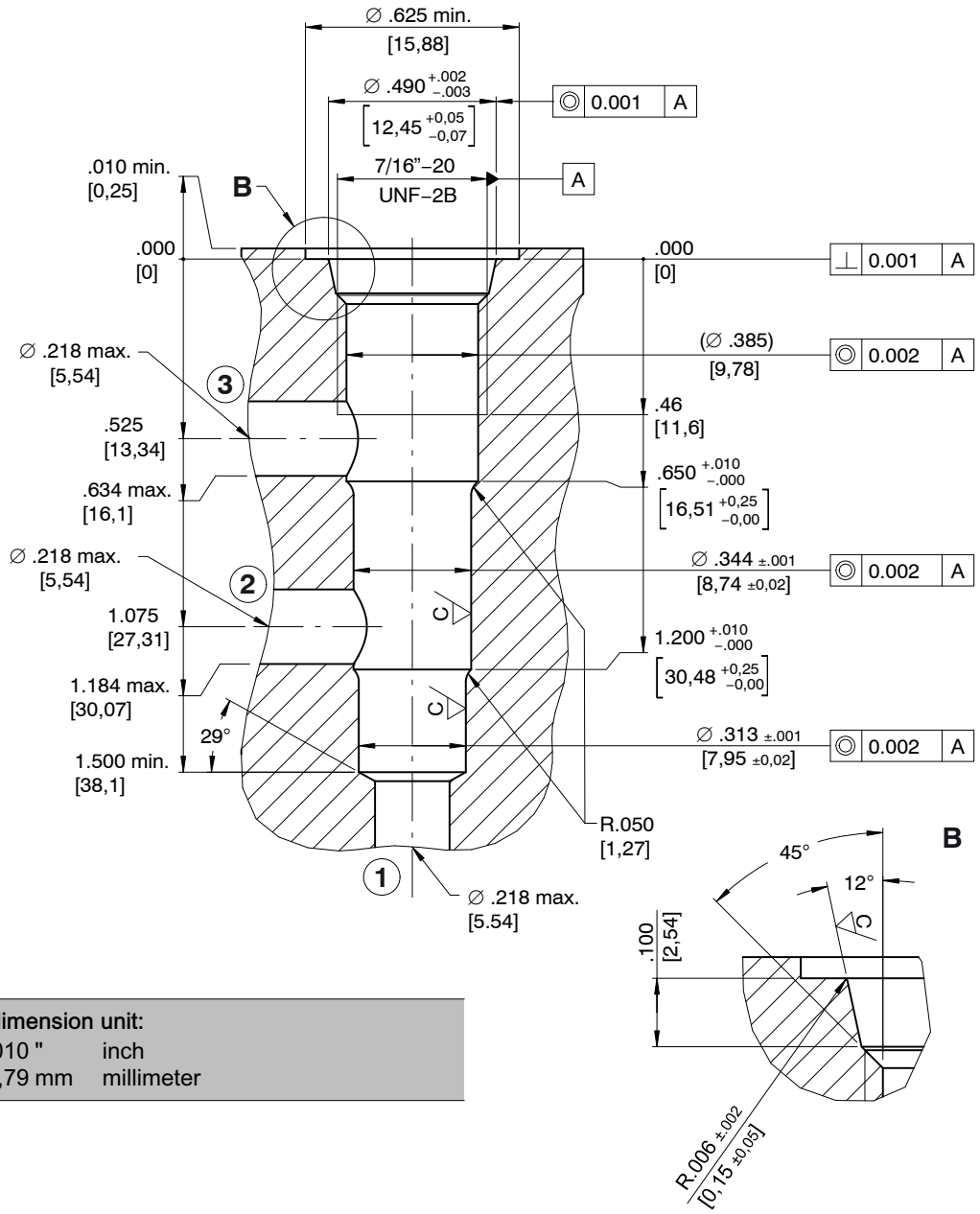

Example dimension unit:
.010 = .010 " inch
[0,79] = 0,79 mm millimeter

Dimension Tolerances	
Unless otherwise specified	
0.000	± .005″
0.00	± .010″
Angles	± 1/2°

Surface roughness		
Ra	C	D
	45 µin	125 µin
	(1.15 µm)	(3.2 µm)
	D Unless otherwise specified	

WWW.SUMY.IR

1 Related data sheets

Reference	(Old no.)	Description
520-P-000050		The form-tool selling programme

info.el@bucherhydraulics.com www.bucherhydraulics.com/commoncavity

© 2016 by Bucher Hydraulics, Inc., 2545 Northwest Parkway, Elgin, Illinois 60124, USA
All rights reserved.
Data is provided for the purpose of product description only, and must not be construed as warranted characteristics in the legal sense. The information does not relieve users from the duty of conducting their own evaluations and tests. Because the products are subject to continual improvement, we reserve the right to amend the product specifications contained in this catalogue.

Classification: 430.Cavity.…

WWW.SUMY.IR

BDSV-04

BUCHER hydraulics

SHUTTLE VALVE TWO–POSITION, THREE–WAY, BALL TYPE.

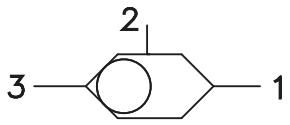

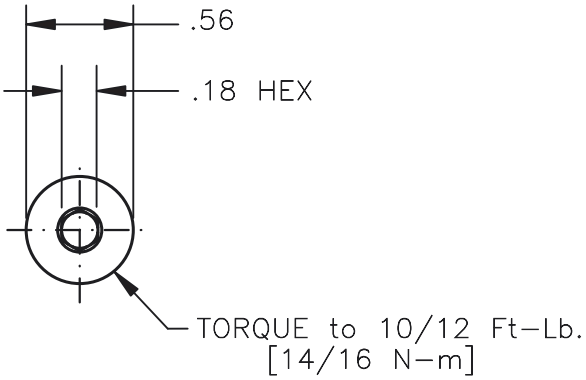

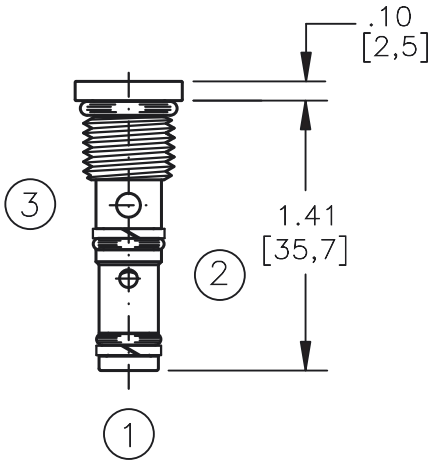

BDSV–04–X–3–0–00

- BASIC
- SIZE
  04 = 7/16"–20 UNF
- SEALS
  N = BUNA "N"
  V = VITON
- STYLE
  3 = 3 WAY
- PORTS
  00 = CARTRIDGE ONLY

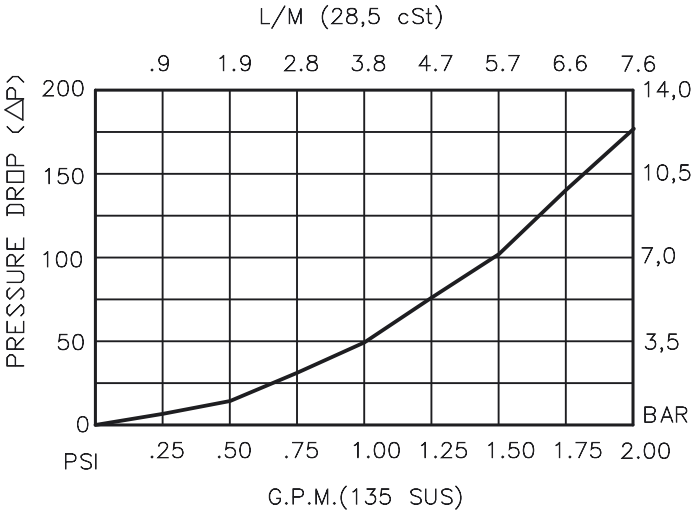

SHUTTLE VALVE TWO–POSITION, THREE–WAY, BALL TYPE.

DESCRIPTION

This unit is a SCREW IN, CARTRIDGE TYPE, THREE PORTED, TWO POSITION, HYDRAULIC SHUTTLE VALVE.

OPERATIONS

This valve senses the higher of the two input pressures port #1 or #3 and routes it to the output port #2.

FEATURES AND BENEFITS

A steel ball and a sharp steel seat assures rugged and reliable performance.
All external carbon steel parts are plated for longer life against the elements.
All cartridge valves are 100% functionally tested.
Industry common cavity.

SPECIFICATIONS

OPERATING PRESSURE: 5,000 PSI [350 Bar]
PROOF PRESSURE: 10,000 PSI [700 Bar]
FLOW: 1.5 GPM [6 l/m] nominal. See performance chart.
INTERNAL LEAKAGE: 5 drops/min maxium at 5,000 PSI.
VALVE HOUSINGS: 2500 PSI [175 Bar] = Aluminum – Anodized.
5000 PSI [350 Bar] = Steel – Unplated.
OPERATING TEMPERATURE: –40° to +250° F. [–40° to +120° C.]
OPERATING MEDIA: All general purpose hydraulic fluids such as MIL–H–5606, SAE–#10, SAE–#20, etc.
INSTALLATION: No restriction.
FILTRATION: 25 microns or better.
SEAL KIT NUMBER: SKN–0431 FOR BUNA "N".
SKV–0431 FOR VITON "V".
WEIGHT: 0.03 lb [.014kg] cartridge only.
VALVE CAVITY: #C0430, See Page 0–030.0.

info.el@bucherhydraulics.com www.bucherhydraulics.com/commoncavity

© 2015 by Bucher Hydraulics, Inc., 2545 Northwest Parkway, Elgin, Illinois 60124, USA
All rights reserved.
Data is provided for the purpose of product description only, and must not be construed as warranted characteristics in the legal sense. The information does not relieve users from the duty of conducting their own evaluations and tests. Because the products are subject to continual improvement, we reserve the right to amend the product specifications contained in this catalogue.

BUCHER hydraulics
WWW.SUMY.IR

General information
Cavity

Type series: C0830

Dimensions and sectional view

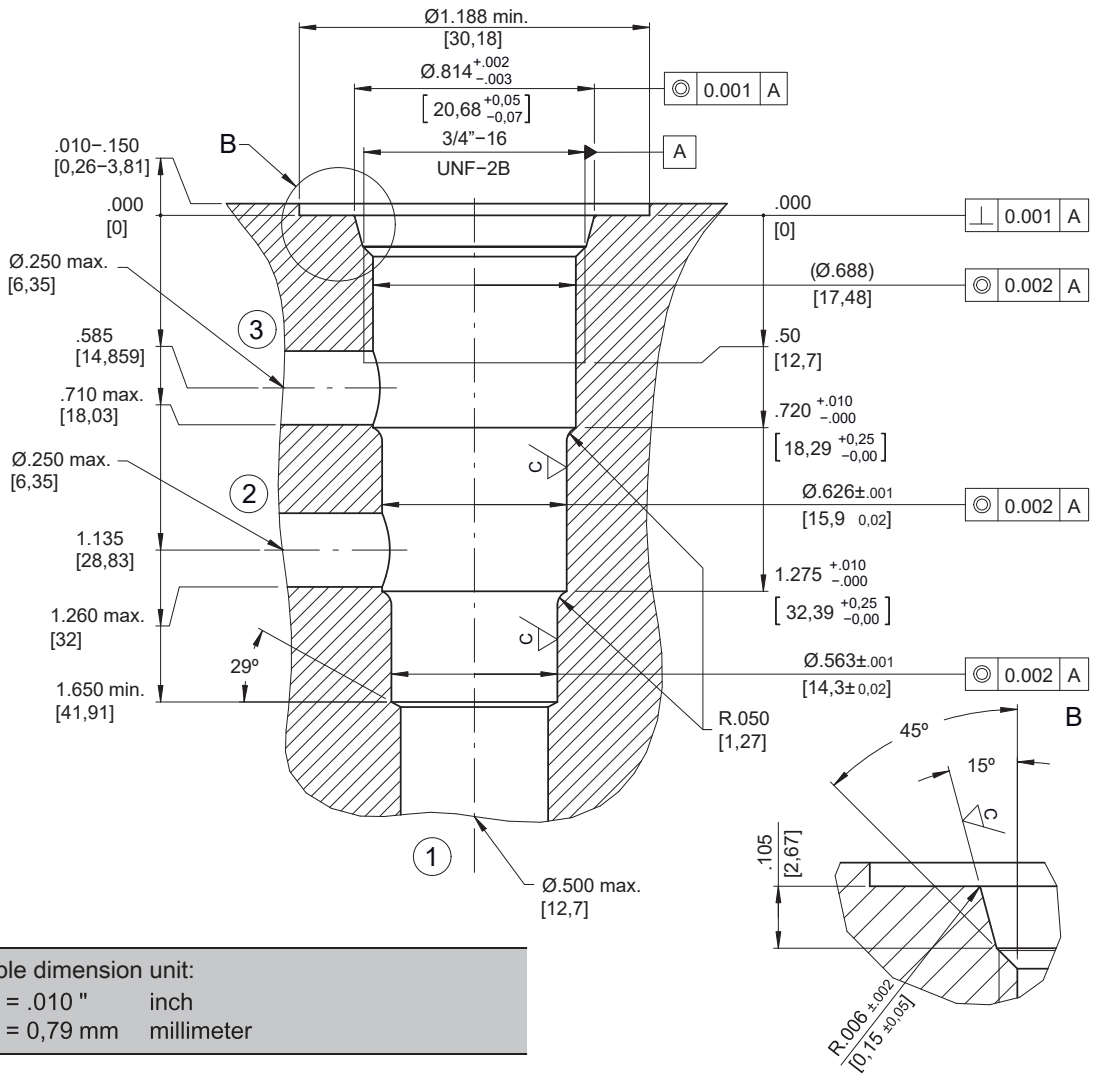

Example dimension unit:		
.010	= .010 "	inch
[0,79]	= 0,79 mm	millimeter

Dimension Tolerances	
Unless otherwise specified	
0.000	± .005″
0.00	± .010″
Angles	± 1/2°

Surface roughness		
Ra	C	D
	45 µin	125 µin
	(1.15 µm)	(3.2 µm)
	D	Unless otherwise specified

Installation information

ATTENTION!
You must maintain the specified positional and diametral tolerances. To ensure trouble-free operation of the screw-in cartridges, we strongly recommend that pilot drilling, boring, reaming and cavity thread-cutting are always performed in one setup.

NOTE!
Cavity type to factory standard.

NOTE!
We offer form tool sets for sale or hire. See data sheet 520-P-000050 for further information.

info.us@bucherhydraulics.com **www.bucherhydraulics.com**

© 2025 by Bucher Hydraulics Inc., Elgin, IL 60124, USA

All rights reserved.
Data is provided for the purpose of product description only, and must not be construed as warranted characteristics in the legal sense. The information does not relieve users from the duty of conducting their own evaluations and tests. Because the products are subject to continual improvement, we reserve the right to amend the product specifications contained in this catalogue.

BUCHER hydraulics

SHUTTLE VALVE TWO–POSITION, THREE–WAY, BALL TYPE.

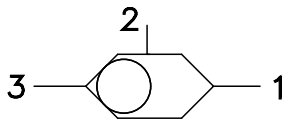

TORQUE:
Steel = 35/40 Ft–Lb. [47/54 Nm]
Aluminum = 25/30 Ft–Lb. [34/41 Nm]

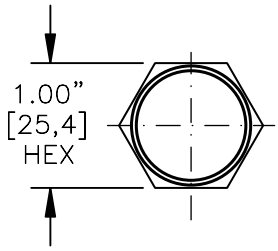

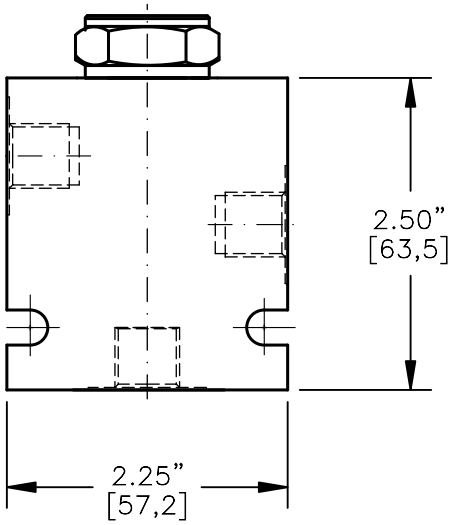

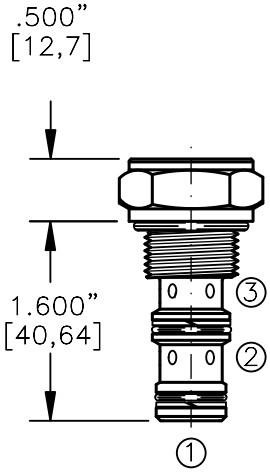

FOR ALUMINUM OR STEEL VALVE HOUSING CONFIGURATIONS SEE PAGE 0–031.1

BDSV–08–X–3–X–00

- BASIC
- SIZE
  08 = 3/4"–16 UNF
- SEALS
  N = BUNA "N"
  V = VITON
- STYLE
  3 = 3 WAY
- PORTS
  0 = CARTRIDGE ONLY
  02BX = G 1/4" BSPP
  06TX = SAE – #6
  - "A" – ALUM. HOUSING
  - "S" – STEEL HOUSING

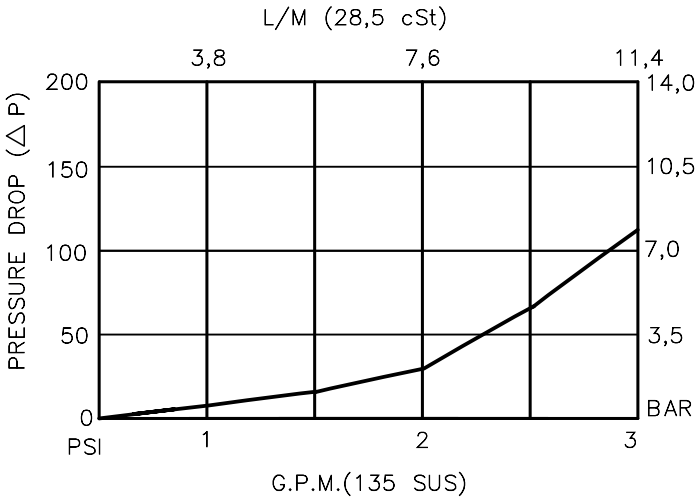

BUCHER hydraulics

SHUTTLE VALVE TWO-POSITION, THREE-WAY, BALL TYPE.

DESCRIPTION

This unit is a SCREW IN, CARTRIDGE TYPE, THREE PORTED, TWO POSITION, HYDRAULIC SHUTTLE VALVE.

OPERATIONS

This valve senses the higher of the two input pressures port #1 or #3 and routes it to the output port #2.

FEATURES AND BENEFITS

A steel ball and a sharp steel seat assures rugged and reliable performance.
All external carbon steel parts are plated for longer life against the elements.
All cartridge valves are 100% functionally tested.
Industry common cavity.

SPECIFICATIONS

OPERATING PRESSURE: 5,000 PSI [350 Bar]
PROOF PRESSURE: 10,000 PSI [700 Bar]
FLOW: 3.0 GPM [12 l/m] nominal. See performance chart.
INTERNAL LEAKAGE: 5 drops/min maxium at 5,000 PSI.
VALVE HOUSINGS: 2500 PSI [175 Bar] = Aluminum – Anodized.
5000 PSI [350 Bar] = Steel – Unplated.
OPERATING TEMPERATURE: –40° to +250° F. [–40° to +120° C.]
OPERATING MEDIA: All general purpose hydraulic fluids such as MIL–H–5606, SAE–#10, SAE–#20, etc.
INSTALLATION: No restriction.
FILTRATION: 25 microns or better.
SEAL KIT NUMBER: SKN–0831 FOR BUNA "N".
SKV–0831 FOR VITON.
WEIGHT: 0.20 lb [.09 kg] cartridge only.
VALVE CAVITY: #C0830, See Page 0–031.0.

info.el@bucherhydraulics.com www.bucherhydraulics.com/commoncavity

© 2015 by Bucher Hydraulics, Inc., 2545 Northwest Parkway, Elgin, Illinois 60124, USA
All rights reserved.
Data is provided for the purpose of product description only, and must not be construed as warranted characteristics in the legal sense. The information does not relieve users from the duty of conducting their own evaluations and tests. Because the products are subject to continual improvement, we reserve the right to amend the product specifications contained in this catalogue.

BUCHER hydraulics

SHUTTLE VALVE
TWO–POSITION, TWO–WAY, BALL TYPE.

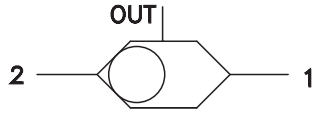

TORQUE:
Steel = 55/60 Ft–Lb. [74/81 Nm]
Aluminum = 35/40 Ft–Lb. [47/54 Nm]

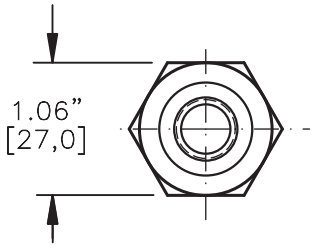

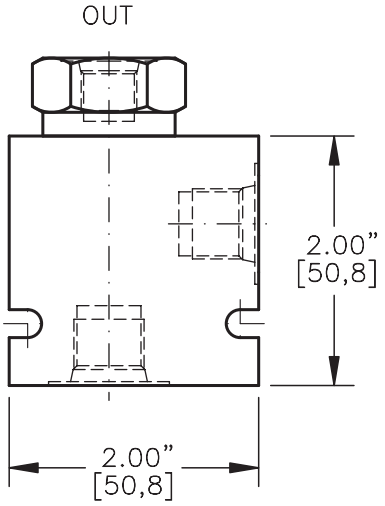

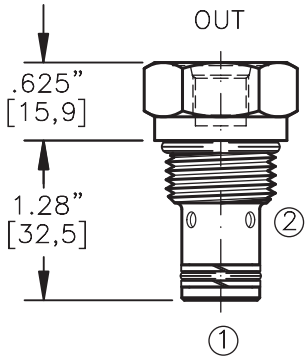

FOR ALUMINUM OR STEEL VALVE HOUSING CONFIGURATIONS SEE PAGE 0–012.1

BDSV–10–X–2–X–XX

BASIC

SIZE
10 = 7/8"–14 UNF

SEALS
N = BUNA "N"
V = VITON

STYLE
2 = 2 WAY

PORTS
0 = CARTRIDGE ONLY
02BX = G 1/4" BSPP
03BX = G 3/8" BSPP
06TX = SAE – #6
08TX = SAE – #8
"A" – ALUM. HOUSING
"S" – STEEL HOUSING

OUTLET PORTS
2B = 1/4" BSPP
4T = SAE – #4

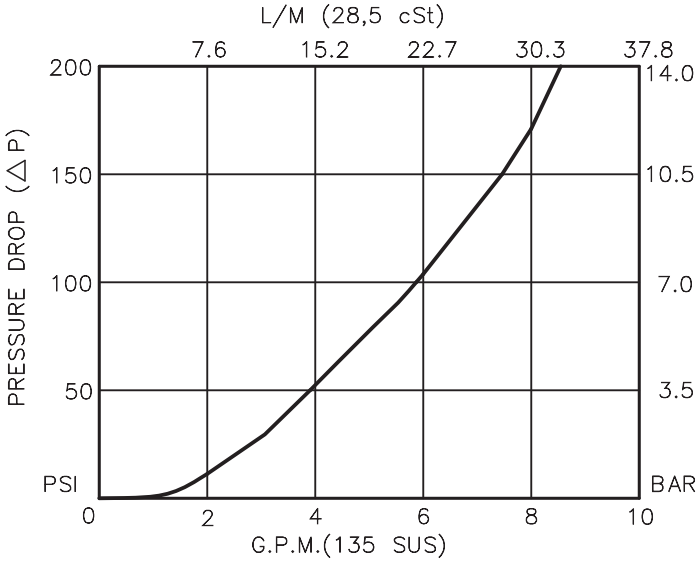

BUCHER hydraulics

SHUTTLE VALVE
TWO–POSITION, TWO–WAY, BALL TYPE.

DESCRIPTION

This unit is a SCREW IN, CARTRIDGE TYPE, TWO PORTED WITH EXTERNAL THIRD OUTLET PORT, TWO POSITION, HYDRAULIC SHUTTLE VALVE.

OPERATIONS

This valve senses the higher of the two input pressures port #1 or #2 and routes it to the OUT port.

FEATURES AND BENEFITS

A steel ball and a sharp steel seat assures rugged and reliable performance.
All external carbon steel parts are plated for longer life against the elements.
All cartridge valves are 100% functionally tested.
Industry common cavity.

SPECIFICATIONS

OPERATING PRESSURE: 5,000 PSI [350 Bar]
PROOF PRESSURE: 10,000 PSI [700 Bar]
FLOW: 6.0 GPM [23 l/m] nominal. See performance chart.
INTERNAL LEAKAGE: 5 drops/min maxium at 5,000 PSI.
VALVE HOUSINGS: 2500 PSI [175 Bar] = Aluminum – Anodized.
5000 PSI [350 Bar] = Steel – Unplated.
OPERATING TEMPERATURE: –40° to +250° F. [–40° to +120° C.]
OPERATING MEDIA: All general purpose hydraulic fluids such as MIL–H–5606, SAE–#10, SAE–#20, etc.
INSTALLATION: No restriction.
FILTRATION: 25 microns or better.
SEAL KIT NUMBER: SKN–1022 for buna "N".
SKV–1022 for viton.
WEIGHT: 0.19 lb [.086 kg] cartridge only.
VALVE CAVITY: #C1020, See Page 0–012.0.

info.el@bucherhydraulics.com www.bucherhydraulics.com/commoncavity

© 2015 by Bucher Hydraulics, Inc., 2545 Northwest Parkway, Elgin, Illinois 60124, USA
All rights reserved.
Data is provided for the purpose of product description only, and must not be construed as warranted characteristics in the legal sense. The information does not relieve users from the duty of conducting their own evaluations and tests. Because the products are subject to continual improvement, we reserve the right to amend the product specifications contained in this catalogue.

BUCHER hydraulics
WWW.SUMY.IR

Cavity Type C1030

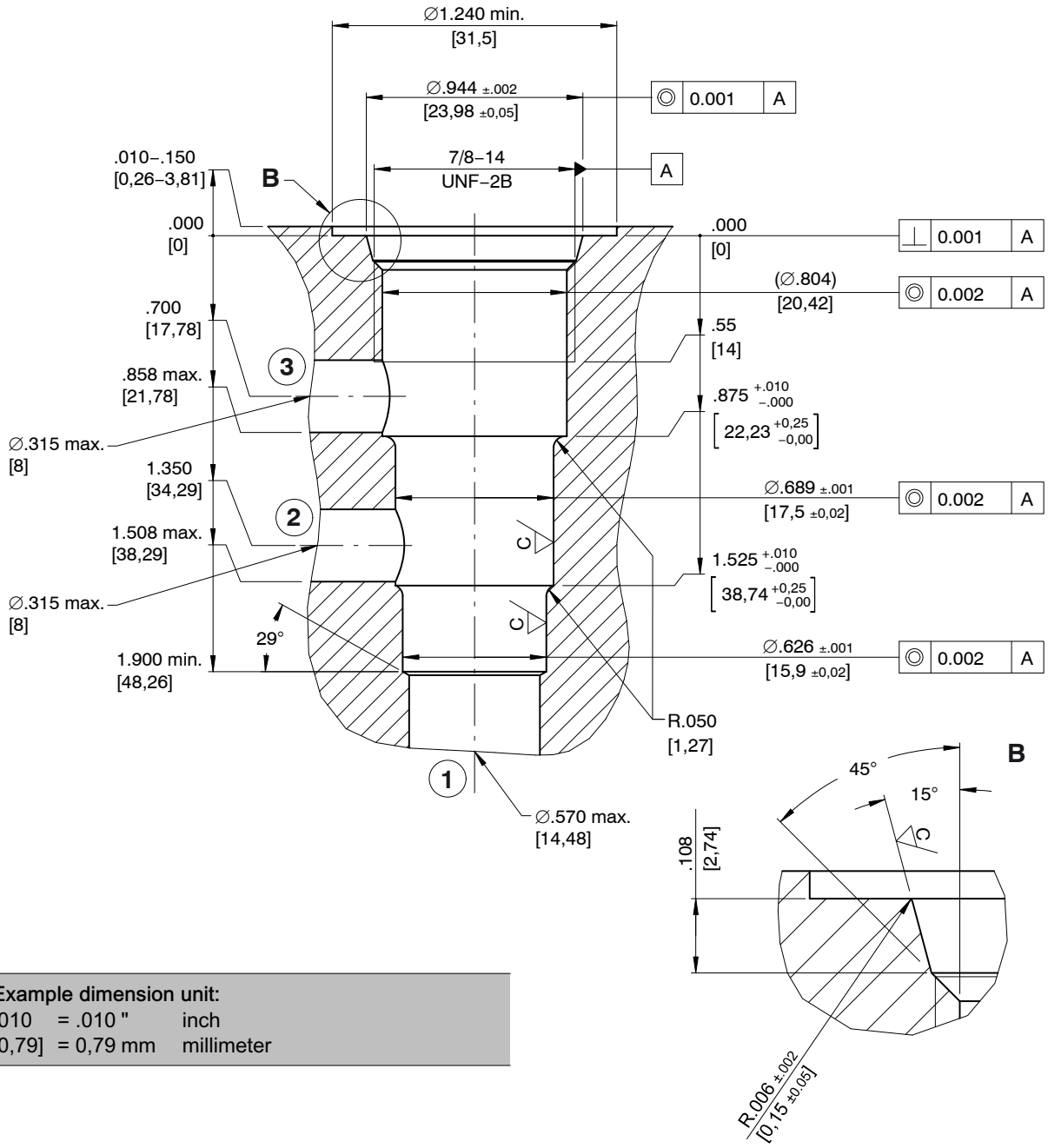

Example dimension unit:		
.010	= .010 "	inch
[0,79]	= 0,79 mm	millimeter

Dimension Tolerances	
Unless otherwise specified	
0.000	± .005″
0.00	± .010″
Angles	± 1/2°

Surface roughness		
Ra	C	D
	45 µin	125 µin
	(1.15 µm)	(3.2 µm)
	D	Unless otherwise specified

Reference: 520-P-000320-EN-01

WWW.SUMY.IR

1 Related data sheets

Reference	(Old no.)	Description
520-P-000050		The form-tool selling programme
520-P-000321	(0–032.1)	Line-mounting body, 10 Series – 3-way

info.el@bucherhydraulics.com www.bucherhydraulics.com/commoncavity

© 2016 by Bucher Hydraulics, Inc., 2545 Northwest Parkway, Elgin, Illinois 60124, USA
All rights reserved.
Data is provided for the purpose of product description only, and must not be construed as warranted characteristics in the legal sense. The information does not relieve users from the duty of conducting their own evaluations and tests. Because the products are subject to continual improvement, we reserve the right to amend the product specifications contained in this catalogue.

Classification: 430.Cavity.…

BUCHER hydraulics

SHUTTLE VALVE
TWO–POSITION, THREE–WAY, BALL TYPE.

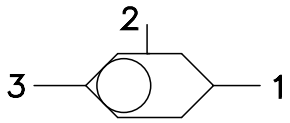

TORQUE:
Steel = 55/60 Ft–Lb. [74/81 Nm]
Aluminum = 35/40 Ft–Lb. [47/54 Nm]

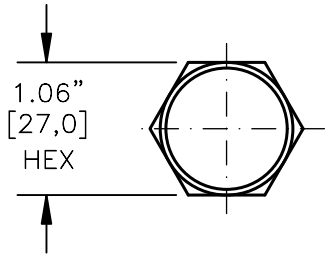

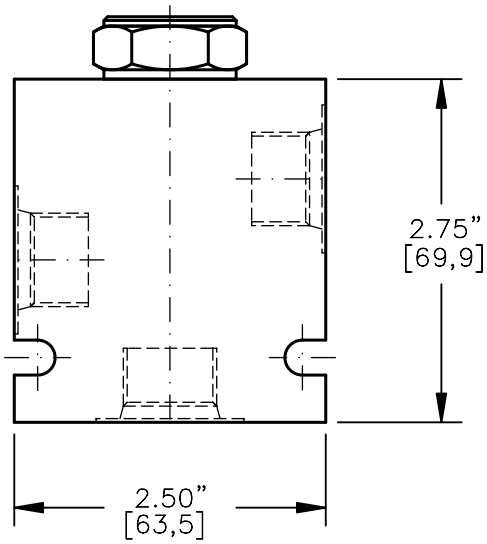

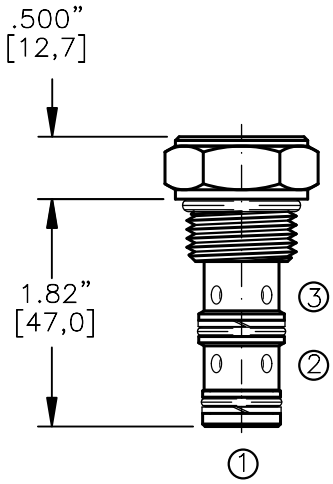

FOR ALUMINUM OR STEEL VALVE HOUSING CONFIGURATIONS SEE PAGE 0–032.1

BDSV–10–X–3–X–00

BASIC

SIZE
10 = 7/8"–14 UNF

SEALS
N = BUNA "N"
V = VITON

STYLE
3 = 3 WAY

PORTS
0 = CARTRIDGE ONLY
02BX = G 1/4" BSPP
03BX = G 3/8" BSPP
06TX = SAE – #6
08TX = SAE – #8

"A" – ALUM. HOUSING
"S" – STEEL HOUSING

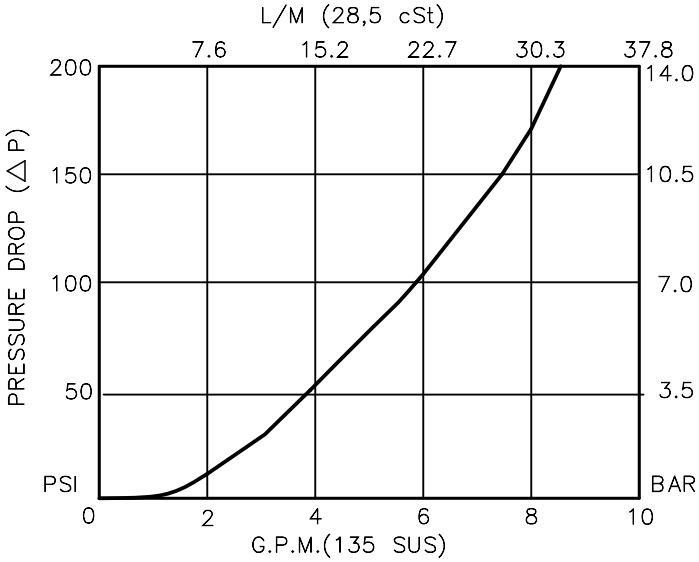

BUCHER hydraulics

SHUTTLE VALVE
TWO–POSITION, THREE–WAY, BALL TYPE.

DESCRIPTION

This unit is a SCREW IN, CARTRIDGE TYPE, THREE PORTED, TWO POSITION, HYDRAULIC SHUTTLE VALVE.

OPERATIONS

This valve senses the higher of the two input pressures port #1 or #3 and routes it to the output port #2.

FEATURES AND BENEFITS

A steel ball and a sharp steel seat assures rugged and reliable performance.
All external carbon steel parts are plated for longer life against the elements.
All cartridge valves are 100% functionally tested.
Industry common cavity.

SPECIFICATIONS

OPERATING PRESSURE: 5,000 PSI [350 Bar]
PROOF PRESSURE: 10,000 PSI [700 Bar]
FLOW: 6.0 GPM [23 l/m] nominal. See performance chart.
INTERNAL LEAKAGE: 5 drops/min maxium at 5,000 PSI.
VALVE HOUSINGS: 2500 PSI [175 Bar] = Aluminum – Anodized.
5000 PSI [350 Bar] = Steel – Unplated.
OPERATING TEMPERATURE: –40° to +250° F. [–40° to +120° C.]
OPERATING MEDIA: All general purpose hydraulic fluids such as MIL–H–5606, SAE–#10, SAE–#20, etc.
INSTALLATION: No restriction.
FILTRATION: 25 microns or better.
SEAL KIT NUMBER: SKN–1031 for buna "n".
SKV–1031 for viton.
WEIGHT: 0.25 lb [.11 kg] cartridge only.
VALVE CAVITY: #C1030, See Page 0–032.0.

info.el@bucherhydraulics.com www.bucherhydraulics.com/commoncavity

© 2015 by Bucher Hydraulics, Inc., 2545 Northwest Parkway, Elgin, Illinois 60124, USA
All rights reserved.
Data is provided for the purpose of product description only, and must not be construed as warranted characteristics in the legal sense. The information does not relieve users from the duty of conducting their own evaluations and tests. Because the products are subject to continual improvement, we reserve the right to amend the product specifications contained in this catalogue.

BUCHER hydraulics
WWW.SUMY.IR

General information
Cavity

Type series: AE

Dimensions and sectional view

Beispiel für die Masseinheit:
Example for the dimensional units:
0.79 = 0.79 mm millimeter

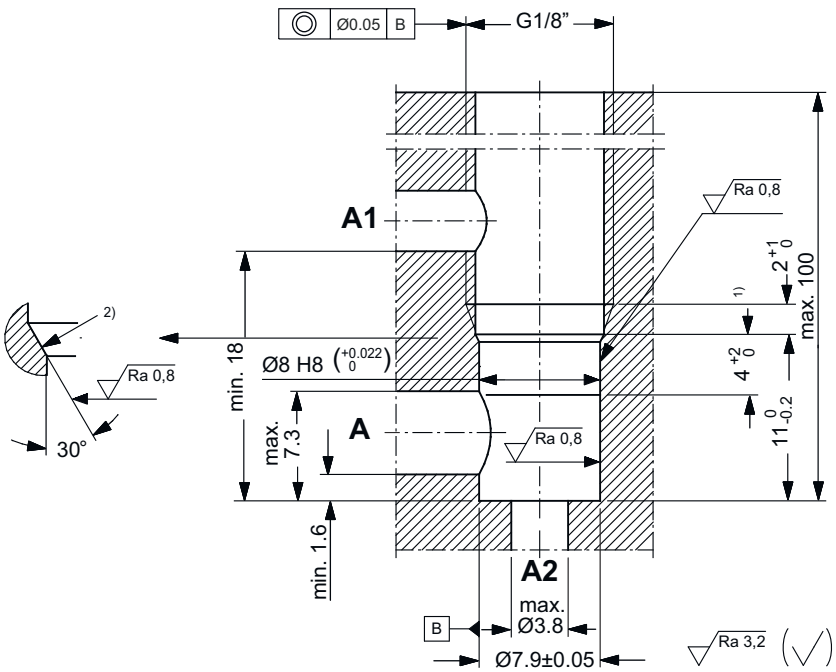

HINWEIS!
NOTE!

1) Passungstiefe
Minimum depth of specified diametral tolerance

2) Der Gewindeauslauf darf die Ringfläche und Ø8 H8 nicht verletzen.
The thread runout must not damage the ring surface or the Ø8 H8.

Installation information

ATTENTION!
You must maintain the specified positional and diametral tolerances. To ensure trouble-free operation of the screw-in cartridges, we strongly recommend that pilot drilling, boring, reaming and cavity thread-cutting are always performed in one setup.

NOTE!
Cavity type to factory standard.

NOTE!
We offer form tool sets for sale or hire. See data sheet 400-P-040011 for further information.

info.ch@bucherhydraulics.com **www.bucherhydraulics.com**

© 2025 by Bucher Hydraulics AG Frutigen, 3714 Frutigen, Switzerland

All rights reserved.
Data is provided for the purpose of product description only, and must not be construed as warranted characteristics in the legal sense. The information does not relieve users from the duty of conducting their own evaluations and tests. Because the products are subject to continual improvement, we reserve the right to amend the product specifications contained in this catalogue.

BUCHER hydraulics
WWW.SUMY.IR

Lock valve
Shuttle valve

Q_{max} = 8 l/min, p_{max} = 250 bar
direct acting, ball type,
Type series: RWA-2...

- Screw-in cartridge valve
- For cavity AE
- Untreated
- With two alternative inlets (the unused one is closed) and one outlet
- For drawing pilot oil from two separate power circuits

Description

The cartridge shuttle valves, series RW..., are size 2, screw-in valves with a G 1/8“ mounting thread. They are designed on the proven ball/seat design. These valves are suitable for installation in control blocks and are used to draw pilot oil from two separate power circuits. The valve can be used as a logic element. For self-assembly, please refer to the section related data sheets.

Symbol

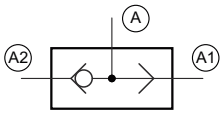

Technical data

General characteristics	Description, value, unit
Product status	Phase-Out
Alternative product	WRVC-G-04-... (170-P-053001)
Function group	Lock valve
Function	Shuttle valve
Design	Screw-in cartridge valve

General characteristics	Description, value, unit
Characteristic	direct acting, ball type
Construction size	NG 2
Thread size	G 1/8”
Mounting attitude	unrestricted
Weight	0.01 kg
Cavity acc. factory standard	For cavity AE
Tightening torque steel	10 Nm
Tightening torque aluminium	10 Nm
Tightening torque tolerance	± 10 %
Minimum ambient temperature	- 25 °C
Maximum ambient temperature	+ 80 °C
Surface protection	Untreated
Sealing material	see ordering code
Seal kit order number	NBR: DS-190-N FKM: DS-190-V

Hydraulic characteristics	Description, value, unit
Maximum operating pressure	250 bar
Maximum flow rate	8 l/min
Flow direction	see symbol
Hydraulic fluid	HL and HLP mineral oil according to DIN 51 524; other fluids on request!
Minimum fluid temperature	- 25 °C
Maximum fluid temperature	+ 80 °C
Viscosity range	10 ... 650 mm^2/s (cSt)
Recommended viscosity range	15 ... 250 mm^2/s (cSt)
Minimum fluid cleanliness (cleanlineless class according to ISO 4406:1999)	class 20/18/15

Performance graphs

measured with oil viscosity 33.0 mm^2/s (cSt)

Δp = f (Q) Pressure drop-flow rate characteristic

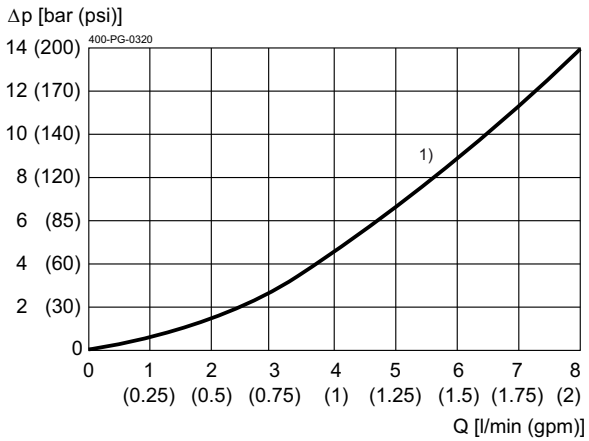

1 = A2 → A, A1 → A

Dimensions and sectional view

Beispiel für die Masseinheit:
Example for the dimensional units:

0.79 = 0.79 mm millimeter
(.031) = 0.031" inch

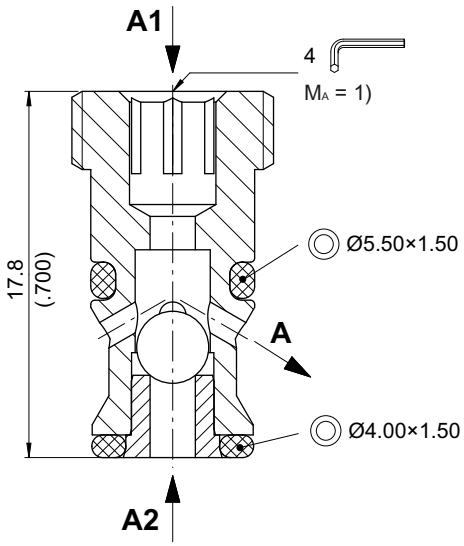

Installation information

NOTE!
1) When fitting the screw-in cartridge valve, use the specified tightening torque. The value can be found in the chapter "Technical data".

NOTE!
The seals are not available individually. The seal kit order number can be found in the chapter "Technical data".

ATTENTION!
Only qualified personnel with mechanical skills may carry out any maintenance work. Generally, the only work that should ever be undertaken is to check, and possibly replace, the seals. When changing seals, oil or grease the new seals thoroughly before fitting them.

Ordering code

Ex. R W A - 2 _ - 1

R	=	check valve
W	=	shuttle function
A ... Q	=	standard model according to valid data sheet *(standard)*
Y ... R	=	special model after consultation
2	=	nominal size 2
(blank)	=	NBR (nitril-butadien-rubber / BUNA) seals *(standard)*
V	=	FKM (fluorocarbon rubber / VITON) seals *(special seals - please consult BUCHER)*
1 ... 9	=	technical design no. (omit when ordering)

Related data sheets

Reference	Description
400-P-040011	Form tools
400-P-040121	Cavity AE

BUCHER
hydraulics
WWW.SUMY.IR

info.ch@bucherhydraulics.com **www.bucherhydraulics.com**

© 2025 by Bucher Hydraulics AG Frutigen, 3714 Frutigen, Switzerland

All rights reserved.
Data is provided for the purpose of product description only, and must not be construed as warranted characteristics in the legal sense. The information does not relieve users from the duty of conducting their own evaluations and tests. Because the products are subject to continual improvement, we reserve the right to amend the product specifications contained in this catalogue.

BUCHER hydraulics
WWW.SUMY.IR

General information
Cavity

Type series: AEZ

Dimensions and sectional view

Beispiel für die Masseinheit:
Example for the dimensional units:
0.79 = 0.79 mm millimeter

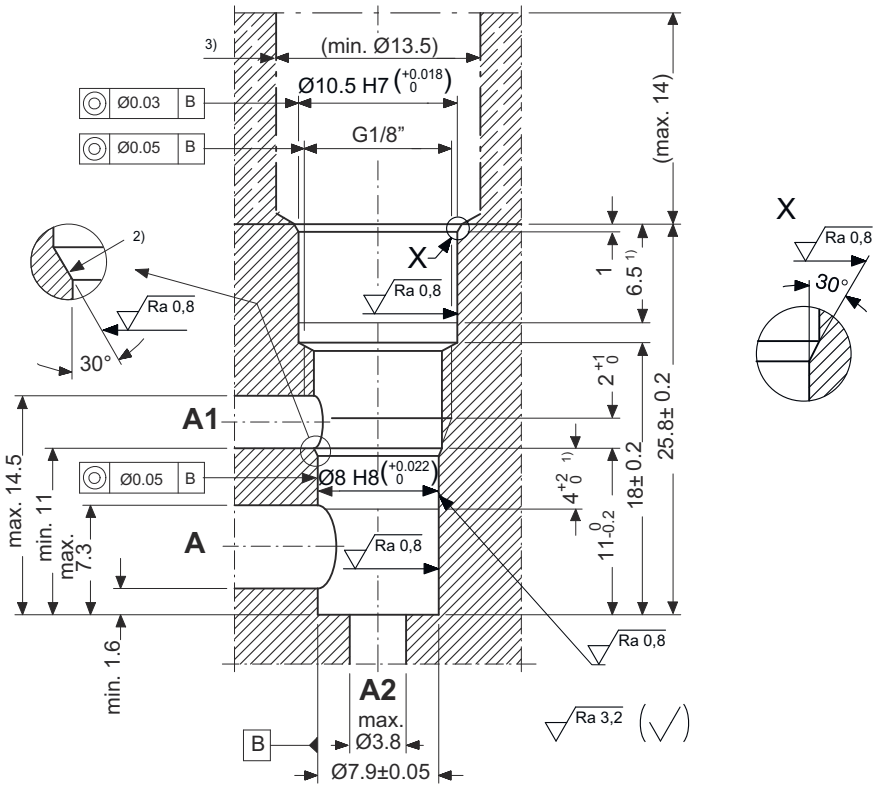

HINWEIS!
NOTE!

1) Passungstiefe
Minimum depth of specified diametral tolerance

2) Der Gewindeauslauf darf die Ringfläche und Ø8 H8 nicht verletzen.
The thread runout must not damage the ring surface or the Ø8 H8.

3) Die Bohrungsform AEZ kann mit dem Stufenwerkzeug bei Bedarf in einer Bohrung von min. Ø13.5 mm, max. 14 mm tief versenkt gebohrt werden.
If required, the AEZ cavity can be machined with the form tool in a recess having a min. Ø of 13.5 mm and a max. depth of 14 mm.

Installation information

ATTENTION!
You must maintain the specified positional and diametral tolerances. To ensure trouble-free operation of the screw-in cartridges, we strongly recommend that pilot drilling, boring, reaming and cavity thread-cutting are always performed in one setup.

NOTE!
Cavity type to factory standard.

NOTE!
We offer form tool sets for sale or hire. See data sheet 400-P-040011 for further information.

info.ch@bucherhydraulics.com **www.bucherhydraulics.com**

© 2025 by Bucher Hydraulics AG Frutigen, 3714 Frutigen, Switzerland

All rights reserved.
Data is provided for the purpose of product description only, and must not be construed as warranted characteristics in the legal sense. The information does not relieve users from the duty of conducting their own evaluations and tests. Because the products are subject to continual improvement, we reserve the right to amend the product specifications contained in this catalogue.

BUCHER hydraulics

WWW.SUMY.IR

Lock valve
Shuttle valve

Q_{max} = 8 l/min, p_{max} = 250 bar
direct acting, ball type,
Type series: RWZ-2...

- Screw-in cartridge valve
- For cavity AEZ
- Untreated
- No sealing plug is needed
- With two alternative inlets (the unused one is closed) and one outlet
- For drawing pilot oil from two separate power circuits

Description

The cartridge shuttle valves, series RWZ..., are size 2, screw-in valves with a G 1/8" mounting thread. They are designed on the proven ball/seat design. These valves are suitable for installation in control blocks and are used to draw pilot oil from two separate power circuits. The valve can be used as a logic element. These cartridge shuttle valves are designed for applications where the designer wishes to avoid the need to plug the bore with a sealing plug. For self-assembly, please refer to the section related data sheets.

Symbol

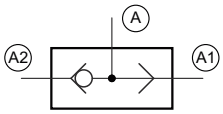

Technical data

General characteristics	Description, value, unit
Product status	Phase-Out
Alternative product	WRVC-G-04-... (170-P-053001)
Function group	Lock valve
Function	Shuttle valve

General characteristics	Description, value, unit
Design	Screw-in cartridge valve
Characteristic	direct acting, ball type
Construction size	NG 2
Thread size	G 1/8”
Mounting attitude	unrestricted
Weight	0.01 kg
Cavity acc. factory standard	For cavity AEZ
Tightening torque steel	10 Nm
Tightening torque aluminium	10 Nm
Tightening torque tolerance	± 10 %
Minimum ambient temperature	- 25 °C
Maximum ambient temperature	+ 80 °C
Surface protection	Untreated
Sealing material	see ordering code
Seal kit order number	NBR: DS-277-N / FKM: DS-277-V

Hydraulic characteristics	Description, value, unit
Maximum operating pressure	250 bar
Maximum flow rate	8 l/min
Flow direction	see symbol
Hydraulic fluid	HL and HLP mineral oil according to DIN 51 524; other fluids on request!
Minimum fluid temperature	- 25 °C
Maximum fluid temperature	+ 80 °C
Viscosity range	10 ... 650 mm^2/s (cSt)
Recommended viscosity range	15 ... 250 mm^2/s (cSt)
Minimum fluid cleanliness (cleanlineless class according to ISO 4406:1999)	class 20/18/15

Phase-Out

BUCHER hydraulics
WWW.SUMY.IR

Performance graphs

measured with oil viscosity 33.0 mm²/s (cSt)

Δp = f (Q) Pressure drop-flow rate characteristic

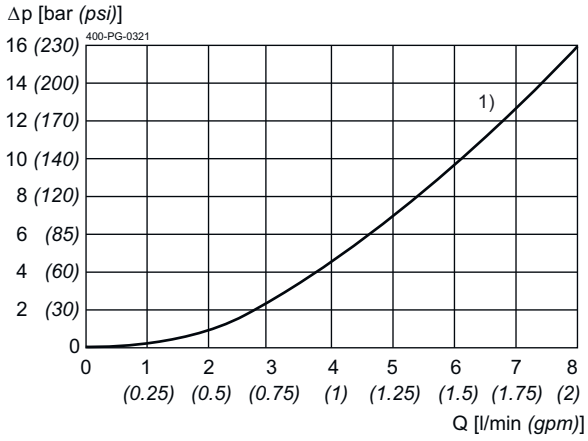

1) = A2 → A, A1 → A

Dimensions and sectional view

Beispiel für die Masseinheit:
Example for the dimensional units:

0.79	= 0.79 mm	millimeter
(.031)	= 0.031"	inch

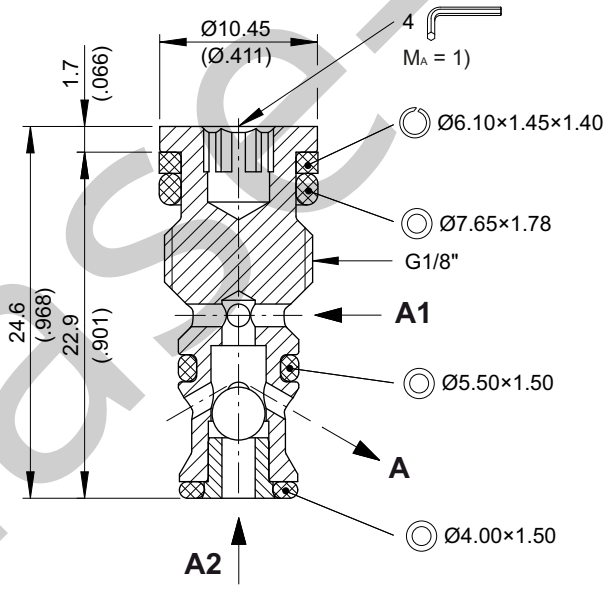

Installation information

NOTE!
1) When fitting the screw-in cartridge valve, use the specified tightening torque. The value can be found in the chapter "Technical data".

NOTE!
The seals are not available individually. The seal kit order number can be found in the chapter "Technical data".

ATTENTION!
Only qualified personnel with mechanical skills may carry out any maintenance work. Generally, the only work that should ever be undertaken is to check, and possibly replace, the seals. When changing seals, oil or grease the new seals thoroughly before fitting them.

Phase-Out

Ordering code

Ex. R W Z - 2 _ - 1

R	=	check valve
W	=	shuttle function
Z	=	standard model (no plug needed)
2	=	nominal size 2
(blank)	=	NBR (nitril-butadien-rubber / BUNA) seals *(standard)*
V	=	FKM (fluorocarbon rubber / VITON) seals *(special seals - please consult BUCHER)*
1 ... 9	=	technical design no. (omit when ordering)

Related data sheets

Reference	Description
400-P-040011	Form tools
400-P-040131	Cavity AEZ

Phase-Out

info.ch@bucherhydraulics.com **www.bucherhydraulics.com**

© 2025 by Bucher Hydraulics AG Frutigen, 3714 Frutigen, Switzerland

All rights reserved.
Data is provided for the purpose of product description only, and must not be construed as warranted characteristics in the legal sense. The information does not relieve users from the duty of conducting their own evaluations and tests. Because the products are subject to continual improvement, we reserve the right to amend the product specifications contained in this catalogue.

Interface ISO Size 03

to ISO 4401-03-02
Form A6 to DIN 24 340
NFPA T3.5.1 MR1 / ANSI B93.7M-D03

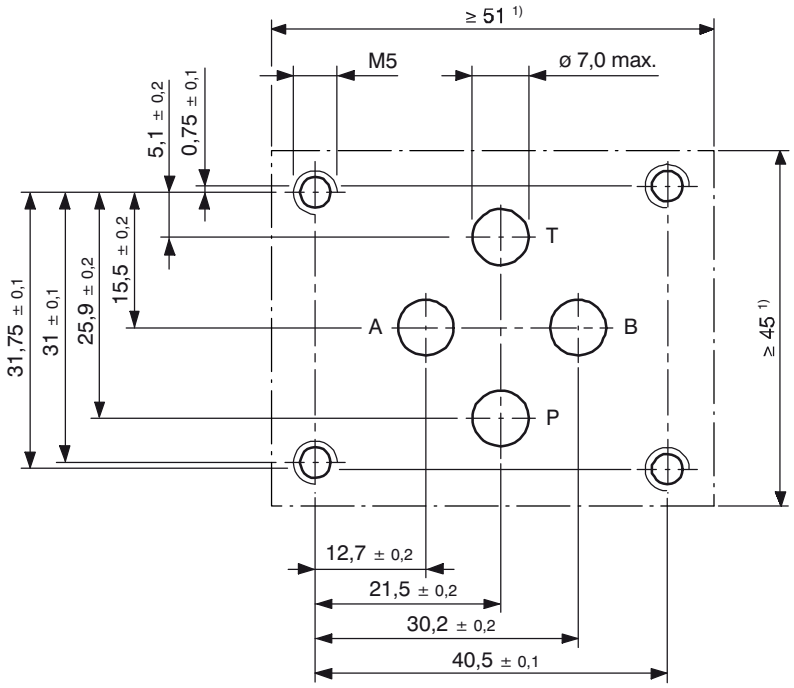

Important:
Interface size 6 **without** locating bore.

A, B = Service ports
P = Pressure port
T = Tank port

1) = Minimum mounting surface

info.ch@bucherhydraulics.com www.bucherhydraulics.com

© 2015 by Bucher Hydraulics AG Frutigen, CH-3714 Frutigen
All rights reserved.
Data is provided for the purpose of product description only, and must not be construed as warranted characteristics in the legal sense. The information does not relieve users from the duty of conducting their own evaluations and tests. Because the products are subject to continual improvement, we reserve the right to amend the product specifications contained in this catalogue.

Classification: 430.Info. … (i-31)

Reference: 400-P-030501-EN-00

BUCHER hydraulics

WWW.SUMY.IR

Lock valve
Check valve

Q_{max} = 60 l/min, p_{max} = 350 bar
direct acting, poppet type
Type series: SRV-_-6-

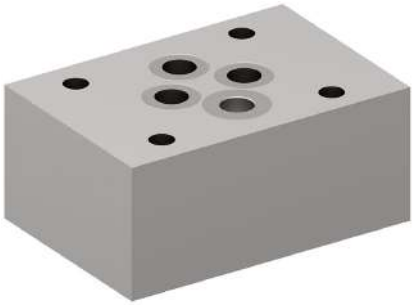

- Stack valve
- Interface to ISO 4401-03-02
- Stack-mounting body with temporary corrosion protection
- Stackable valve elements
- High degree of flexibility due to the possibility of different combinations

Description

The check valves, series SRV..., are size 6, stack-mounting valves with interface to ISO 4401-03-02. They are designed on the poppet/seat principle and are used for the leak-free blocking of actuators. Long service life is achieved by using a special material on the valve seat. There are different versions available. These valves are mainly used in mobile and industrial applications, and provide high flexibility for stackable system solutions. For installation, please refer to the section related data sheets.

Symbol

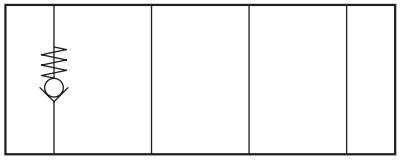

SRV-P-…

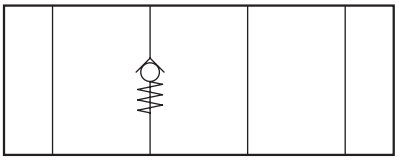

SRV-T-…

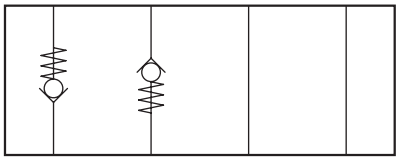

SRV-PT-…

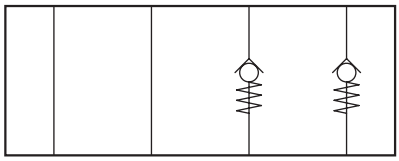

SRV-ABZ-…

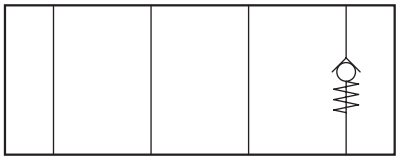

SRV-AZ-…

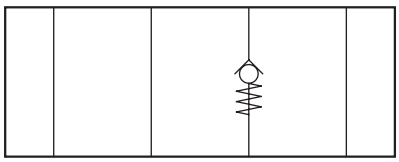

SRV-BZ-…

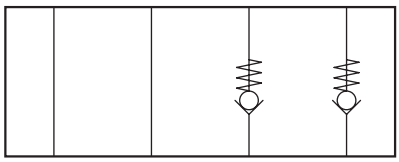

SRV-ABA-…

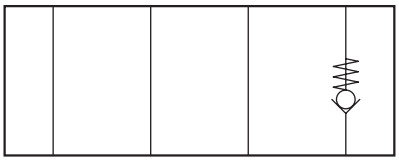

SRV-AA-…

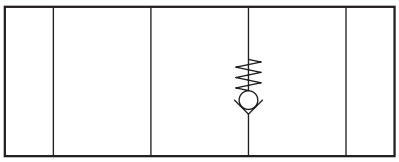

SRV-BA-…

Technical data

General Characteristics	Description, value, unit
Function group	Lock valve
Function	Check valve
Design	Stack valve
Controls	direct acting
Characteristic	poppet type
Construction size	nominal size 6
Mounting attitude	unrestricted
Weight	0.7 kg
Interface according to	ISO 4401-03-02
Minimum ambient temperature	- 30 °C
Maximum ambient temperature	+ 80 °C
Surface protection	Stack-mounting body with temporary corrosion protection
Sealing material	see ordering code
Seal kit order number	NBR: DS-058-N / FKM: DS-058-V

Hydraulic Characteristics	Description, value, unit
Maximum operating pressure	350 bar
Maximum flow rate	60 l/min
Flow direction	see symbol
Hydraulic fluid	HL and HLP mineral oil according to DIN 51 524; other fluids on request!
Minimum fluid temperature	- 30 °C
Maximum fluid temperature	+ 80 °C
Viscosity range	10 ... 650 mm^2/s (cSt)
Recommended viscosity range	15 ... 250 mm^2/s (cSt)
Minimum fluid cleanliness (cleanlineless class according to ISO 4406:1999)	class 20/18/15
Opening pressure	0.5 bar

Performance graphs

measured with oil viscosity 33.0 mm^2/s (cSt)

Δp = f (Q) Pressure drop-flow rate characteristic

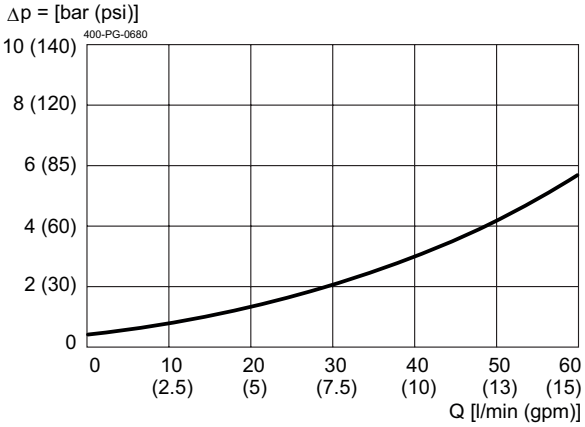

Dimensions and sectional view

Beispiel für die Masseinheit:
Example for the dimensional units:

0.79 = 0.79 mm millimeter
(.031) = 0.031" inch

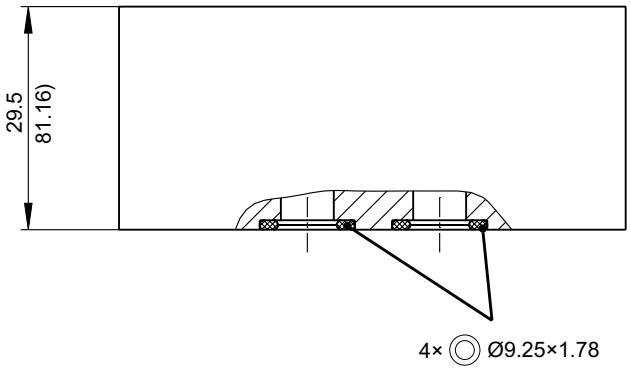

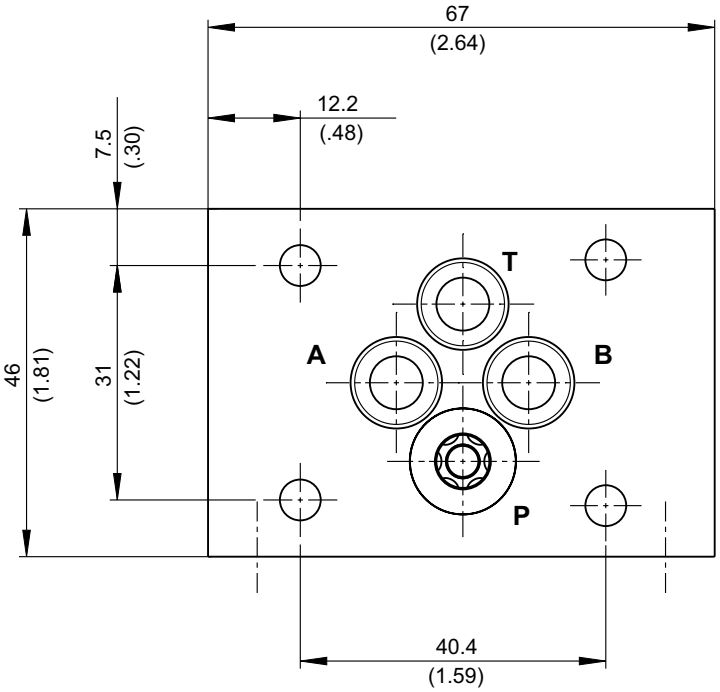

Installation information

ATTENTION!
Only qualified personnel with mechanical skills may carry out any maintenance work. Generally, the only work that should ever be undertaken is to check, and possibly replace, the seals. When changing seals, oil or grease the new seals thoroughly before fitting them.

Ordering code

Ex. S RV - P - 6 - 0,5 - _ - N A 1

S	= stack valve
RV	= check valve
P	= function in P
T	= function in T
AA	= function in A, flow outlet
AZ	= function in A, flow inlet
BA	= function in B, flow outlet
BZ	= function in B, flow inlet
ABA	= function in A and B, flow outlet
ABZ	= function in A and B, flow inlet
PT	= function in P and T (on request)
10	= nominal size 10
0,5	= opening pressure 0.5 bar against check valve
(blank)	= temporary corrosion protection (standard)
BZN	= coating ZnNi (on request)
N	= NBR (nitril-butadien-rubber / BUNA) seals (standard)
V	= FKM (fluorocarbon rubber / VITON) seals (special seals - please contact BUCHER)
A…Q	= standard model - see relevant data sheets
Z…R	= special features - please consult BUCHER
1…9	= design stage (omit when ordering new units)

Related data sheets

Reference	Description
400-P-030501	Interface ISO 03 (Size 6) according to ISO 4401-03-02

info.ch@bucherhydraulics.com
www.bucherhydraulics.com

© 2022 by Bucher Hydraulics AG Frutigen, 3714 Frutigen, Switzerland

All rights reserved.
Data is provided for the purpose of product description only, and must not be construed as warranted characteristics in the legal sense. The information does not relieve users from the duty of conducting their own evaluations and tests. Because the products are subject to continual improvement, we reserve the right to amend the product specifications contained in this catalogue.

WWW.SUMY.IR

Interface ISO Size 05

to ISO 4401-05-04
Form A10 to DIN 24 340
NFPA T3.5.1 MR1 / ANSI B93.7M-D05

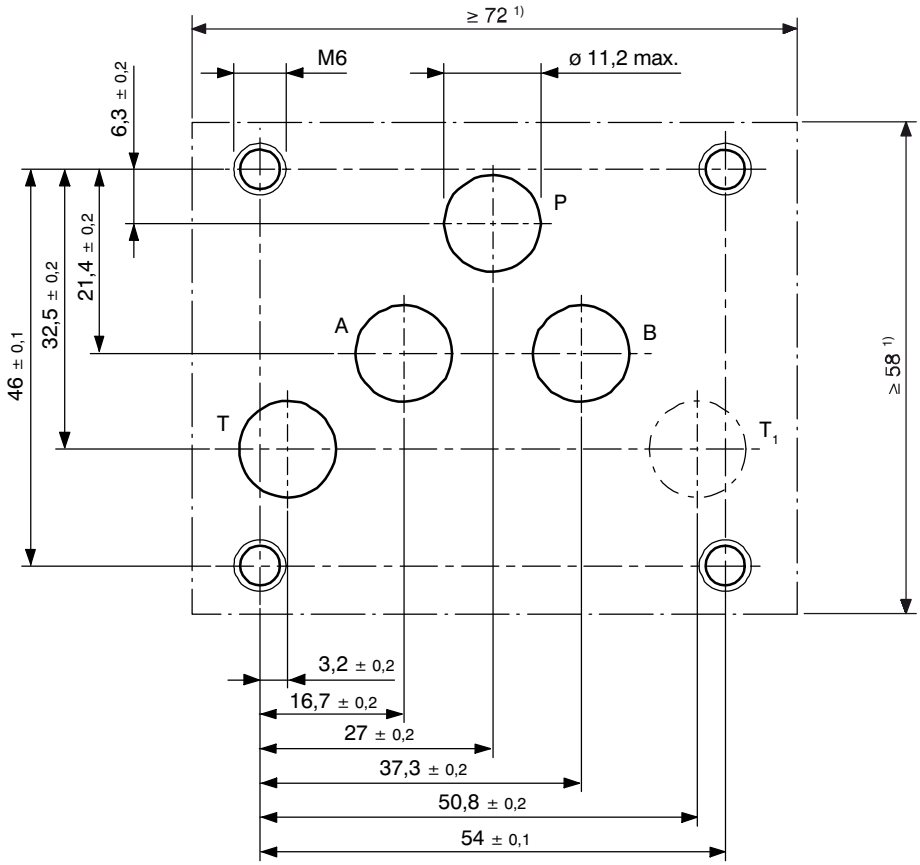

A, B	=	Service ports
P	=	Pressure port
T	=	Tank port
T_1	=	Tank port (optional)

1) = Minimum mounting surface

info.ch@bucherhydraulics.com www.bucherhydraulics.com

© 2015 by Bucher Hydraulics AG Frutigen, CH-3714 Frutigen
All rights reserved.
Data is provided for the purpose of product description only, and must not be construed as warranted characteristics in the legal sense. The information does not relieve users from the duty of conducting their own evaluations and tests. Because the products are subject to continual improvement, we reserve the right to amend the product specifications contained in this catalogue.

Classification: 430.Info. … (i-41)

BUCHER hydraulics

WWW.SUMY.IR

Lock valve
Check valve

Q_{max} = 120 l/min, p_{max} = 350 bar
direct acting, poppet type
Type series: SRV-_-10-

- Stack valve
- Interface to ISO 4401-05-04
- Stack-mounting body with temporary corrosion protection
- Stackable valve elements
- High degree of flexibility due to the possibility of different combinations

Description

The check valves, series SRV..., are size 10, stack-mounting valves with interface to ISO 4401-05-04. They are designed on the poppet/seat principle and are used for the leak-free blocking of actuators. Long service life is achieved by using a special material on the valve seat. There are different versions available. These valves are mainly used in mobile and industrial applications, and provide high flexibility for stackable system solutions. For installation, please refer to the section related data sheets.

Symbol

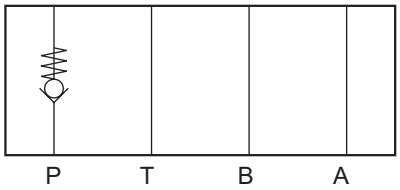

SRV-P-…

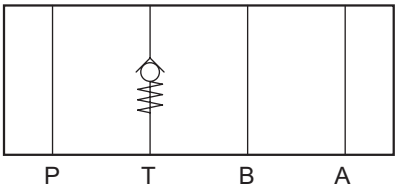

SRV-T-…

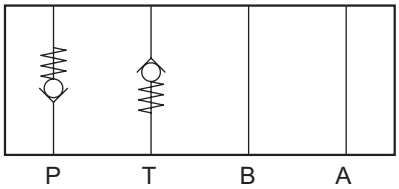

SRV-PT-…

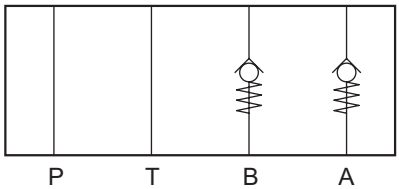

SRV-ABZ-…

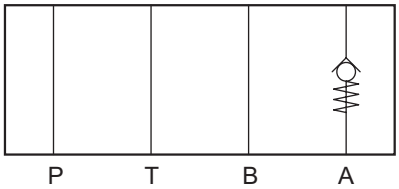

SRV-AZ-…

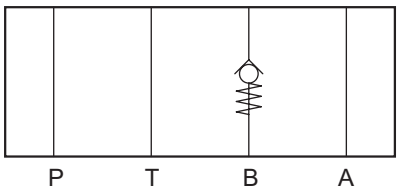

SRV-BZ-…

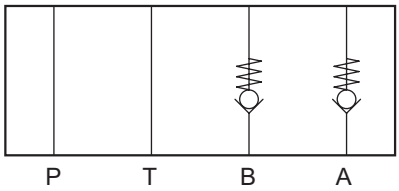

SRV-ABA-…

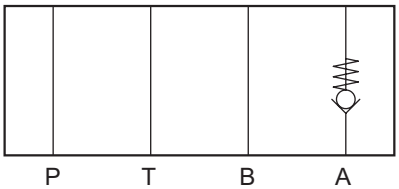

SRV-AA-…

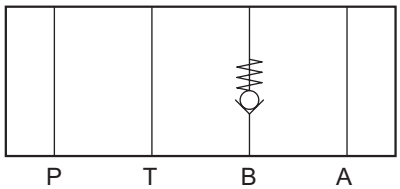

SRV-BA-…

Technical data

General Characteristics	Description, value, unit
Function group	Lock valve
Function	Check valve
Design	Stack valve
Controls	direct acting
Characteristic	poppet type
Construction size	nominal size 10
Mounting attitude	unrestricted
Weight	2.0 kg
Interface according to	ISO 4401-05-04
Minimum ambient temperature	- 30 °C
Maximum ambient temperature	+ 80 °C
Surface protection	Stack-mounting body with temporary corrosion protection
Sealing material	see ordering code
Seal kit order number	NBR: DS-004-N / FKM: DS-004-V

Hydraulic Characteristics	Description, value, unit
Maximum operating pressure	350 bar
Maximum flow rate	120 l/min
Flow direction	see symbol
Hydraulic fluid	HL and HLP mineral oil according to DIN 51 524; other fluids on request!
Minimum fluid temperature	- 30 °C
Maximum fluid temperature	+ 80 °C
Viscosity range	10 ... 650 mm^2/s (cSt)
Recommended viscosity range	15 ... 250 mm^2/s (cSt)
Minimum fluid cleanliness (cleanlineless class according to ISO 4406:1999)	class 20/18/15
Opening pressure	0.5 bar

Performance graphs

measured with oil viscosity 33.0 mm^2/s (cSt)

Δp = f (Q) Pressure drop-flow rate characteristic

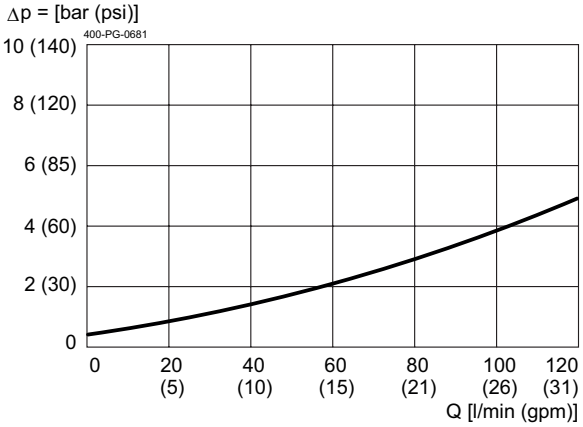

Dimensions and sectional view

Beispiel für die Masseinheit:
Example for the dimensional units:

0.79 = 0.79 mm millimeter
(.031) = 0.031" inch

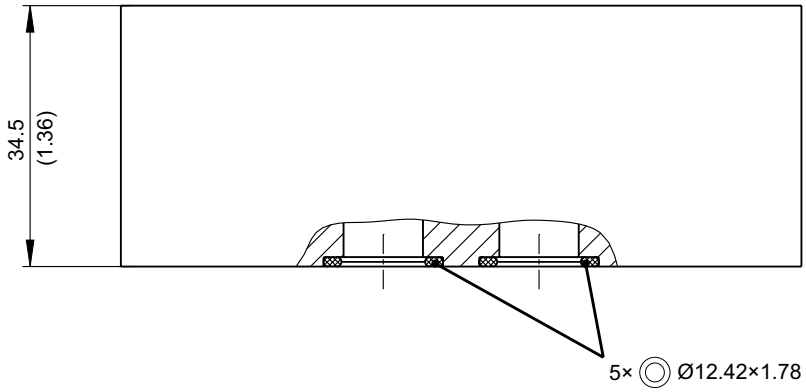

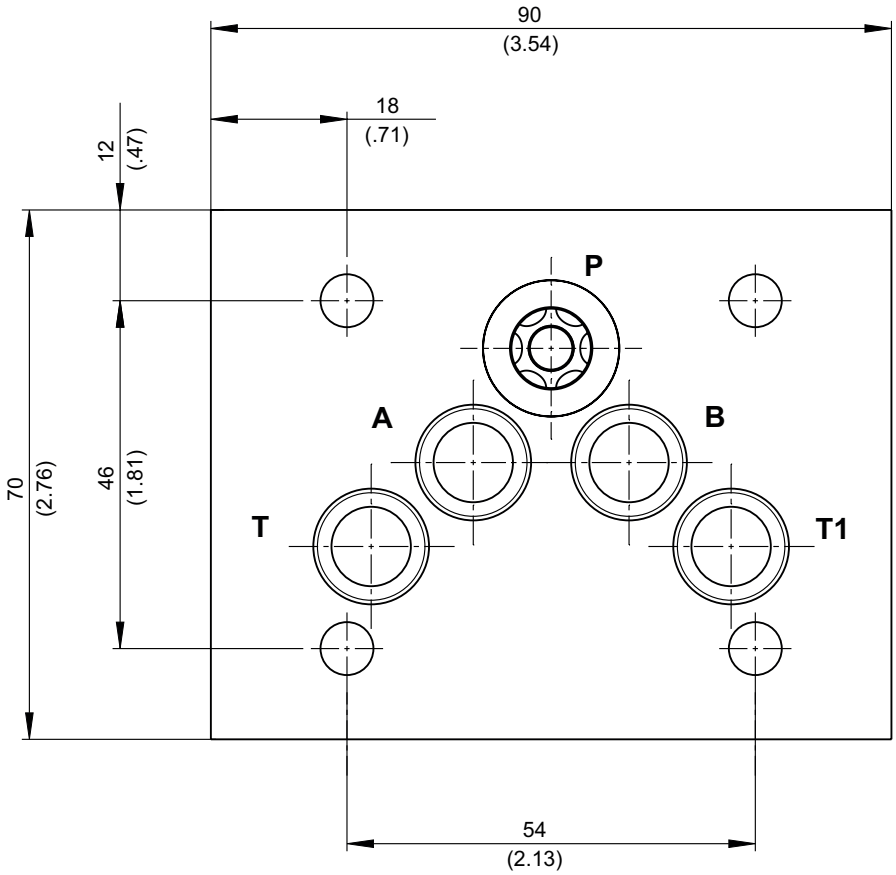

Installation information

ATTENTION!
Only qualified personnel with mechanical skills may carry out any maintenance work. Generally, the only work that should ever be undertaken is to check, and possibly replace, the seals. When changing seals, oil or grease the new seals thoroughly before fitting them.

Ordering code

Ex. S RV - P - 10 - 0,5 - _ - N A 1

S	= stack valve
RV	= check valve
P	= function in P
T	= function in T (only A-side)
AA	= function in A, flow outlet
AZ	= function in A, flow inlet
BA	= function in B, flow outlet
BZ	= function in B, flow inlet
ABA	= function in A and B, flow outlet
ABZ	= function in A and B, flow inlet
PT	= function in P and T (only A-side) (on request)
10	= nominal size 10
0,5	= opening pressure 0.5 bar against check valve
(blank)	= temporary corrosion protection (standard)
BZN	= coating ZnNi (on request)
N	= NBR (nitril-butadien-rubber / BUNA) seals (standard)
V	= FKM (fluorocarbon rubber / VITON) seals (special seals - please contact BUCHER)
A…Q	= standard model - see relevant data sheets
Z…R	= special features - pleace consult BUCHER
1…9	= design stage (omit when ordering new units)

Related data sheets

Reference	Description
400-P-050101	Interface ISO 05 (Size 10) according to ISO 4401-05-04

info.ch@bucherhydraulics.com **www.bucherhydraulics.com**

© 2022 by Bucher Hydraulics AG Frutigen, 3714 Frutigen, Switzerland

All rights reserved.
Data is provided for the purpose of product description only, and must not be construed as warranted characteristics in the legal sense. The information does not relieve users from the duty of conducting their own evaluations and tests. Because the products are subject to continual improvement, we reserve the right to amend the product specifications contained in this catalogue.

BUCHER
hydraulics
WWW.SUMY.IR

Interface ISO Size 02

to ISO 4401-02-01

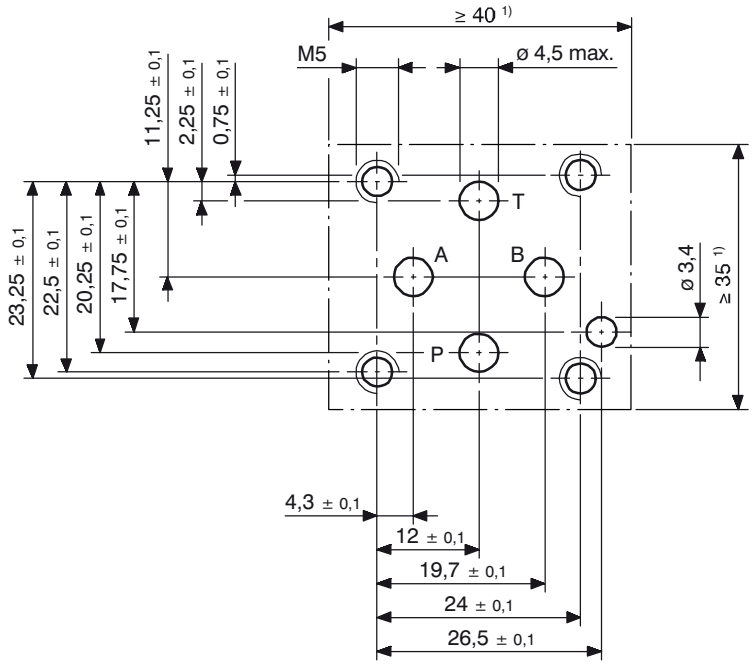

Important
Interface size 4 with locating bore.

A, B = Service ports
P = Pressure port
T = Tank port

1) = Minimum mounting surface

info.ch@bucherhydraulics.com www.bucherhydraulics.com

© 2015 by Bucher Hydraulics AG Frutigen, CH-3714 Frutigen
All rights reserved.
Data is provided for the purpose of product description only, and must not be construed as warranted characteristics in the legal sense. The information does not relieve users from the duty of conducting their own evaluations and tests. Because the products are subject to continual improvement, we reserve the right to amend the product specifications contained in this catalogue.

Classification: 430.Info. … (i-30)

Reference: 400-P-030101-EN-00

Pilot Operated Check Valve, size 2
Stack Mounting
Series SREA ..

with ISO 4401-02-01 interface

4 mm nom.
p max. **250 [bar]**
Q max. **25 [l/min]**

- Check valve with guided poppet
- All moving parts hardened
- 2 cracking pressures available

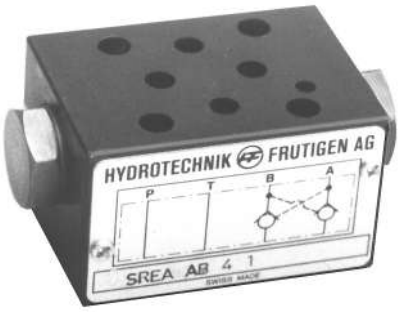

DIMENSIONS

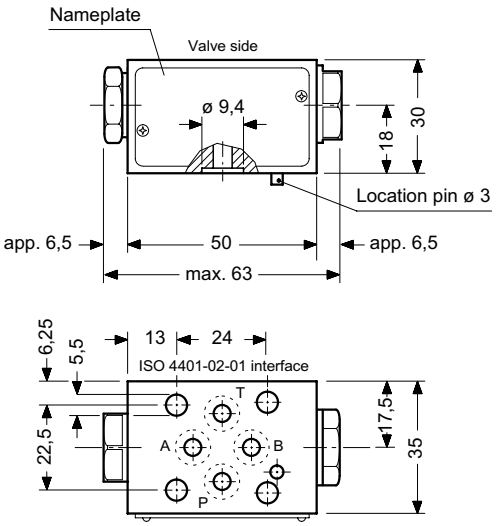

How to recognise
check valve & blanking plug

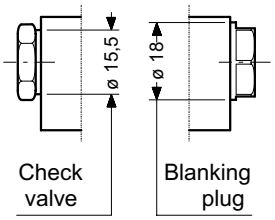

SYMBOLS

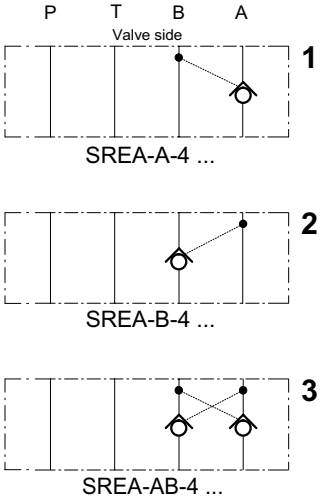

DESCRIPTION

Series SREA-...-4 units are pilot operated check valves which function automatically. The seat-type check valves ensure a near zero-leakage closure of the applicable service line(s).

The check valves block the effects both of external forces on the actuator and of internal leakage in other components.

To ensure that the pilot piston is fully unloaded, the related directional valve should preferably have a mid-position in which the service lines A and B are connected to T (HTF spool type G).

The ø 3 mm location pin on the actuator face of the valve prevents incorrect mounting.

PRINCIPAL CHARACTERISTICS

Type	P.O. check slice valve pilot-to-open
Design	guided poppet / seat
Mounting method	stack mounting
Size	ISO 4401-02-01 interface
Mass	0,37 kg
Mounting attitude	unrestricted
Flow direction	see symbols
Operating pressure	... 250 bar in P, A, B and T ... 160 bar in T if used with WEDA-...-4 directional valve (data sheet W-12.00)

Cracking pressure	1,0 bar **(standard)** 2,5 bar
Pilot area ratio	1 : 3,3
Fluids	hydraulic oils HL and HLP to DIN 51 524 other fluids - contact HTF
Minimum fluid cleanliness	18/14 to ISO 4406 / Cetop RP70H 8 ... 9 to NAS 1638
Fluid temperature range	-20° ... +60° C
Viscosity range	10 ... 300 cSt
Flow rate, Q max.	25 l/min

SUBJECT TO CHANGE WITHOUT NOTICE

S2Z-1587

SCHEMATIC SECTION

showing the relevant ports

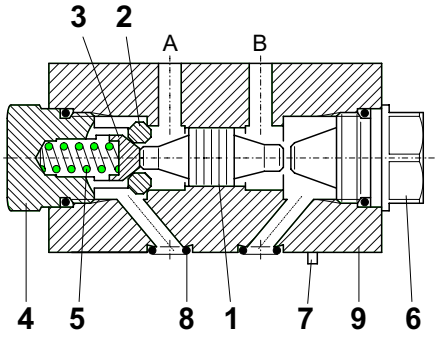

COMPONENTS / SERVICE PARTS

*) = part of seal kit no. DS-210
◢ = available as service part

It.	Qty.		Description		
1	1	1	Spool	ø 10 x 21,4	
2	2	1	Seat ring	ø 12 x 3	
3	2	1	Poppet	ø 7 x 9,9	
4	2	1	Threaded guide housing	ø 18 x 17,5	
5	2	1	Spring 1,0 bar	0,4 × 3,4 × 15,2	iG = 15,5
	2	1	Spring 2,5 bar	0,5 × 3,5 × 15,2	iG = 15,5
6	-	1	Blanking plug	ø 18 x 20	
7 ◢	1	1	Roll pin	ø 3 × 6	DIN 1481
◢	1	1	Seal kit no. DS-210, comprising *):		
8	4*)	4	O-ring no. 010	ø 6,07 × 1,78	N90
9	1	1	Sandwich body Type O-4	35 x 35 x 50	

TO ORDER SERVICE PARTS, STATE:

- complete unit model code from the nameplate, including the design number.
- part description from above list.
- part item number from above list.
- data sheet number, including issue date
- quantity required

SREA-A-4/SREA-B-4

SREA-AB-4

INSTALLATION AND SERVICING

MUST BE CARRIED OUT WITH CARE,
AND BY QUALIFIED PERSONNEL ONLY.

At installation, be sure to mount the valve the correct way up. Do not confuse the flat surface (directional valve side) and the surface with O-ring counterbores (actuator side).

When changing seals, the new seals should be thoroughly oiled or greased before fitting them to the valve.

Do not remove the threaded guide housing (item 4) as this can disturb the function and sealing integrity of the valve.

PERFORMANCE CHARACTERISTICS

(Oil viscosity 33 cSt)

Δp-Q characteristics
with no CV (i.e. past blanking plug)

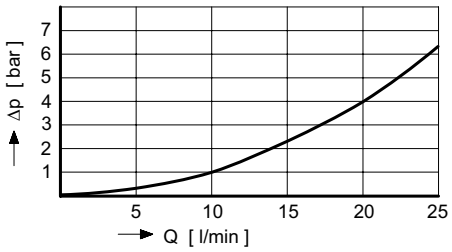

Δp-Q characteristics
through check valve

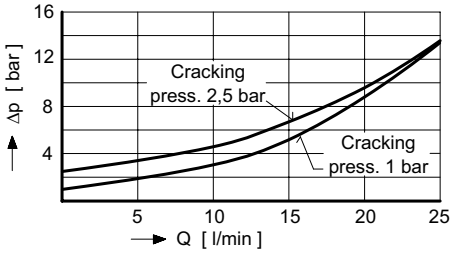

Δp-Q characteristics
with CV piloted open

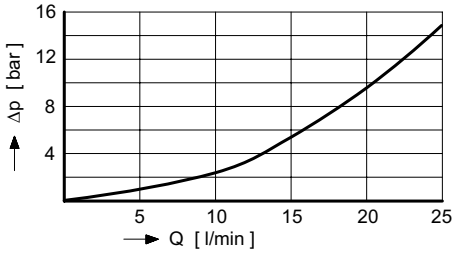

MODEL CODE KEY

Ex. S | RE | A - A - 4 - 10 - _ - 1

S = stacking valve
RE = pilot operated check valve
A ... Q = **standard** model per current data sheet
Z ... R = special features by arrangement
A = function in A
B = function in B
AB = function in A and B
4 = ISO 4401-02-02 interface
10 = cracking pressure 1,0 bar **(standard)**
25 = cracking pressure 2,5 bar
(Blank) = Nitrile seals **(standard)**
V = Viton seals
For special seals, contact HTF
1 ... 9 = design number (omit when ordering)

RELATED DATA SHEETS

i-30 = ISO 4401-02-01 interface

Back page R-15.00
SUBJECT TO CHANGE WITHOUT NOTICE

BUCHER hydraulics

WWW.SUMY.IR

Lock valve
Pilot operated check valve

Q_{max} = 60 l/min, p_{max} = 350 bar
poppet type, hydraulical operation
Type series: SRE-_-6-...

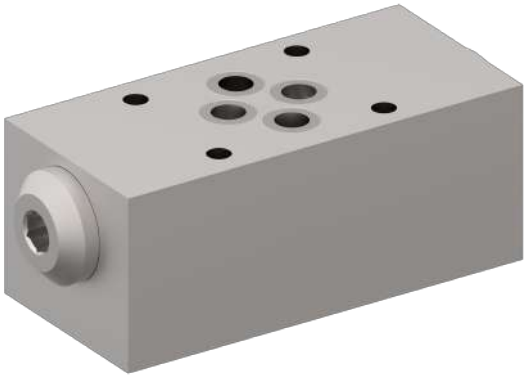

- Stack valve
- External parts of screw-in valves with zinc-nickel plating according to DIN EN ISO 19598
- Stackable valve elements
- High degree of flexibility due to the possibility of different combinations
- Subsequent function changes and extensions possible

Description

The pilot operated check valves, series SRE..., are size 6, stack valves with interface to ISO 4401-03-02. The check function is cancelled by applying pilot pressure from the opposite side. The two-stage design with pre-opening prevents switching shocks when the pressure volume is released. There are different versions available. These valves are mainly used in mobile and industrial applications, and provide high flexibility for stackable system solutions. For installation, please refer to the section related data sheets.

Symbol

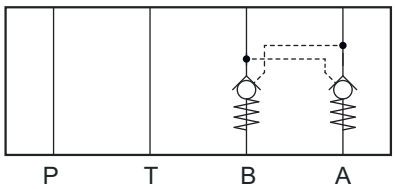

SRE-AB-…

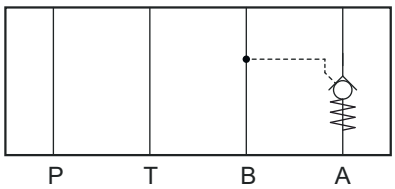

SRE-A-…

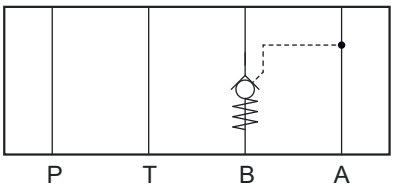

SRE-B-…

Technical data

General characteristics	Description, value, unit
Function group	Lock valve
Function	Pilot operated check valve
Design	Stack valve
Controls	hydraulical operation
Characteristic	poppet type
Construction size	NG 6
Mounting attitude	unrestricted
Weight	1.20 kg
Interface according to	ISO 4401-03-02
Minimum ambient temperature	- 30 °C
Maximum ambient temperature	+ 80 °C
Surface protection	External parts of screw-in valves with zinc-nickel plating according to DIN EN ISO 19598
Surface protection addition	Stack-mounting body with temporary corrosion protection
Sealing material	see ordering code
Seal kit order number	NBR: DS-032-N / FKM: DS-032-V

Hydraulic characteristics	Description, value, unit
Maximum operating pressure	350 bar
Maximum flow rate	60 l/min
Flow direction	see symbol
Hydraulic fluid	HL and HLP mineral oil according to DIN 51 524; other fluids on request!
Minimum fluid temperature	- 30 °C
Maximum fluid temperature	+ 80 °C
Viscosity range	10 ... 650 mm^2/s (cSt)
Recommended viscosity range	15 ... 250 mm^2/s (cSt)
Geometric Differential Area Ratio	1:6
Opening pressure	1.5 / 2.5 / 7.0 bar

BUCHER hydraulics
WWW.SUMY.IR

Performance graphs

measured with oil viscosity 33.0 mm²/s (cSt)

Δp = f (Q) Pressure drop-flow rate characteristic

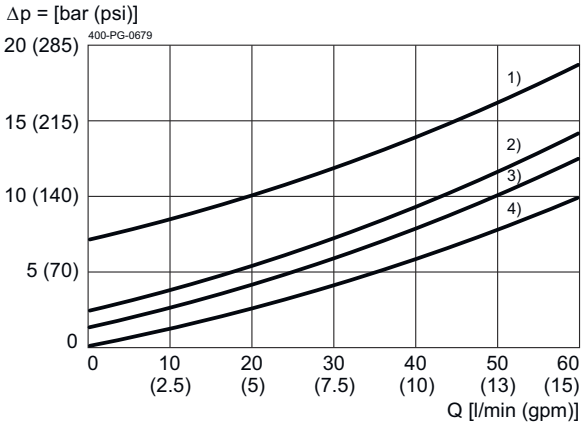

1) Version 7,0 bar
2) Version 2,5 bar
3) Version 1,5 bar

Freier Durchfluss über Rückschlag-ventil/free flow direction

4)

Entsperrter Durchfluss gegen Rückschlagventil/pilot open reverse flow direction

BUCHER
hydraulics
WWW.SUMY.IR

Dimensions and sectional view

Beispiel für die Masseinheit:
Example for the dimensional units:

0.79 = 0.79 mm millimeter
(.031) = 0.031" inch

SRE-A-6-1.5/2.5...

SRE-A-6-7.0-...

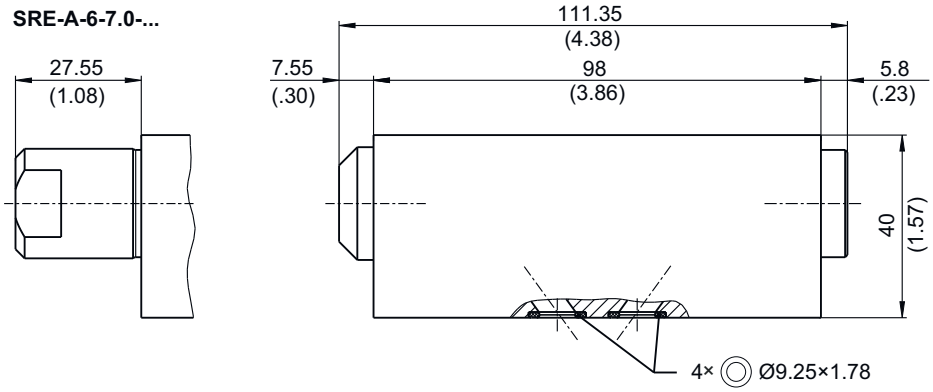

SRE-B-6-1.5/2.5...

SRE-B-6-7.0-...

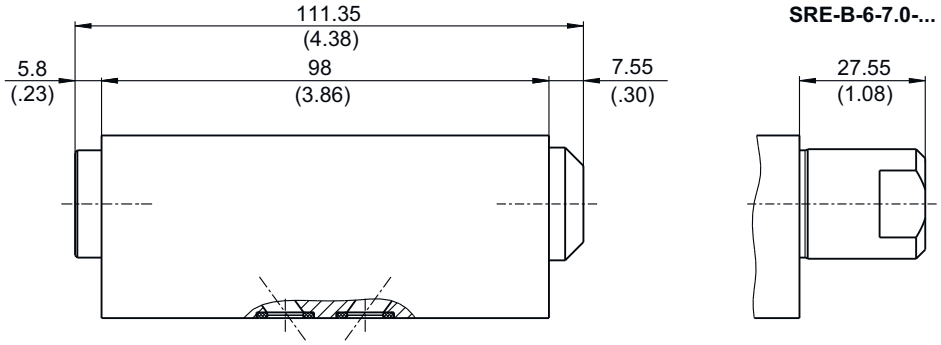

SRE-AB-6-1.5/2.5...

SRE-AB-6-7.0-...

SRE-AB-6-7.0-...

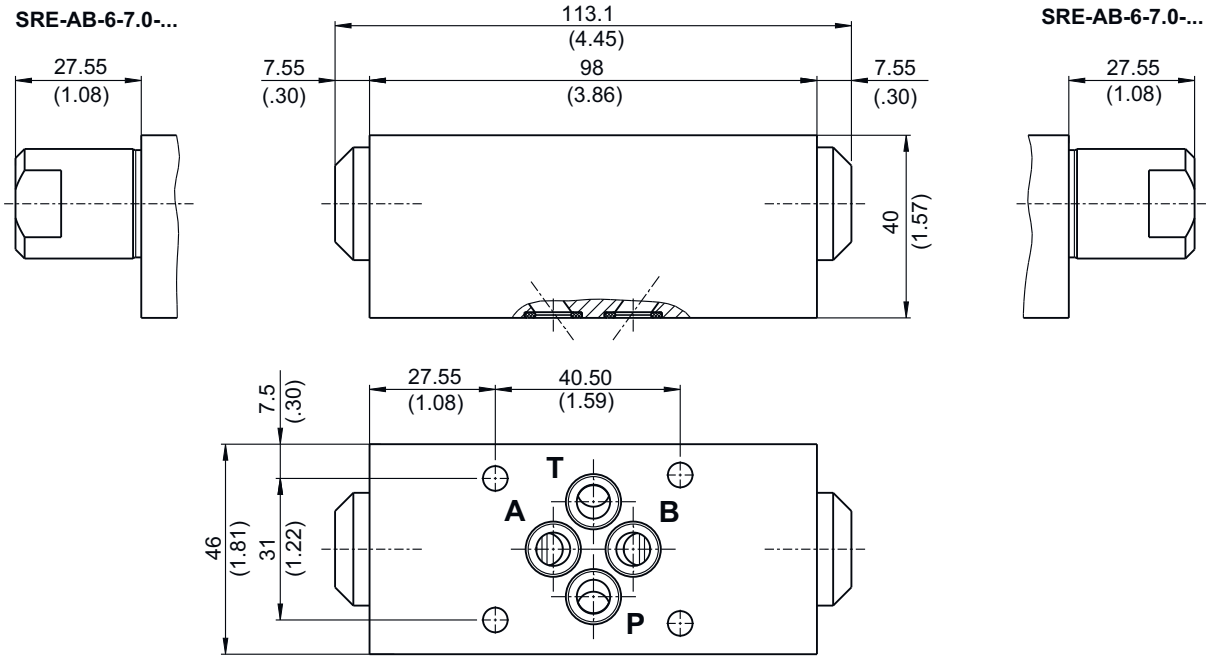

BUCHER hydraulics
WWW.SUMY.IR

Installation information

ATTENTION!
Only qualified personnel with mechanical skills may carry out any maintenance work. Generally, the only work that should ever be undertaken is to check, and possibly replace, the seals. When changing seals, oil or grease the new seals thoroughly before fitting them.

Ordering code

Ex. S RE - AB - 6 - 1.5 - _ - N A 1

S	= stack valve
RE	= pilot operated check valve
A	= check function in A
B	= check function in B
AB	= check function in A and B
6	= nominal size 6
1.5	= opening pressure 1.5 bar (standard)
2.5	= opening pressure 2.5 bar (on request)
7.0	= opening pressure 7.0 bar (on request)
(blank)	= temporary corrosion protection (standard)
BZN	= coating ZnNi (on request)
N	= NBR (nitril-butadien-rubber / BUNA) seals (standard)
V	= FKM (fluorocarbon rubber / VITON) seals (special seals - please contact BUCHER)
A…Q	= standard model - see relevant data sheets
Z…R	= special features - pleace consult BUCHER
1…9	= design stage (omit when ordering new units)

Related data sheets

Reference	Description
400-P-030501	Interface ISO 4401-03... (Size 6)

info.ch@bucherhydraulics.com **www.bucherhydraulics.com**

© 2026 by Bucher Hydraulics AG Frutigen, 3714 Frutigen, Switzerland

All rights reserved.
Data is provided for the purpose of product description only, and must not be construed as warranted characteristics in the legal sense. The information does not relieve users from the duty of conducting their own evaluations and tests. Because the products are subject to continual improvement, we reserve the right to amend the product specifications contained in this catalogue.

BUCHER hydraulics
WWW.SUMY.IR

Lock valve
Pilot operated check valve

Q_{max} = 120 l/min, p_{max} = 350 bar
poppet type, hydraulical operation
Type series: SRE-_-10-...

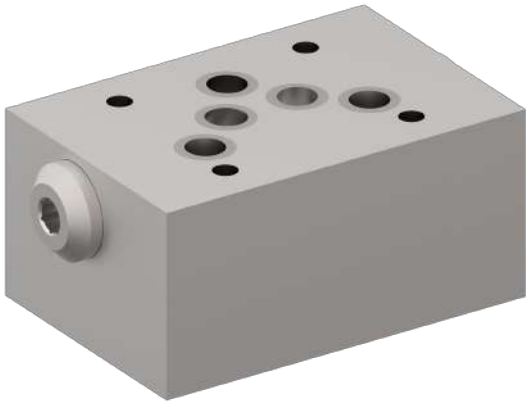

- Stack valve
- External parts of screw-in valves with zinc-nickel plating according to DIN EN ISO 19598
- Stackable valve elements
- High degree of flexibility due to the possibility of different combinations

Description

The pilot operated check valves, series SRE..., are size 10, stack valves with interface to ISO 4401-05-04. The check function is cancelled by applying pilot pressure from the opposite side. The two-stage design with pre-opening prevents switching shocks when the pressure volume is released. There are different versions available. These valves are mainly used in mobile and industrial applications, and provide high flexibility for stackable system solutions. For installation, please refer to the section related data sheets.

Symbol

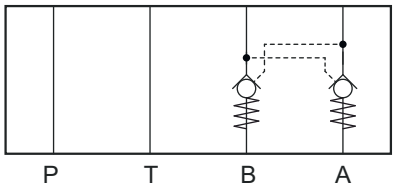

SRE-AB-…

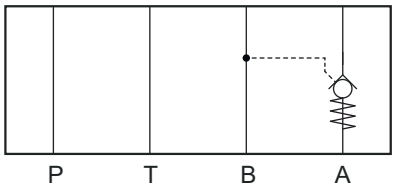

SRE-A-…

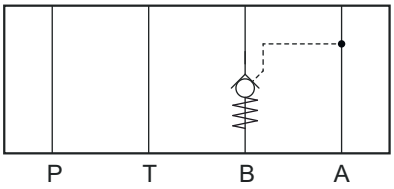

SRE-B-…

Technical data

General characteristics	Description, value, unit
Function group	Lock valve
Function	Pilot operated check valve
Design	Stack valve
Controls	hydraulical operation
Characteristic	poppet type
Construction size	NG 10
Mounting attitude	unrestricted
Weight	3.10 kg
Interface according to	ISO 4401-05-04
Minimum ambient temperature	- 30 °C
Maximum ambient temperature	+ 80 °C
Surface protection	External parts of screw-in valves with zinc-nickel plating according to DIN EN ISO 19598
Surface protection addition	Stack-mounting body with temporary corrosion protection
Sealing material	see ordering code
Seal kit order number	NBR: DS-033-N / FKM: DS-033-V

Hydraulic characteristics	Description, value, unit
Maximum operating pressure	350 bar
Maximum flow rate	120 l/min
Flow direction	see symbol
Hydraulic fluid	HL and HLP mineral oil according to DIN 51 524; other fluids on request!
Minimum fluid temperature	- 30 °C
Maximum fluid temperature	+ 80 °C
Viscosity range	10 ... 650 mm^2/s (cSt)
Recommended viscosity range	15 ... 250 mm^2/s (cSt)
Geometric Differential Area Ratio	1:6
Opening pressure	1.5 / 2.5 / 7.0 bar

BUCHER
hydraulics
WWW.SUMY.IR

Performance graphs

measured with oil viscosity 33.0 mm²/s (cSt)

Δp = f (Q) Pressure drop-flow rate characteristic

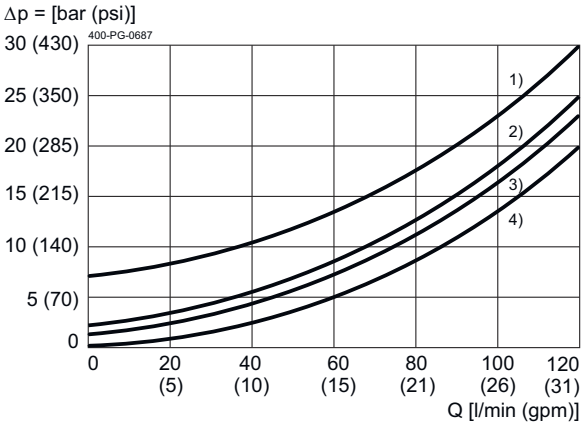

1) Version 7,0 bar
2) Version 2,5 bar
3) Version 1,5 bar

Freier Durchfluss über Rückschlag-ventil/free flow direction

4)

Entsperrter Durchfluss gegen Rück-schlagventil/pilot open reverse flow direction

Dimensions and sectional view

Beispiel für die Masseinheit:
Example for the dimensional units:

0.79 = 0.79 mm millimeter
(.031) = 0.031" inch

SRE-A-10-7.0-...

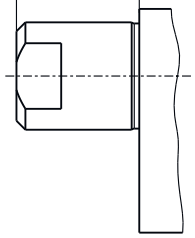

SRE-A-10-1.5/2.5...

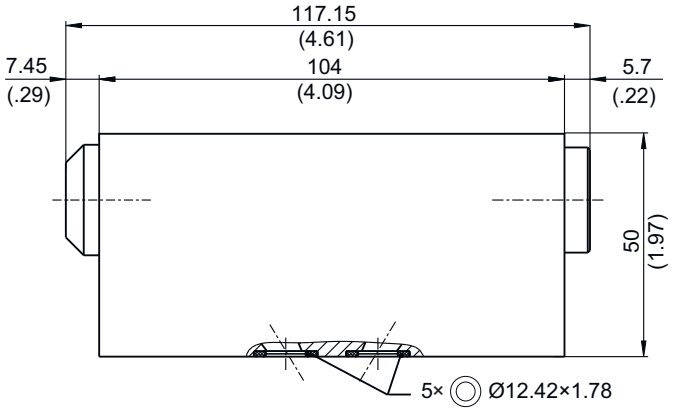

SRE-B-10-1.5/2.5...

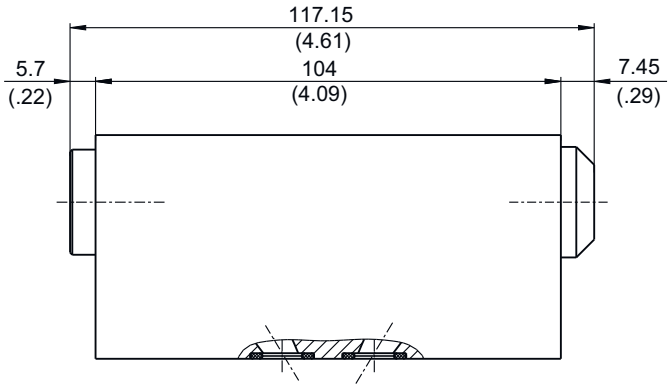

SRE-B-10-7.0-...

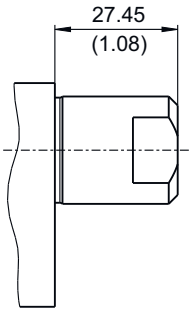

SRE-AB-10-7.0-...

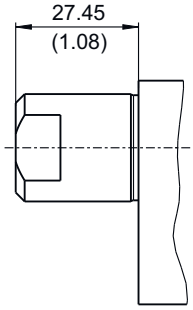

SRE-AB-10-1.5/2.5...

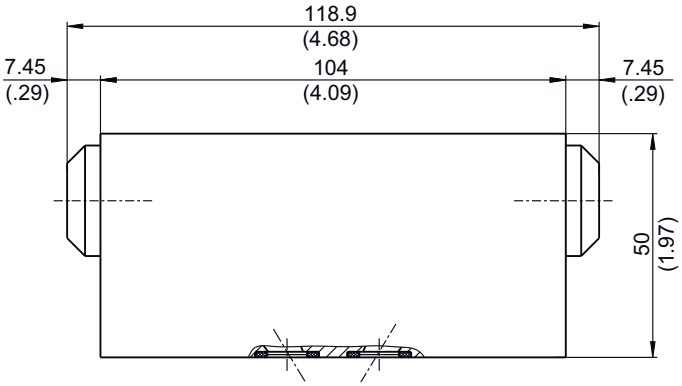

SRE-AB-10-7.0-...

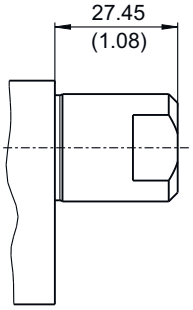

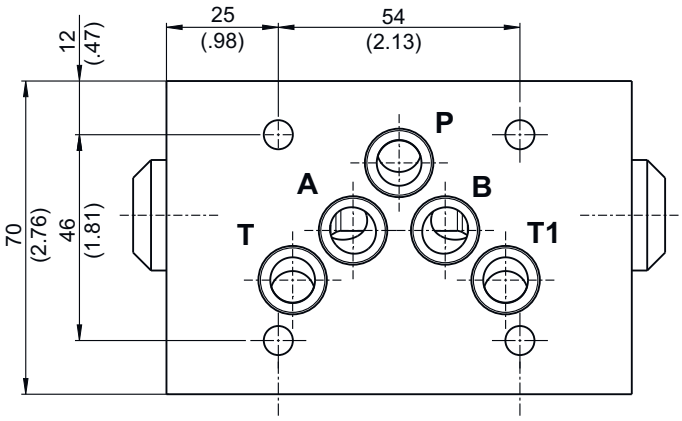

Installation information

ATTENTION!
Only qualified personnel with mechanical skills may carry out any maintenance work. Generally, the only work that should ever be undertaken is to check, and possibly replace, the seals. When changing seals, oil or grease the new seals thoroughly before fitting them.

Ordering code

Ex. S | RE - AB - 10 - 1.5 - _ - N | A | 1

S	= stack valve
RE	= pilot operated check valve
A	= check function in A
B	= check function in B
AB	= check function in A and B
10	= nominal size 10
1.5	= opening pressure 1.5 bar (standard)
2.5	= opening pressure 2.5 bar (on request)
7.0	= opening pressure 7.0 bar (on request)
(blank)	= temporary corrosion protection (standard)
BZN	= coating ZnNi (on request)
N	= NBR (nitril-butadien-rubber / BUNA) seals (standard)
V	= FKM (fluorocarbon rubber / VITON) seals (special seals - please contact BUCHER)
A…Q	= standard model - see relevant data sheets
Z…R	= special features - pleace consult BUCHER
1…9	= design stage (omit when ordering new units)

Related data sheets

Reference	Description
400-P-050101	Interface ISO 4401-05... (Size 10)

info.ch@bucherhydraulics.com **www.bucherhydraulics.com**

© 2026 by Bucher Hydraulics AG Frutigen, 3714 Frutigen, Switzerland

All rights reserved.
Data is provided for the purpose of product description only, and must not be construed as warranted characteristics in the legal sense. The information does not relieve users from the duty of conducting their own evaluations and tests. Because the products are subject to continual improvement, we reserve the right to amend the product specifications contained in this catalogue.

Interface ISO Size 07

to ISO 4401-07-07
Form A16 to DIN 24 340
NFPA T3.5.1 MR1 / ANSI B93.7M-D07

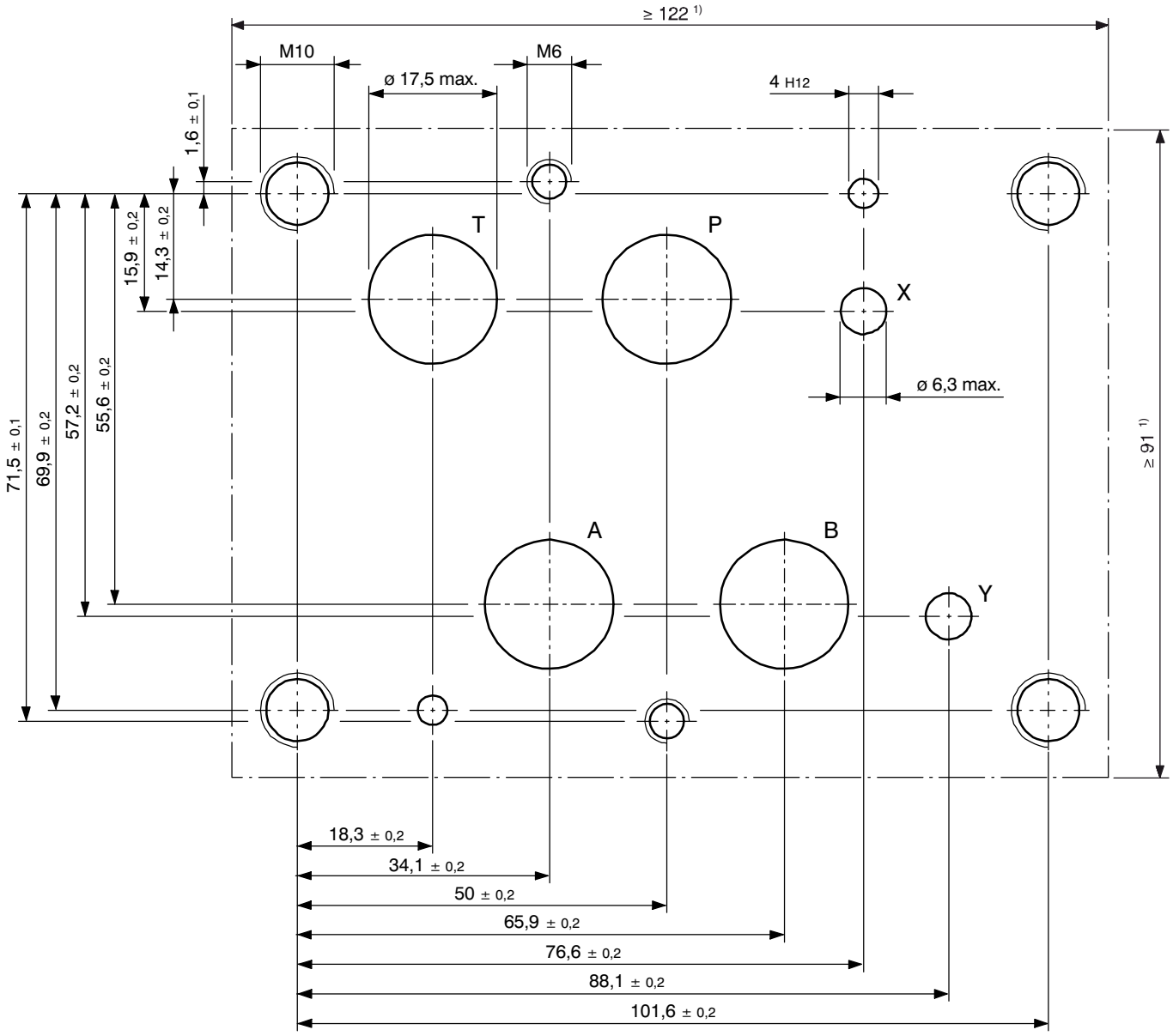

Important:
Interface size 16 **without** pilot port **L**.

Important:
Interface size 16 **with** locating bores.

A, B	=	Service ports
P	=	Pressure port
T	=	Tank port
X, Y	=	Pilot ports
1)	=	Minimum mounting surface

BUCHER
hydraulics
WWW.SUMY.IR

info.ch@bucherhydraulics.com www.bucherhydraulics.com

© 2015 by Bucher Hydraulics AG Frutigen, CH-3714 Frutigen
All rights reserved.
Data is provided for the purpose of product description only, and must not be construed as warranted characteristics in the legal sense. The information does not relieve users from the duty of conducting their own evaluations and tests. Because the products are subject to continual improvement, we reserve the right to amend the product specifications contained in this catalogue.

Classification: 430.Info. … (i-51)

Check Valve, ISO Size 07

Q_{max} = 300 l/min, p_{max} = 350 bar
Sandwich design, pilot operated, seated pilot stage
Series SREA…

- Leak-free shut-off of actuator ports; optionally just one, or both
- Interface to ISO 4401-07-07
- Option of 2 different opening pressures
- For use in stack-valve assemblies

1 Description

These pilot-operated check valves are high performance sandwich valves with a size 07 interface to ISO 4401-07-07. Thanks to the conical-seat design, the valves provide leak-free shut-off of the actuator ports (optionally in the A, B, or A and B lines). Two different models are available, with opening pressures of 2 bar and 5 bar respectively. These sandwich check valves are predominantly used in stack-valve assemblies in industrial applications to maintain the position of loaded actuators (e.g. cylinders or motors) after the pump pressure has been disconnected. All external parts of the cartridge are zinc plated, chromited (free of chrome VI) and are thus suitable for use in the harshest operating environments. The sandwich body is sealed at its manifold side (the connections side) by means of O-rings fitted in counterbores.

2 Symbol

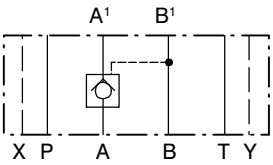

SREA-A-16…

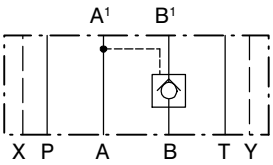

SREA-B-16…

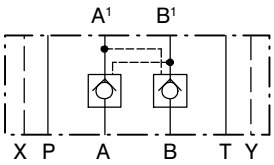

SREA-AB-16…

3 Technical data

General characteristics	Description, value, unit
Designation	check valve
Design	sandwich design, pilot operated, seated pilot stage
Mounting method	4 x ∅ 10.5 holes for M10 cap screws 2 x ∅ 7 holes for M6 cap screws
Size	size 07 interface to ISO 4401-07-07 / DIN 24 340 A16
Weight	7.65 kg
Mounting attitude	unrestricted
Ambient temperature range	-30 °C … +80 °C
Surface corrosion protection	without

Hydraulic characteristics	Description, value, unit
Maximum operating pressure	350 bar
Maximum flow rate	300 l/min
Flow direction	shut-off direction A → A^1 or B → B^1 leak-free, check-valve function A^1 → A or B^1 → B
Opening pressure in free-flow direction	2 or 5 bar (A^1 → A)
Geometric opening ratio	1 : 13
Hydraulic fluid	HL and HLP mineral oil to DIN 51 524; for other fluids, please contact BUCHER
Hydraulic fluid temperature range	-30 °C … +80 °C
Viscosity range	10…650 mm^2/s (cSt), recommended 15...250 mm^2/s (cSt)
Minimum fluid cleanliness Cleanliness class to ISO 4406 : 1999	class 20/18/15

4 Dimensions & sectional view

SREA–**AB**–16...

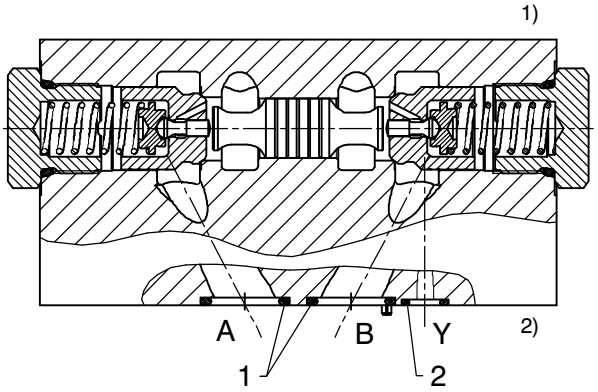

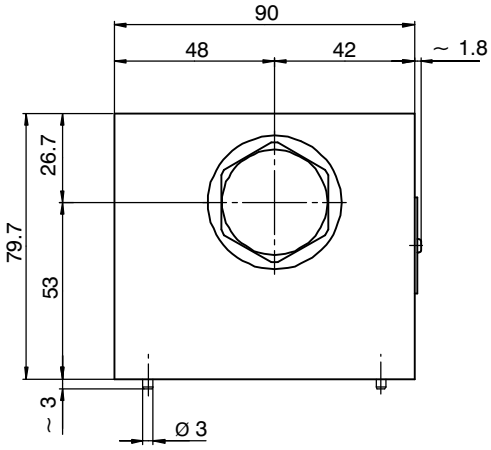

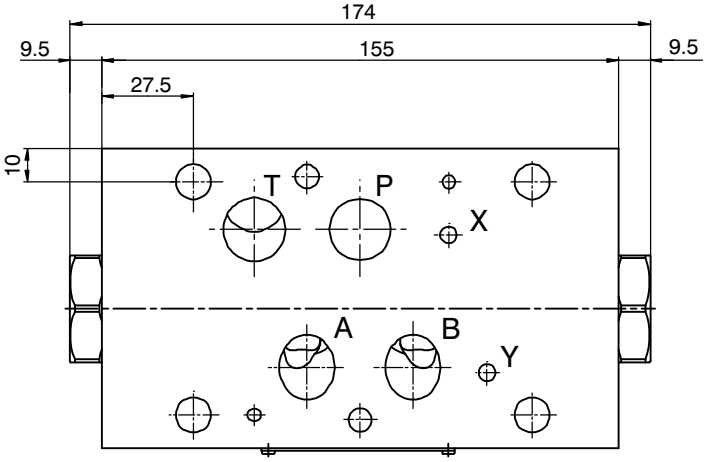

SREA–**A**–16... / SREA–**B**–16...

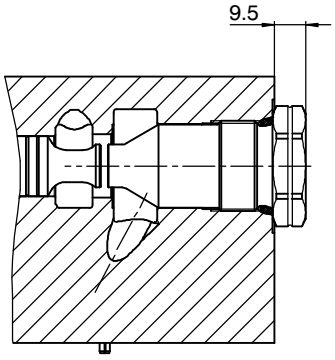

1) Valve side
2) Connections side (manifold side)

IMPORTANT!
In models in which only one actuator line (A or B) is provided with a check function, the other line is equipped with a blanking plug.

5 Performance graphs

measured with oil viscosity 33 mm²/s (cSt)

Δp = f (Q) Pressure drop - Flow rate characteristic

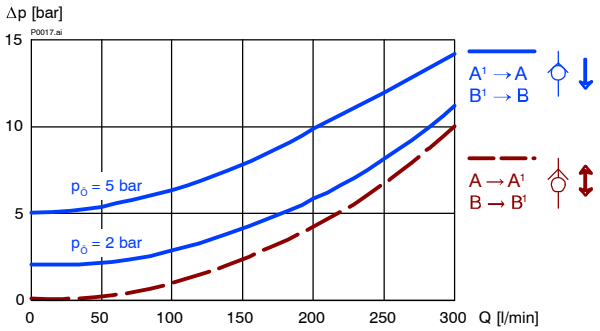

6 Installation information

IMPORTANT!
When installing the valve, make sure that the mating face (the manifold interface) aligns with the valve interface. Do not confuse the sandwich valve's manifold side and directional-valve side. No adjustments are necessary, since the cartridges are set in the factory.

ATTENTION!
Only qualified personnel with mechanical skills may carry out any maintenance work. Generally, the only work that should ever be undertaken is to check, and possibly replace, the seals. When changing seals, oil or grease the new seals thoroughly before fitting them.

Seal kit no. DS-356-N

Item	Qty.	Description
1	4	O-ring no. 118 ∅ 21.89 x 2.62 N90
2	2	O-ring ∅ 10.00 x 2.00 N90
2	2	O-ring no. 110 ∅ 9.19 x 2.62 N90

7 Ordering code

S R E A - AB - 16 - 02 _ - 1

S	=	sandwich design
R	=	check valve
E	=	piloted operated to open
A ... Q	=	standard model - see relevant data sheets
Z ... R	=	special features - please consult BUCHER
A	=	function in A
B	=	function in B
AB	=	function in A and B
16	=	ISO size 07 interface
02	=	opening pressure 2,0 bar (**standard**)
05	=	opening pressure 5,0 bar
(blank)	=	NBR (Nitrile) seals (**standard**)
V	=	FKM (Viton) seals
		(special seals - please contact BUCHER)
1 ... 9	=	design stage (omit when ordering new units)

8 Related data sheets

Reference	(Old no.)	Description
400-P-070101	(i-51)	Size 07 interface to ISO 4401-07-07

info.ch@bucherhydraulics.com www.bucherhydraulics.com

© 2021 by Bucher Hydraulics AG Frutigen, CH-3714 Frutigen
All rights reserved.
Data is provided for the purpose of product description only, and must not be construed as warranted characteristics in the legal sense. The information does not relieve users from the duty of conducting their own evaluations and tests. Because the products are subject to continual improvement, we reserve the right to amend the product specifications contained in this catalogue.

Classification: 430.315.345.330.305.335

BUCHER hydraulics

2–WAY DIRECTIONAL CONTROL VALVE SPOOL TYPE, PILOT OPERATED, CLOSED.

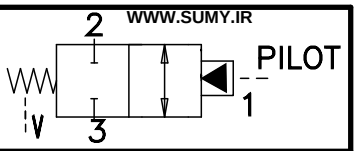

TORQUE:
Steel = 55/60 Ft–Lb. [74/81 Nm]
Aluminum = 35/40 Ft–Lb. [47/54 Nm]

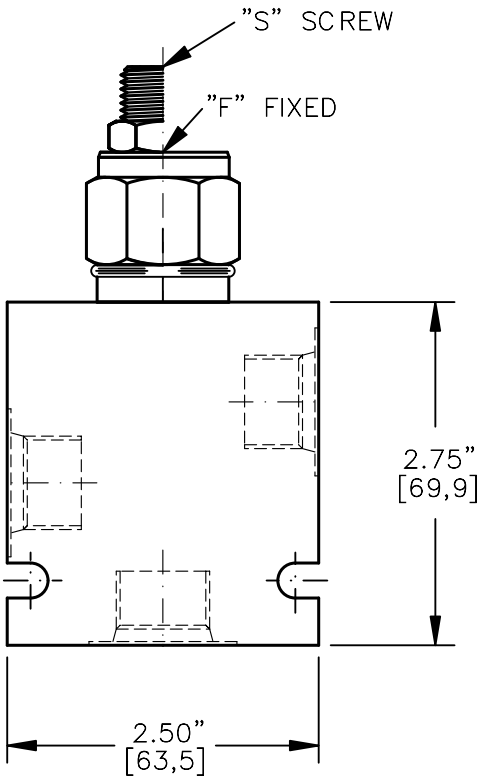

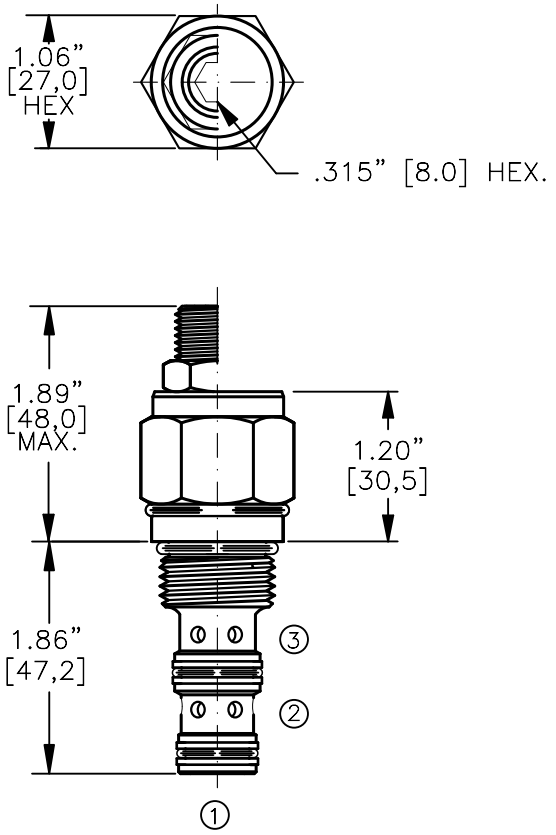

FOR ALUMINUM OR STEEL VALVE HOUSING CONFIGURATIONS SEE PAGE 0–032.1

DCPV–10–X–C–X–X–XXX

BASIC

SIZE
10 = 7/8"–14 UNF

SEALS
N = BUNA "N"
V = VITON

SPOOL
CLOSED

ADJUSTMENT
F = FIXED (FACTORY SET)
S = ADJUSTING SCREW
C = CAPPED
T = TAMPERPROOF
K = HANDKNOB
M = METAL HANDKNOB

FOR ADJUSTMENT CONTROL OPTIONS SEE PAGE 0–050.0

PRESSURE BIAS SPRING
075 = 75 PSI (FIXED)
100 = 100 PSI (FIXED)
150 = 150 PSI (FIXED)
200 = 75–200 PSI (ADJ.)

PORTS
0 = CARTRIDGE ONLY
02BX = G 1/4" BSPP
03BX = G 3/8" BSPP
06TX = SAE – #6
08TX = SAE – #8

"A" – ALUM. HOUSING
"S" – STEEL HOUSING

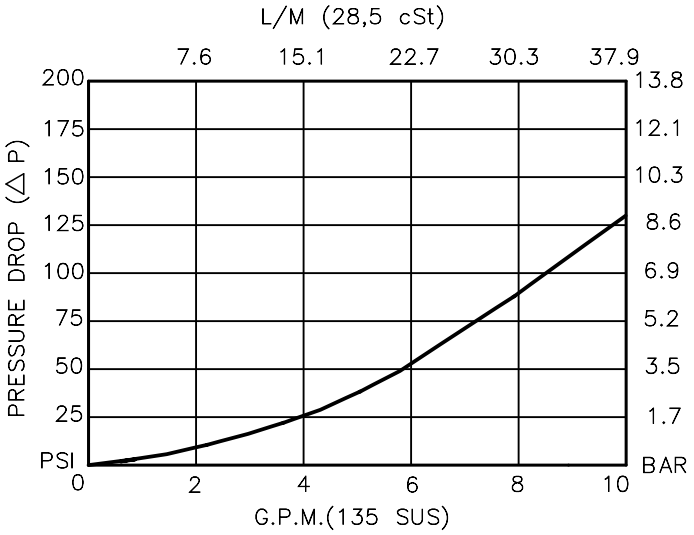

BUCHER hydraulics

WWW.SUMY.IR

2–WAY DIRECTIONAL CONTROL VALVE SPOOL TYPE, PILOT OPERATED, CLOSED.

DESCRIPTION

This unit is a DIRECT ACTING, SCREW IN CARTRIDGE STYLE, SPOOL TYPE, HYDRAULIC 2–WAY DIRECTIONAL CONTROL ELEMENT, requiring remote pilot actuation.

OPERATIONS

This valve blocks flow between port 3 and port 2 with a spring biased spool. The spool will shift when piloted at port 1 with sufficient pressure to overcome the spring bias and allow flow between port 3 and port 2. "V" spring chamber is vented to atmosphere.

FEATURES AND BENEFITS

Leakproof screw adjustment.
This valve has a fixed or an adjustable bias spring.
Adjustment screw can not be backed out of the valve.
Overset protection – spring can not go solid.
Hardened precision fitted spool & cage provides reliable, long life.
A unibody cage construction provides very low hysteresis and reliable operation.
All external carbon steel parts are plated for longer life against the elements.
Valve is available with fixed, screw, tamperproof, capped and handknob adjustments.
All cartridge valves are 100% functionally tested.
Industry common cavity.

SPECIFICATIONS

OPERATING PRESSURE: 5,000 PSI [350 Bar]
PROOF PRESSURE: 10,000 PSI [700 Bar]
FLOW: 10.0 GPM [37,8 L/M] nominal. See performance chart.
INTERNAL LEAKAGE: 5 cu.in./min. [85 cc/m].
DEFINITION OF CRACK: evident at 0.06 GPM [0.25 LPM]
VALVE HOUSINGS: 2500 PSI [175 Bar] = Aluminum – Anodized.
5000 PSI [350 Bar] = Steel – Unplated.
OPERATING TEMPERATURE: –40° to +250° F. [–40° to +120° C.]
OPERATING MEDIA: All general purpose hydraulic fluids such as MIL–H–5606, SAE–#10, SAE–#20, etc.
INSTALLATION: No restriction.
FILTRATION: 25 microns or better.
SEAL KIT NUMBER: SKN–10352 for buna "N".
SKV–10352 for viton.
WEIGHT: 0.46 lb [.21 kg] cartridge only.
VALVE CAVITY: #C1030, See Page 0–032.0.

info.el@bucherhydraulics.com www.bucherhydraulics.com/commoncavity

© 2015 by Bucher Hydraulics, Inc., 2545 Northwest Parkway, Elgin, Illinois 60124, USA
All rights reserved.
Data is provided for the purpose of product description only, and must not be construed as warranted characteristics in the legal sense. The information does not relieve users from the duty of conducting their own evaluations and tests. Because the products are subject to continual improvement, we reserve the right to amend the product specifications contained in this catalogue.

BUCHER hydraulics

2–WAY DIRECTIONAL CONTROL VALVE SPOOL TYPE, PILOT OPERATED, OPEN.

WWW.SUMY.IR

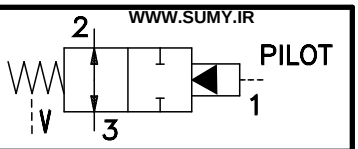

TORQUE:
Steel = 55/60 Ft–Lb. [74/81 Nm]
Aluminum = 35/40 Ft–Lb. [47/54 Nm]

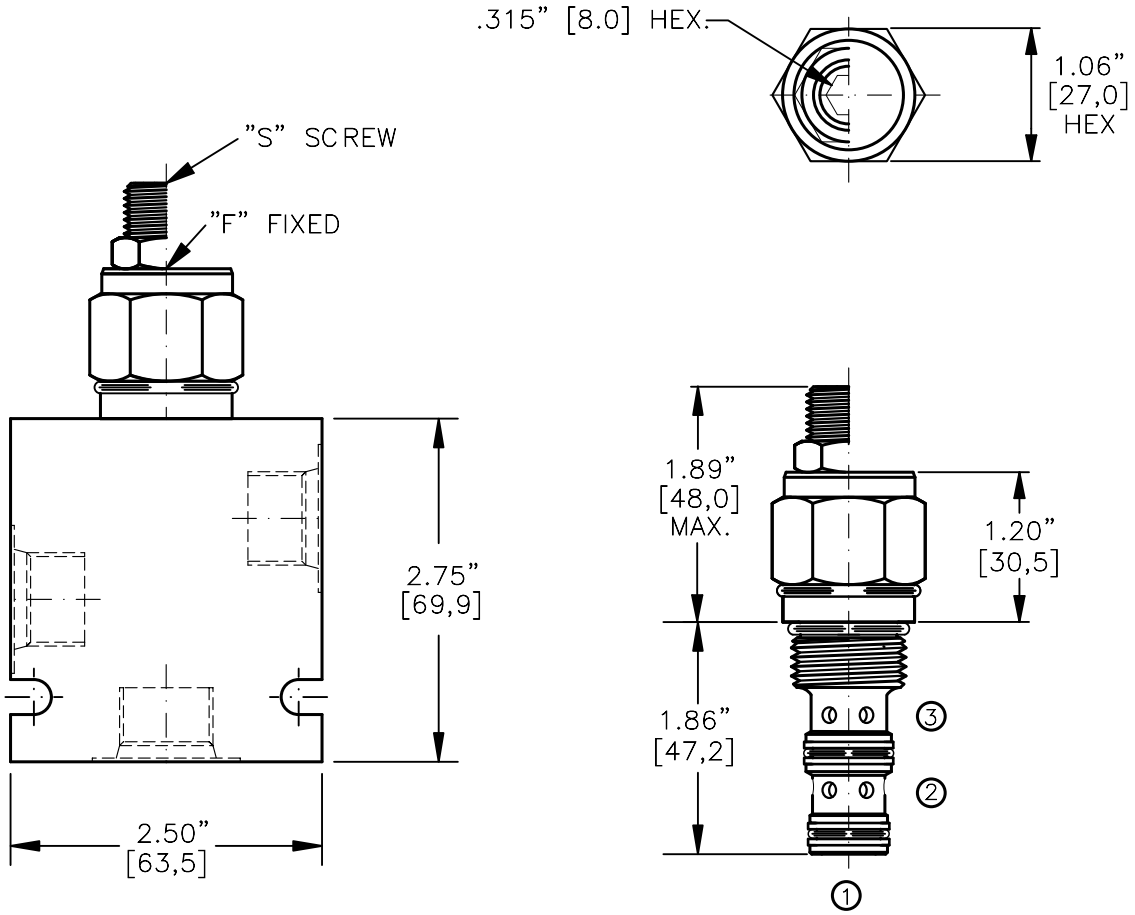

FOR ALUMINUM OR STEEL VALVE HOUSING CONFIGURATIONS SEE PAGE 0–042.1

DCPV–10–X–O–X–X–XXX

BASIC

SIZE
10 = 7/8"–14 UNF

SEALS
N = BUNA "N"
V = VITON

SPOOL

OPEN

ADJUSTMENT
F = FIXED (FACTORY SET)
S = ADJUSTING SCREW
C = CAPPED
T = TAMPERPROOF
K = HANDKNOB
M = METAL HANDKNOB

FOR ADJUSTMENT CONTROL OPTIONS SEE PAGE 0–050.0

PRESSURE BIAS SPRING
075 = 75 PSI (FIXED)
100 = 100 PSI (FIXED)
150 = 150 PSI (FIXED)
200 = 120–200 PSI (ADJ.)

PORTS
0 = CARTRIDGE ONLY
02BX = G 1/4" BSPP
03BX = G 3/8" BSPP
06TX = SAE – #6
08TX = SAE – #8

"A" – ALUM. HOUSING
"S" – STEEL HOUSING

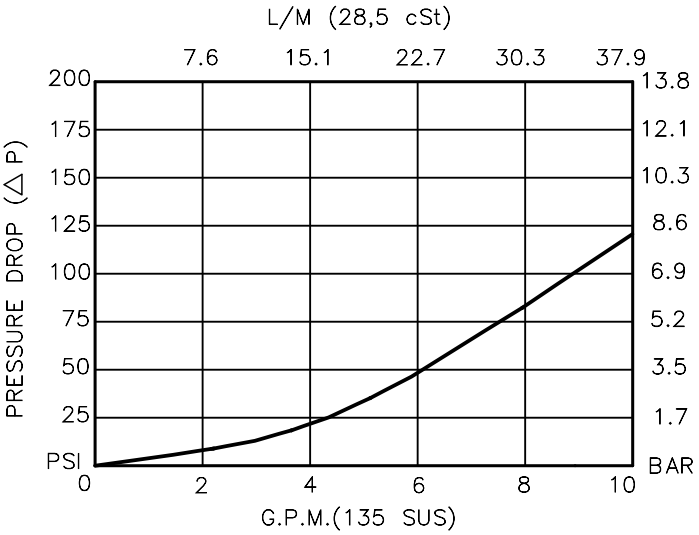

BUCHER hydraulics

WWW.SUMY.IR

2–WAY DIRECTIONAL CONTROL VALVE SPOOL TYPE, PILOT OPERATED, OPEN.

DESCRIPTION

This unit is a DIRECT ACTING, SCREW IN CARTRIDGE STYLE, SPOOL TYPE, HYDRAULIC 2–WAY DIRECTIONAL CONTROL ELEMENT, requiring remote pilot actuation.

OPERATIONS

This valve allows flow between port 3 and port 2 with a spring biased spool. The spool will shift when piloted at port 1 with sufficient pressure to overcome the spring bias and blocks flow between port 3 and port 2. "V" spring chamber is vented to atmosphere.

FEATURES AND BENEFITS

Leakproof screw adjustment.
This valve has a fixed or an adjustable bias spring.
Adjustment screw can not be backed out of the valve.
Overset protection – spring can not go solid.
Hardened precision fitted spool & cage provides reliable, long life.
A unibody cage construction provides very low hysteresis and reliable operation.
All external carbon steel parts are plated for longer life against the elements.
Valve is available with fixed, screw, tamperproof, capped and handknob adjustments.
All cartridge valves are 100% functionally tested.
Industry common cavity.

SPECIFICATIONS

OPERATING PRESSURE: 5,000 PSI [350 Bar]
PROOF PRESSURE: 10,000 PSI [700 Bar]
FLOW: 10.0 GPM [37,8 L/M] nominal. See performance chart.
INTERNAL LEAKAGE: 5 cu.in./min. [85 cc/m].
DEFINITION OF CRACK: evident at 0.06 GPM [0.25 LPM]
VALVE HOUSINGS: 2500 PSI [175 Bar] = Aluminum – Anodized.
5000 PSI [350 Bar] = Steel – Unplated.
OPERATING TEMPERATURE: –40° to +250° F. [–40° to +120° C.]
OPERATING MEDIA: All general purpose hydraulic fluids such as MIL–H–5606, SAE–#10, SAE–#20, etc.
INSTALLATION: No restriction.
FILTRATION: 25 microns or better.
SEAL KIT NUMBER: SKN–10352 for buna "N".
SKV–10352 for viton.
WEIGHT: 0.46 lb [.21 kg] cartridge only.
VALVE CAVITY: #C1030, See Page 0–032.0.

info.el@bucherhydraulics.com www.bucherhydraulics.com/commoncavity

© 2015 by Bucher Hydraulics, Inc., 2545 Northwest Parkway, Elgin, Illinois 60124, USA
All rights reserved.
Data is provided for the purpose of product description only, and must not be construed as warranted characteristics in the legal sense. The information does not relieve users from the duty of conducting their own evaluations and tests. Because the products are subject to continual improvement, we reserve the right to amend the product specifications contained in this catalogue.

BUCHER
hydraulics
WWW.SUMY.IR

Directional valve 3-way/2-position

Q_{max} = 46 l/min, p_{max} = 350 bar
direct acting, spool type, hydraulical operation
Type series: DCPS-10-_-A-...

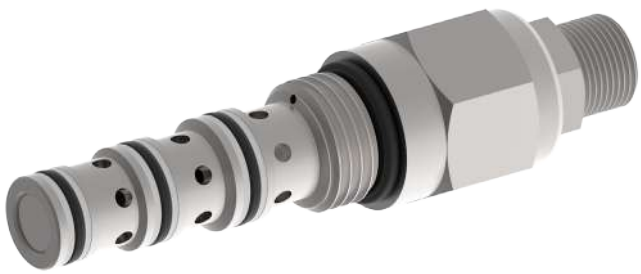

- Screw-in cartridge valve
- For cavity C1040
- All external parts zinc plated, chromited (CrVI-free)
- Installation in threaded port body type B1040
- Hardened precision fitted spool and sleeve provides reliable, long life
- Open center transition
- This valve has a fixed or an adjustable bias spring
- A unibody cage construction provides very low hysteresis, dependable and reliable operation
- Adjustment screw can not be backed out of the valve

Description

This unit is a direct acting, screw-in cartridge style, spool type, hydraulic 3-way directional control element, requiring remote pilot actuation. This valve allows flow from port 3 to port 2 with a spring biased spool. Port 4 is blocked. The spool will shift when piloted at port 1 with sufficient pressure to overcome the spring bias and allow flow from port 3 to port 4. Spring is vented to port 4. This valve shifts in an open center position.

Symbol

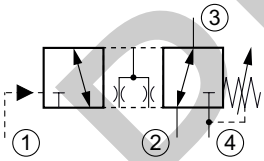

Phase-Out

WWW.SUMY.IR

Technical data

General Characteristics	Description, value, unit
Function group	Directional valve
Function	3-way/2-position
Design	Screw-in cartridge valve
Controls	hydraulical operation
Characteristic	direct acting, spool type
Transition/central position of spool/piston	zero overlap or underlap (open)
Construction size	SAE 10 / nominal size 8
Thread size	7/8-14 UNF-2A
Mounting attitude	unrestricted
Weight	0.21 kg
Cavity acc. factory standard	For cavity C1040
Tightening torque steel	77.5 Nm
Tightening torque aluminium	50.5 Nm
Tightening torque tolerance	± 5 %
Minimum ambient temperature	- 40 °C
Maximum ambient temperature	+ 120 °C
Surface protection	All external parts zinc plated, chromited (CrVI-free)
Available seal types	several seal types available, see ordering code
Seal kit order number	NBR: SKN-1042 / FKM: SKV-1042

Hydraulic Characteristics	Description, value, unit
Maximum operating pressure	350 bar
Maximum flow rate	46 l/min
Flow direction	see symbol
Hydraulic fluid	All general purpose hydraulic fluids such as MIL-H-5606, SAE-#10, SAE-#20, etc.
Minimum fluid temperature	- 25 °C
Maximum fluid temperature	+ 80 °C
Viscosity range	10 ... 500 mm^2/s (cSt)
Recommended viscosity range	20 ... 130 mm^2/s (cSt)
Minimum fluid cleanliness (cleanlineless class according to ISO 4406:1999)	class 18/16/13
Minimum set pressure	5.3 bar
Maximum set pressure	14 bar
Internal leakage flow rate	82 cc/min at 350 bar
Pilot operating media	hydraulic fluid

Phase-Out

Performance graphs

measured with oil viscosity 28.5 mm²/s (cSt)

Δp = f (Q) Pressure drop-flow rate characteristic

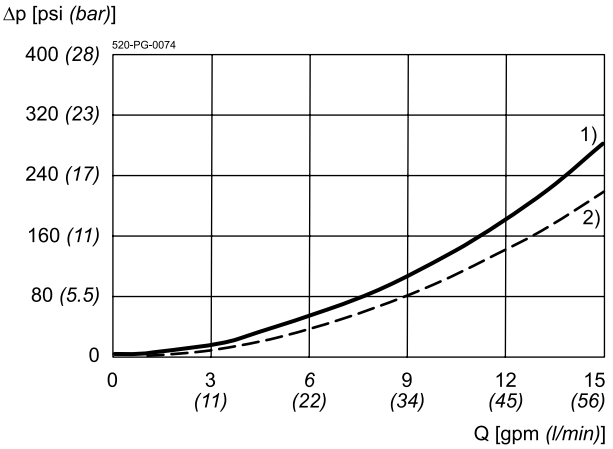

1) = 3 → 2
2) = 3 → 4

Phase-Out

Dimensions and sectional view

Beispiel für die Masseinheit:
Example for the dimensional units:

.031	= 0.031"	inch
(0.79)	= 0.79 mm	millimeter

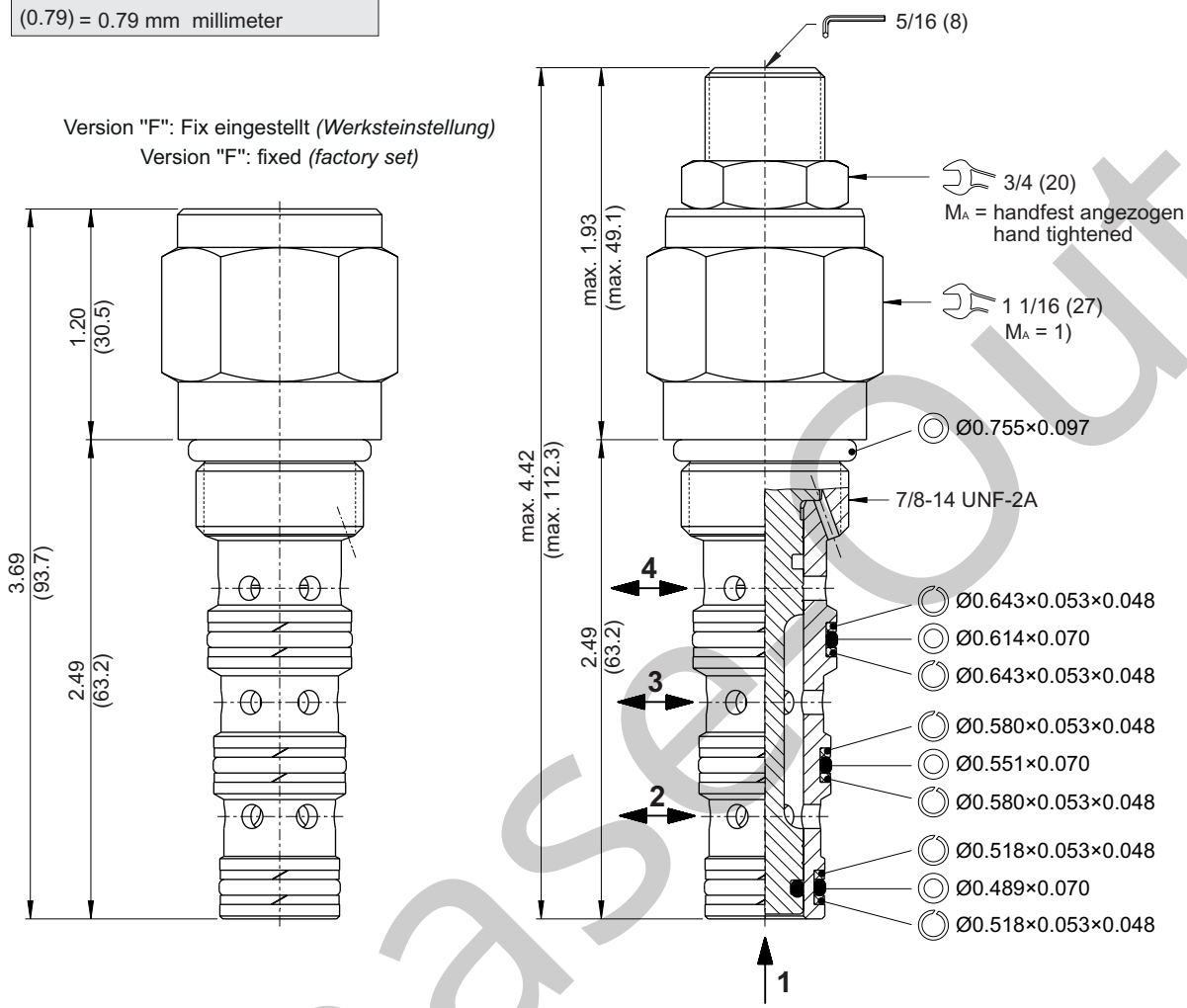

Installation information

ATTENTION!
Only qualified personnel with mechanical skills may carry out any maintenance work. Generally, the only work that should ever be undertaken is to check, and possibly replace, the seals. When changing seals, oil or grease the new seals thoroughly before fitting them.

NOTE!
The seals are not available individually. The seal kit order number can be found in the chapter "Technical data".

NOTE!
1) When fitting the screw-in cartridge valve, use the specified tightening torque. The value can be found in the chapter "Technical data".

Phase Out

Ordering code

e.g. DCPS - 10 - N - A - F - 0 - 075

DCPS = directional control valve, direct acting, cartridge design

10 = nominal size SAE 10 / NG 08

N = NBR (nitril-butadien-rubber / BUNA) seals *(standard)*
V = FKM (fluorocarbon rubber / VITON) seals
(special seals - please consult BUCHER)

A = spool type "A"

F = fixed (factory set)
S = adjusting screw
C = capped
T = tamperproof
K = handknob
M = metal handknob

0 = screw-in cartridge only
06TA = line-mounting body aluminum SAE #06 ports
06TS = line-mounting body steel SAE #06 ports
08TA = line-mounting body aluminum SAE #08 ports
08TS = line-mounting body steel SAE #08 ports

075 = pressure setting bias spring 75 psi (fixed)
100 = pressure setting bias spring 100 psi (fixed)
200 = pressure range setting 75...200 psi (adjustable)

Related data sheets

Reference	Description
520-P-000050	Form tools
520-P-000420	Cavity C1040
520-P-000421	Threaded port body B1040
520-P-000500	Adjustment Control Options

Phase-Out

info.us@bucherhydraulics.com

© 2022 by Bucher Hydraulics Inc., Elgin, IL 60124, USA

All rights reserved.
Data is provided for the purpose of product description only, and must not be construed as warranted characteristics in the legal sense. The information does not relieve users from the duty of conducting their own evaluations and tests. Because the products are subject to continual improvement, we reserve the right to amend the product specifications contained in this catalogue.

BUCHER hydraulics
WWW.SUMY.IR

Directional valve 3-way/2-position

Q_{max} = 46 l/min, p_{max} = 350 bar
direct acting, spool type, hydraulical operation
Type series: DCPS-10-_-B-...

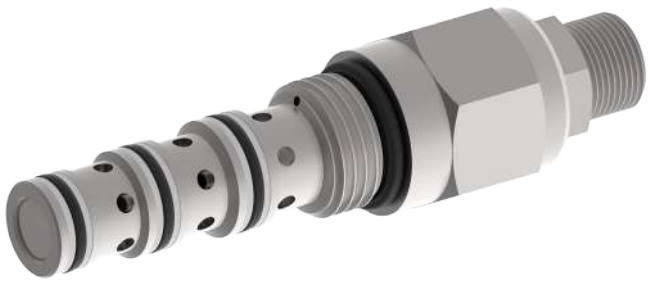

- Screw-in cartridge valve
- For cavity C1040
- All external parts zinc plated, chromited (CrVI-free)
- Installation in threaded port body type B1040
- Hardened precision fitted spool and sleeve provides reliable, long life
- Closed center transition
- This valve has a fixed or an adjustable bias spring
- A unibody cage construction provides very low hysteresis, dependable and reliable operation
- Adjustment screw can not be backed out of the valve

Description

This unit is a direct acting, screw-in cartridge style, spool type, hydraulic 3-way directional control element, requiring remote pilot actuation. This valve allows flow from port 3 to port 2 with a spring biased spool. Port 4 is blocked. The spool will shift when piloted at port 1 with sufficient pressure to overcome the spring bias and allow flow from port 3 to port 4. Spring is vented to port 4. This valve shifts in a closed center position.

Symbol

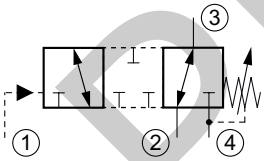

Phase-Out

WWW.SUMY.IR

Technical data

General Characteristics	Description, value, unit
Function group	Directional valve
Function	3-way/2-position
Design	Screw-in cartridge valve
Controls	hydraulical operation
Characteristic	direct acting, spool type
Transition/central position of spool/piston	zero or positive overlap (closed)
Construction size	SAE 10 / nominal size 8
Thread size	7/8-14 UNF-2A
Mounting attitude	unrestricted
Weight	0.21 kg
Cavity acc. factory standard	For cavity C1040
Tightening torque steel	77.5 Nm
Tightening torque aluminium	50.5 Nm
Tightening torque tolerance	± 5 %
Minimum ambient temperature	- 40 °C
Maximum ambient temperature	+ 120 °C
Surface protection	All external parts zinc plated, chromited (CrVI-free)
Available seal types	several seal types available, see ordering code
Seal kit order number	NBR: SKN-1042 / FKM: SKV-1042

Hydraulic Characteristics	Description, value, unit
Maximum operating pressure	350 bar
Maximum flow rate	46 l/min
Flow direction	see symbol
Hydraulic fluid	All general purpose hydraulic fluids such as MIL-H-5606, SAE-#10, SAE-#20, etc.
Minimum fluid temperature	- 25 °C
Maximum fluid temperature	+ 80 °C
Viscosity range	10 ... 500 mm^2/s (cSt)
Recommended viscosity range	20 ... 130 mm^2/s (cSt)
Minimum fluid cleanliness (cleanlineless class according to ISO 4406:1999)	class 18/16/13
Minimum set pressure	5.3 bar
Maximum set pressure	14 bar
Internal leakage flow rate	82 cc/min at 350 bar

Phase-Out

Performance graphs

measured with oil viscosity 28.5 mm²/s (cSt)

Δp = f (Q) Pressure drop-flow rate characteristic

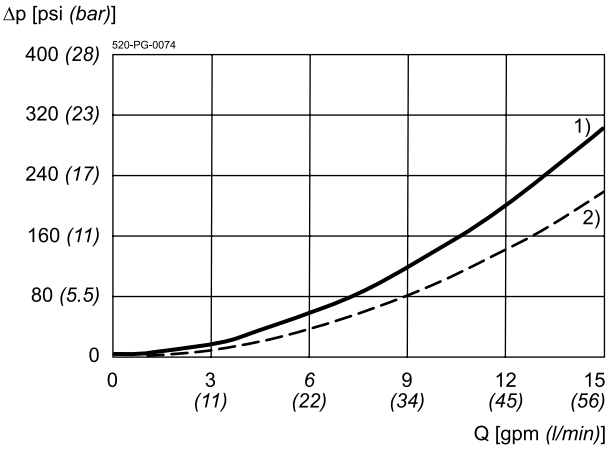

1) = 3 → 2
2) = 3 → 4

Phase-Out

Dimensions and sectional view

Beispiel für die Masseinheit:
Example for the dimensional units:

.031	= 0.031"	inch
(0.79)	= 0.79 mm	millimeter

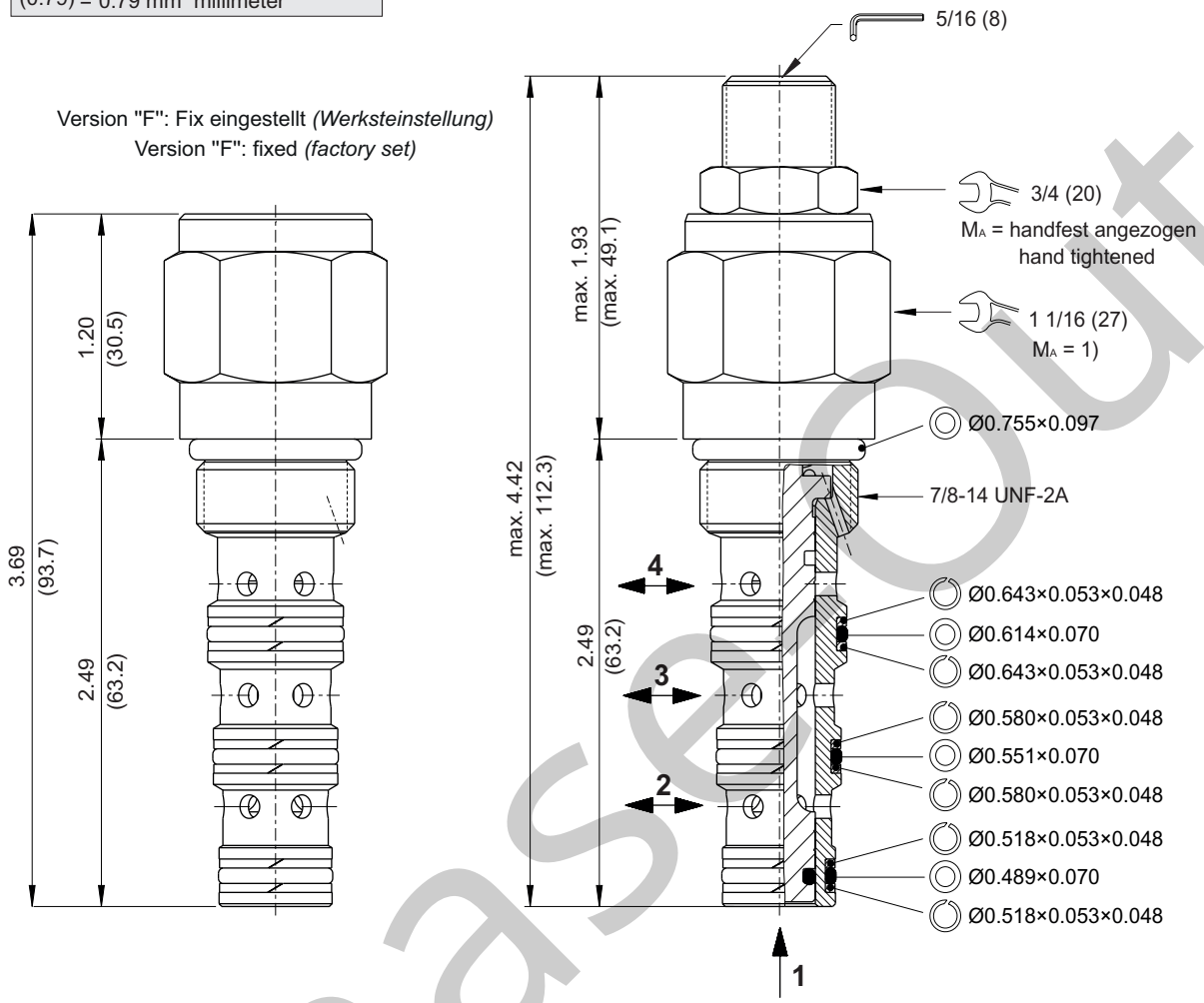

Installation information

ATTENTION!
Only qualified personnel with mechanical skills may carry out any maintenance work. Generally, the only work that should ever be undertaken is to check, and possibly replace, the seals. When changing seals, oil or grease the new seals thoroughly before fitting them.

NOTE!
The seals are not available individually. The seal kit order number can be found in the chapter "Technical data".

NOTE!
1) When fitting the screw-in cartridge valve, use the specified tightening torque. The value can be found in the chapter "Technical data".

Phase out

Ordering code

e.g. DCPS - 10 - N - B - F - 0 - 075

DCPS = directional control valve, direct acting, cartridge design

10 = nominal size SAE 10 / NG 08

N = NBR (nitril-butadien-rubber / BUNA) seals *(standard)*
V = FKM (fluorocarbon rubber / VITON) seals
(special seals - please consult BUCHER)

B = spool type "B"

F = fixed (factory set)
S = adjusting screw
C = capped
T = tamperproof
K = handknob
M = metal handknob

0 = screw-in cartridge only
06TA = line-mounting body aluminum SAE #06 ports
06TS = line-mounting body steel SAE #06 ports
08TA = line-mounting body aluminum SAE #08 ports
08TS = line-mounting body steel SAE #08 ports

075 = pressure range 75 psi (fixed)
100 = pressure range 100 psi (fixed)
200 = pressure range 75...200 psi (adjustable)

Related data sheets

Reference	Description
520-P-000050	Form tools
520-P-000420	Cavity C1040
520-P-000421	Threaded port body B1040
520-P-000500	Adjustment Control Options

Phase-Out

info.us@bucherhydraulics.com

© 2022 by Bucher Hydraulics Inc., Elgin, IL 60124, USA

All rights reserved.
Data is provided for the purpose of product description only, and must not be construed as warranted characteristics in the legal sense. The information does not relieve users from the duty of conducting their own evaluations and tests. Because the products are subject to continual improvement, we reserve the right to amend the product specifications contained in this catalogue.

BUCHER hydraulics
WWW.SUMY.IR

Directional valve 3-way/2-position

Q_{max} = 45 l/min, p_{max} = 350 bar
direct acting, spool type, hydraulical operation
Type series: DCPS-10-_-C-...

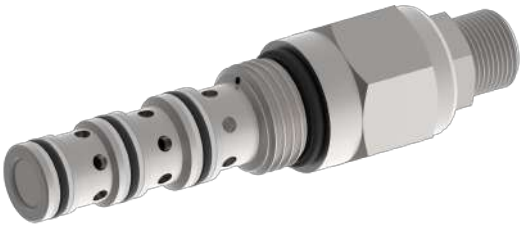

- Screw-in cartridge valve
- For cavity C1040
- All external parts zinc plated, chromited (CrVI-free)
- Installation in threaded port body type B1040
- Hardened precision fitted spool and sleeve provides reliable, long life
- Open center transition
- This valve has a fixed or an adjustable bias spring
- A unibody cage construction provides very low hysteresis, dependable and reliable operation
- Adjustment screw can not be backed out of the valve

Description

This unit is a direct acting, screw-in cartridge style, spool type, hydraulic 3-way directional control element, requiring remote pilot actuation. This valve allows flow from port 3 to port 4 with a spring biased spool. Port 2 is blocked. The spool will shift when piloted at port 1 with sufficient pressure to overcome the spring bias and allow flow from port 3 to port 2. Spring is vented to port 4. This valve shifts in an open center position.

Symbol

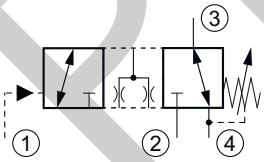

Technical data

General characteristics	Description, value, unit
Product status	Phase-Out
Function group	Directional valve
Function	3-way/2-position
Design	Screw-in cartridge valve

Phase-Out

WWW.SUMY.IR

General characteristics	Description, value, unit
Controls	hydraulical operation
Characteristic	direct acting, spool type
Transition/central position of spool/piston	zero or underlap/negative (open)
Construction size	NG 8 / SAE 10
Thread size	7/8-14 UNF-2A
Mounting attitude	unrestricted
Weight	0.21 kg
Cavity acc. factory standard	For cavity C1040
Tightening torque steel	77.5 Nm
Tightening torque aluminium	50.5 Nm
Tightening torque tolerance	± 5 %
Minimum ambient temperature	- 40 °C
Maximum ambient temperature	+ 120 °C
Surface protection	All external parts zinc plated, chromited (CrVI-free)
Sealing material	see ordering code
Seal kit order number	NBR: SKN-1042 / FKM: SKV-1042

Hydraulic characteristics	Description, value, unit
Maximum operating pressure	350 bar
Maximum flow rate	45 l/min
Flow direction	see symbol
Hydraulic fluid	All general purpose hydraulic fluids such as MIL-H-5606, SAE-#10, SAE-#20, etc.
Minimum fluid temperature	- 25 °C
Maximum fluid temperature	+ 80 °C
Viscosity range	10 ... 500 mm^2/s (cSt)
Recommended viscosity range	20 ... 130 mm^2/s (cSt)
Minimum fluid cleanliness (cleanlineless class according to ISO 4406:1999)	class 18/16/13
Minimum set pressure	5.3 bar
Maximum set pressure	14 bar
Internal leakage flow rate	82 cc/min at 350 bar
Pilot operating media	hydraulic fluid

Phase-Out

BUCHER
hydraulics
WWW.SUMY.IR

Performance graphs

measured with oil viscosity 28.5 mm²/s (cSt)

Δp = f (Q) Pressure drop-flow rate characteristic

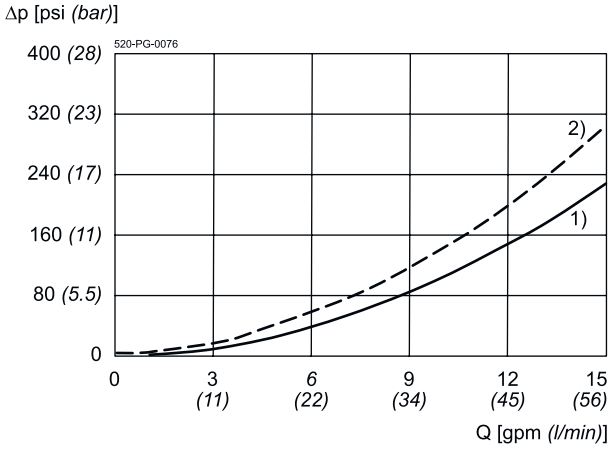

1) = 3 → 4
2) = 3 → 2

Phase-Out

Dimensions and sectional view

Beispiel für die Masseinheit:
Example for the dimensional units:

.031	= 0.031"	inch
(0.79)	= 0.79 mm	millimeter

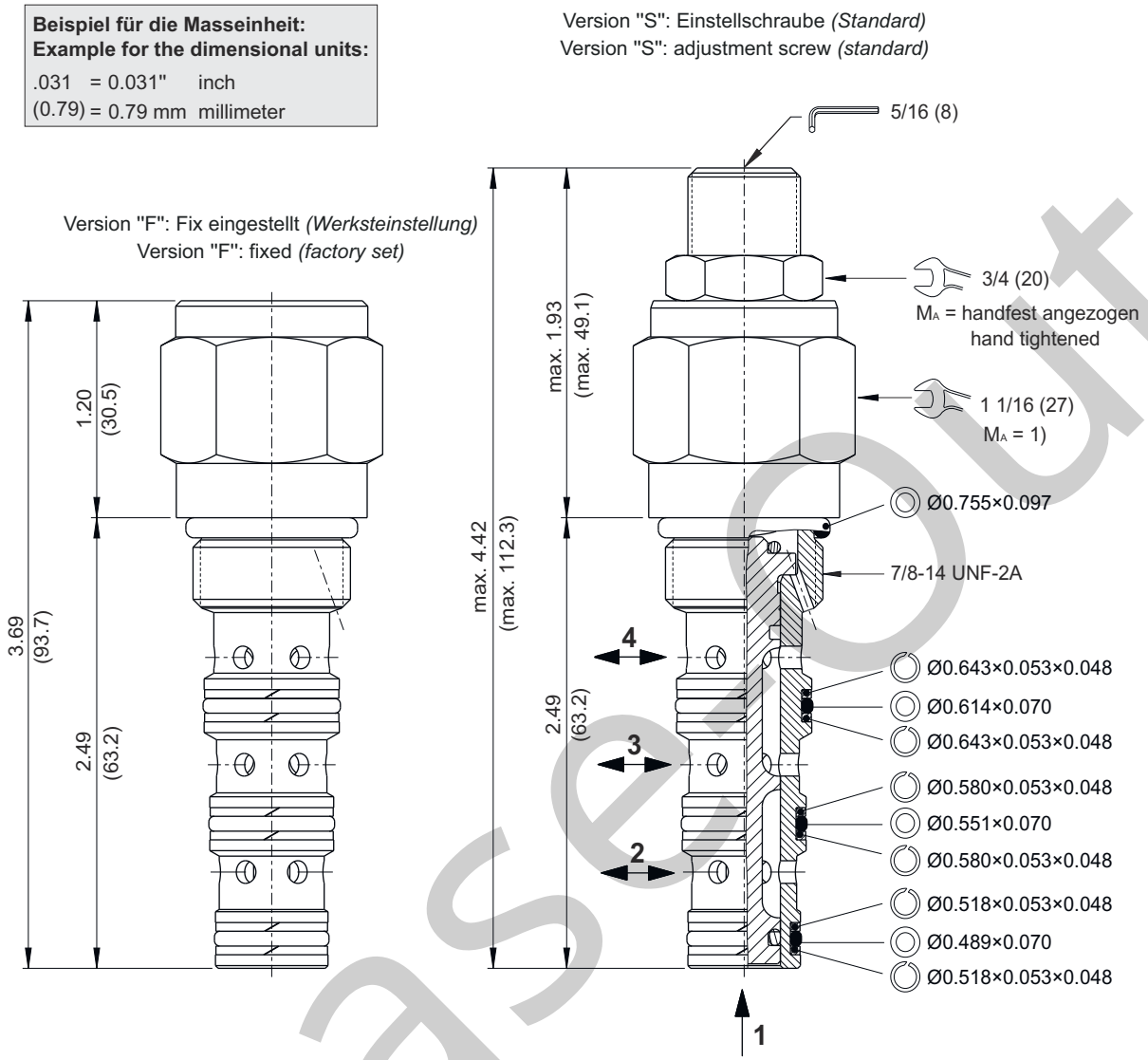

Installation information

ATTENTION!
Only qualified personnel with mechanical skills may carry out any maintenance work. Generally, the only work that should ever be undertaken is to check, and possibly replace, the seals. When changing seals, oil or grease the new seals thoroughly before fitting them.

NOTE!
1) When fitting the screw-in cartridge valve, use the specified tightening torque. The value can be found in the chapter "Technical data".

NOTE!
The seals are not available individually. The seal kit order number can be found in the chapter "Technical data".

Phase-out

Ordering code

e.g. DCPS - 10 - N - C - F - 0 - 075

DCPS = directional control valve, direct acting, cartridge design

10 = nominal size SAE 10 / NG 08

N = NBR (nitril-butadien-rubber / BUNA) seals *(standard)*
V = FKM (fluorocarbon rubber / VITON) seals
(special seals - please consult BUCHER)

C = spool type "C"

F = fixed (factory set)
S = adjusting screw
C = capped
T = tamperproof
K = handknob
M = metal handknob

0 = screw-in cartridge only
06TA = line-mounting body aluminum SAE #06 ports
06TS = line-mounting body steel SAE #06 ports
08TA = line-mounting body aluminum SAE #08 ports
08TS = line-mounting body steel SAE #08 ports

075 = pressure setting bias spring 75 psi (fixed)
100 = pressure setting bias spring 100 psi (fixed)
200 = pressure range setting 75...200 psi (adjustable)

Related data sheets

Reference	Description
520-P-000050	Form tools
520-P-000420	Cavity C1040
520-P-000421	Threaded port body B1040
520-P-000500	Operating elements Adjustment Control Options

Phase-Out

info.us@bucherhydraulics.com www.bucherhydraulics.com

© 2025 by Bucher Hydraulics Inc., Elgin, IL 60124, USA

All rights reserved.
Data is provided for the purpose of product description only, and must not be construed as warranted characteristics in the legal sense. The information does not relieve users from the duty of conducting their own evaluations and tests. Because the products are subject to continual improvement, we reserve the right to amend the product specifications contained in this catalogue.

BUCHER hydraulics
WWW.SUMY.IR

Directional valve 3-way/2-position

Q_{max} = 46 l/min, p_{max} = 350 bar
direct acting, spool type, hydraulical operation
Type series: DCPS-10-_-D-...

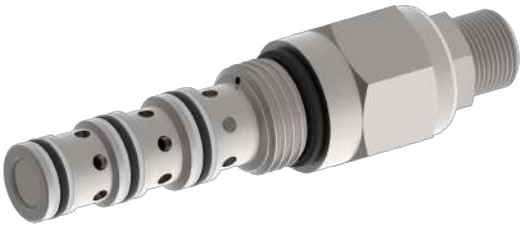

- Screw-in cartridge valve
- For cavity C1040
- All external parts zinc plated, chromited (CrVI-free)
- Installation in threaded port body type B1040
- Hardened precision fitted spool and sleeve provides reliable, long life
- Closed center transition
- This valve has a fixed or an adjustable bias spring
- A unibody cage construction provides very low hysteresis, dependable and reliable operation
- Adjustment screw can not be backed out of the valve

Description

This unit is a direct acting, screw-in cartridge style, spool type, hydraulic 3-way directional control element, requiring remote pilot actuation. This valve allows flow from port 3 to port 4 with a spring biased spool. Port 2 is blocked. The spool will shift when piloted at port 1 with sufficient pressure to overcome the spring bias and allow flow from port 3 to port 2. Spring is vented to port 4. This valve shifts in a closed center position.

Symbol

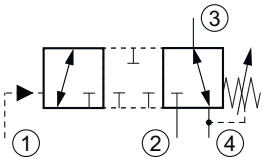

Technical data

General characteristics	Description, value, unit
Function group	Directional valve
Function	3-way/2-position
Design	Screw-in cartridge valve
Controls	hydraulical operation

WWW.SUMY.IR

General characteristics	Description, value, unit
Characteristic	direct acting, spool type
Transition/central position of spool/piston	zero or overlap/positive (closed)
Construction size	NG 8 / SAE 10
Thread size	7/8-14 UNF-2A
Mounting attitude	unrestricted
Weight	0.21 kg
Cavity acc. factory standard	For cavity C1040
Tightening torque steel	77.5 Nm
Tightening torque aluminium	50.5 Nm
Tightening torque tolerance	± 5 %
Minimum ambient temperature	- 40 °C
Maximum ambient temperature	+ 120 °C
Surface protection	All external parts zinc plated, chromited (CrVI-free)
Sealing material	see ordering code
Seal kit order number	NBR: SKN-1042 / FKM: SKV-1042

Hydraulic characteristics	Description, value, unit
Maximum operating pressure	350 bar
Maximum flow rate	46 l/min
Flow direction	see symbol
Hydraulic fluid	All general purpose hydraulic fluids such as MIL-H-5606, SAE-#10, SAE-#20, etc.
Minimum fluid temperature	- 25 °C
Maximum fluid temperature	+ 80 °C
Viscosity range	10 ... 500 mm^2/s (cSt)
Recommended viscosity range	20 ... 130 mm^2/s (cSt)
Minimum fluid cleanliness (cleanlineless class according to ISO 4406:1999)	class 18/16/13
Minimum set pressure	5.3 bar
Maximum set pressure	14 bar
Internal leakage flow rate	82 cc/min at 350 bar
Pilot operating media	hydraulic fluid

WWW.SUMY.IR

Performance graphs

measured with oil viscosity 28.5 mm²/s (cSt)

Δp = f (Q) Pressure drop-flow rate characteristic

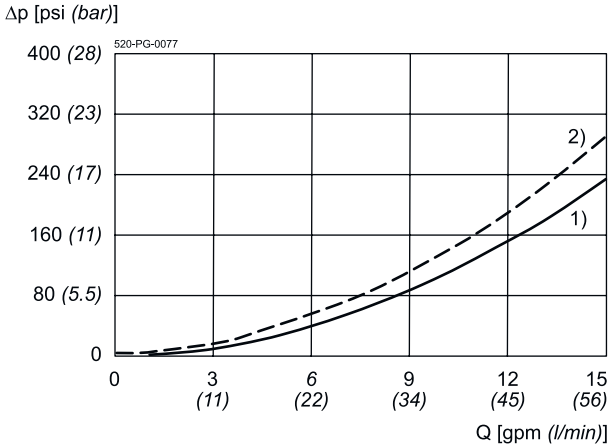

1) = 3 → 4
2) = 3 → 2

Dimensions and sectional view

Beispiel für die Masseinheit:
Example for the dimensional units:

.031	= 0.031''	inch
(0.79)	= 0.79 mm	millimeter

Version "F": Fix eingestellt *(Werksteinstellung)*
Version "F": fixed *(factory set)*

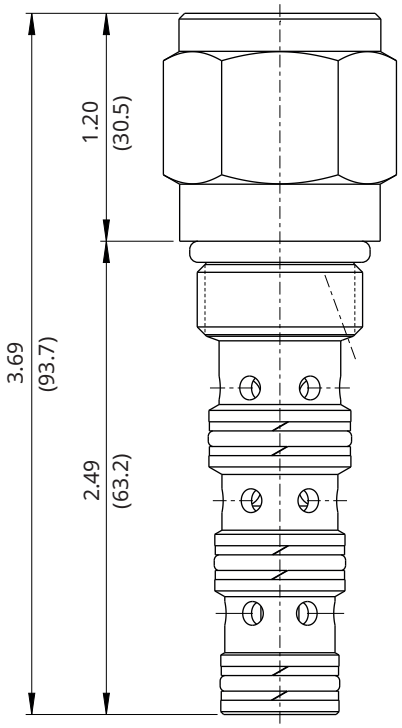

Version "S": Einstellschraube *(Standard)*
Version "S": adjustment screw *(standard)*

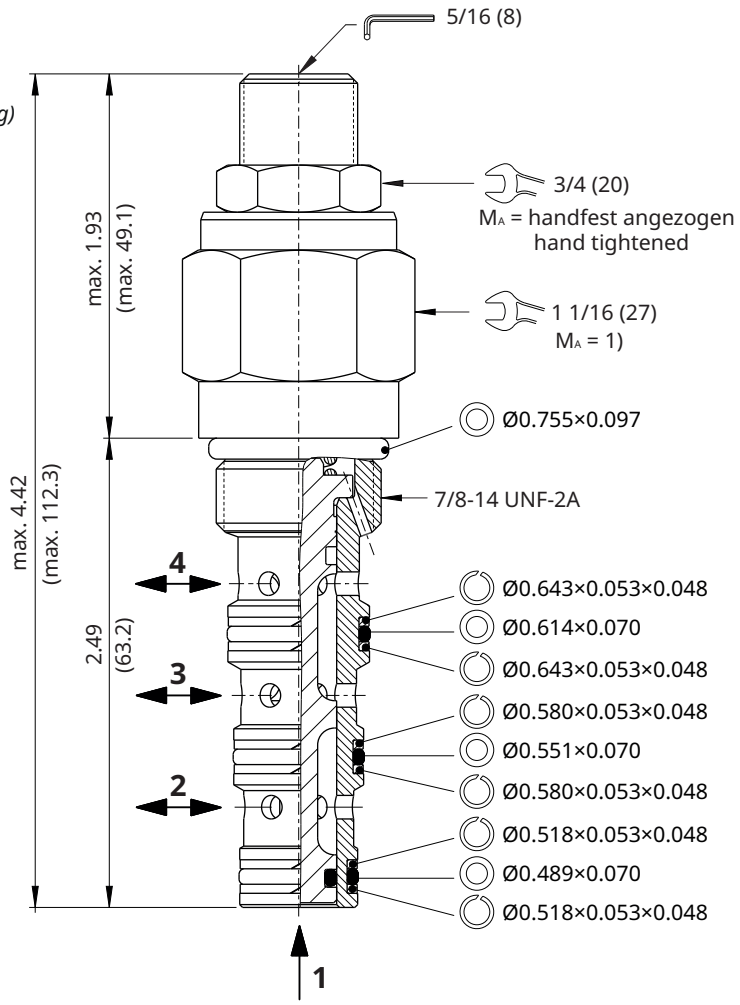

Installation information

ATTENTION!
Only qualified personnel with mechanical skills may carry out any maintenance work. Generally, the only work that should ever be undertaken is to check, and possibly replace, the seals. When changing seals, oil or grease the new seals thoroughly before fitting them.

NOTE!
1) When fitting the screw-in cartridge valve, use the specified tightening torque. The value can be found in the chapter "Technical data".

NOTE!
The seals are not available individually. The seal kit order number can be found in the chapter "Technical data".

Ordering code

e.g. DCPS - 10 - N - D - F - 0 - 075

DCPS = directional control valve, direct acting, cartridge design

10 = nominal size SAE 10 / NG 08

N = NBR (nitril-butadien-rubber / BUNA) seals *(standard)*
V = FKM (fluorocarbon rubber / VITON) seals
(special seals - please consult BUCHER)

D = spool type "D"

F = fixed (factory set)
S = adjusting screw
C = capped
T = tamperproof
K = handknob
M = metal handknob

0 = screw-in cartridge only
06TA = line-mounting body aluminum SAE #06 ports
06TS = line-mounting body steel SAE #06 ports
08TA = line-mounting body aluminum SAE #08 ports
08TS = line-mounting body steel SAE #08 ports

075 = pressure setting bias spring 75 psi (fixed)
100 = pressure setting bias spring 100 psi (fixed)
200 = pressure range setting 75...200 psi (adjustable)

Related data sheets

Reference	Description
520-P-000050	Form tools
520-P-000420	Cavity C1040
520-P-000421	Threaded port body B1040
520-P-000500	Operating elements Adjustment Control Options

info.us@bucherhydraulics.com **www.bucherhydraulics.com**

© 2025 by Bucher Hydraulics Inc., Elgin, IL 60124, USA

All rights reserved.
Data is provided for the purpose of product description only, and must not be construed as warranted characteristics in the legal sense. The information does not relieve users from the duty of conducting their own evaluations and tests. Because the products are subject to continual improvement, we reserve the right to amend the product specifications contained in this catalogue.

BUCHER hydraulics
WWW.SUMY.IR

Directional valve 3-way/2-position

Q_{max} = 45 l/min, p_{max} = 350 bar
direct acting, spool type, hydraulical operation
Type series: DCPS-10-_-E-...

- Screw-in cartridge valve
- For cavity C1040
- All external parts zinc plated, chromited (CrVI-free)
- Installation in threaded port body type B1040
- Hardened precision fitted spool and sleeve provides reliable, long life
- Open center transition
- The spring chamber is vented (V) to atmosphere
- This valve has a fixed or an adjustable bias spring
- A unibody cage construction provides very low hysteresis, dependable and reliable operation
- Adjustment screw can not be backed out of the valve

Description

This unit is a direct acting, screw-in cartridge style, spool type, hydraulic 3-way directional control element, requiring remote pilot actuation. This valve allows flow from port 3 to port 2 with a spring biased spool. Port 4 is blocked. The spool will shift when piloted at port 1 with sufficient pressure to overcome the spring bias and allow flow from port 3 to port 4. "V" spring chamber is vented to atmosphere. This valve shifts in an open center position.

Symbol

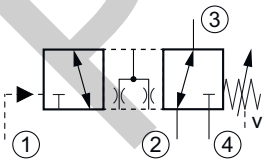

Technical data

General characteristics	Description, value, unit
Product status	Phase-Out
Function group	Directional valve
Function	3-way/2-position

Phase-Out

WWW.SUMY.IR

General characteristics	Description, value, unit
Design	Screw-in cartridge valve
Controls	hydraulical operation
Characteristic	direct acting, spool type
Transition/central position of spool/piston	zero or underlap/negative (open)
Construction size	NG 8 / SAE 10
Thread size	7/8-14 UNF-2A
Mounting attitude	unrestricted
Weight	0.21 kg
Cavity acc. factory standard	For cavity C1040
Tightening torque steel	77.5 Nm
Tightening torque aluminium	50.5 Nm
Tightening torque tolerance	± 5 %
Minimum ambient temperature	- 40 °C
Maximum ambient temperature	+ 120 °C
Surface protection	All external parts zinc plated, chromited (CrVI-free)
Sealing material	see ordering code
Seal kit order number	NBR: SKN-1042 / FKM: SKV-1042

Hydraulic characteristics	Description, value, unit
Maximum operating pressure	350 bar
Maximum flow rate	45 l/min
Flow direction	see symbol
Hydraulic fluid	All general purpose hydraulic fluids such as MIL-H-5606, SAE-#10, SAE-#20, etc.
Minimum fluid temperature	- 25 °C
Maximum fluid temperature	+ 80 °C
Viscosity range	10 ... 500 mm^2/s (cSt)
Recommended viscosity range	20 ... 130 mm^2/s (cSt)
Minimum fluid cleanliness (cleanlineless class according to ISO 4406:1999)	class 18/16/13
Minimum set pressure	5.3 bar
Maximum set pressure	14 bar
Internal leakage flow rate	82 cc/min at 350 bar
Pilot operating media	hydraulic fluid

Phase-Out

BUCHER
hydraulics
WWW.SUMY.IR

Performance graphs

measured with oil viscosity 28.5 mm²/s (cSt)

Δp = f (Q) Pressure drop-flow rate characteristic

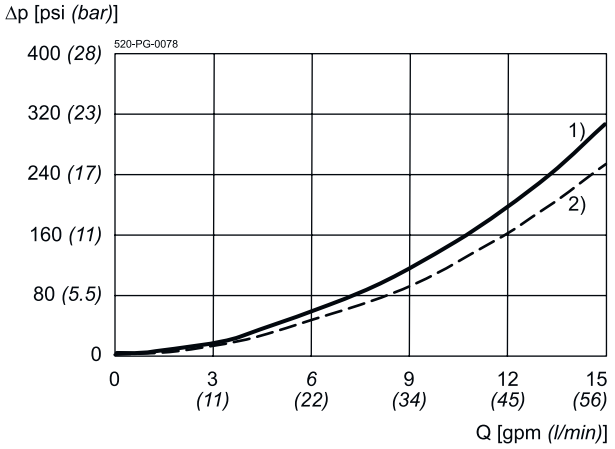

1) = 3 → 2
2) = 3 → 4

Phase-Out

Dimensions and sectional view

Beispiel für die Masseinheit:
Example for the dimensional units:
.031 = 0.031" inch
(0.79) = 0.79 mm millimeter

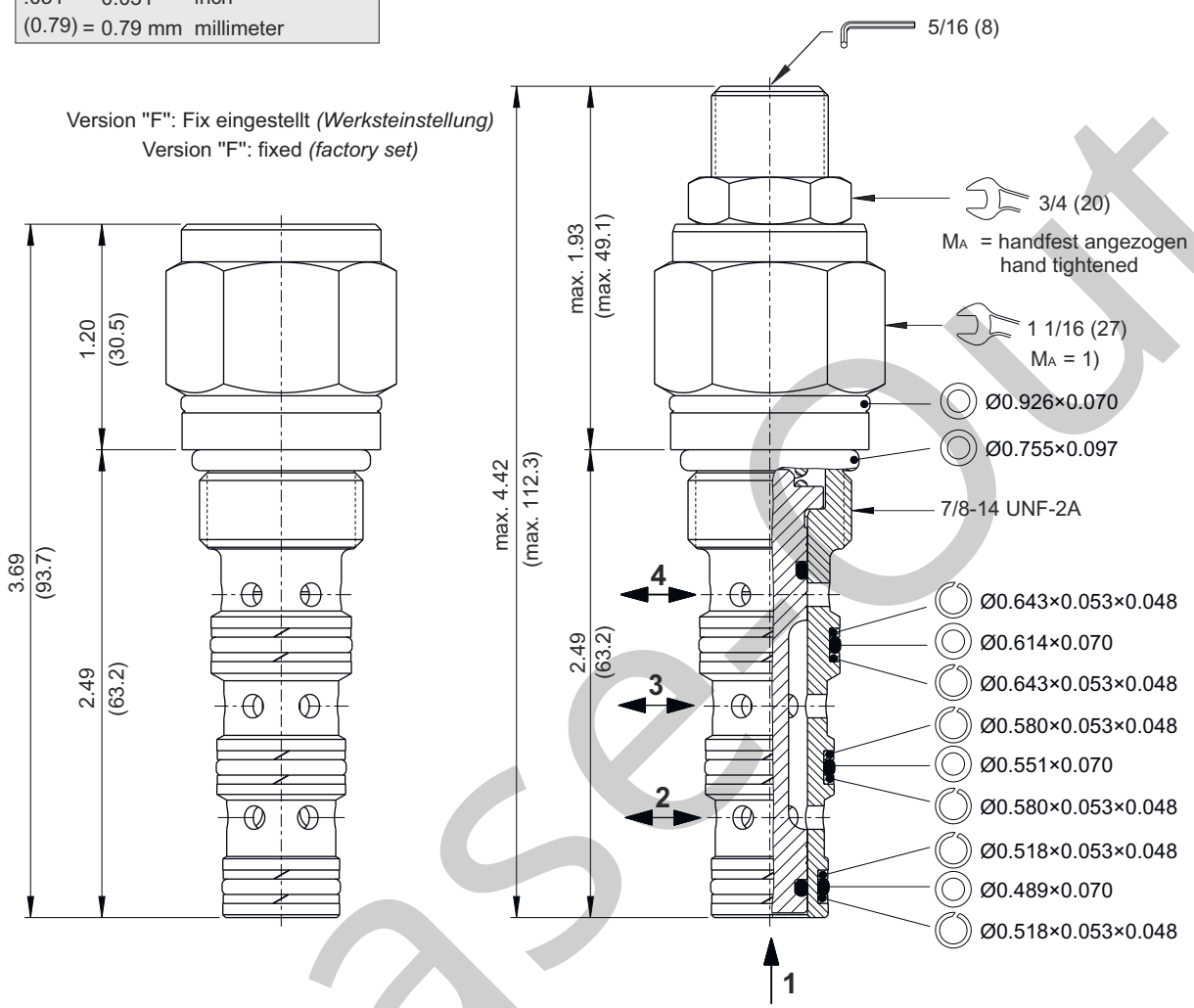

Installation information

ATTENTION!
Only qualified personnel with mechanical skills may carry out any maintenance work. Generally, the only work that should ever be undertaken is to check, and possibly replace, the seals. When changing seals, oil or grease the new seals thoroughly before fitting them.

NOTE!
1) When fitting the screw-in cartridge valve, use the specified tightening torque. The value can be found in the chapter "Technical data".

NOTE!
The seals are not available individually. The seal kit order number can be found in the chapter "Technical data".

Phase Out

Ordering code

e.g. DCPS - 10 - N - E - F - 0 - 075

DCPS = directional control valve, direct acting, cartridge design

10 = nominal size SAE 10 / NG 08

N = NBR (nitril-butadien-rubber / BUNA) seals *(standard)*
V = FKM (fluorocarbon rubber / VITON) seals
(special seals - please consult BUCHER)

E = spool type "E"

F = fixed (factory set)
S = adjusting screw
C = capped
T = tamperproof
K = handknob
M = metal handknob

0 = screw-in cartridge only
06TA = line-mounting body aluminum SAE #06 ports
06TS = line-mounting body steel SAE #06 ports
08TA = line-mounting body aluminum SAE #08 ports
08TS = line-mounting body steel SAE #08 ports

075 = pressure setting bias spring 75 psi (fixed)
100 = pressure setting bias spring 100 psi (fixed)
200 = pressure range setting 75...200 psi (adjustable)

Related data sheets

Reference	Description
520-P-000050	Form tools
520-P-000420	Cavity C1040
520-P-000421	Threaded port body B1040
520-P-000500	Operating elements Adjustment Control Options

Phase-Out

info.us@bucherhydraulics.com www.bucherhydraulics.com

© 2025 by Bucher Hydraulics Inc., Elgin, IL 60124, USA

All rights reserved.
Data is provided for the purpose of product description only, and must not be construed as warranted characteristics in the legal sense. The information does not relieve users from the duty of conducting their own evaluations and tests. Because the products are subject to continual improvement, we reserve the right to amend the product specifications contained in this catalogue.

BUCHER hydraulics

WWW.SUMY.IR

Directional valve 3-way/2-position

Q_{max} = 46 l/min, p_{max} = 350 bar
direct acting, spool type, hydraulical operation
Type series: DCPS-10-_-F-...

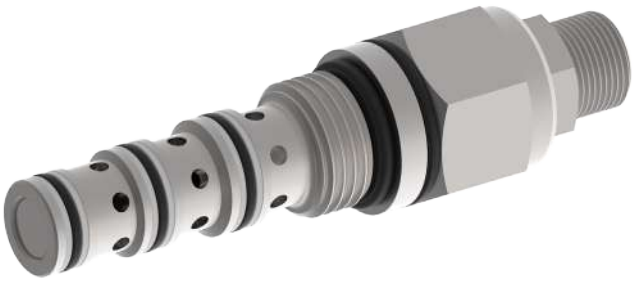

- Screw-in cartridge valve
- For cavity C1040
- All external parts zinc plated, chromited (CrVI-free)
- Installation in threaded port body type B1040
- Hardened precision fitted spool and sleeve provides reliable, long life
- Closed center transition
- The spring chamber is vented (V) to atmosphere
- This valve has a fixed or an adjustable bias spring
- A unibody cage construction provides very low hysteresis, dependable and reliable operation
- Adjustment screw can not be backed out of the valve

Description

This unit is a direct acting, screw-in cartridge style, spool type, hydraulic 3-way directional control element, requiring remote pilot actuation. This valve allows flow from port 3 to port 2 with a spring biased spool. Port 4 is blocked. The spool will shift when piloted at port 1 with sufficient pressure to overcome the spring bias and allow flow from port 3 to port 4. "V" spring chamber is vented to atmosphere. This valve shifts in a closed center position.

Symbol

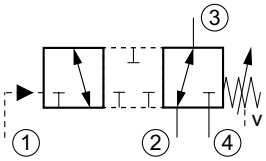

Technical data

General Characteristics	Description, value, unit
Function group	Directional valve
Function	3-way/2-position
Design	Screw-in cartridge valve
Controls	hydraulical operation
Characteristic	direct acting, spool type
Transition/central position of spool/piston	zero or positive overlap (closed)
Construction size	SAE 10 / nominal size 8
Thread size	7/8-14 UNF-2A
Mounting attitude	unrestricted
Weight	0.21 kg
Cavity acc. factory standard	For cavity C1040
Tightening torque steel	77.5 Nm
Tightening torque aluminium	50.5 Nm
Tightening torque tolerance	± 5 %
Minimum ambient temperature	- 40 °C
Maximum ambient temperature	+ 120 °C
Surface protection	All external parts zinc plated, chromited (CrVI-free)
Available seal types	several seal types available, see ordering code
Seal kit order number	NBR: SKN-1042 / FKM: SKV-1042

Hydraulic Characteristics	Description, value, unit
Maximum operating pressure	350 bar
Maximum flow rate	46 l/min
Flow direction	see symbol
Hydraulic fluid	All general purpose hydraulic fluids such as MIL-H-5606, SAE-#10, SAE-#20, etc.
Minimum fluid temperature	- 25 °C
Maximum fluid temperature	+ 80 °C
Viscosity range	10 ... 500 mm^2/s (cSt)
Recommended viscosity range	20 ... 130 mm^2/s (cSt)
Minimum fluid cleanliness (cleanlineless class according to ISO 4406:1999)	class 18/16/13
Minimum set pressure	5.3 bar
Maximum set pressure	14 bar
Internal leakage flow rate	82 cc/min at 350 bar
Pilot operating media	hydraulic fluid

Performance graphs

measured with oil viscosity 28.5 mm²/s (cSt)

Δp = f (Q) Pressure drop-flow rate characteristic

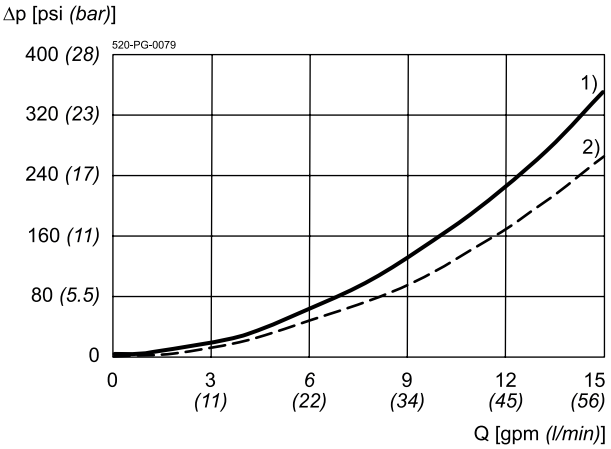

1) = 3 → 2
2) = 3 → 4

Dimensions and sectional view

Beispiel für die Masseinheit:
Example for the dimensional units:

.031 = 0.031" inch
(0.79) = 0.79 mm millimeter

Version "F": Fix eingestellt *(Werksteinstellung)*
Version "F": fixed *(factory set)*

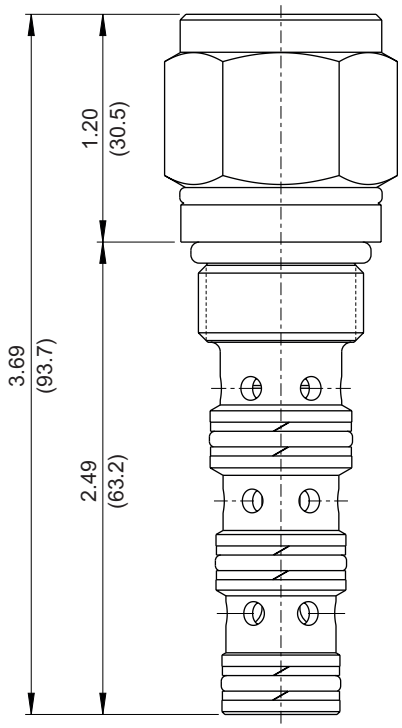

Version "S": Einstellschraube *(Standard)*
Version "S": adjustment screw *(standard)*

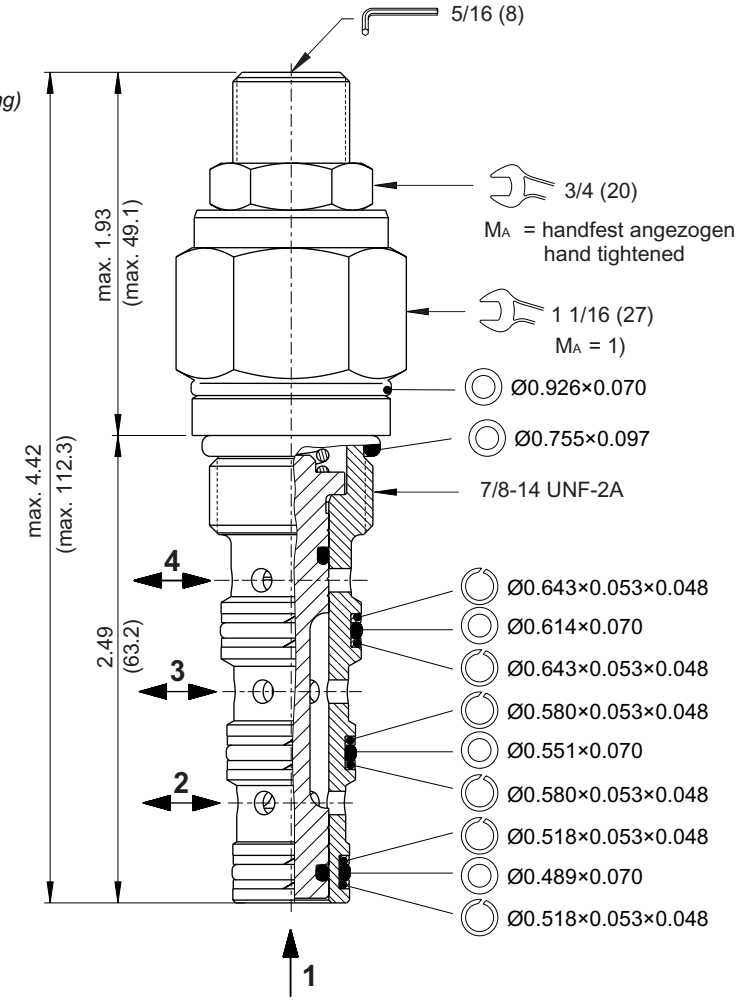

Installation information

ATTENTION!
Only qualified personnel with mechanical skills may carry out any maintenance work. Generally, the only work that should ever be undertaken is to check, and possibly replace, the seals. When changing seals, oil or grease the new seals thoroughly before fitting them.

NOTE!
The seals are not available individually. The seal kit order number can be found in the chapter "Technical data".

NOTE!
1) When fitting the screw-in cartridge valve, use the specified tightening torque. The value can be found in the chapter "Technical data".

Ordering code

e.g. DCPS - 10 - N - F - F - 0 - 075

DCPS = directional control valve, direct acting, cartridge design

10 = nominal size SAE 10 / NG 08

N = NBR (nitril-butadien-rubber / BUNA) seals *(standard)*
V = FKM (fluorocarbon rubber / VITON) seals
(special seals - please consult BUCHER)

F = spool type "F"

F = fixed (factory set)
S = adjusting screw
C = capped
T = tamperproof
K = handknob
M = metal handknob

0 = screw-in cartridge only
06TA = line-mounting body aluminum SAE #06 ports
06TS = line-mounting body steel SAE #06 ports
08TA = line-mounting body aluminum SAE #08 ports
08TS = line-mounting body steel SAE #08 ports

075 = pressure setting bias spring 75 psi (fixed)
100 = pressure setting bias spring 100 psi (fixed)
200 = pressure range setting 75...200 psi (adjustable)

Related data sheets

Reference	Description
520-P-000050	Form tools
520-P-000420	Cavity C1040
520-P-000421	Threaded port body B1040
520-P-000500	Adjustment Control Options

info.us@bucherhydraulics.com **www.bucherhydraulics.com**

© 2022 by Bucher Hydraulics Inc., Elgin, IL 60124, USA

All rights reserved.
Data is provided for the purpose of product description only, and must not be construed as warranted characteristics in the legal sense. The information does not relieve users from the duty of conducting their own evaluations and tests. Because the products are subject to continual improvement, we reserve the right to amend the product specifications contained in this catalogue.

BUCHER hydraulics
WWW.SUMY.IR

Directional valve 3-way/2-position

Q_{max} = 45 l/min, p_{max} = 350 bar
direct acting, spool type, hydraulical operation
Type series: DCPS-10-_-G-...

- Screw-in cartridge valve
- For cavity C1040
- All external parts zinc plated, chromited (CrVI-free)
- Installation in threaded port body type B1040
- Hardened precision fitted spool and sleeve provides reliable, long life
- Open center transition
- The spring chamber is vented (V) to atmosphere
- This valve has a fixed or an adjustable bias spring
- A unibody cage construction provides very low hysteresis, dependable and reliable operation
- Adjustment screw can not be backed out of the valve

Description

This unit is a direct acting, screw-in cartridge style, spool type, hydraulic 3-way directional control element, requiring remote pilot actuation. This valve allows flow from port 3 to port 4 with a spring biased spool. Port 2 is blocked. The spool will shift when piloted at port 1 with sufficient pressure to overcome the spring bias and allow flow from port 3 to port 2. "V" spring chamber is vented to atmosphere. This valve shifts in an open center position.

Symbol

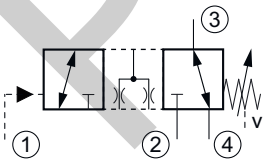

Technical data

General characteristics	Description, value, unit
Product status	Phase-Out
Function group	Directional valve
Function	3-way/2-position

Phase-Out

WWW.SUMY.IR

General characteristics	Description, value, unit
Design	Screw-in cartridge valve
Controls	hydraulical operation
Characteristic	direct acting, spool type
Transition/central position of spool/piston	zero or underlap/negative (open)
Construction size	NG 8 / SAE 10
Thread size	7/8-14 UNF-2A
Mounting attitude	unrestricted
Weight	0.21 kg
Cavity acc. factory standard	For cavity C1040
Tightening torque steel	77.5 Nm
Tightening torque aluminium	50.5 Nm
Tightening torque tolerance	± 5 %
Minimum ambient temperature	- 40 °C
Maximum ambient temperature	+ 120 °C
Surface protection	All external parts zinc plated, chromited (CrVI-free)
Sealing material	see ordering code
Seal kit order number	NBR: SKN-1042 / FKM: SKV-1042

Hydraulic characteristics	Description, value, unit
Maximum operating pressure	350 bar
Maximum flow rate	45 l/min
Flow direction	see symbol
Hydraulic fluid	All general purpose hydraulic fluids such as MIL-H-5606, SAE-#10, SAE-#20, etc.
Minimum fluid temperature	- 25 °C
Maximum fluid temperature	+ 80 °C
Viscosity range	10 ... 500 mm^2/s (cSt)
Recommended viscosity range	20 ... 130 mm^2/s (cSt)
Minimum fluid cleanliness (cleanlineless class according to ISO 4406:1999)	class 18/16/13
Minimum set pressure	5.3 bar
Maximum set pressure	14 bar
Internal leakage flow rate	82 cc/min at 350 bar
Pilot operating media	hydraulic fluid

Phase-Out

BUCHER
hydraulics
WWW.SUMY.IR

Performance graphs

measured with oil viscosity 28.5 mm²/s (cSt)

Δp = f (Q) Pressure drop-flow rate characteristic

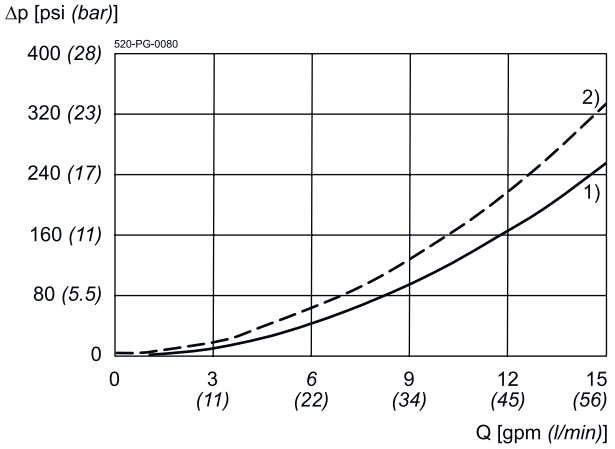

1) = 3 → 4
2) = 3 → 2

Phase-Out

Dimensions and sectional view

Beispiel für die Masseinheit:
Example for the dimensional units:

.031	= 0.031"	inch
(0.79)	= 0.79 mm	millimeter

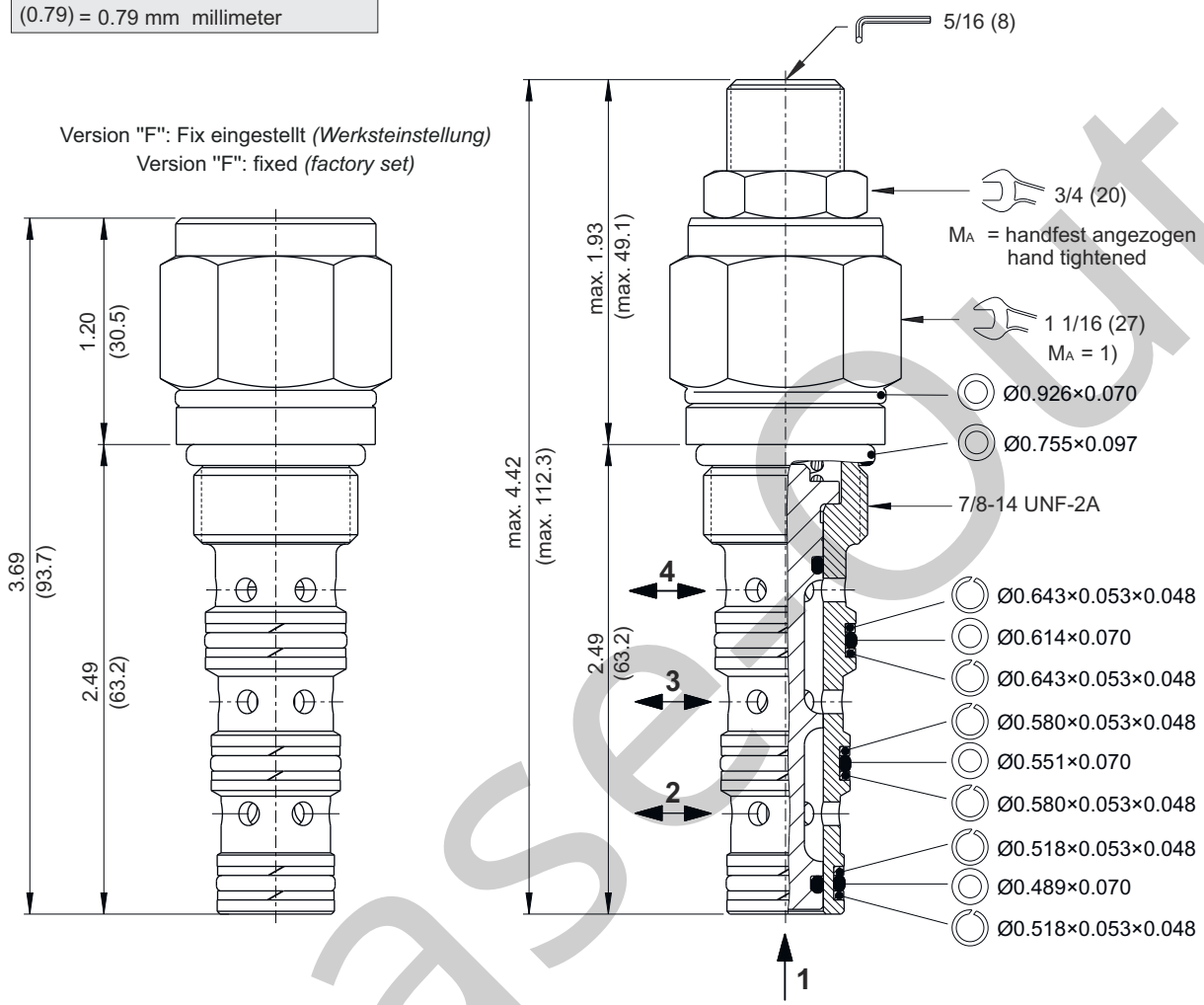

Installation information

ATTENTION!
Only qualified personnel with mechanical skills may carry out any maintenance work. Generally, the only work that should ever be undertaken is to check, and possibly replace, the seals. When changing seals, oil or grease the new seals thoroughly before fitting them.

NOTE!
1) When fitting the screw-in cartridge valve, use the specified tightening torque. The value can be found in the chapter "Technical data".

NOTE!
The seals are not available individually. The seal kit order number can be found in the chapter "Technical data".

Phase out

BUCHER hydraulics
WWW.SUMY.IR

Ordering code

e.g. DCPS - 10 - N - G - F - 0 - 075

DCPS = directional control valve, direct acting, cartridge design

10 = nominal size SAE 10 / NG 08

N = NBR (nitril-butadien-rubber / BUNA) seals *(standard)*
V = FKM (fluorocarbon rubber / VITON) seals
(special seals - please consult BUCHER)

G = spool type "G"

F = fixed (factory set)
S = adjusting screw
C = capped
T = tamperproof
K = handknob
M = metal handknob

0 = screw-in cartridge only
06TA = line-mounting body aluminum SAE #06 ports
06TS = line-mounting body steel SAE #06 ports
08TA = line-mounting body aluminum SAE #08 ports
08TS = line-mounting body steel SAE #08 ports

075 = pressure setting bias spring 75 psi (fixed)
100 = pressure setting bias spring 100 psi (fixed)
200 = pressure range setting 75...200 psi (adjustable)

Related data sheets

Reference	Description
520-P-000050	Form tools
520-P-000420	Cavity C1040
520-P-000421	Threaded port body B1040
520-P-000500	Operating elements Adjustment Control Options

Phase-Out

info.us@bucherhydraulics.com **www.bucherhydraulics.com**

© 2025 by Bucher Hydraulics Inc., Elgin, IL 60124, USA

All rights reserved.
Data is provided for the purpose of product description only, and must not be construed as warranted characteristics in the legal sense. The information does not relieve users from the duty of conducting their own evaluations and tests. Because the products are subject to continual improvement, we reserve the right to amend the product specifications contained in this catalogue.

BUCHER hydraulics
WWW.SUMY.IR

Directional valve 3-way/2-position

Q_{max} = 45 l/min, p_{max} = 350 bar
direct acting, spool type, hydraulical operation
Type series: DCPS-10-_-H-...

- Screw-in cartridge valve
- For cavity C1040
- All external parts zinc plated, chromited (CrVI-free)
- Installation in threaded port body type B1040
- Hardened precision fitted spool and sleeve provides reliable, long life
- Closed center transition
- The spring chamber is vented (V) to atmosphere
- This valve has a fixed or an adjustable bias spring
- A unibody cage construction provides very low hysteresis, dependable and reliable operation
- Adjustment screw can not be backed out of the valve

Description

This unit is a direct acting, screw-in cartridge style, spool type, hydraulic 3-way directional control element, requiring remote pilot actuation. This valve allows flow from port 3 to port 4 with a spring biased spool. Port 2 is blocked. The spool will shift when piloted at port 1 with sufficient pressure to overcome the spring bias and allow flow from port 3 to port 2. "V" spring chamber is vented to atmosphere. This valve shifts in a closed center position.

Symbol

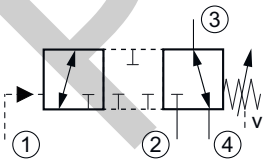

Technical data

General characteristics	Description, value, unit
Product status	Phase-Out
Function group	Directional valve
Function	3-way/2-position

Phase-Out

WWW.SUMY.IR

General characteristics	Description, value, unit
Design	Screw-in cartridge valve
Controls	hydraulical operation
Characteristic	direct acting, spool type
Transition/central position of spool/piston	zero or overlap/positive (closed)
Construction size	NG 8 / SAE 10
Thread size	7/8-14 UNF-2A
Mounting attitude	unrestricted
Weight	0.21 kg
Cavity acc. factory standard	For cavity C1040
Tightening torque steel	77.5 Nm
Tightening torque aluminium	50.5 Nm
Tightening torque tolerance	± 5 %
Minimum ambient temperature	- 40 °C
Maximum ambient temperature	+ 120 °C
Surface protection	All external parts zinc plated, chromited (CrVI-free)
Sealing material	see ordering code
Seal kit order number	NBR: SKN-10452 / FKM: SKV-10452

Hydraulic characteristics	Description, value, unit
Maximum operating pressure	350 bar
Maximum flow rate	45 l/min
Flow direction	see symbol
Hydraulic fluid	All general purpose hydraulic fluids such as MIL-H-5606, SAE-#10, SAE-#20, etc.
Minimum fluid temperature	- 25 °C
Maximum fluid temperature	+ 80 °C
Viscosity range	10 ... 500 mm^2/s (cSt)
Recommended viscosity range	20 ... 130 mm^2/s (cSt)
Minimum fluid cleanliness (cleanlineless class according to ISO 4406:1999)	class 18/16/13
Minimum set pressure	5.3 bar
Maximum set pressure	14 bar
Internal leakage flow rate	82 cc/min at 350 bar
Pilot operating media	hydraulic fluid

Phase-Out

BUCHER
hydraulics
WWW.SUMY.IR

Performance graphs

measured with oil viscosity 28.5 mm²/s (cSt)

Δp = f (Q) Pressure drop-flow rate characteristic

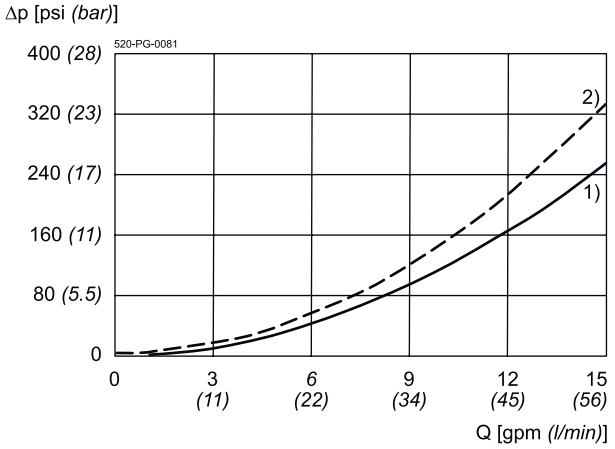

1) = 3 → 4
2) = 3 → 2

Phase-Out

Dimensions and sectional view

Beispiel für die Masseinheit:
Example for the dimensional units:
.031 = 0.031" inch
(0.79) = 0.79 mm millimeter

Version "S": Einstellschraube *(Standard)*
Version "S": adjustment screw *(standard)*

Version "F": Fix eingestellt *(Werksteinstellung)*
Version "F": fixed *(factory set)*

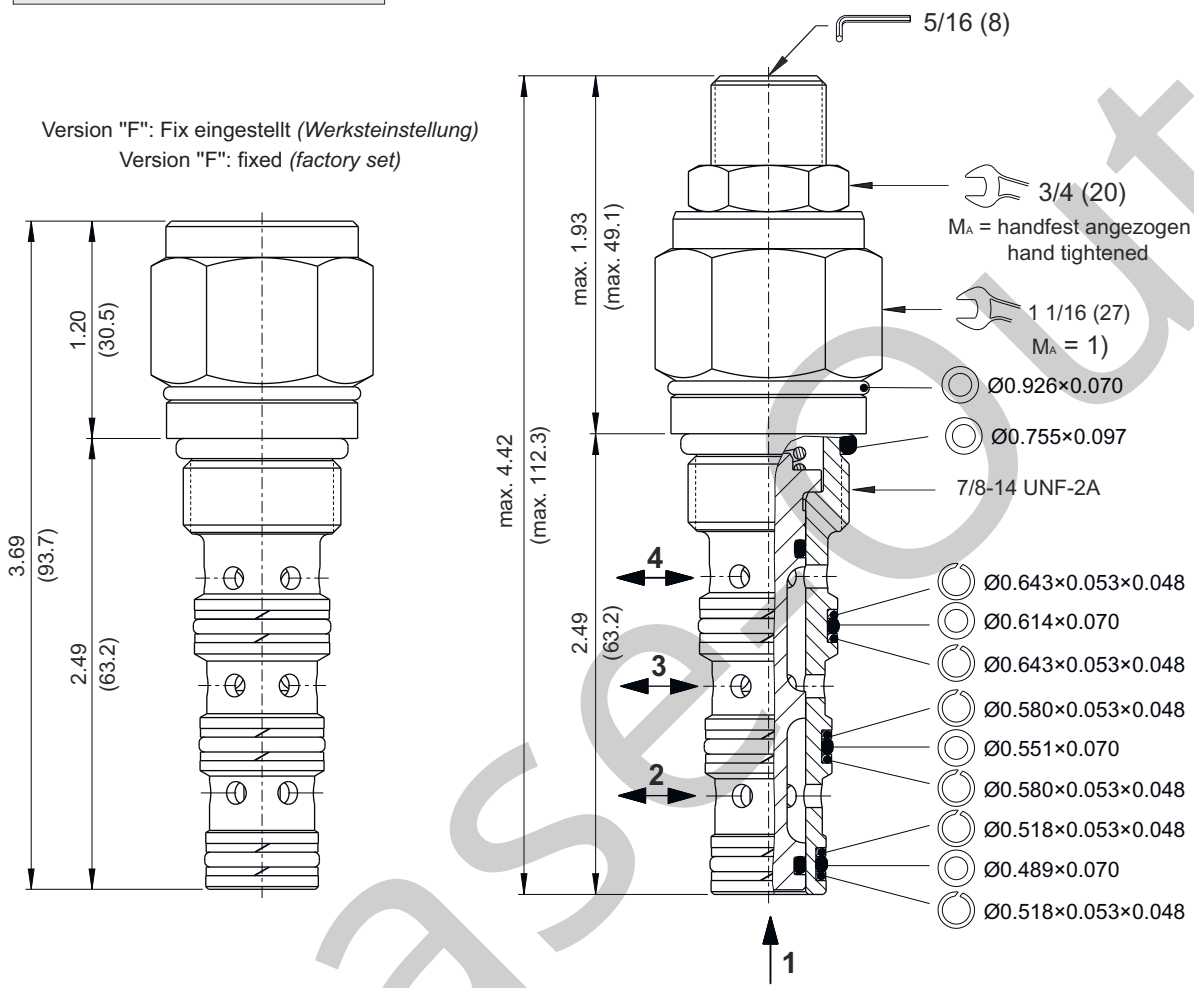

Installation information

ATTENTION!
Only qualified personnel with mechanical skills may carry out any maintenance work. Generally, the only work that should ever be undertaken is to check, and possibly replace, the seals. When changing seals, oil or grease the new seals thoroughly before fitting them.

NOTE!
1) When fitting the screw-in cartridge valve, use the specified tightening torque. The value can be found in the chapter "Technical data".

NOTE!
The seals are not available individually. The seal kit order number can be found in the chapter "Technical data".

Phase Out

BUCHER hydraulics
WWW.SUMY.IR

Ordering code

e.g. DCPS - 10 - N - H - F - 0 - 075

DCPS = directional control valve, direct acting, cartridge design

10 = nominal size SAE 10 / NG 08

N = NBR (nitril-butadien-rubber / BUNA) seals *(standard)*
V = FKM (fluorocarbon rubber / VITON) seals
(special seals - please consult BUCHER)

H = spool type "H"

F = fixed (factory set)
S = adjusting screw
C = capped
T = tamperproof
K = handknob
M = metal handknob

0 = screw-in cartridge only
06TA = line-mounting body aluminum SAE #06 ports
06TS = line-mounting body steel SAE #06 ports
08TA = line-mounting body aluminum SAE #08 ports
08TS = line-mounting body steel SAE #08 ports

075 = pressure setting bias spring 75 psi (fixed)
100 = pressure setting bias spring 100 psi (fixed)
200 = pressure range setting 75...200 psi (adjustable)

Related data sheets

Reference	Description
520-P-000050	Form tools
520-P-000420	Cavity C1040
520-P-000421	Threaded port body B1040
520-P-000500	Operating elements Adjustment Control Options

Phase-Out

info.us@bucherhydraulics.com **www.bucherhydraulics.com**

© 2025 by Bucher Hydraulics Inc., Elgin, IL 60124, USA

All rights reserved.
Data is provided for the purpose of product description only, and must not be construed as warranted characteristics in the legal sense. The information does not relieve users from the duty of conducting their own evaluations and tests. Because the products are subject to continual improvement, we reserve the right to amend the product specifications contained in this catalogue.

Cavity Type C1640

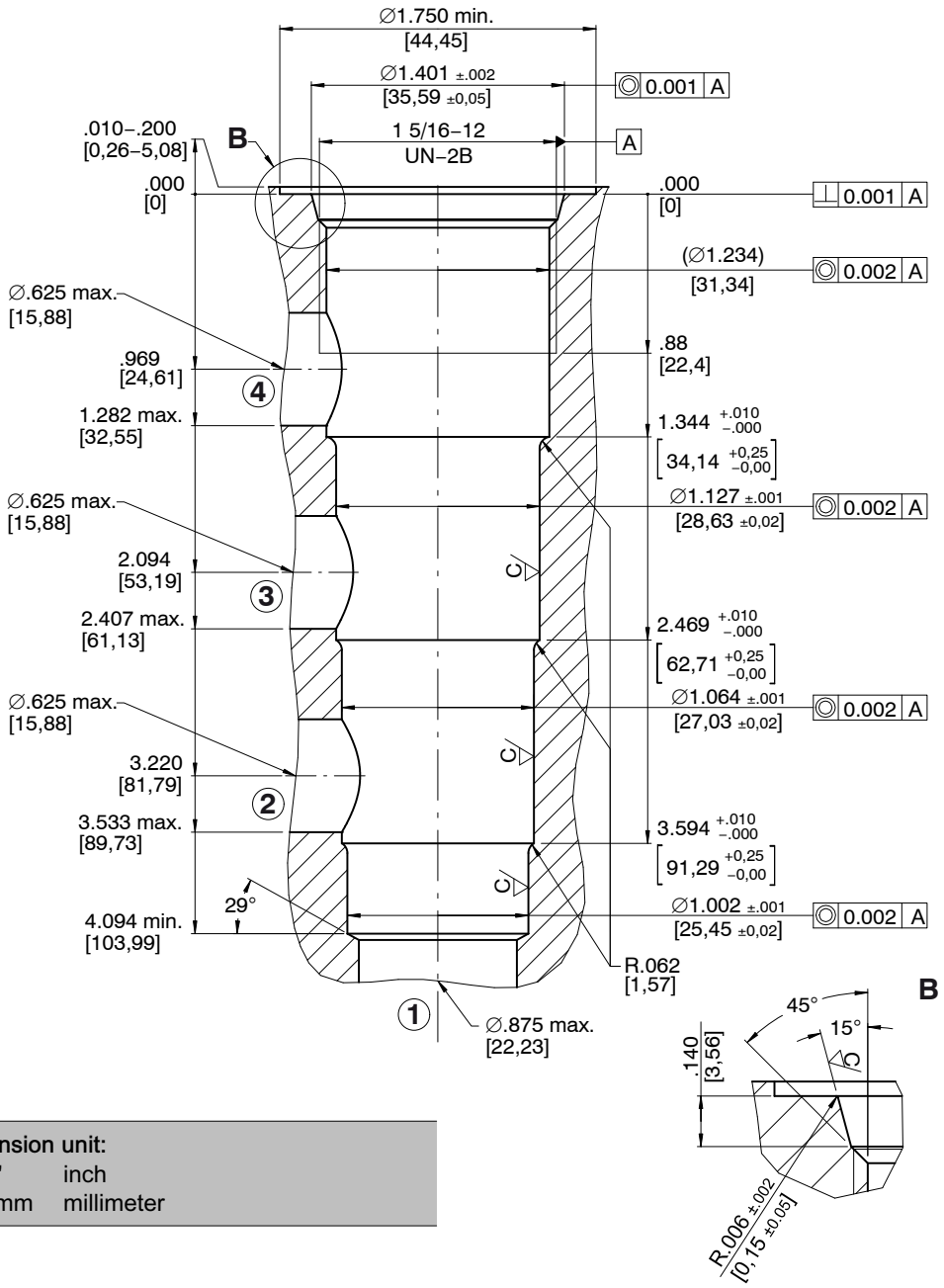

Example dimension unit:		
.010	= .010 "	inch
[0,79]	= 0,79 mm	millimeter

Dimension Tolerances	
Unless otherwise specified	
0.000	± .005″
0.00	± .010″
Angles	± 1/2°

Surface roughness		
Ra	C	D
	45 µin	125 µin
	(1.15 µm)	(3.2 µm)
	D Unless otherwise specified	

Reference: 520-P-000440-EN-01

1 Related data sheets

Reference	(Old no.)	Description
520-P-000050		The form-tool selling programme
520-P-000441	(0–044.1)	Line-mounting body, 16 Series – 4-way

info.el@bucherhydraulics.com www.bucherhydraulics.com/commoncavity

© 2016 by Bucher Hydraulics, Inc., 2545 Northwest Parkway, Elgin, Illinois 60124, USA
All rights reserved.
Data is provided for the purpose of product description only, and must not be construed as warranted characteristics in the legal sense. The information does not relieve users from the duty of conducting their own evaluations and tests. Because the products are subject to continual improvement, we reserve the right to amend the product specifications contained in this catalogue.

Classification: 430.Cavity.…

BUCHER hydraulics
WWW.SUMY.IR

Directional valve 3-way/2-position

Q_{max} = 136 l/min, p_{max} = 350 bar
direct acting, spool type, hydraulical operation
Type series: DCPS-16-_-A-...

- Screw-in cartridge valve
- For cavity C1640
- All external parts zinc plated, chromited (CrVI-free)
- Installation in threaded port body type B1640
- Hardened precision fitted spool and sleeve provides reliable, long life
- Open center transition
- A unibody cage construction provides very low hysteresis, dependable and reliable operation

Description

This unit is a direct acting, screw-in cartridge style, spool type, hydraulic 3-way directional control element, requiring remote pilot actuation. This valve allows flow from port 3 to port 2 with a spring biased spool. Port 4 is blocked. The spool will shift when piloted at port 1 with sufficient pressure to overcome the spring bias and allow flow from port 3 to port 4. Spring is vented to port 4. This valve shifts in an open center position.

Symbol

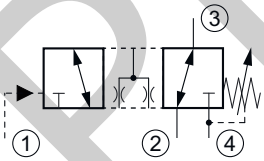

Technical data

General characteristics	Description, value, unit
Product status	Phase-Out
Function group	Directional valve
Function	3-way/2-position
Design	Screw-in cartridge valve
Controls	hydraulical operation

Phase-Out

WWW.SUMY.IR

General characteristics	Description, value, unit
Characteristic	direct acting, spool type
Transition/central position of spool/piston	zero or underlap/negative (open)
Construction size	NG 12 / SAE 16
Thread size	1 5/16-12 UN-2A
Mounting attitude	unrestricted
Weight	0.68 kg
Cavity acc. factory standard	For cavity C1640
Tightening torque steel	132.5 Nm
Tightening torque aluminium	98.5 Nm
Tightening torque tolerance	± 5 %
Minimum ambient temperature	- 40 °C
Maximum ambient temperature	+ 120 °C
Surface protection	All external parts zinc plated, chromited (CrVI-free)
Sealing material	see ordering code
Seal kit order number	NBR: SKN-1642 / FKM: SKV-1642

Hydraulic characteristics	Description, value, unit
Maximum operating pressure	350 bar
Maximum flow rate	136 l/min
Flow direction	see symbol
Hydraulic fluid	All general purpose hydraulic fluids such as MIL-H-5606, SAE-#10, SAE-#20, etc.
Minimum fluid temperature	- 25 °C
Maximum fluid temperature	+ 80 °C
Viscosity range	10 ... 500 mm^2/s (cSt)
Recommended viscosity range	20 ... 130 mm^2/s (cSt)
Minimum fluid cleanliness (cleanlineless class according to ISO 4406:1999)	class 18/16/13
Minimum set pressure	4 bar
Maximum set pressure	11 bar
Internal leakage flow rate	82 cc/min at 350 bar
Pilot operating media	hydraulic fluid

Phase-Out

BUCHER hydraulics
WWW.SUMY.IR

Performance graphs

measured with oil viscosity 28.5 mm²/s (cSt)

Δp = f (Q) Pressure drop-flow rate characteristic

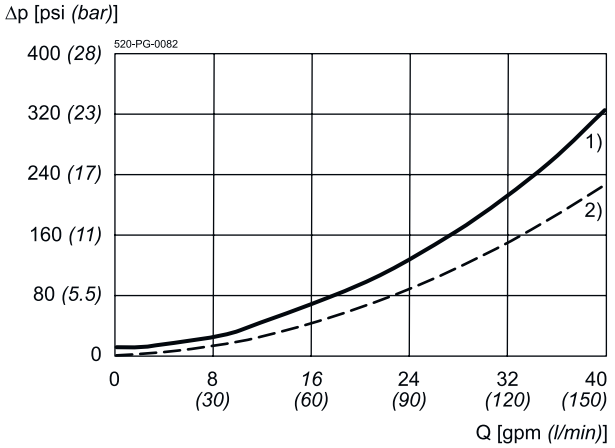

1) = 3 → 2
2) = 3 → 4

Dimensions and sectional view

Beispiel für die Masseinheit:
Example for the dimensional units:

.031	= 0.031"	inch
(0.79)	= 0.79 mm	millimeter

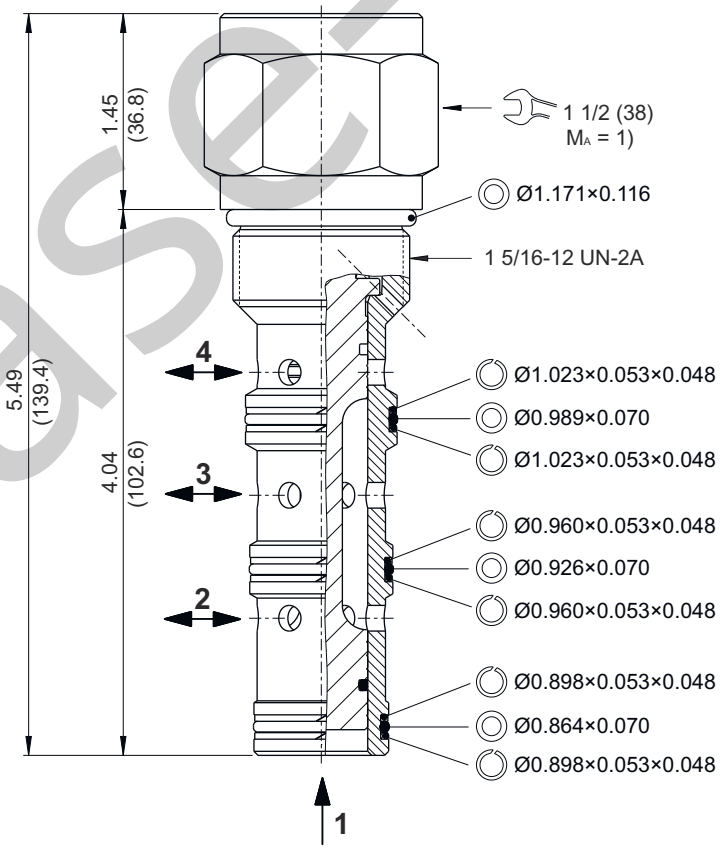

Phase-Out

Installation information

ATTENTION!
Only qualified personnel with mechanical skills may carry out any maintenance work. Generally, the only work that should ever be undertaken is to check, and possibly replace, the seals. When changing seals, oil or grease the new seals thoroughly before fitting them.

NOTE!
1) When fitting the screw-in cartridge valve, use the specified tightening torque. The value can be found in the chapter "Technical data".

NOTE!
The seals are not available individually. The seal kit order number can be found in the chapter "Technical data".

Ordering code

e.g. DCPS - 16 - N - A - F - 0 - 060

DCPS	= directional control valve, direct acting, cartridge design
16	= nominal size SAE 16 / NG 12
N	= NBR (nitril-butadien-rubber / BUNA) seals *(standard)*
V	= FKM (fluorocarbon rubber / VITON) seals *(special seals - please consult BUCHER)*
A	= spool type "A"
F	= fixed (factory set)
0	= screw-in cartridge only
12TA	= line-mounting body aluminum SAE #12 ports
12TS	= line-mounting body steel SAE #12 ports
16TA	= line-mounting body aluminum SAE #16 ports
16TS	= line-mounting body steel SAE #16 ports
060	= pressure setting bias spring 60 psi
120	= pressure setting bias spring 120 psi
160	= pressure setting bias spring 160 psi

Related data sheets

Reference	Description
520-P-000050	Form tools
520-P-000440	Cavity C1640
520-P-000441	Threaded port body B1640

Phase-Out

info.us@bucherhydraulics.com www.bucherhydraulics.com

© 2025 by Bucher Hydraulics Inc., Elgin, IL 60124, USA

All rights reserved.
Data is provided for the purpose of product description only, and must not be construed as warranted characteristics in the legal sense. The information does not relieve users from the duty of conducting their own evaluations and tests. Because the products are subject to continual improvement, we reserve the right to amend the product specifications contained in this catalogue.

BUCHER hydraulics
WWW.SUMY.IR

Directional valve 3-way/2-position

Q_{max} = 136 l/min, p_{max} = 350 bar
direct acting, spool type, hydraulical operation
Type series: DCPS-16-_-B-...

- Screw-in cartridge valve
- For cavity C1640
- All external parts zinc plated, chromited (CrVI-free)
- Installation in threaded port body type B1640
- Hardened precision fitted spool and sleeve provides reliable, long life
- Closed center transition
- A unibody cage construction provides very low hysteresis, dependable and reliable operation

Description

This unit is a direct acting, screw-in cartridge style, spool type, hydraulic 3-way directional control element, requiring remote pilot actuation. This valve allows flow from port 3 to port 2 with a spring biased spool. Port 4 is blocked. The spool will shift when piloted at port 1 with sufficient pressure to overcome the spring bias and allow flow from port 3 to port 4. Spring is vented to port 4. This valve shifts in a closed center position.

Symbol

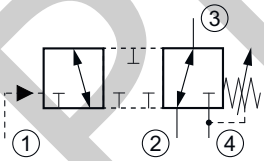

Technical data

General characteristics	Description, value, unit
Product status	Phase-Out
Function group	Directional valve
Function	3-way/2-position
Design	Screw-in cartridge valve
Controls	hydraulical operation

Phase-Out

WWW.SUMY.IR

General characteristics	Description, value, unit
Characteristic	direct acting, spool type
Transition/central position of spool/piston	zero or overlap/positive (closed)
Construction size	NG 12 / SAE 16
Thread size	1 5/16-12 UN-2A
Mounting attitude	unrestricted
Weight	0.68 kg
Cavity acc. factory standard	For cavity C1640
Tightening torque steel	132.5 Nm
Tightening torque aluminium	98.5 Nm
Tightening torque tolerance	± 5 %
Minimum ambient temperature	- 40 °C
Maximum ambient temperature	+ 120 °C
Surface protection	All external parts zinc plated, chromited (CrVI-free)
Sealing material	see ordering code
Seal kit order number	NBR: SKN-1642 / FKM: SKV-1642

Hydraulic characteristics	Description, value, unit
Maximum operating pressure	350 bar
Maximum flow rate	136 l/min
Flow direction	see symbol
Hydraulic fluid	All general purpose hydraulic fluids such as MIL-H-5606, SAE-#10, SAE-#20, etc.
Minimum fluid temperature	- 25 °C
Maximum fluid temperature	+ 80 °C
Viscosity range	10 ... 500 mm^2/s (cSt)
Recommended viscosity range	20 ... 130 mm^2/s (cSt)
Minimum fluid cleanliness (cleanlineless class according to ISO 4406:1999)	class 18/16/13
Minimum set pressure	5.3 bar
Maximum set pressure	14 bar
Internal leakage flow rate	82 cc/min at 350 bar
Pilot operating media	hydraulic fluid

Phase-Out

BUCHER hydraulics
WWW.SUMY.IR

Performance graphs

measured with oil viscosity 28.5 mm²/s (cSt)

Δp = f (Q) Pressure drop-flow rate characteristic

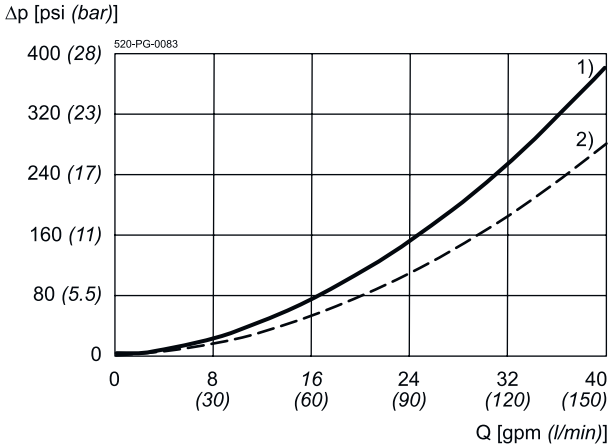

1) = 3 → 2
2) = 3 → 4

Dimensions and sectional view

Beispiel für die Masseinheit:
Example for the dimensional units:

.031	= 0.031"	inch
(0.79)	= 0.79 mm	millimeter

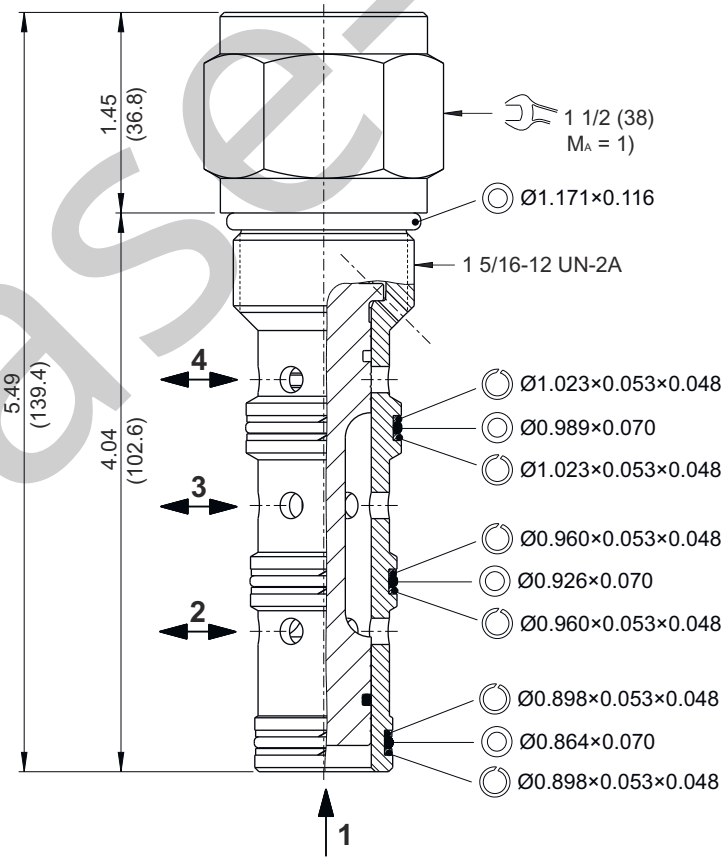

Phase-Out

Installation information

ATTENTION!
Only qualified personnel with mechanical skills may carry out any maintenance work. Generally, the only work that should ever be undertaken is to check, and possibly replace, the seals. When changing seals, oil or grease the new seals thoroughly before fitting them.

NOTE!
1) When fitting the screw-in cartridge valve, use the specified tightening torque. The value can be found in the chapter "Technical data".

NOTE!
The seals are not available individually. The seal kit order number can be found in the chapter "Technical data".

Ordering code

e.g. DCPS - 16 - N - B - F - 0 - 060

DCPS	= directional control valve, direct acting, cartridge design
16	= nominal size SAE 16 / NG 12
N	= NBR (nitril-butadien-rubber / BUNA) seals *(standard)*
V	= FKM (fluorocarbon rubber / VITON) seals *(special seals - please consult BUCHER)*
B	= spool type "B"
F	= fixed (factory set)
0	= screw-in cartridge only
12TA	= line-mounting body aluminum SAE #12 ports
12TS	= line-mounting body steel SAE #12 ports
16TA	= line-mounting body aluminum SAE #16 ports
16TS	= line-mounting body steel SAE #16 ports
060	= pressure setting bias spring 60 psi
120	= pressure setting bias spring 120 psi
160	= pressure setting bias spring 160 psi

Related data sheets

Reference	Description
520-P-000050	Form tools
520-P-000440	Cavity C1640
520-P-000441	Threaded port body B1640

Phase-Out

info.us@bucherhydraulics.com www.bucherhydraulics.com

© 2025 by Bucher Hydraulics Inc., Elgin, IL 60124, USA

All rights reserved.
Data is provided for the purpose of product description only, and must not be construed as warranted characteristics in the legal sense. The information does not relieve users from the duty of conducting their own evaluations and tests. Because the products are subject to continual improvement, we reserve the right to amend the product specifications contained in this catalogue.

BUCHER hydraulics

WWW.SUMY.IR

Directional valve 3-way/2-position

Q_{max} = 136 l/min, p_{max} = 350 bar
direct acting, spool type, hydraulical operation
Type series: DCPS-16-_-C-...

- Screw-in cartridge valve
- For cavity C1640
- All external parts zinc plated, chromited (CrVI-free)
- Installation in threaded port body type B1640
- Hardened precision fitted spool and sleeve provides reliable, long life
- Open center transition
- A unibody cage construction provides very low hysteresis, dependable and reliable operation

Description

This unit is a direct acting, screw-in cartridge style, spool type, hydraulic 3-way directional control element, requiring remote pilot actuation. This valve allows flow from port 3 to port 4 with a spring biased spool. Port 2 is blocked. The spool will shift when piloted at port 1 with sufficient pressure to overcome the spring bias and allow flow from port 3 to port 2. Spring is vented to port 4. This valve shifts in an open center position.

Symbol

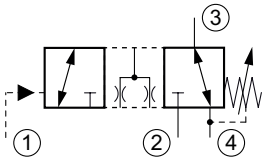

Technical data

General Characteristics	Description, value, unit
Function group	Directional valve
Function	3-way/2-position
Design	Screw-in cartridge valve
Controls	hydraulical operation
Characteristic	direct acting, spool type
Transition/central position of spool/piston	zero overlap or underlap (open)
Construction size	SAE 16 / nominal size 12
Thread size	1 5/16-12 UN-2A
Mounting attitude	unrestricted
Weight	0.68 kg
Cavity acc. factory standard	For cavity C1640
Tightening torque steel	132.5 Nm
Tightening torque aluminium	98.5 Nm
Tightening torque tolerance	± 5 %
Minimum ambient temperature	- 40 °C
Maximum ambient temperature	+ 120 °C
Surface protection	All external parts zinc plated, chromited (CrVI-free)
Available seal types	several seal types available, see ordering code
Seal kit order number	NBR: SKN-1642 / FKM: SKV-1642

Hydraulic Characteristics	Description, value, unit
Maximum operating pressure	350 bar
Maximum flow rate	136 l/min
Flow direction	see symbol
Hydraulic fluid	All general purpose hydraulic fluids such as MIL-H-5606, SAE-#10, SAE-#20, etc.
Minimum fluid temperature	- 25 °C
Maximum fluid temperature	+ 80 °C
Viscosity range	10 ... 500 mm^2/s (cSt)
Recommended viscosity range	20 ... 130 mm^2/s (cSt)
Minimum fluid cleanliness (cleanlineless class according to ISO 4406:1999)	class 18/16/13
Minimum set pressure	4 bar
Maximum set pressure	11 bar
Internal leakage flow rate	82 cc/min at 350 bar
Pilot operating media	hydraulic fluid

Performance graphs

measured with oil viscosity 28.5 mm²/s (cSt)

Δp = f (Q) Pressure drop-flow rate characteristic

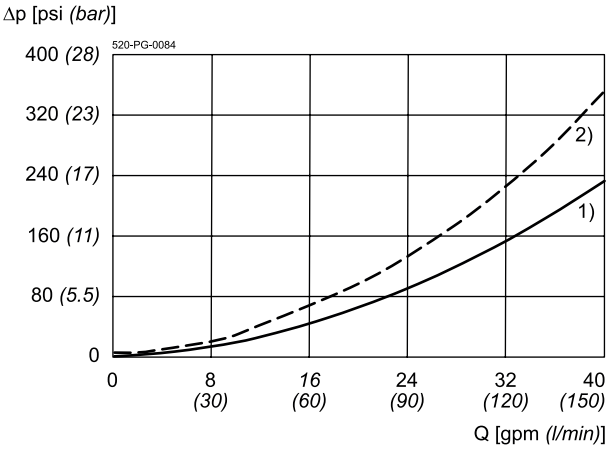

1) = 3 → 4
2) = 3 → 2

Dimensions and sectional view

Beispiel für die Masseinheit:
Example for the dimensional units:

.031 = 0.031" inch
(0.79) = 0.79 mm millimeter

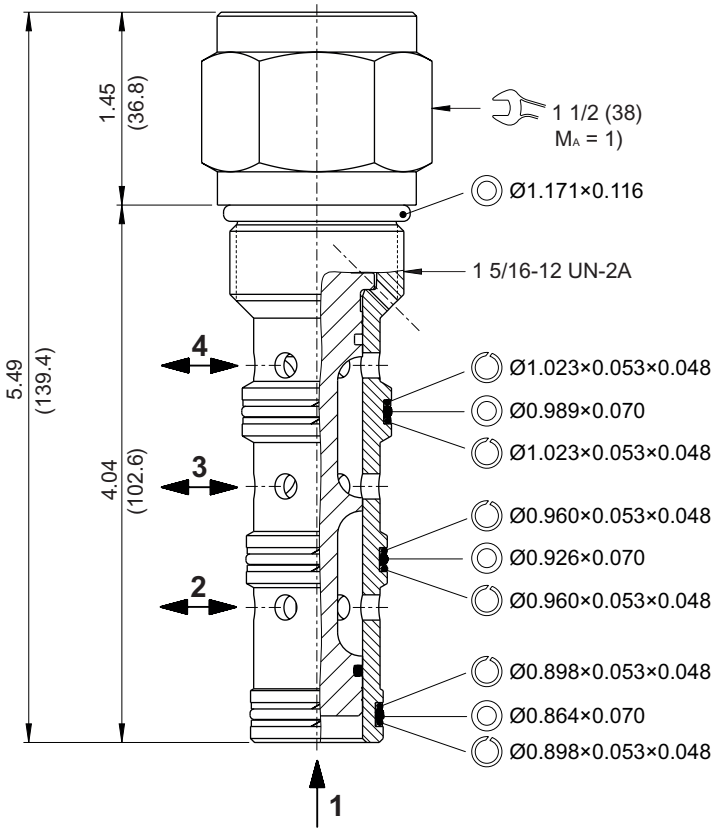

Installation information

ATTENTION!
Only qualified personnel with mechanical skills may carry out any maintenance work. Generally, the only work that should ever be undertaken is to check, and possibly replace, the seals. When changing seals, oil or grease the new seals thoroughly before fitting them.

NOTE!
The seals are not available individually. The seal kit order number can be found in the chapter "Technical data".

NOTE!
1) When fitting the screw-in cartridge valve, use the specified tightening torque. The value can be found in the chapter "Technical data".

Ordering code

e.g. DCPS - 16 - N - C - F - 0 - 060

DCPS = directional control valve, direct acting, cartridge design

16 = nominal size SAE 16 / NG 12

N = NBR (nitril-butadien-rubber / BUNA) seals *(standard)*
V = FKM (fluorocarbon rubber / VITON) seals
(special seals - please consult BUCHER)

C = spool type "C"

F = fixed (factory set)

0 = screw-in cartridge only
12TA = line-mounting body aluminum SAE #12 ports
12TS = line-mounting body steel SAE #12 ports
16TA = line-mounting body aluminum SAE #16 ports
16TS = line-mounting body steel SAE #16 ports

060 = pressure setting bias spring 60 psi
120 = pressure setting bias spring 120 psi
160 = pressure setting bias spring 160 psi

Related data sheets

Reference	Description
520-P-000050	Form tools
520-P-000440	Cavity C1640
520-P-000441	Threaded port body B1640

info.us@bucherhydraulics.com **www.bucherhydraulics.com**

© 2022 by Bucher Hydraulics Inc., Elgin, IL 60124, USA

All rights reserved.
Data is provided for the purpose of product description only, and must not be construed as warranted characteristics in the legal sense. The information does not relieve users from the duty of conducting their own evaluations and tests. Because the products are subject to continual improvement, we reserve the right to amend the product specifications contained in this catalogue.

BUCHER hydraulics
WWW.SUMY.IR

Directional valve 3-way/2-position

Q_{max} = 136 l/min, p_{max} = 350 bar
direct acting, spool type, hydraulical operation
Type series: DCPS-16-_-D-...

- Screw-in cartridge valve
- For cavity C1640
- All external parts zinc plated, chromited (CrVI-free)
- Installation in threaded port body type B1640
- Hardened precision fitted spool and sleeve provides reliable, long life
- Closed center transition
- A unibody cage construction provides very low hysteresis, dependable and reliable operation

Description

This unit is a direct acting, screw-in cartridge style, spool type, hydraulic 3-way directional control element, requiring remote pilot actuation. This valve allows flow from port 3 to port 4 with a spring biased spool. Port 2 is blocked. The spool will shift when piloted at port 1 with sufficient pressure to overcome the spring bias and allow flow from port 3 to port 2. Spring is vented to port 4. This valve shifts in a closed center position.

Symbol

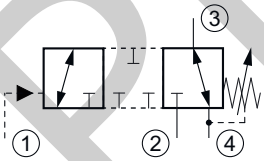

Technical data

General characteristics	Description, value, unit
Product status	Phase-Out
Function group	Directional valve
Function	3-way/2-position
Design	Screw-in cartridge valve
Controls	hydraulical operation

Phase-Out

WWW.SUMY.IR

General characteristics	Description, value, unit
Characteristic	direct acting, spool type
Transition/central position of spool/piston	zero or overlap/positive (closed)
Construction size	NG 12 / SAE 16
Thread size	1 5/16-12 UN-2A
Mounting attitude	unrestricted
Weight	0.68 kg
Cavity acc. factory standard	For cavity C1640
Tightening torque steel	132.5 Nm
Tightening torque aluminium	98.5 Nm
Tightening torque tolerance	± 5 %
Minimum ambient temperature	- 40 °C
Maximum ambient temperature	+ 120 °C
Surface protection	All external parts zinc plated, chromited (CrVI-free)
Sealing material	see ordering code
Seal kit order number	NBR: SKN-1642 / FKM: SKV-1642

Hydraulic characteristics	Description, value, unit
Maximum operating pressure	350 bar
Maximum flow rate	136 l/min
Flow direction	see symbol
Hydraulic fluid	All general purpose hydraulic fluids such as MIL-H-5606, SAE-#10, SAE-#20, etc.
Minimum fluid temperature	- 25 °C
Maximum fluid temperature	+ 80 °C
Viscosity range	10 ... 500 mm^2/s (cSt)
Recommended viscosity range	20 ... 130 mm^2/s (cSt)
Minimum fluid cleanliness (cleanlineless class according to ISO 4406:1999)	class 18/16/13
Minimum set pressure	4 bar
Maximum set pressure	11 bar
Internal leakage flow rate	82 cc/min at 350 bar
Pilot operating media	hydraulic fluid

Phase-Out

BUCHER hydraulics
WWW.SUMY.IR

Performance graphs

measured with oil viscosity 28.5 mm²/s (cSt)

Δp = f (Q) Pressure drop-flow rate characteristic

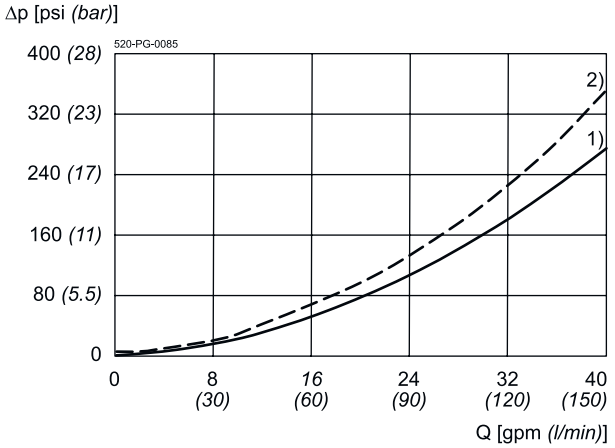

1) = 3 → 4
2) = 3 → 2

Dimensions and sectional view

Beispiel für die Masseinheit:
Example for the dimensional units:

.031	= 0.031"	inch
(0.79)	= 0.79 mm	millimeter

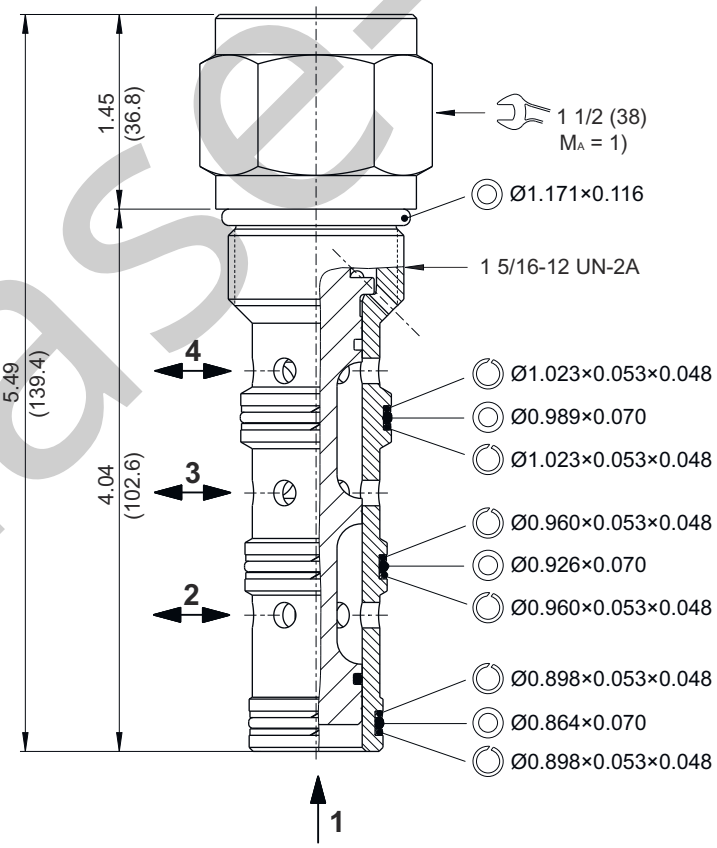

Phase-Out

Installation information

ATTENTION!
Only qualified personnel with mechanical skills may carry out any maintenance work. Generally, the only work that should ever be undertaken is to check, and possibly replace, the seals. When changing seals, oil or grease the new seals thoroughly before fitting them.

NOTE!
1) When fitting the screw-in cartridge valve, use the specified tightening torque. The value can be found in the chapter "Technical data".

NOTE!
The seals are not available individually. The seal kit order number can be found in the chapter "Technical data".

Ordering code

e.g. DCPS - 16 - N - D - F - 0 - 060

DCPS	= directional control valve, direct acting, cartridge design
16	= nominal size SAE 16 / NG 12
N	= NBR (nitril-butadien-rubber / BUNA) seals *(standard)*
V	= FKM (fluorocarbon rubber / VITON) seals *(special seals - please consult BUCHER)*
D	= spool type "D"
F	= fixed (factory set)
0	= screw-in cartridge only
12TA	= line-mounting body aluminum SAE #12 ports
12TS	= line-mounting body steel SAE #12 ports
16TA	= line-mounting body aluminum SAE #16 ports
16TS	= line-mounting body steel SAE #16 ports
060	= pressure setting bias spring 60 psi
120	= pressure setting bias spring 120 psi
160	= pressure setting bias spring 160 psi

Related data sheets

Reference	Description
520-P-000050	Form tools
520-P-000440	Cavity C1640
520-P-000441	Threaded port body B1640

Phase-Out

info.us@bucherhydraulics.com www.bucherhydraulics.com

© 2025 by Bucher Hydraulics Inc., Elgin, IL 60124, USA

All rights reserved.
Data is provided for the purpose of product description only, and must not be construed as warranted characteristics in the legal sense. The information does not relieve users from the duty of conducting their own evaluations and tests. Because the products are subject to continual improvement, we reserve the right to amend the product specifications contained in this catalogue.

BUCHER hydraulics
WWW.SUMY.IR

Directional valve 3-way/2-position

Q_{max} = 136 l/min, p_{max} = 350 bar
direct acting, spool type, hydraulical operation
Type series: DCPS-16-_-E-...

- Screw-in cartridge valve
- For cavity C1640
- All external parts zinc plated, chromited (CrVI-free)
- Installation in threaded port body type B1640
- Hardened precision fitted spool and sleeve provides reliable, long life
- Open center transition
- The spring chamber is vented (V) to atmosphere
- A unibody cage construction provides very low hysteresis, dependable and reliable operation

Description

This unit is a direct acting, screw-in cartridge style, spool type, hydraulic 3-way directional control element, requiring remote pilot actuation. This valve allows flow from port 3 to port 2 with a spring biased spool. Port 4 is blocked. The spool will shift when piloted at port 1 with sufficient pressure to overcome the spring bias and allow flow from port 3 to port 4. "V" spring chamber is vented to atmosphere. This valve shifts in an open center position.

Symbol

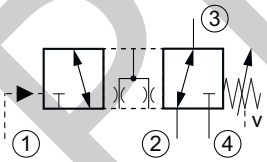

Technical data

General characteristics	Description, value, unit
Product status	Phase-Out
Function group	Directional valve
Function	3-way/2-position
Design	Screw-in cartridge valve
Controls	hydraulical operation

Phase-Out

WWW.SUMY.IR

General characteristics	Description, value, unit
Characteristic	direct acting, spool type
Transition/central position of spool/piston	zero or underlap/negative (open)
Construction size	NG 12 / SAE 16
Thread size	1 5/16-12 UN-2A
Mounting attitude	unrestricted
Weight	0.68 kg
Cavity acc. factory standard	For cavity C1640
Tightening torque steel	132.5 Nm
Tightening torque aluminium	98.5 Nm
Tightening torque tolerance	± 5 %
Minimum ambient temperature	- 40 °C
Maximum ambient temperature	+ 120 °C
Surface protection	All external parts zinc plated, chromited (CrVI-free)
Sealing material	see ordering code
Seal kit order number	NBR: SKN-1640 / FKM: SKV-1640

Hydraulic characteristics	Description, value, unit
Maximum operating pressure	350 bar
Maximum flow rate	136 l/min
Flow direction	see symbol
Hydraulic fluid	All general purpose hydraulic fluids such as MIL-H-5606, SAE-#10, SAE-#20, etc.
Minimum fluid temperature	- 25 °C
Maximum fluid temperature	+ 80 °C
Viscosity range	10 ... 500 mm^2/s (cSt)
Recommended viscosity range	20 ... 130 mm^2/s (cSt)
Minimum fluid cleanliness (cleanlineless class according to ISO 4406:1999)	class 18/16/13
Minimum set pressure	4 bar
Maximum set pressure	11 bar
Internal leakage flow rate	82 cc/min at 350 bar
Pilot operating media	hydraulic fluid

Phase-Out

BUCHER hydraulics
WWW.SUMY.IR

Performance graphs

measured with oil viscosity 28.5 mm²/s (cSt)

Δp = f (Q) Pressure drop-flow rate characteristic

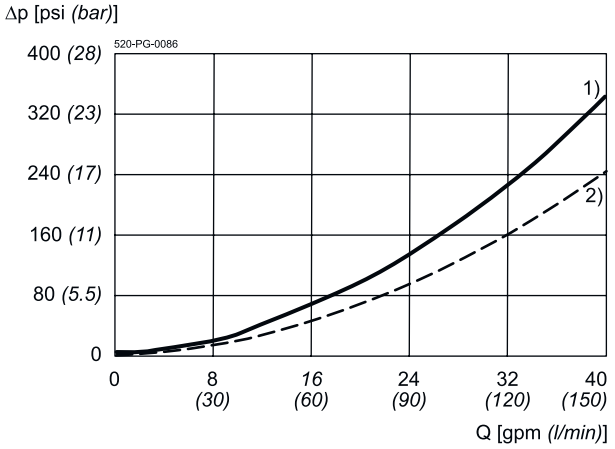

1) = 3 → 2
2) = 3 → 4

Dimensions and sectional view

Beispiel für die Masseinheit:
Example for the dimensional units:

.031	= 0.031"	inch
(0.79)	= 0.79 mm	millimeter

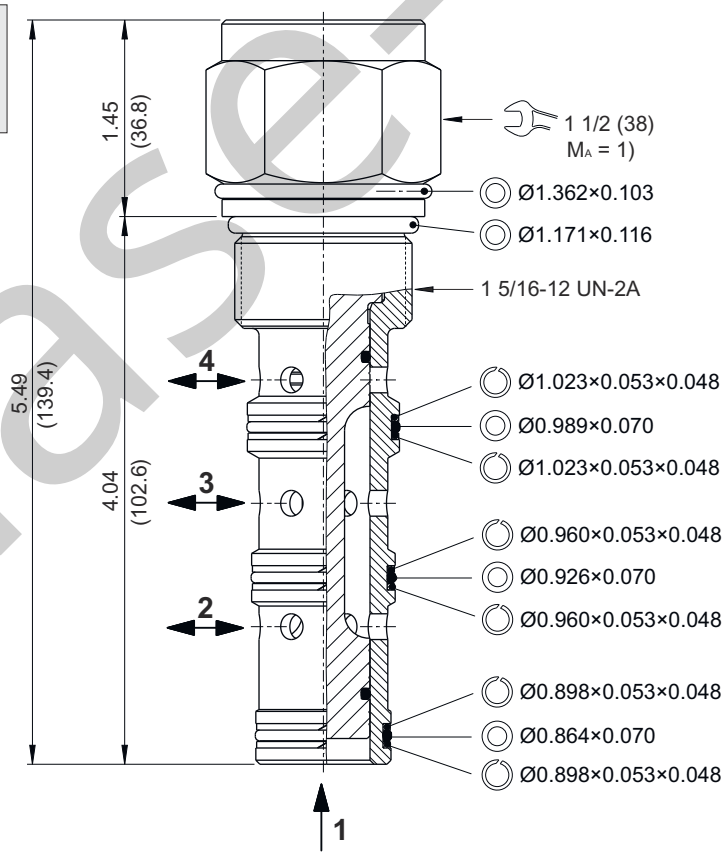

Phase-Out

Installation information

ATTENTION!
Only qualified personnel with mechanical skills may carry out any maintenance work. Generally, the only work that should ever be undertaken is to check, and possibly replace, the seals. When changing seals, oil or grease the new seals thoroughly before fitting them.

NOTE!
1) When fitting the screw-in cartridge valve, use the specified tightening torque. The value can be found in the chapter "Technical data".

NOTE!
The seals are not available individually. The seal kit order number can be found in the chapter "Technical data".

Ordering code

e.g. DCPS - 16 - N - E - F - 0 - 060

DCPS	= directional control valve, direct acting, cartridge design
16	= nominal size SAE 16 / NG 12
N	= NBR (nitril-butadien-rubber / BUNA) seals *(standard)*
V	= FKM (fluorocarbon rubber / VITON) seals *(special seals - please consult BUCHER)*
E	= spool type "E"
F	= fixed (factory set)
0	= screw-in cartridge only
12TA	= line-mounting body aluminum SAE #12 ports
12TS	= line-mounting body steel SAE #12 ports
16TA	= line-mounting body aluminum SAE #16 ports
16TS	= line-mounting body steel SAE #16 ports
060	= pressure setting bias spring 60 psi
120	= pressure setting bias spring 120 psi
160	= pressure setting bias spring 160 psi

Related data sheets

Reference	Description
520-P-000050	Form tools
520-P-000440	Cavity C1640
520-P-000441	Threaded port body B1640

Phase-Out

info.us@bucherhydraulics.com **www.bucherhydraulics.com**

© 2025 by Bucher Hydraulics Inc., Elgin, IL 60124, USA

All rights reserved.
Data is provided for the purpose of product description only, and must not be construed as warranted characteristics in the legal sense. The information does not relieve users from the duty of conducting their own evaluations and tests. Because the products are subject to continual improvement, we reserve the right to amend the product specifications contained in this catalogue.

BUCHER hydraulics
WWW.SUMY.IR

Directional valve 3-way/2-position

Q_{max} = 136 l/min, p_{max} = 350 bar
direct acting, spool type, hydraulical operation
Type series: DCPS-16-_-F-...

- Screw-in cartridge valve
- For cavity C1640
- All external parts zinc plated, chromited (CrVI-free)
- Installation in threaded port body type B1640
- Hardened precision fitted spool and sleeve provides reliable, long life
- Closed center transition
- The spring chamber is vented (V) to atmosphere
- A unibody cage construction provides very low hysteresis, dependable and reliable operation

Description

This unit is a direct acting, screw-in cartridge style, spool type, hydraulic 3-way directional control element, requiring remote pilot actuation. This valve allows flow from port 3 to port 2 with a spring biased spool. Port 4 is blocked. The spool will shift when piloted at port 1 with sufficient pressure to overcome the spring bias and allow flow from port 3 to port 4. "V" spring chamber is vented to atmosphere. This valve shifts in a closed center position.

Symbol

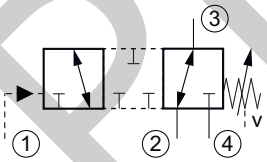

Technical data

General characteristics	Description, value, unit
Product status	Phase-Out
Function group	Directional valve
Function	3-way/2-position
Design	Screw-in cartridge valve
Controls	hydraulical operation

Phase-Out

WWW.SUMY.IR

General characteristics	Description, value, unit
Characteristic	direct acting, spool type
Transition/central position of spool/piston	zero or overlap/positive (closed)
Construction size	NG 12 / SAE 16
Thread size	1 5/16-12 UN-2A
Mounting attitude	unrestricted
Weight	0.68 kg
Cavity acc. factory standard	For cavity C1640
Tightening torque steel	132.5 Nm
Tightening torque aluminium	98.5 Nm
Tightening torque tolerance	± 5 %
Minimum ambient temperature	- 40 °C
Maximum ambient temperature	+ 120 °C
Surface protection	All external parts zinc plated, chromited (CrVI-free)
Sealing material	see ordering code
Seal kit order number	NBR: SKN-1640 / FKM: SKV-1640

Hydraulic characteristics	Description, value, unit
Maximum operating pressure	350 bar
Maximum flow rate	136 l/min
Flow direction	see symbol
Hydraulic fluid	All general purpose hydraulic fluids such as MIL-H-5606, SAE-#10, SAE-#20, etc.
Minimum fluid temperature	- 25 °C
Maximum fluid temperature	+ 80 °C
Viscosity range	10 ... 500 mm^2/s (cSt)
Recommended viscosity range	20 ... 130 mm^2/s (cSt)
Minimum fluid cleanliness (cleanlineless class according to ISO 4406:1999)	class 18/16/13
Minimum set pressure	4 bar
Maximum set pressure	11 bar
Internal leakage flow rate	82 cc/min at 350 bar
Pilot operating media	hydraulic fluid

Phase-Out

BUCHER hydraulics
WWW.SUMY.IR

Performance graphs

measured with oil viscosity 28.5 mm²/s (cSt)

Δp = f (Q) Pressure drop-flow rate characteristic

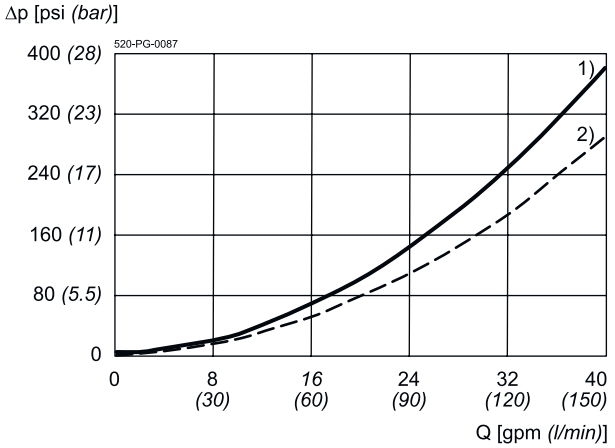

1) = 3 → 2
2) = 3 → 4

Dimensions and sectional view

Beispiel für die Masseinheit:
Example for the dimensional units:

.031	= 0.031"	inch
(0.79)	= 0.79 mm	millimeter

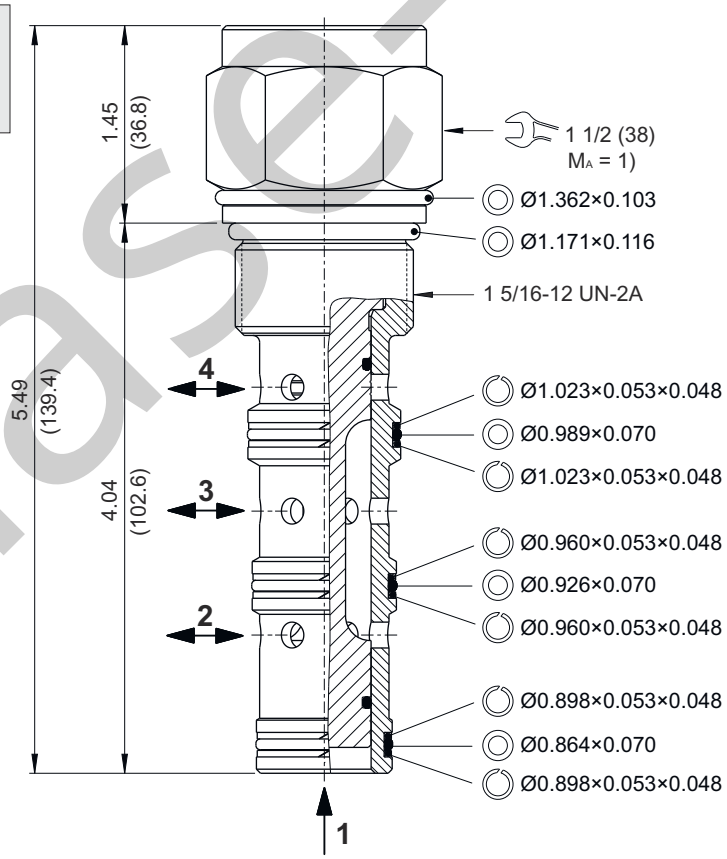

Phase-Out

Installation information

ATTENTION!
Only qualified personnel with mechanical skills may carry out any maintenance work. Generally, the only work that should ever be undertaken is to check, and possibly replace, the seals. When changing seals, oil or grease the new seals thoroughly before fitting them.

NOTE!
1) When fitting the screw-in cartridge valve, use the specified tightening torque. The value can be found in the chapter "Technical data".

NOTE!
The seals are not available individually. The seal kit order number can be found in the chapter "Technical data".

Ordering code

e.g. DCPS - 16 - N - F - F - 0 - 060

DCPS	= directional control valve, direct acting, cartridge design
16	= nominal size SAE 16 / NG 12
N	= NBR (nitril-butadien-rubber / BUNA) seals *(standard)*
V	= FKM (fluorocarbon rubber / VITON) seals *(special seals - please consult BUCHER)*
F	= spool type "F"
F	= fixed (factory set)
0	= screw-in cartridge only
12TA	= line-mounting body aluminum SAE #12 ports
12TS	= line-mounting body steel SAE #12 ports
16TA	= line-mounting body aluminum SAE #16 ports
16TS	= line-mounting body steel SAE #16 ports
060	= pressure setting bias spring 60 psi
120	= pressure setting bias spring 120 psi
160	= pressure setting bias spring 160 psi

Related data sheets

Reference	Description
520-P-000050	Form tools
520-P-000440	Cavity C1640
520-P-000441	Threaded port body B1640

Phase-Out

info.us@bucherhydraulics.com www.bucherhydraulics.com

© 2025 by Bucher Hydraulics Inc., Elgin, IL 60124, USA

All rights reserved.
Data is provided for the purpose of product description only, and must not be construed as warranted characteristics in the legal sense. The information does not relieve users from the duty of conducting their own evaluations and tests. Because the products are subject to continual improvement, we reserve the right to amend the product specifications contained in this catalogue.

BUCHER hydraulics
WWW.SUMY.IR

Directional valve 3-way/2-position

Q_{max} = 136 l/min, p_{max} = 350 bar
direct acting, spool type, hydraulical operation
Type series: DCPS-16-_-G-...

- Screw-in cartridge valve
- For cavity C1640
- All external parts zinc plated, chromited (CrVI-free)
- Installation in threaded port body type B1640
- Hardened precision fitted spool and sleeve provides reliable, long life
- Open center transition
- The spring chamber is vented (V) to atmosphere
- A unibody cage construction provides very low hysteresis, dependable and reliable operation

Description

This unit is a direct acting, screw-in cartridge style, spool type, hydraulic 3-way directional control element, requiring remote pilot actuation. This valve allows flow from port 3 to port 4 with a spring biased spool. Port 2 is blocked. The spool will shift when piloted at port 1 with sufficient pressure to overcome the spring bias and allow flow from port 3 to port 2. "V" spring chamber is vented to atmosphere. This valve shifts in an open center position.

Symbol

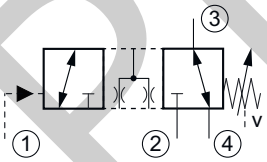

Technical data

General characteristics	Description, value, unit
Product status	Phase-Out
Function group	Directional valve
Function	3-way/2-position
Design	Screw-in cartridge valve
Controls	hydraulical operation

Phase-Out

WWW.SUMY.IR

General characteristics	Description, value, unit
Characteristic	direct acting, spool type
Transition/central position of spool/piston	zero or underlap/negative (open)
Construction size	NG 12 / SAE 16
Thread size	1 5/16-12 UN-2A
Mounting attitude	unrestricted
Weight	0.68 kg
Cavity acc. factory standard	For cavity C1640
Tightening torque steel	132.5 Nm
Tightening torque aluminium	98.5 Nm
Tightening torque tolerance	± 5 %
Minimum ambient temperature	- 40 °C
Maximum ambient temperature	+ 120 °C
Surface protection	All external parts zinc plated, chromited (CrVI-free)
Sealing material	see ordering code
Seal kit order number	NBR: SKN-1640 / FKM: SKV-1640

Hydraulic characteristics	Description, value, unit
Maximum operating pressure	350 bar
Maximum flow rate	136 l/min
Flow direction	see symbol
Hydraulic fluid	All general purpose hydraulic fluids such as MIL-H-5606, SAE-#10, SAE-#20, etc.
Minimum fluid temperature	- 25 °C
Maximum fluid temperature	+ 80 °C
Viscosity range	10 ... 500 mm^2/s (cSt)
Recommended viscosity range	20 ... 130 mm^2/s (cSt)
Minimum fluid cleanliness (cleanlineless class according to ISO 4406:1999)	class 18/16/13
Minimum set pressure	4 bar
Maximum set pressure	11 bar
Internal leakage flow rate	82 cc/min at 350 bar
Pilot operating media	hydraulic fluid

Phase-Out

Performance graphs

measured with oil viscosity 28.5 mm²/s (cSt)

Δp = f (Q) Pressure drop-flow rate characteristic

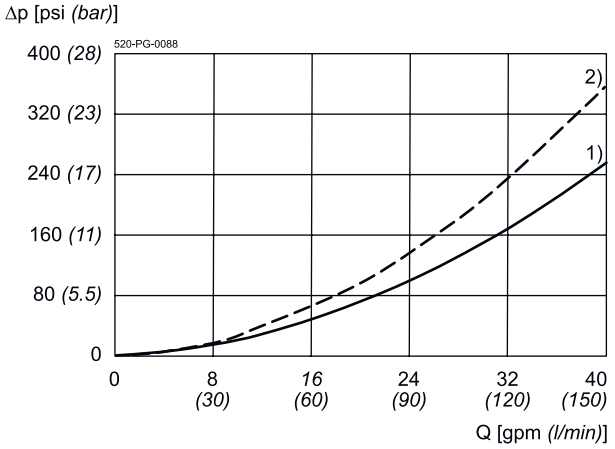

1) = 3 → 4
2) = 3 → 2

Dimensions and sectional view

Beispiel für die Masseinheit:
Example for the dimensional units:

.031	= 0.031"	inch
(0.79)	= 0.79 mm	millimeter

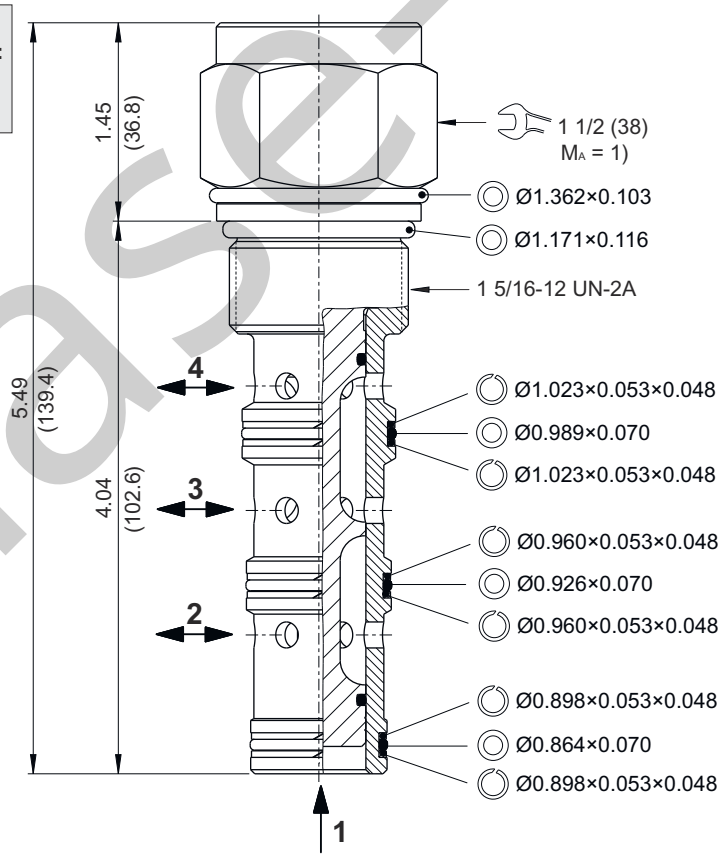

Phase-Out

Installation information

ATTENTION!
Only qualified personnel with mechanical skills may carry out any maintenance work. Generally, the only work that should ever be undertaken is to check, and possibly replace, the seals. When changing seals, oil or grease the new seals thoroughly before fitting them.

NOTE!
1) When fitting the screw-in cartridge valve, use the specified tightening torque. The value can be found in the chapter "Technical data".

NOTE!
The seals are not available individually. The seal kit order number can be found in the chapter "Technical data".

Ordering code

e.g. DCPS - 16 - N - G - F - 0 - 060

DCPS	= directional control valve, direct acting, cartridge design
16	= nominal size SAE 16 / NG 12
N	= NBR (nitril-butadien-rubber / BUNA) seals *(standard)*
V	= FKM (fluorocarbon rubber / VITON) seals *(special seals - please consult BUCHER)*
G	= spool type "G"
F	= fixed (factory set)
0	= screw-in cartridge only
12TA	= line-mounting body aluminum SAE #12 ports
12TS	= line-mounting body steel SAE #12 ports
16TA	= line-mounting body aluminum SAE #16 ports
16TS	= line-mounting body steel SAE #16 ports
060	= pressure setting bias spring 60 psi
120	= pressure setting bias spring 120 psi
160	= pressure setting bias spring 160 psi

Related data sheets

Reference	Description
520-P-000050	Form tools
520-P-000440	Cavity C1640
520-P-000441	Threaded port body B1640

Phase-Out

info.us@bucherhydraulics.com www.bucherhydraulics.com

© 2025 by Bucher Hydraulics Inc., Elgin, IL 60124, USA

All rights reserved.
Data is provided for the purpose of product description only, and must not be construed as warranted characteristics in the legal sense. The information does not relieve users from the duty of conducting their own evaluations and tests. Because the products are subject to continual improvement, we reserve the right to amend the product specifications contained in this catalogue.

BUCHER hydraulics
WWW.SUMY.IR

Directional valve 3-way/2-position

Q_{max} = 136 l/min, p_{max} = 350 bar
direct acting, spool type, hydraulical operation
Type series: DCPS-16-_-H-...

- Screw-in cartridge valve
- For cavity C1640
- All external parts zinc plated, chromited (CrVI-free)
- Installation in threaded port body type B1640
- Hardened precision fitted spool and sleeve provides reliable, long life
- Closed center transition
- The spring chamber is vented (V) to atmosphere
- A unibody cage construction provides very low hysteresis, dependable and reliable operation

Description

This unit is a direct acting, screw-in cartridge style, spool type, hydraulic 3-way directional control element, requiring remote pilot actuation. This valve allows flow from port 3 to port 4 with a spring biased spool. Port 2 is blocked. The spool will shift when piloted at port 1 with sufficient pressure to overcome the spring bias and allow flow from port 3 to port 2. "V" spring chamber is vented to atmosphere. This valve shifts in a closed center position.

Symbol

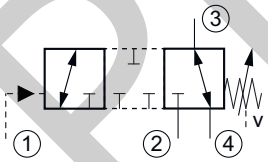

Technical data

General characteristics	Description, value, unit
Product status	Phase-Out
Function group	Directional valve
Function	3-way/2-position
Design	Screw-in cartridge valve
Controls	hydraulical operation

Phase-Out

WWW.SUMY.IR

General characteristics	Description, value, unit
Characteristic	direct acting, spool type
Transition/central position of spool/piston	zero or overlap/positive (closed)
Construction size	NG 12 / SAE 16
Thread size	1 5/16-12 UN-2A
Mounting attitude	unrestricted
Weight	0.68 kg
Cavity acc. factory standard	For cavity C1640
Tightening torque steel	132.5 Nm
Tightening torque aluminium	98.5 Nm
Tightening torque tolerance	± 5 %
Minimum ambient temperature	- 40 °C
Maximum ambient temperature	+ 120 °C
Surface protection	All external parts zinc plated, chromited (CrVI-free)
Sealing material	see ordering code
Seal kit order number	NBR: SKN-1640 / FKM: SKV-1640

Hydraulic characteristics	Description, value, unit
Maximum operating pressure	350 bar
Maximum flow rate	136 l/min
Flow direction	see symbol
Hydraulic fluid	All general purpose hydraulic fluids such as MIL-H-5606, SAE-#10, SAE-#20, etc.
Minimum fluid temperature	- 25 °C
Maximum fluid temperature	+ 80 °C
Viscosity range	10 ... 500 mm^2/s (cSt)
Recommended viscosity range	20 ... 130 mm^2/s (cSt)
Minimum fluid cleanliness (cleanlineless class according to ISO 4406:1999)	class 18/16/13
Minimum set pressure	4 bar
Maximum set pressure	11 bar
Internal leakage flow rate	82 cc/min at 350 bar
Pilot operating media	hydraulic fluid

Phase-Out

BUCHER hydraulics
WWW.SUMY.IR

Performance graphs

measured with oil viscosity 28.5 mm²/s (cSt)

Δp = f (Q) Pressure drop-flow rate characteristic

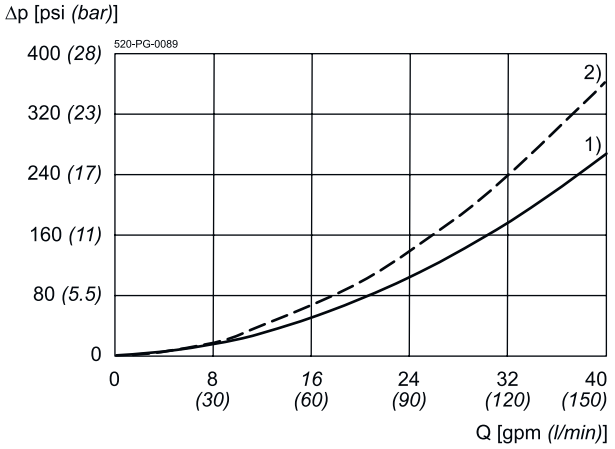

1) = 3 → 4
2) = 3 → 2

Dimensions and sectional view

Beispiel für die Masseinheit:
Example for the dimensional units:

.031	= 0.031"	inch
(0.79)	= 0.79 mm	millimeter

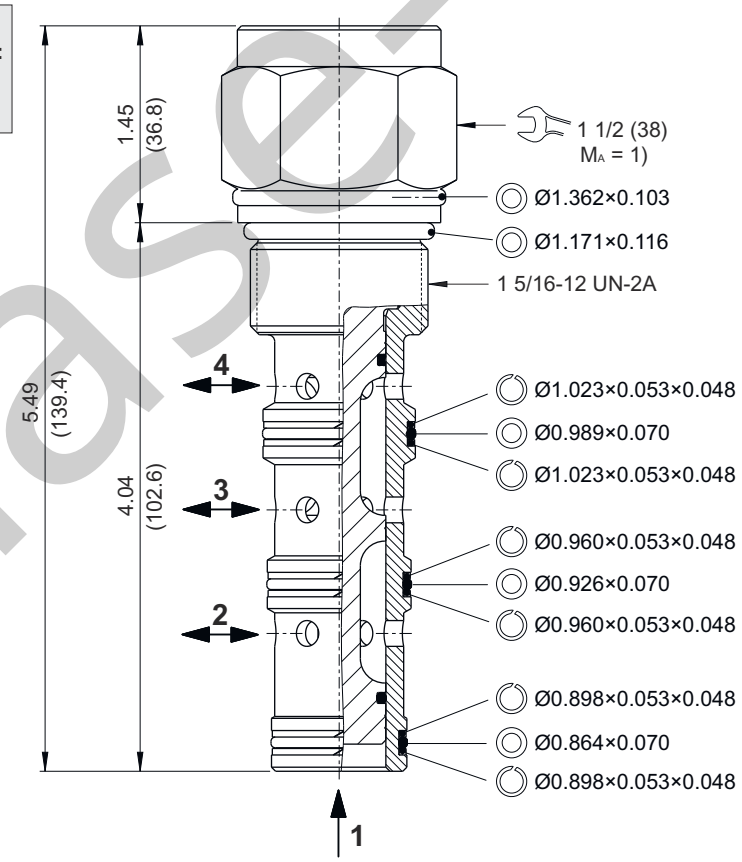

Phase-Out

Installation information

ATTENTION!
Only qualified personnel with mechanical skills may carry out any maintenance work. Generally, the only work that should ever be undertaken is to check, and possibly replace, the seals. When changing seals, oil or grease the new seals thoroughly before fitting them.

NOTE!
1) When fitting the screw-in cartridge valve, use the specified tightening torque. The value can be found in the chapter "Technical data".

NOTE!
The seals are not available individually. The seal kit order number can be found in the chapter "Technical data".

Ordering code

e.g. DCPS - 16 - N - H - F - 0 - 060

DCPS	= directional control valve, direct acting, cartridge design
16	= nominal size SAE 16 / NG 12
N	= NBR (nitril-butadien-rubber / BUNA) seals *(standard)*
V	= FKM (fluorocarbon rubber / VITON) seals *(special seals - please consult BUCHER)*
H	= spool type "H"
F	= fixed (factory set)
0	= screw-in cartridge only
12TA	= line-mounting body aluminum SAE #12 ports
12TS	= line-mounting body steel SAE #12 ports
16TA	= line-mounting body aluminum SAE #16 ports
16TS	= line-mounting body steel SAE #16 ports
060	= pressure setting bias spring 60 psi
120	= pressure setting bias spring 120 psi
160	= pressure setting bias spring 160 psi

Related data sheets

Reference	Description
520-P-000050	Form tools
520-P-000440	Cavity C1640
520-P-000441	Threaded port body B1640

Phase-Out

info.us@bucherhydraulics.com www.bucherhydraulics.com

© 2025 by Bucher Hydraulics Inc., Elgin, IL 60124, USA

All rights reserved.
Data is provided for the purpose of product description only, and must not be construed as warranted characteristics in the legal sense. The information does not relieve users from the duty of conducting their own evaluations and tests. Because the products are subject to continual improvement, we reserve the right to amend the product specifications contained in this catalogue.

BUCHER hydraulics

WWW.SUMY.IR

Directional valve 3-way/2-position

Q_{max} = 30 l/min, p_{max} = 350 bar
direct acting, spool type, pneumatical or hydraulical operation
Type series: AODV-10-_-3A-...

- Screw-in cartridge valve
- For cavity C1030
- All external parts zinc plated, chromited (CrVI-free)
- Installation in threaded port body type B1030
- Hardened precision fitted spool and sleeve provides reliable, long life
- Closed center transition
- The non-corrosive piston assembly allows this valve to operate by air or any type of hydraulic fluid
- Control spool is isolated from hydraulic fluid with high pressure seals

Description

This unit is a three-way, two-position, screw-in cartridge style, direct acting, spool type, air or hydraulic operated, spring return, hydraulic directional control valve. When pilot piston is not actuated, this valve allows flow between ports 2 to 1 and port 3 is blocked.When pilot piston is pressurized, the spool in this valve is shifted and allows flow between ports 3 to 2 and port 1 is blocked. This valve shifts in a closed center position. Port 1 can be pressurized to 18.5 × pilot port pressure.

Symbol

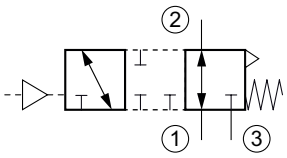

operated by air

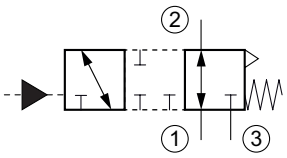

operated by hydraulic fluid

Technical data

General Characteristics	Description, value, unit
Function group	Directional valve
Function	3-way/2-position
Design	Screw-in cartridge valve
Controls	pneumatical or hydraulical operation
Characteristic	direct acting, spool type
Transition/central position of spool/piston	zero or positive overlap (closed)
Construction size	SAE 10 / nominal size 8
Thread size	7/8-14 UNF-2A
Mounting attitude	unrestricted
Weight	0.29 kg
Cavity acc. factory standard	For cavity C1030
Tightening torque steel	77.5 Nm
Tightening torque aluminium	50.5 Nm
Tightening torque tolerance	± 5 %
Minimum ambient temperature	- 40 °C
Maximum ambient temperature	+ 120 °C
Surface protection	All external parts zinc plated, chromited (CrVI-free)
Available seal types	several seal types available, see ordering code
Seal kit order number	NBR: SKN-1032 / FKM: SKV-1032

Hydraulic Characteristics	Description, value, unit
Maximum operating pressure	350 bar
Maximum flow rate	30 l/min
Flow direction	see symbol
Hydraulic fluid	All general purpose hydraulic fluids such as MIL-H-5606, SAE-#10, SAE-#20, etc.
Minimum fluid temperature	- 25 °C
Maximum fluid temperature	+ 80 °C
Viscosity range	10 ... 500 mm^2/s (cSt)
Recommended viscosity range	20 ... 130 mm^2/s (cSt)
Minimum fluid cleanliness (cleanlineless class according to ISO 4406:1999)	class 18/16/13
Pilot piston area ratio to system pressure area	18.5:1
Internal leakage flow rate	82 cc/min at 350 bar
Pilot operating media	air or hydraulic fluid
Pilot pressure	pneumatical: 3.5 ... 17.5 bar / hydraulical: 3.5 ... 70 bar

Performance graphs

measured with oil viscosity 28.5 mm²/s (cSt)

Δp = f (Q) Pressure drop-flow rate characteristic

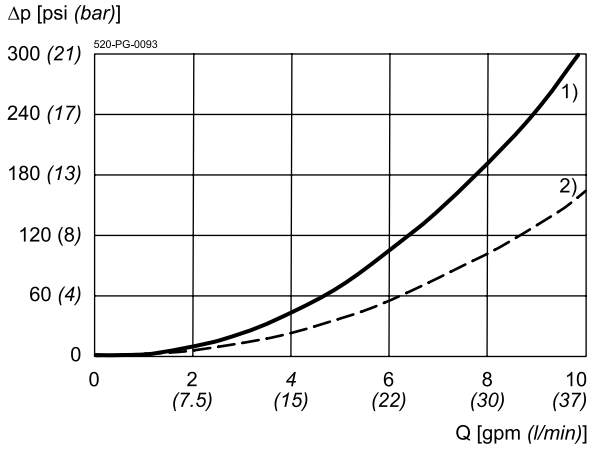

1) = 2 → 1
2) = 3 → 2

Dimensions and sectional view

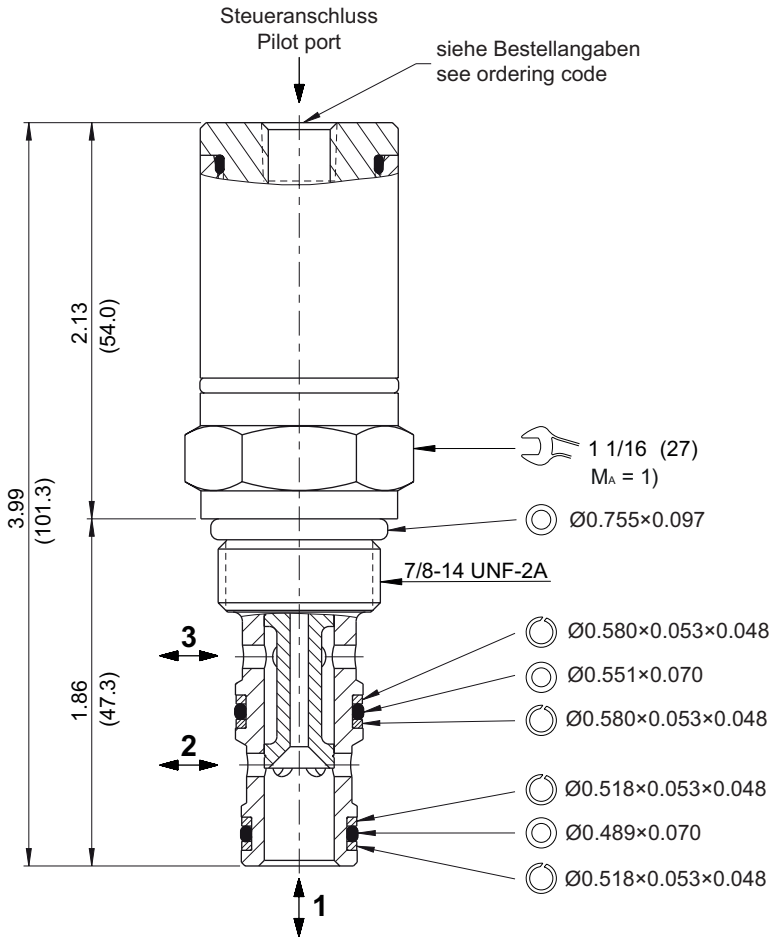

Installation information

ATTENTION!
Only qualified personnel with mechanical skills may carry out any maintenance work. Generally, the only work that should ever be undertaken is to check, and possibly replace, the seals. When changing seals, oil or grease the new seals thoroughly before fitting them.

NOTE!
The seals are not available individually. The seal kit order number can be found in the chapter "Technical data".

NOTE!
1) When fitting the screw-in cartridge valve, use the specified tightening torque. The value can be found in the chapter "Technical data".

Ordering code

e.g. AODV - 10 - N - 3A - 0 - 1P

AODV = air or hydraulic operated directional control valve
10 = nominal size SAE 10 / NG 8
N = NBR (nitril-butadien-rubber / BUNA) seals *(standard)*
V = FKM (fluorocarbon rubber / VITON) seals
(special seals - please consult BUCHER)
3A = spool type A (3-way/2-position)
0 = screw-in cartridge only
06TA = line-mounting body aluminum SAE #06 ports
06TS = line-mounting body steel SAE #06 ports
08TA = line-mounting body aluminum SAE #08 ports
08TS = line-mounting body steel SAE #08 ports
1P = pilot port 1/8" NPTF
1B = pilot port G 1/8" BSPP
4T = pilot port SAE #4

Related data sheets

Reference	Description
520-P-000050	Form tools
520-P-000320	Cavity C1030
520-P-000321	Threaded port body B1030

info.us@bucherhydraulics.com www.bucherhydraulics.com

© 2022 by Bucher Hydraulics Inc., Elgin, IL 60124, USA

All rights reserved.
Data is provided for the purpose of product description only, and must not be construed as warranted characteristics in the legal sense. The information does not relieve users from the duty of conducting their own evaluations and tests. Because the products are subject to continual improvement, we reserve the right to amend the product specifications contained in this catalogue.

BUCHER hydraulics
WWW.SUMY.IR

Directional valve 3-way/2-position

Q_{max} = 30 l/min, p_{max} = 350 bar
direct acting, spool type, pneumatical or hydraulical operation
Type series: AODV-10-_-3B-...

- Screw-in cartridge valve
- For cavity C1030
- All external parts zinc plated, chromited (CrVI-free)
- Installation in threaded port body type B1030
- Hardened precision fitted spool and sleeve provides reliable, long life
- Closed center transition
- The non-corrosive piston assembly allows this valve to operate by air or any type of hydraulic fluid
- Control spool is isolated from hydraulic fluid with high pressure seals

Description

This unit is a three-way, two position, screw-in cartridge style, direct acting spool type, air or hydraulically operated, spring return, hydraulic directional control valve. When pilot piston is not actuated, this valve allows flow between ports 2 to 1 and port 3 is blocked. When pilot piston is pressurized, the spool in this valve is shifted and allows flow between ports 3 to 1 and port 2 is blocked. This valve shifts in a closed center position. Port 1 can be pressurized to 18.5 x pilot port pressure.

Symbol

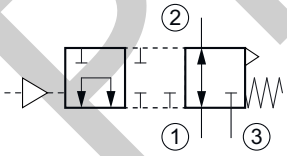

operated by air

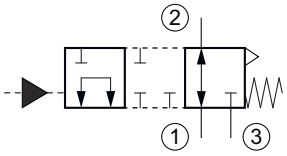

operated by hydraulic fluid

Technical data

General characteristics	Description, value, unit
Product status	Phase-Out
Function group	Directional valve
Function	3-way/2-position

Phase-Out

WWW.SUMY.IR

General characteristics	Description, value, unit
Design	Screw-in cartridge valve
Controls	pneumatical or hydraulical operation
Characteristic	direct acting, spool type
Transition/central position of spool/piston	zero or overlap/positive (closed)
Construction size	NG 8 / SAE 10
Thread size	7/8-14 UNF-2A
Mounting attitude	unrestricted
Weight	0.26 kg
Cavity acc. factory standard	For cavity C1030
Tightening torque steel	77.5 Nm
Tightening torque aluminium	50.5 Nm
Tightening torque tolerance	± 5 %
Minimum ambient temperature	- 40 °C
Maximum ambient temperature	+ 120 °C
Surface protection	All external parts zinc plated, chromited (CrVI-free)
Sealing material	see ordering code
Seal kit order number	NBR: SKN-1032 / FKM: SKV-1032

Hydraulic characteristics	Description, value, unit
Maximum operating pressure	350 bar
Maximum flow rate	30 l/min
Flow direction	see symbol
Hydraulic fluid	All general purpose hydraulic fluids such as MIL-H-5606, SAE-#10, SAE-#20, etc.
Minimum fluid temperature	- 25 °C
Maximum fluid temperature	+ 80 °C
Viscosity range	10 ... 500 mm^2/s (cSt)
Recommended viscosity range	20 ... 130 mm^2/s (cSt)
Minimum fluid cleanliness (cleanlineless class according to ISO 4406:1999)	class 18/16/13
Pilot piston area ratio to system pressure area	18.5:1
Internal leakage flow rate	82 cc/min at 350 bar
Pilot operating media	compressed air or hydraulic fluid
Pilot pressure	pneumatical: 3.5 ... 17.5 bar / hydraulical: 3.5 ... 70 bar

Phase-Out

BUCHER
hydraulics
WWW.SUMY.IR

Performance graphs

measured with oil viscosity 28.5 mm²/s (cSt)

Δp = f (Q) Pressure drop-flow rate characteristic

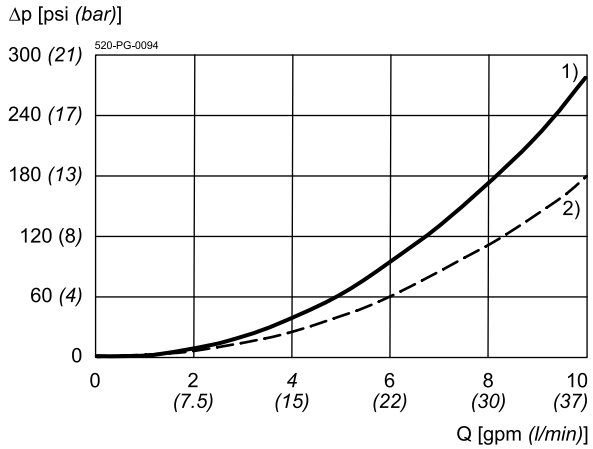

1) = 2 → 1
2) = 3 → 1

Phase-Out

Dimensions and sectional view

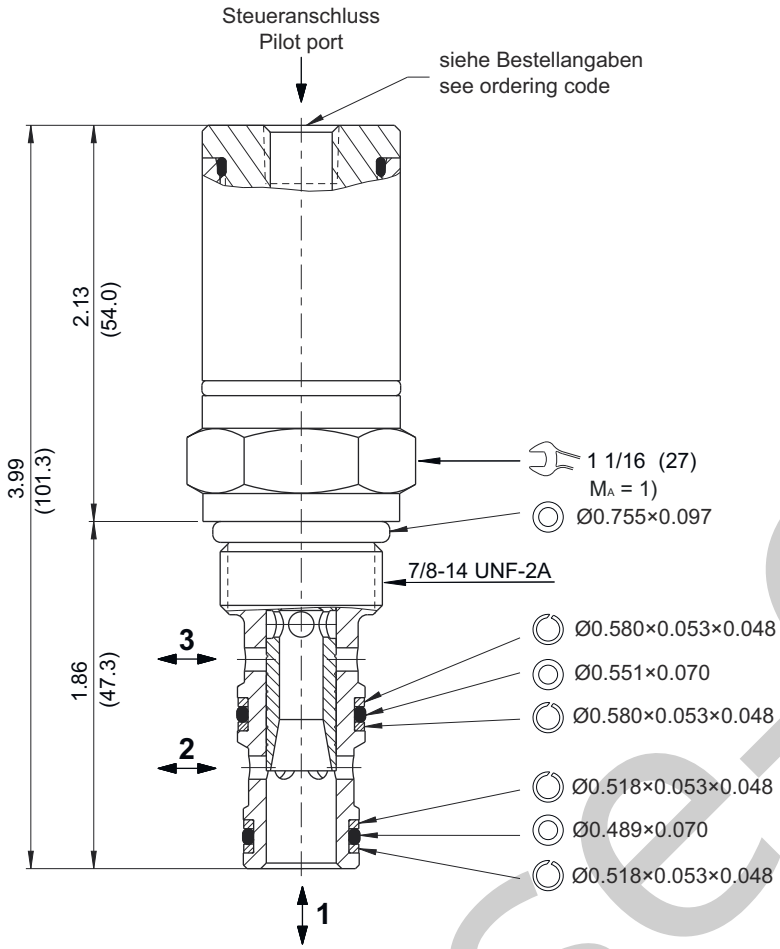

Installation information

ATTENTION!
Only qualified personnel with mechanical skills may carry out any maintenance work. Generally, the only work that should ever be undertaken is to check, and possibly replace, the seals. When changing seals, oil or grease the new seals thoroughly before fitting them.

NOTE!
1) When fitting the screw-in cartridge valve, use the specified tightening torque. The value can be found in the chapter "Technical data".

NOTE!
The seals are not available individually. The seal kit order number can be found in the chapter "Technical data".

Phase-Out

Ordering code

e.g. AODV - 10 - N - 3B - 0 - 4T

AODV = air or hydraulic operated directional control valve

10 = nominal size SAE 10 / NG 8

N = NBR (nitril-butadien-rubber / BUNA) seals *(standard)*
V = FKM (fluorocarbon rubber / VITON) seals
(special seals - please consult BUCHER)

3B = spool type B (3-way/2-position)

0 = screw-in cartridge only
06TA = line-mounting body aluminum SAE #06 ports
06TS = line-mounting body steel SAE #06 ports
08TA = line-mounting body aluminum SAE #08 ports
08TS = line-mounting body steel SAE #08 ports

1P = pilot port 1/8“ NPTF
1B = pilot port G 1/8“ BSPP
4T = pilot port SAE #4

Related data sheets

Reference	Description
520-P-000050	Form tools
520-P-000320	Cavity C1030
520-P-000321	Threaded port body B1030

Phase-Out

info.us@bucherhydraulics.com www.bucherhydraulics.com

© 2025 by Bucher Hydraulics Inc., Elgin, IL 60124, USA

All rights reserved.
Data is provided for the purpose of product description only, and must not be construed as warranted characteristics in the legal sense. The information does not relieve users from the duty of conducting their own evaluations and tests. Because the products are subject to continual improvement, we reserve the right to amend the product specifications contained in this catalogue.

BUCHER hydraulics
WWW.SUMY.IR

Directional valve 3-way/2-position

Q_{max} = 30 l/min, p_{max} = 350 bar
direct acting, spool type, pneumatical or hydraulical operation
Type series: AODV-10-_-3C-...

- Screw-in cartridge valve
- For cavity C1030
- All external parts zinc plated, chromited (CrVI-free)
- Installation in threaded port body type B1030
- Hardened precision fitted spool and sleeve provides reliable, long life
- Open center transition
- The non-corrosive piston assembly allows this valve to operate by air or any type of hydraulic fluid
- Control spool is isolated from hydraulic fluid with high pressure seals

Description

This unit is a three-way, two position, screw-in cartridge style, direct acting spool type, air or hydraulically operated, spring return, hydraulic directional control valve. When pilot piston is not actuated, this valve allows flow between ports 2 to 1 and port 3 is blocked. When pilot piston is pressurized, the spool in this valve is shifted and allows flow between ports 3 to 2 and port 1 is blocked. This valve shifts in a open center position. Port 1 can be pressurized to 18.5 x pilot port pressure.

Symbol

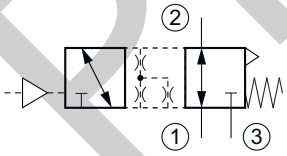

operated by air

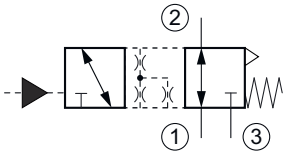

operated by hydraulic fluid

Technical data

General characteristics	Description, value, unit
Product status	Phase-Out
Function group	Directional valve
Function	3-way/2-position

Phase-Out

WWW.SUMY.IR

General characteristics	Description, value, unit
Design	Screw-in cartridge valve
Controls	pneumatical or hydraulical operation
Characteristic	direct acting, spool type
Transition/central position of spool/piston	zero or underlap/negative (open)
Construction size	NG 8 / SAE 10
Thread size	7/8-14 UNF-2A
Mounting attitude	unrestricted
Weight	0.26 kg
Cavity acc. factory standard	For cavity C1030
Tightening torque steel	77.5 Nm
Tightening torque aluminium	50.5 Nm
Tightening torque tolerance	± 5 %
Minimum ambient temperature	- 40 °C
Maximum ambient temperature	+ 120 °C
Surface protection	All external parts zinc plated, chromited (CrVI-free)
Sealing material	see ordering code
Seal kit order number	NBR: SKN-1032 / FKM: SKV-1032

Hydraulic characteristics	Description, value, unit
Maximum operating pressure	350 bar
Maximum flow rate	30 l/min
Flow direction	see symbol
Hydraulic fluid	All general purpose hydraulic fluids such as MIL-H-5606, SAE-#10, SAE-#20, etc.
Minimum fluid temperature	- 25 °C
Maximum fluid temperature	+ 80 °C
Viscosity range	10 ... 500 mm^2/s (cSt)
Recommended viscosity range	20 ... 130 mm^2/s (cSt)
Minimum fluid cleanliness (cleanlineless class according to ISO 4406:1999)	class 18/16/13
Internal leakage flow rate	82 cc/m at 350 bar
Pilot operating media	compressed air or hydraulic fluid
Pilot pressure	pneumatical: 3.5 ... 17.5 bar / hydraulical: 3.5 ... 70 bar

Phase-Out

BUCHER hydraulics
WWW.SUMY.IR

Performance graphs

measured with oil viscosity 28.5 mm²/s (cSt)

Δp = f (Q) Pressure drop-flow rate characteristic

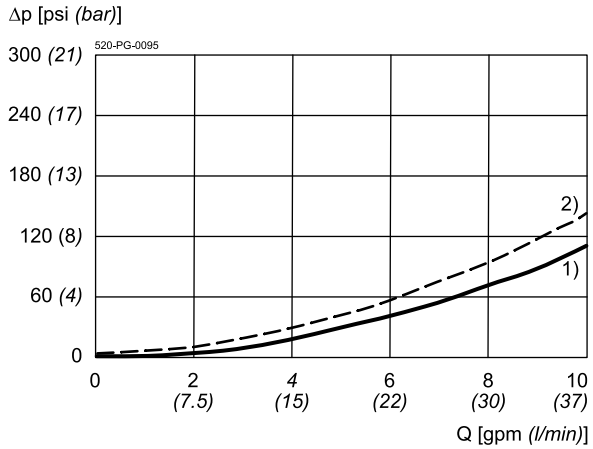

1) = 2 → 1
2) = 3 → 2

Phase-Out

Dimensions and sectional view

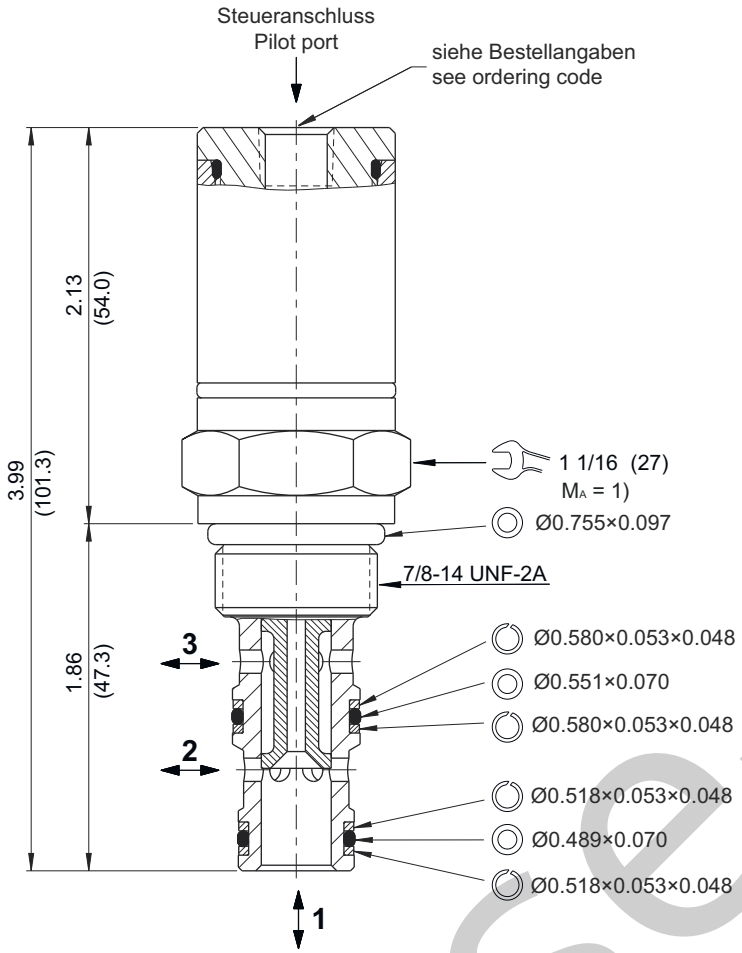

Installation information

ATTENTION!
Only qualified personnel with mechanical skills may carry out any maintenance work. Generally, the only work that should ever be undertaken is to check, and possibly replace, the seals. When changing seals, oil or grease the new seals thoroughly before fitting them.

NOTE!
1) When fitting the screw-in cartridge valve, use the specified tightening torque. The value can be found in the chapter "Technical data".

IMPORTANT!
The seals are not available individually. The seal kit order number can be found in the chapter "Technical data".

Phase-Out

Ordering code

e.g. AODV - 10 - N - 3C - 0 - 4T

AODV = air or hydraulic operated directional control valve

10 = nominal size SAE 10 / NG 8

N = NBR (nitril-butadien-rubber / BUNA) seals *(standard)*
V = FKM (fluorocarbon rubber / VITON) seals
(special seals - please consult BUCHER)

3C = spool type C (3-way/2-position)

0 = screw-in cartridge only
06TA = line-mounting body aluminum SAE #06 ports
06TS = line-mounting body steel SAE #06 ports
08TA = line-mounting body aluminum SAE #08 ports
08TS = line-mounting body steel SAE #08 ports

1P = pilot port 1/8“ NPTF
1B = pilot port G 1/8“ BSPP
4T = pilot port SAE #4

Related data sheets

Reference	Description
520-P-000050	Form tools
520-P-000320	Cavity C1030
520-P-000321	Threaded port body B1030

Phase-Out

info.us@bucherhydraulics.com www.bucherhydraulics.com

© 2025 by Bucher Hydraulics Inc., Elgin, IL 60124, USA

All rights reserved.
Data is provided for the purpose of product description only, and must not be construed as warranted characteristics in the legal sense. The information does not relieve users from the duty of conducting their own evaluations and tests. Because the products are subject to continual improvement, we reserve the right to amend the product specifications contained in this catalogue.

BUCHER hydraulics
WWW.SUMY.IR

Directional valve 3-way/2-position

Q_{max} = 30 l/min, p_{max} = 350 bar
direct acting, spool type, pneumatical or hydraulical operation
Type series: AODV-10-_-3D-...

- Screw-in cartridge valve
- For cavity C1030
- All external parts zinc plated, chromited (CrVI-free)
- Installation in threaded port body type B1030
- Hardened precision fitted spool and sleeve provides reliable, long life
- Open center transition
- The non-corrosive piston assembly allows this valve to operate by air or any type of hydraulic fluid
- Control spool is isolated from hydraulic fluid with high pressure seals

Description

This unit is a three-way, two position, screw-in cartridge style, direct acting spool type, air or hydraulically operated, spring return, hydraulic directional control valve. When pilot piston is not actuated, this valve allows flow between ports 2 to 1 and port 3 is blocked. When pilot piston is pressurized, the spool in this valve is shifted and allows flow between ports 3 to 1 and port 2 is blocked. This valve shifts in a open center position. Port 1 can be pressurized to 18.5 x pilot port pressure.

Symbol

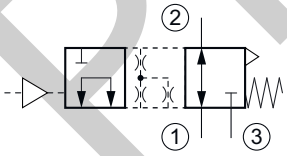

operated by air

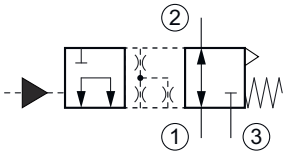

operated by hydraulic fluid

Technical data

General characteristics	Description, value, unit
Product status	Phase-Out
Function group	Directional valve
Function	3-way/2-position

Phase-Out

WWW.SUMY.IR

General characteristics	Description, value, unit
Design	Screw-in cartridge valve
Controls	pneumatical or hydraulical operation
Characteristic	direct acting, spool type
Transition/central position of spool/piston	zero or underlap/negative (open)
Construction size	NG 8 / SAE 10
Thread size	7/8-14 UNF-2A
Mounting attitude	unrestricted
Weight	0.26 kg
Cavity acc. factory standard	For cavity C1030
Tightening torque steel	77.5 Nm
Tightening torque aluminium	50.5 Nm
Tightening torque tolerance	± 5 %
Minimum ambient temperature	- 40 °C
Maximum ambient temperature	+ 120 °C
Surface protection	All external parts zinc plated, chromited (CrVI-free)
Sealing material	see ordering code
Seal kit order number	NBR: SKN-1032 / FKM: SKV-1032

Hydraulic characteristics	Description, value, unit
Maximum operating pressure	350 bar
Maximum flow rate	30 l/min
Flow direction	see symbol
Hydraulic fluid	All general purpose hydraulic fluids such as MIL-H-5606, SAE-#10, SAE-#20, etc.
Minimum fluid temperature	- 25 °C
Maximum fluid temperature	+ 80 °C
Viscosity range	10 ... 500 mm^2/s (cSt)
Recommended viscosity range	20 ... 130 mm^2/s (cSt)
Minimum fluid cleanliness (cleanlineless class according to ISO 4406:1999)	class 18/16/13
Pilot piston area ratio to system pressure area	18.5:1
Internal leakage flow rate	82 cc/m at 350 bar
Pilot operating media	compressed air or hydraulic fluid
Pilot pressure	pneumatical: 3.5 ... 17.5 bar / hydraulical: 3.5 ... 70 bar

Phase-Out

BUCHER hydraulics
WWW.SUMY.IR

Performance graphs

measured with oil viscosity 28.5 mm²/s (cSt)

Δp = f (Q) Pressure drop-flow rate characteristic

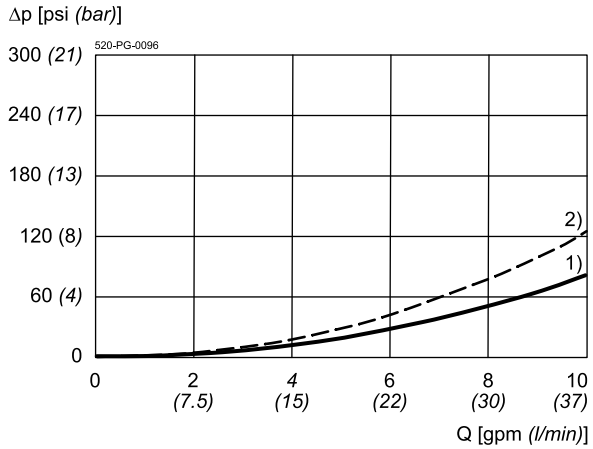

1) = 2 → 1
2) = 3 → 1

Phase-Out

Dimensions and sectional view

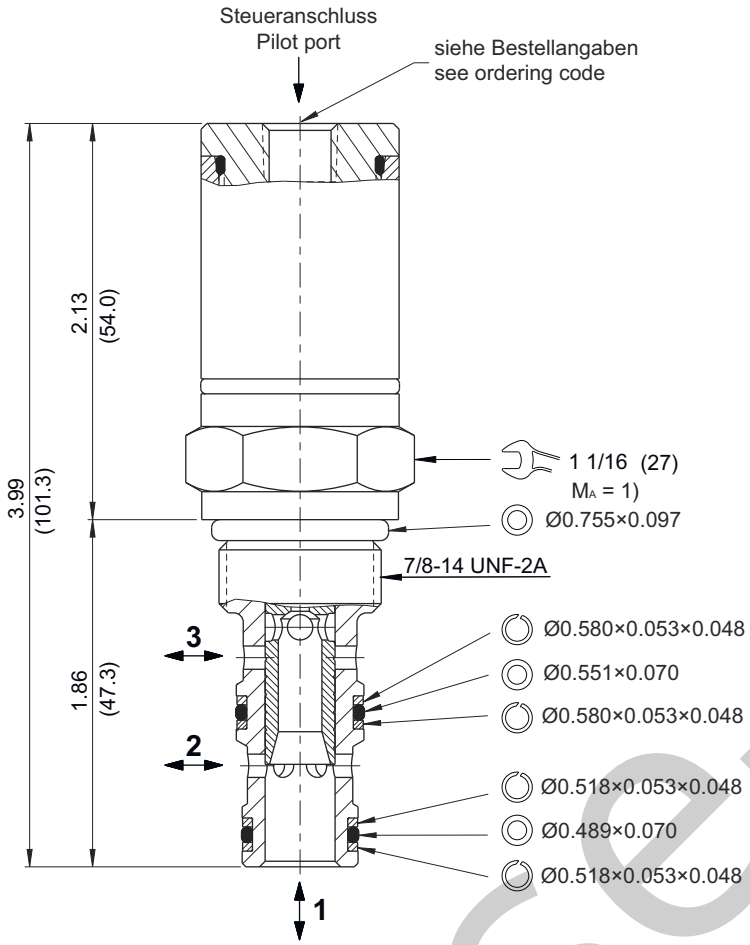

Installation information

ATTENTION!
Only qualified personnel with mechanical skills may carry out any maintenance work. Generally, the only work that should ever be undertaken is to check, and possibly replace, the seals. When changing seals, oil or grease the new seals thoroughly before fitting them.

NOTE!
1) When fitting the screw-in cartridge valve, use the specified tightening torque. The value can be found in the chapter "Technical data".

NOTE!
The seals are not available individually. The seal kit order number can be found in the chapter "Technical data".

Phase-Out

Ordering code

e.g. AODV - 10 - N - 3D - 0 - 4T

AODV = air or hydraulic operated directional control valve

10 = nominal size SAE 10 / NG 8

N = NBR (nitril-butadien-rubber / BUNA) seals *(standard)*
V = FKM (fluorocarbon rubber / VITON) seals
(special seals - please consult BUCHER)

3D = spool type D (3-way/2-position)

0 = screw-in cartridge only
06TA = line-mounting body aluminum SAE #06 ports
06TS = line-mounting body steel SAE #06 ports
08TA = line-mounting body aluminum SAE #08 ports
08TS = line-mounting body steel SAE #08 ports

1P = pilot port 1/8“ NPTF
1B = pilot port G 1/8“ BSPP
4T = pilot port SAE #4

Related data sheets

Reference	Description
520-P-000050	Form tools
520-P-000320	Cavity C1030
520-P-000321	Threaded port body B1030

Phase-Out

info.us@bucherhydraulics.com www.bucherhydraulics.com

© 2025 by Bucher Hydraulics Inc., Elgin, IL 60124, USA

All rights reserved.
Data is provided for the purpose of product description only, and must not be construed as warranted characteristics in the legal sense. The information does not relieve users from the duty of conducting their own evaluations and tests. Because the products are subject to continual improvement, we reserve the right to amend the product specifications contained in this catalogue.

BUCHER hydraulics

WWW.SUMY.IR

Directional valve 4-way/2-position

Q_{max} = 30 l/min, p_{max} = 350 bar
direct acting, spool type, pneumatical or hydraulical operation
Type series: AODV-10-_-4A-...

- Screw-in cartridge valve
- For cavity C1040
- All external parts zinc plated, chromited (CrVI-free)
- Installation in threaded port body type B1040
- Hardened precision fitted spool and sleeve provides reliable, long life
- Closed center transition
- The non-corrosive piston assembly allows this valve to operate by air or any type of hydraulic fluid
- Control spool is isolated from hydraulic fluid with high pressure seals

Description

This unit is a four-way, two position, screw-in cartridge style, direct acting spool type, air or hydraulic operated, spring return, hydraulic directional control valve. When pilot piston is not actuated, this valve allows flow between ports 1 to 2 and ports 3 to 4. When pilot piston is pressurized, the spool in this valve is shifted and allows flow between ports 2 to 3 and ports 1 to 4. This valve shifts in a closed center position. Port 1 can be pressurized to 18.5× pilot port pressure.

Symbol

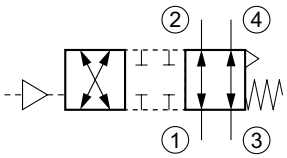

operated by air

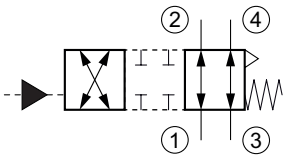

operated by hydraulic fluid

Technical data

General Characteristics	Description, value, unit
Function group	Directional valve
Function	4-way/2-position
Design	Screw-in cartridge valve
Controls	pneumatical or hydraulical operation
Characteristic	direct acting, spool type
Transition/central position of spool/piston	zero or positive overlap (closed)
Construction size	SAE 10 / nominal size 8
Thread size	7/8-14 UNF-2A
Mounting attitude	unrestricted
Weight	0.30 kg
Cavity acc. factory standard	For cavity C1040
Tightening torque steel	77.5 Nm
Tightening torque aluminium	50.5 Nm
Tightening torque tolerance	± 5 %
Minimum ambient temperature	- 40 °C
Maximum ambient temperature	+ 120 °C
Surface protection	All external parts zinc plated, chromited (CrVI-free)
Available seal types	several seal types available, see ordering code
Seal kit order number	NBR: SKN-1042 / FKM: SKV-1042

Hydraulic Characteristics	Description, value, unit
Maximum operating pressure	350 bar
Maximum flow rate	30 l/min
Flow direction	see symbol
Hydraulic fluid	All general purpose hydraulic fluids such as MIL-H-5606, SAE-#10, SAE-#20, etc.
Minimum fluid temperature	- 25 °C
Maximum fluid temperature	+ 80 °C
Viscosity range	10 ... 500 mm^2/s (cSt)
Recommended viscosity range	20 ... 130 mm^2/s (cSt)
Minimum fluid cleanliness (cleanlineless class according to ISO 4406:1999)	class 18/16/13
Pilot piston area ratio to system pressure area	18.5:1
Internal leakage flow rate	82 cc/min at 350 bar
Pilot operating media	air or hydraulic fluid
Pilot pressure	pneumatical: 3.5 ... 17.5 bar / hydraulical: 3.5 ... 70 bar

Performance graphs

measured with oil viscosity 28.5 mm²/s (cSt)

Δp = f (Q) Pressure drop-flow rate characteristic

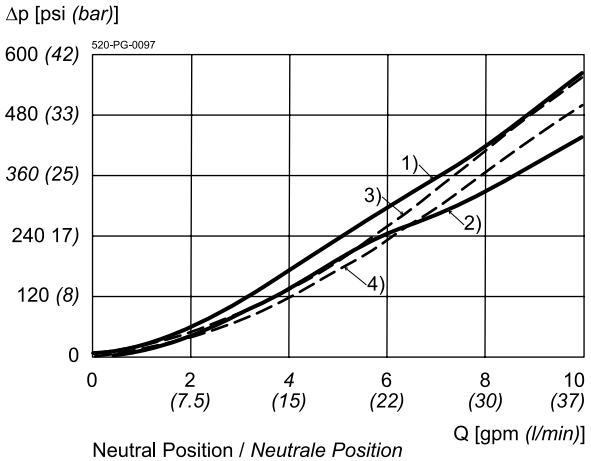

Neutral Position / *Neutrale Position*
1) = 3 → 4
2) = 2 → 1

Piloted Position / *Gesteuerte Position*
3) = 3 → 2
4) = 4 → 1

Dimensions and sectional view

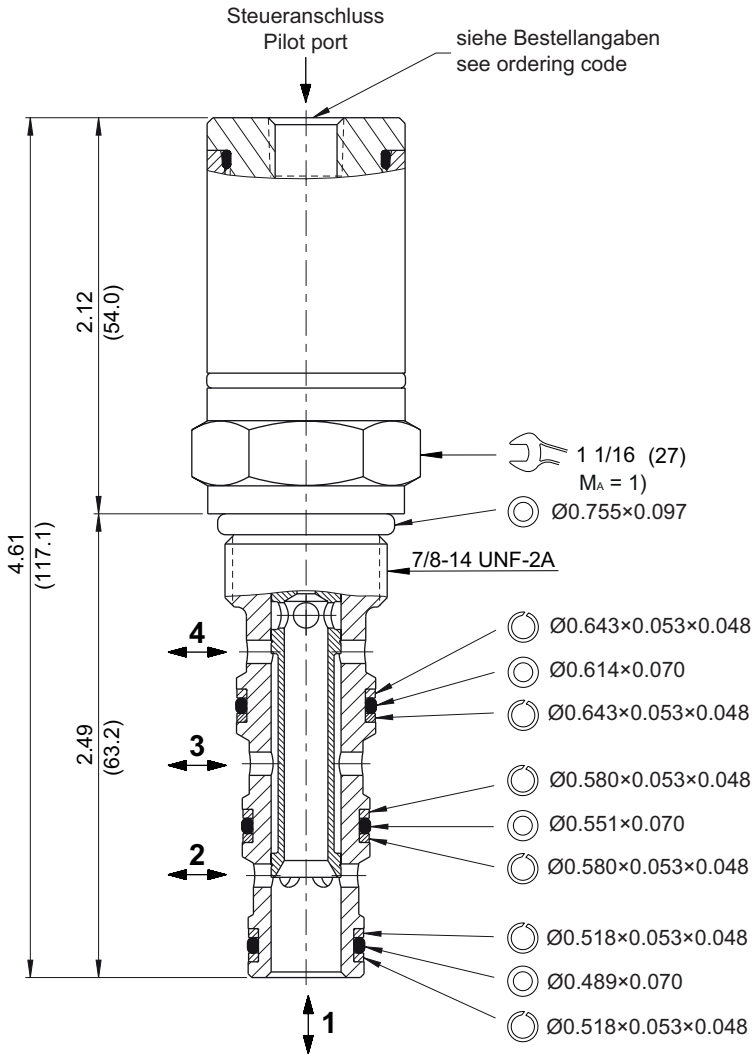

Installation information

ATTENTION!
Only qualified personnel with mechanical skills may carry out any maintenance work. Generally, the only work that should ever be undertaken is to check, and possibly replace, the seals. When changing seals, oil or grease the new seals thoroughly before fitting them.

NOTE!
The seals are not available individually. The seal kit order number can be found in the chapter "Technical data".

NOTE!
1) When fitting the screw-in cartridge valve, use the specified tightening torque. The value can be found in the chapter "Technical data".

Ordering code

e.g. AODV - 10 - N - 4A - 0 - 4T

AODV = air or hydraulic operated directional control valve

10 = nominal size SAE 10 / NG 8

N = NBR (nitril-butadien-rubber / BUNA) seals *(standard)*
V = FKM (fluorocarbon rubber / VITON) seals
(special seals - please consult BUCHER)

4A = spool type A (4-way/2-position)

0 = screw-in cartridge only
06TA = line-mounting body aluminum SAE #06 ports
06TS = line-mounting body steel SAE #06 ports
08TA = line-mounting body aluminum SAE #08 ports
08TS = line-mounting body steel SAE #08 ports

1P = pilot port 1/8“ NPTF
1B = pilot port G 1/8“ BSPP
4T = pilot port SAE #4

Related data sheets

Reference	Description
520-P-000050	Form tools
520-P-000420	Cavity C1040
520-P-000421	Threaded port body B1040

info.us@bucherhydraulics.com www.bucherhydraulics.com

© 2022 by Bucher Hydraulics Inc., Elgin, IL 60124, USA

All rights reserved.
Data is provided for the purpose of product description only, and must not be construed as warranted characteristics in the legal sense. The information does not relieve users from the duty of conducting their own evaluations and tests. Because the products are subject to continual improvement, we reserve the right to amend the product specifications contained in this catalogue.

BUCHER hydraulics
WWW.SUMY.IR

Directional valve 4-way/2-position

Q_{max} = 30 l/min, p_{max} = 350 bar
direct acting, spool type, pneumatical or hydraulical operation
Type series: AODV-10-_-4B-...

- Screw-in cartridge valve
- For cavity C1040
- All external parts zinc plated, chromited (CrVI-free)
- Installation in threaded port body type B1040
- Hardened precision fitted spool and sleeve provides reliable, long life
- Closed center transition
- The non-corrosive piston assembly allows this valve to operate by air or any type of hydraulic fluid
- Control spool is isolated from hydraulic fluid with high pressure seals

Description

This unit is a four-way, two position, screw-in cartridge style, direct acting spool type, air or hydraulically operated, spring return, hydraulic directional control valve. When pilot piston is not actuated, this valve allows no flow between ports 1 to 2 and ports 3 to 4. When pilot piston is pressurized, the spool in this valve is shifted and allows flow between ports 1 to 2 and ports 3 to 4. This is a normally closed four-way selector valve. Port 1 can be pressurized to 18.5 x pilot port pressure.

Symbol

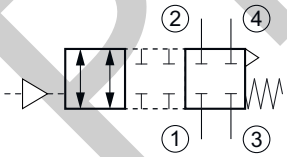

operated by air

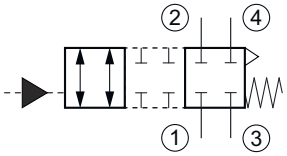

operated by hydraulic fluid

Technical data

General characteristics	Description, value, unit
Product status	Phase-Out
Function group	Directional valve
Function	4-way/2-position

Phase-Out

WWW.SUMY.IR

General characteristics	Description, value, unit
Design	Screw-in cartridge valve
Controls	pneumatical or hydraulical operation
Characteristic	direct acting, spool type
Transition/central position of spool/piston	zero or overlap/positive (closed)
Construction size	NG 8 / SAE 10
Thread size	7/8-14 UNF-2A
Mounting attitude	unrestricted
Weight	0.27 kg
Cavity acc. factory standard	For cavity C1040
Tightening torque steel	77.5 Nm
Tightening torque aluminium	50.5 Nm
Tightening torque tolerance	± 5 %
Minimum ambient temperature	- 40 °C
Maximum ambient temperature	+ 120 °C
Surface protection	All external parts zinc plated, chromited (CrVI-free)
Sealing material	see ordering code
Seal kit order number	NBR: SKN-1042 / FKM: SKV-1042

Hydraulic characteristics	Description, value, unit
Maximum operating pressure	350 bar
Maximum flow rate	30 l/min
Flow direction	see symbol
Hydraulic fluid	All general purpose hydraulic fluids such as MIL-H-5606, SAE-#10, SAE-#20, etc.
Minimum fluid temperature	- 25 °C
Maximum fluid temperature	+ 80 °C
Viscosity range	10 ... 500 mm^2/s (cSt)
Recommended viscosity range	20 ... 130 mm^2/s (cSt)
Minimum fluid cleanliness (cleanlineless class according to ISO 4406:1999)	class 18/16/13
Internal leakage flow rate	82 cc/min at 350 bar
Pilot operating media	compressed air or hydraulic fluid
Pilot pressure	pneumatical: 3.5 ... 17.5 bar / hydraulical: 3.5 ... 70 bar

Phase-Out

BUCHER hydraulics
WWW.SUMY.IR

Performance graphs

measured with oil viscosity 28.5 mm²/s (cSt)

Δp = f (Q) Pressure drop-flow rate characteristic

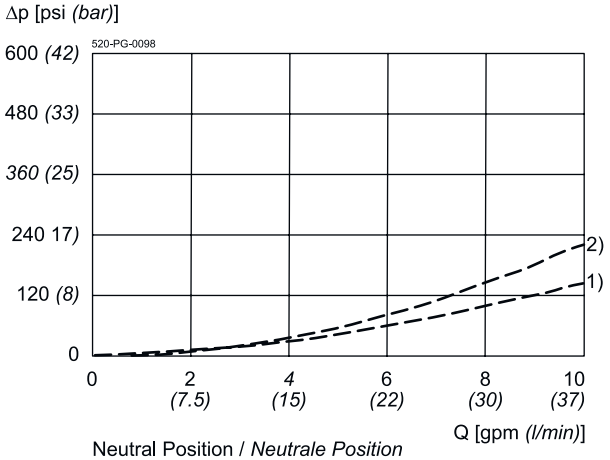

Neutral Position / *Neutrale Position*
- All Ports Blocked / *Alle Anschlüsse blockiert*

Piloted Position / *Gesteuerte Position*
1) = 3 → 4
2) = 2 → 1

Phase-Out

WWW.SUMY.IR

Dimensions and sectional view

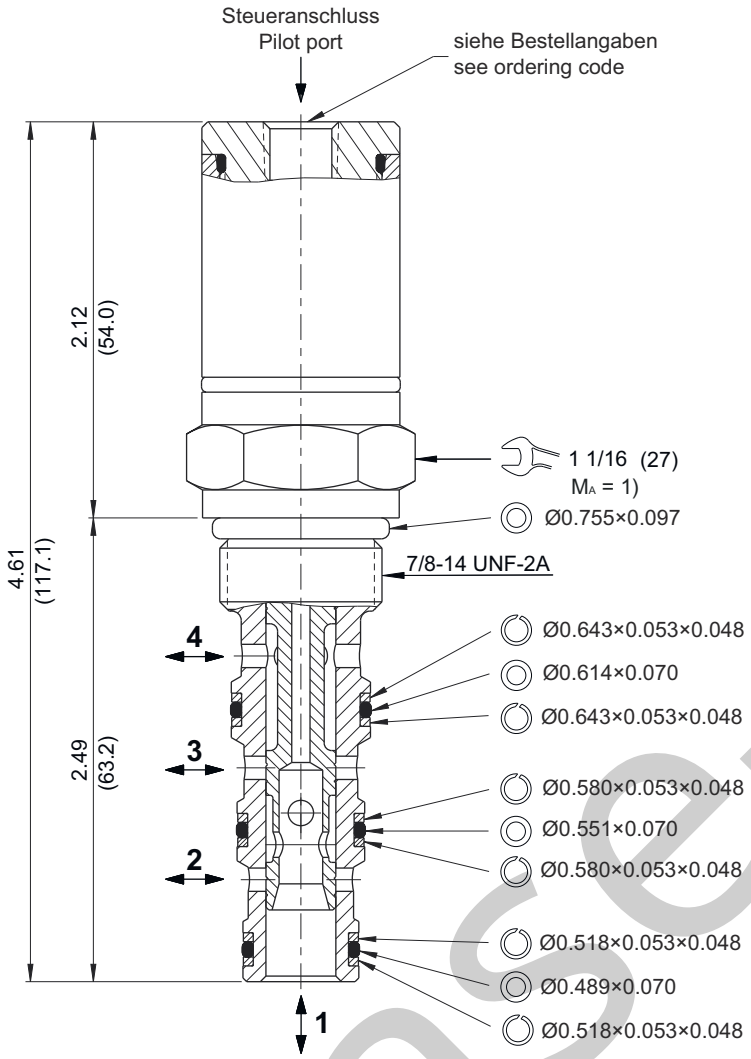

Installation information

ATTENTION!
Only qualified personnel with mechanical skills may carry out any maintenance work. Generally, the only work that should ever be undertaken is to check, and possibly replace, the seals. When changing seals, oil or grease the new seals thoroughly before fitting them.

NOTE!
1) When fitting the screw-in cartridge valve, use the specified tightening torque. The value can be found in the chapter "Technical data".

NOTE!
The seals are not available individually. The seal kit order number can be found in the chapter "Technical data".

Phase-Out

Ordering code

e.g. AODV - 10 - N - 4B - 0 - 4T

AODV = air or hydraulic operated directional control valve

10 = nominal size SAE 10 / NG 8

N = NBR (nitril-butadien-rubber / BUNA) seals *(standard)*
V = FKM (fluorocarbon rubber / VITON) seals
(special seals - please consult BUCHER)

4B = spool type B (4-way/2-position)

0 = screw-in cartridge only
06TA = line-mounting body aluminum SAE #06 ports
06TS = line-mounting body steel SAE #06 ports
08TA = line-mounting body aluminum SAE #08 ports
08TS = line-mounting body steel SAE #08 ports

1P = pilot port 1/8“ NPTF
1B = pilot port G 1/8“ BSPP
4T = pilot port SAE #4

Related data sheets

Reference	Description
520-P-000050	Form tools
520-P-000420	Cavity C1040
520-P-000421	Threaded port body B1040

Phase-Out

info.us@bucherhydraulics.com www.bucherhydraulics.com

© 2025 by Bucher Hydraulics Inc., Elgin, IL 60124, USA

All rights reserved.
Data is provided for the purpose of product description only, and must not be construed as warranted characteristics in the legal sense. The information does not relieve users from the duty of conducting their own evaluations and tests. Because the products are subject to continual improvement, we reserve the right to amend the product specifications contained in this catalogue.

BUCHER hydraulics
WWW.SUMY.IR

Directional valve 4-way/2-position

Q_{max} = 30 l/min, p_{max} = 350 bar
direct acting, spool type, pneumatical or hydraulical operation
Type series: AODV-10-_-4C-...

- Screw-in cartridge valve
- For cavity C1040
- All external parts zinc plated, chromited (CrVI-free)
- Installation in threaded port body type B1040
- Hardened precision fitted spool and sleeve provides reliable, long life
- Closed center transition
- The non-corrosive piston assembly allows this valve to operate by air or any type of hydraulic fluid
- Control spool is isolated from hydraulic fluid with high pressure seals

Description

This unit is a four-way, two position, screw-in cartridge style, direct acting spool type, air or hydraulically operated, spring return, hydraulic directional control valve. When pilot piston is not actuated, this valve allows flow between ports 1 to 2 and ports 3 to 4. When pilot piston is pressurized, the spool in this valve is shifted and allows no flow between ports 1 to 2 and ports 3 to 4. This is a normally open four-way selector valve. Port 1 can be pressurized to 18.5 x pilot port pressure.

Symbol

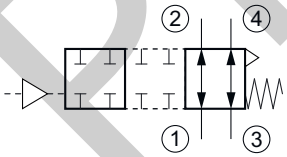

operated by air

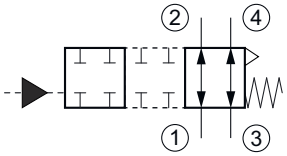

operated by hydraulic fluid

Technical data

General characteristics	Description, value, unit
Product status	Phase-Out
Function group	Directional valve
Function	4-way/2-position

Phase-Out

WWW.SUMY.IR

General characteristics	Description, value, unit
Design	Screw-in cartridge valve
Controls	pneumatical or hydraulical operation
Characteristic	direct acting, spool type
Transition/central position of spool/piston	zero or overlap/positive (closed)
Construction size	NG 8 / SAE 10
Thread size	7/8-14 UNF-2A
Mounting attitude	unrestricted
Weight	0.27 kg
Cavity acc. factory standard	For cavity C1040
Tightening torque steel	77.5 Nm
Tightening torque aluminium	50.5 Nm
Tightening torque tolerance	± 5 %
Minimum ambient temperature	- 40 °C
Maximum ambient temperature	+ 120 °C
Surface protection	All external parts zinc plated, chromited (CrVI-free)
Sealing material	see ordering code
Seal kit order number	NBR: SKN-1042 / FKM: SKV-1042

Hydraulic characteristics	Description, value, unit
Maximum operating pressure	350 bar
Maximum flow rate	30 l/min
Flow direction	see symbol
Hydraulic fluid	All general purpose hydraulic fluids such as MIL-H-5606, SAE-#10, SAE-#20, etc.
Minimum fluid temperature	- 25 °C
Maximum fluid temperature	+ 80 °C
Viscosity range	10 ... 500 mm^2/s (cSt)
Recommended viscosity range	20 ... 130 mm^2/s (cSt)
Minimum fluid cleanliness (cleanlineless class according to ISO 4406:1999)	class 18/16/13
Pilot piston area ratio to system pressure area	18.5:1
Internal leakage flow rate	82 cc/min at 350 bar
Pilot operating media	compressed air or hydraulic fluid
Pilot pressure	pneumatical: 3.5 ... 17.5 bar / hydraulical: 3.5 ... 70 bar

Phase-Out

BUCHER hydraulics
WWW.SUMY.IR

Performance graphs

measured with oil viscosity 28.5 mm²/s (cSt)

Δp = f (Q) Pressure drop-flow rate characteristic

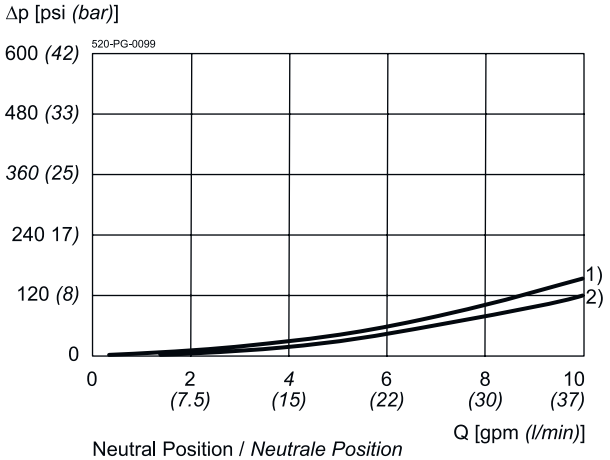

Neutral Position / *Neutrale Position*
1) = 3 → 4
2) = 2 → 1

Piloted Position / *Gesteuerte Position*
- All Ports Blocked / *Alle Anschlüsse blockiert*

Phase-Out

Dimensions and sectional view

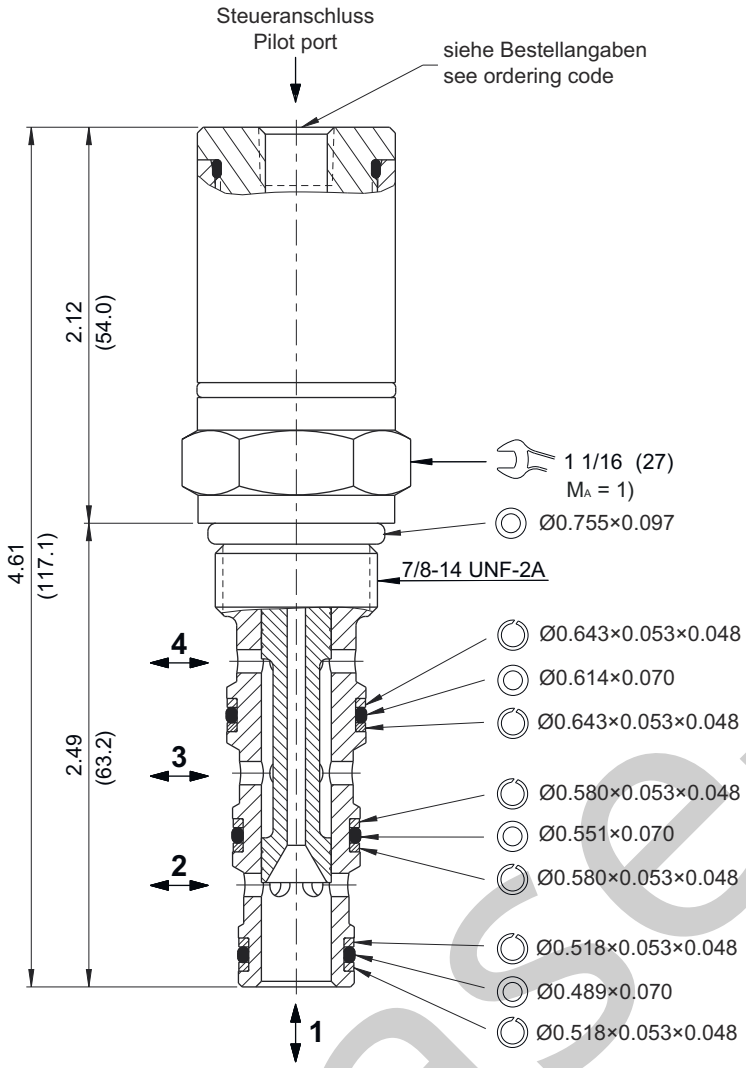

Installation information

ATTENTION!
Only qualified personnel with mechanical skills may carry out any maintenance work. Generally, the only work that should ever be undertaken is to check, and possibly replace, the seals. When changing seals, oil or grease the new seals thoroughly before fitting them.

NOTE!
1) When fitting the screw-in cartridge valve, use the specified tightening torque. The value can be found in the chapter "Technical data".

NOTE!
The seals are not available individually. The seal kit order number can be found in the chapter "Technical data".

Phase-Out

Ordering code

e.g. AODV - 10 - N - 4C - 0 - 4T

AODV = air or hydraulic operated directional control valve

10 = nominal size SAE 10 / NG 8

N = NBR (nitril-butadien-rubber / BUNA) seals *(standard)*
V = FKM (fluorocarbon rubber / VITON) seals
(special seals - please consult BUCHER)

4C = spool type C (4-way/2-position)

0 = screw-in cartridge only
06TA = line-mounting body aluminum SAE #06 ports
06TS = line-mounting body steel SAE #06 ports
08TA = line-mounting body aluminum SAE #08 ports
08TS = line-mounting body steel SAE #08 ports

1P = pilot port 1/8“ NPTF
1B = pilot port G 1/8“ BSPP
4T = pilot port SAE #4

Related data sheets

Reference	Description
520-P-000050	Form tools
520-P-000420	Cavity C1040
520-P-000421	Threaded port body B1040

Phase-Out

info.us@bucherhydraulics.com www.bucherhydraulics.com

© 2025 by Bucher Hydraulics Inc., Elgin, IL 60124, USA

All rights reserved.
Data is provided for the purpose of product description only, and must not be construed as warranted characteristics in the legal sense. The information does not relieve users from the duty of conducting their own evaluations and tests. Because the products are subject to continual improvement, we reserve the right to amend the product specifications contained in this catalogue.

BUCHER hydraulics
WWW.SUMY.IR

Directional valve 4-way/2-position

Q_{max} = 30 l/min, p_{max} = 350 bar
direct acting, spool type, pneumatical or hydraulical operation
Type series: AODV-10-_-4D-...

- Screw-in cartridge valve
- For cavity C1040
- All external parts zinc plated, chromited (CrVI-free)
- Installation in threaded port body type B1040
- Hardened precision fitted spool and sleeve provides reliable, long life
- Open center transition
- The non-corrosive piston assembly allows this valve to operate by air or any type of hydraulic fluid
- Control spool is isolated from hydraulic fluid with high pressure seals

Description

This unit is a four-way, two position, screw-in cartridge style, direct acting spool type, air or hydraulically operated, spring return, hydraulic directional control valve. When pilot piston is not actuated, this valve allows flow between ports 1 to 3 and ports 2 and 4 are blocked. When pilot piston is pressurized, the spool in this valve is shifted and allows flow between ports 1 to 2 and ports 3 to 4. This is a tandem center four-way directional valve. Port 1 can be pressurized to 18.5 x pilot port pressure.

Symbol

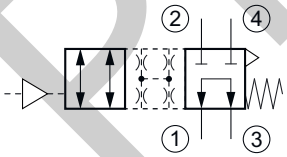

operated by air

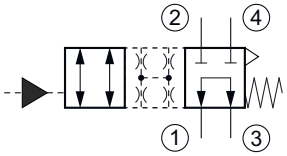

operated by hydraulic fluid

Technical data

General characteristics	Description, value, unit
Product status	Phase-Out
Function group	Directional valve
Function	4-way/2-position

Phase-Out

WWW.SUMY.IR

General characteristics	Description, value, unit
Design	Screw-in cartridge valve
Controls	pneumatical or hydraulical operation
Characteristic	direct acting, spool type
Transition/central position of spool/piston	zero or underlap/negative (open)
Construction size	NG 8 / SAE 10
Thread size	7/8-14 UNF-2A
Mounting attitude	unrestricted
Weight	0.27 kg
Cavity acc. factory standard	For cavity C1040
Tightening torque steel	77.5 Nm
Tightening torque aluminium	50.5 Nm
Tightening torque tolerance	± 5 %
Minimum ambient temperature	- 40 °C
Maximum ambient temperature	+ 120 °C
Surface protection	All external parts zinc plated, chromited (CrVI-free)
Sealing material	see ordering code
Seal kit order number	NBR: SKN-1042 / FKM: SKV-1042

Hydraulic characteristics	Description, value, unit
Maximum operating pressure	350 bar
Maximum flow rate	30 l/min
Flow direction	see symbol
Hydraulic fluid	All general purpose hydraulic fluids such as MIL-H-5606, SAE-#10, SAE-#20, etc.
Minimum fluid temperature	- 25 °C
Maximum fluid temperature	+ 80 °C
Viscosity range	10 ... 500 mm^2/s (cSt)
Recommended viscosity range	20 ... 130 mm^2/s (cSt)
Minimum fluid cleanliness (cleanlineless class according to ISO 4406:1999)	class 18/16/13
Internal leakage flow rate	82 cc/min at 350 bar
Pilot operating media	compressed air or hydraulic fluid
Pilot pressure	pneumatical: 3.5 ... 17.5 bar / hydraulical: 3.5 ... 70 bar

Phase-Out

BUCHER
hydraulics
WWW.SUMY.IR

Performance graphs

measured with oil viscosity 28.5 mm²/s (cSt)

Δp = f (Q) Pressure drop-flow rate characteristic

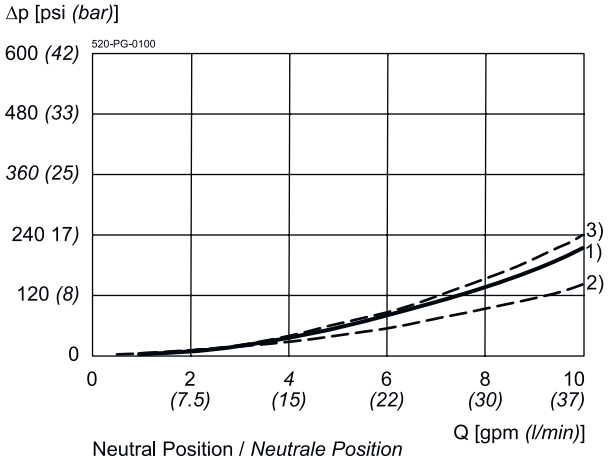

Neutral Position / *Neutrale Position*
1) = 3 → 1

Piloted Position / *Gesteuerte Position*
2) = 3 → 4
3) = 2 → 1

Phase-Out

Dimensions and sectional view

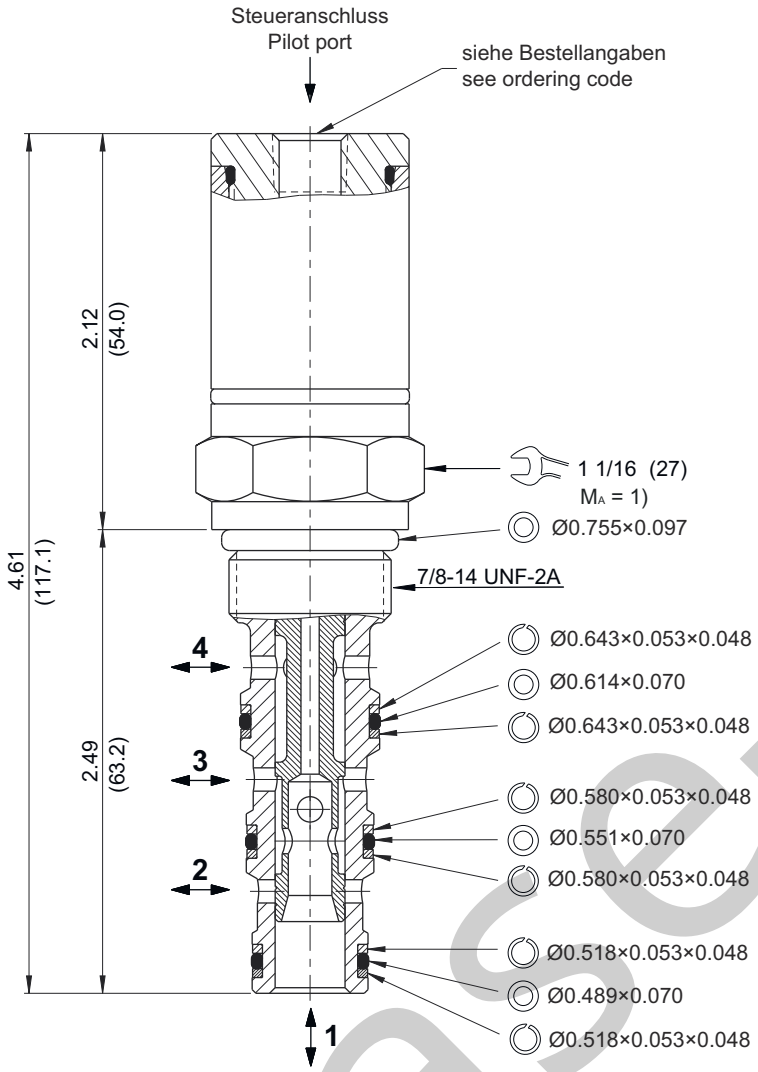

Installation information

ATTENTION!
Only qualified personnel with mechanical skills may carry out any maintenance work. Generally, the only work that should ever be undertaken is to check, and possibly replace, the seals. When changing seals, oil or grease the new seals thoroughly before fitting them.

NOTE!
1) When fitting the screw-in cartridge valve, use the specified tightening torque. The value can be found in the chapter "Technical data".

NOTE!
The seals are not available individually. The seal kit order number can be found in the chapter "Technical data".

Phase-Out

Ordering code

e.g. AODV - 10 - N - 4D - 0 - 4T

AODV = air or hydraulic operated directional control valve

10 = nominal size SAE 10 / NG 8

N = NBR (nitril-butadien-rubber / BUNA) seals *(standard)*
V = FKM (fluorocarbon rubber / VITON) seals
(special seals - please consult BUCHER)

4D = spool type D (4-way/2-position)

0 = screw-in cartridge only
06TA = line-mounting body aluminum SAE #06 ports
06TS = line-mounting body steel SAE #06 ports
08TA = line-mounting body aluminum SAE #08 ports
08TS = line-mounting body steel SAE #08 ports

1P = pilot port 1/8“ NPTF
1B = pilot port G 1/8“ BSPP
4T = pilot port SAE #4

Related data sheets

Reference	Description
520-P-000050	Form tools
520-P-000420	Cavity C1040
520-P-000421	Threaded port body B1040

Phase-Out

info.us@bucherhydraulics.com www.bucherhydraulics.com

© 2025 by Bucher Hydraulics Inc., Elgin, IL 60124, USA

All rights reserved.
Data is provided for the purpose of product description only, and must not be construed as warranted characteristics in the legal sense. The information does not relieve users from the duty of conducting their own evaluations and tests. Because the products are subject to continual improvement, we reserve the right to amend the product specifications contained in this catalogue.

BUCHER hydraulics
WWW.SUMY.IR

Directional valve 2-way/2-position

Q_{max} = 30 l/min, p_{max} = 350 bar
direct acting, spool type, pneumatical or hydraulical operation
Type series: AODV-10-_-C1-...

- Screw-in cartridge valve
- For cavity C1020
- All external parts zinc plated, chromited (CrVI-free)
- Installation in threaded port body type B1020
- Hardened precision fitted spool and sleeve provides reliable, long life
- The non-corrosive piston assembly allows this valve to operate by air or any type of hydraulic fluid
- Control spool is isolated from hydraulic fluid with high pressure seals

Description

This unit is a normally closed, two position, screw-in cartridge style, direct acting spool type, air or hydraulically operated, spring return, hydraulic directional control valve. When pilot piston is not actuated, this valve allows no flow between ports 2 to 1. When pilot piston is pressurized, the spool in this valve is shifted and allows flow between ports 2 to 1. Port 1 can be pressurized to 18.5 x pilot port pressure.

Symbol

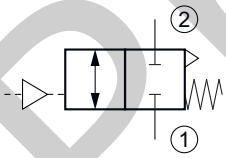

operated by air

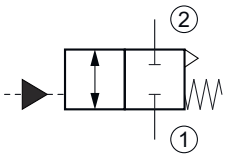

operated by hydraulic fluid

Technical data

General characteristics	Description, value, unit
Product status	Phase-Out
Function group	Directional valve
Function	2-way/2-position
Design	Screw-in cartridge valve
Controls	pneumatical or hydraulical operation

Phase-Out

WWW.SUMY.IR

General characteristics	Description, value, unit
Characteristic	direct acting, spool type
Construction size	NG 8 / SAE 10
Thread size	7/8-14 UNF-2A
Mounting attitude	unrestricted
Weight	0.24 kg
Cavity acc. factory standard	For cavity C1020
Tightening torque steel	77.5 Nm
Tightening torque aluminium	50.5 Nm
Tightening torque tolerance	± 5 %
Minimum ambient temperature	- 40 °C
Maximum ambient temperature	+ 120 °C
Surface protection	All external parts zinc plated, chromited (CrVI-free)
Sealing material	see ordering code
Seal kit order number	NBR: SKN-1022 / FKM: SKV-1022

Hydraulic characteristics	Description, value, unit
Maximum operating pressure	350 bar
Maximum flow rate	30 l/min
Flow direction	see symbol
Hydraulic fluid	All general purpose hydraulic fluids such as MIL-H-5606, SAE-#10, SAE-#20, etc.
Minimum fluid temperature	- 25 °C
Maximum fluid temperature	+ 80 °C
Viscosity range	10 ... 500 mm^2/s (cSt)
Recommended viscosity range	20 ... 130 mm^2/s (cSt)
Minimum fluid cleanliness (cleanlineless class according to ISO 4406:1999)	class 18/16/13
Pilot piston area ratio to system pressure area	18.5:1
Internal leakage flow rate	82 cc/min at 350 bar
Pilot operating media	compressed air or hydraulic fluid
Pilot pressure	pneumatical: 3.5 ... 17.5 bar / hydraulical: 3.5 ... 70 bar

Phase-Out

Performance graphs

measured with oil viscosity 28.5 mm²/s (cSt)

Δp = f (Q) Pressure drop-flow rate characteristic

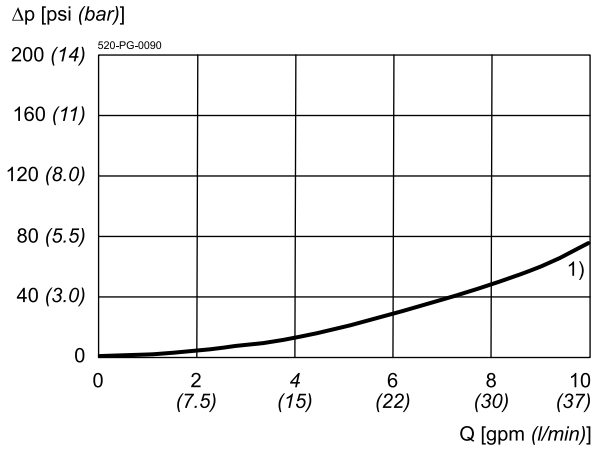

1) pilot port pressurized

Dimensions and sectional view

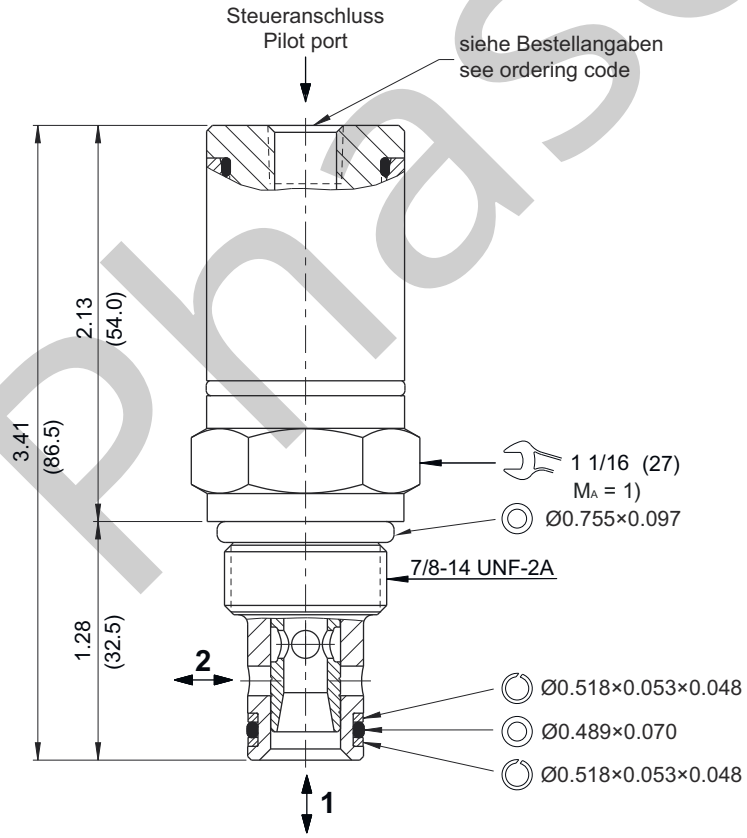

Phase-Out

Installation information

ATTENTION!
Only qualified personnel with mechanical skills may carry out any maintenance work. Generally, the only work that should ever be undertaken is to check, and possibly replace, the seals. When changing seals, oil or grease the new seals thoroughly before fitting them.

NOTE!
1) When fitting the screw-in cartridge valve, use the specified tightening torque. The value can be found in the chapter "Technical data".

NOTE!
The seals are not available individually. The seal kit order number can be found in the chapter "Technical data".

Ordering code

e.g. AODV - 10 - N - C1 - 0 - 4T

AODV	= air or hydraulic operated directional control valve	
10	= nominal size SAE 10 / NG 8	
N	= NBR (nitril-butadien-rubber / BUNA) seals *(standard)*	
V	= FKM (fluorocarbon rubber / VITON) seals *(special seals - please consult BUCHER)*	
C1	= normally closed spool (2-way/2-position)	
0	= screw-in cartridge only	
06TA	= line-mounting body aluminum	SAE #06 ports
06TS	= line-mounting body steel	SAE #06 ports
08TA	= line-mounting body aluminum	SAE #08 ports
08TS	= line-mounting body steel	SAE #08 ports
1P	= pilot port 1/8“ NPTF	
1B	= pilot port G 1/8“ BSPP	
4T	= pilot port SAE #4	

Related data sheets

Reference	Description
520-P-000050	Form tools
520-P-000120	Cavity C1020
520-P-000121	Threaded port body B1020

Phase-Out

info.us@bucherhydraulics.com **www.bucherhydraulics.com**

© 2025 by Bucher Hydraulics Inc., Elgin, IL 60124, USA

All rights reserved.
Data is provided for the purpose of product description only, and must not be construed as warranted characteristics in the legal sense. The information does not relieve users from the duty of conducting their own evaluations and tests. Because the products are subject to continual improvement, we reserve the right to amend the product specifications contained in this catalogue.

BUCHER hydraulics
WWW.SUMY.IR

Directional valve 2-way/2-position

Q_{max} = 30 l/min, p_{max} = 350 bar
direct acting, spool type, pneumatical or hydraulical operation
Type series: AODV-10-_-O1-...

- Screw-in cartridge valve
- For cavity C1020
- All external parts zinc plated, chromited (CrVI-free)
- Installation in threaded port body type B1020
- Hardened precision fitted spool and sleeve provides reliable, long life
- The non-corrosive piston assembly allows this valve to operate by air or any type of hydraulic fluid
- Control spool is isolated from hydraulic fluid with high pressure seals

Description

This unit is a normally open, two position, screw-in cartridge style, direct acting spool type, air or hydraulically operated, spring return, hydraulic directional control valve. When pilot piston is not actuated, this valve allows flow between ports 2 to 1. When pilot piston is pressurized, the spool in this valve is shifted and allows no flow between ports 2 to 1. Port 1 can be pressurized to 18.5 x pilot port pressure.

Symbol

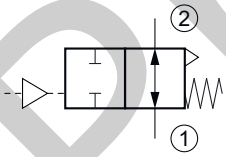

operated by air

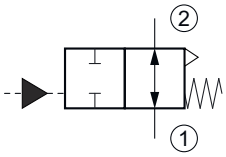

operated by hydraulic fluid

Technical data

General characteristics	Description, value, unit
Product status	Phase-Out
Function group	Directional valve
Function	2-way/2-position
Design	Screw-in cartridge valve
Controls	pneumatical or hydraulical operation

Phase-Out

WWW.SUMY.IR

General characteristics	Description, value, unit
Characteristic	direct acting, spool type
Construction size	NG 8 / SAE 10
Thread size	7/8-14 UNF-2A
Mounting attitude	unrestricted
Weight	0.24 kg
Cavity acc. factory standard	For cavity C1020
Tightening torque steel	77.5 Nm
Tightening torque aluminium	50.5 Nm
Tightening torque tolerance	± 5 %
Minimum ambient temperature	- 40 °C
Maximum ambient temperature	+ 120 °C
Surface protection	All external parts zinc plated, chromited (CrVI-free)
Sealing material	see ordering code
Seal kit order number	NBR: SKN-1022 / FKM: SKV-1022

Hydraulic characteristics	Description, value, unit
Maximum operating pressure	350 bar
Maximum flow rate	30 l/min
Flow direction	see symbol
Hydraulic fluid	All general purpose hydraulic fluids such as MIL-H-5606, SAE-#10, SAE-#20, etc.
Minimum fluid temperature	- 25 °C
Maximum fluid temperature	+ 80 °C
Viscosity range	10 ... 500 mm^2/s (cSt)
Recommended viscosity range	20 ... 130 mm^2/s (cSt)
Minimum fluid cleanliness (cleanlineless class according to ISO 4406:1999)	class 18/16/13
Pilot piston area ratio to system pressure area	18.5:1
Internal leakage flow rate	82 cc/m at 350 bar
Pilot operating media	compressed air or hydraulic fluid
Pilot pressure	pneumatical: 3.5 ... 17.5 bar / hydraulical: 3.5 ... 70 bar

Phase-Out

BUCHER
hydraulics
WWW.SUMY.IR

Performance graphs

measured with oil viscosity 28.5 mm²/s (cSt)

Δp = f (Q) Pressure drop-flow rate characteristic

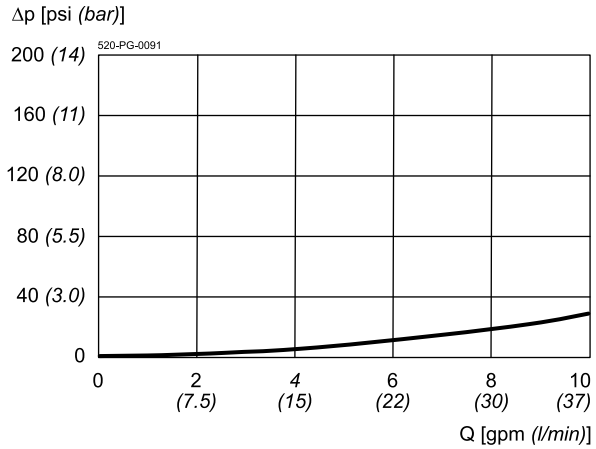

Dimensions and sectional view

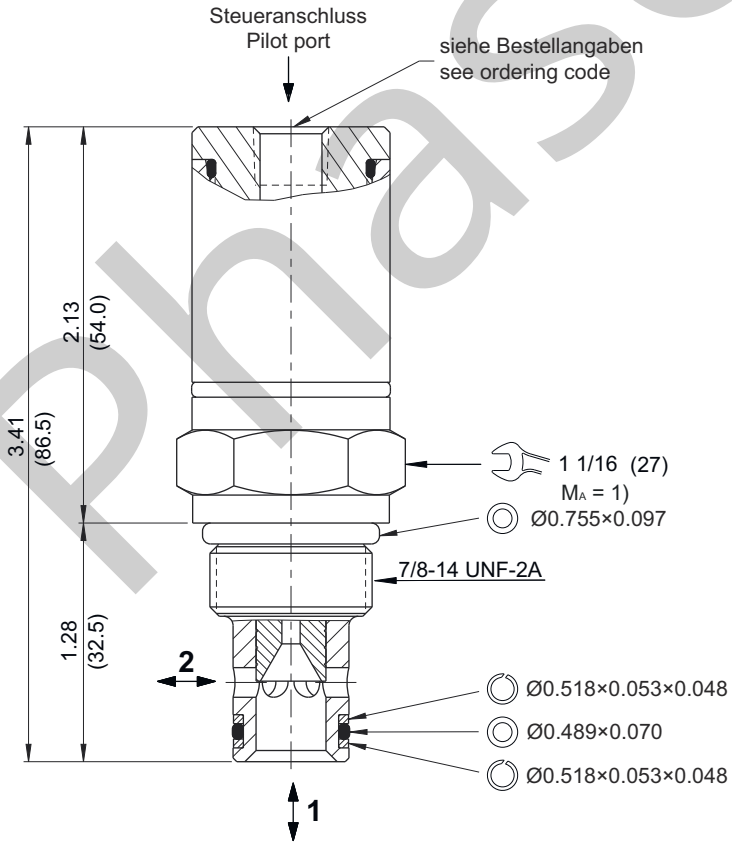

Phase-Out

Installation information

ATTENTION!
Only qualified personnel with mechanical skills may carry out any maintenance work. Generally, the only work that should ever be undertaken is to check, and possibly replace, the seals. When changing seals, oil or grease the new seals thoroughly before fitting them.

NOTE!
1) When fitting the screw-in cartridge valve, use the specified tightening torque. The value can be found in the chapter "Technical data".

NOTE!
The seals are not available individually. The seal kit order number can be found in the chapter "Technical data".

Ordering code

e.g. AODV - 10 - N - O1 - 0 - 4T

AODV = air or hydraulic operated directional control valve
10 = nominal size SAE 10 / NG 8
N = NBR (nitril-butadien-rubber / BUNA) seals *(standard)*
V = FKM (fluorocarbon rubber / VITON) seals
(special seals - please consult BUCHER)
O1 = normally open spool (2-way/2-position)
0 = screw-in cartridge only
06TA = line-mounting body aluminum SAE #06 ports
06TS = line-mounting body steel SAE #06 ports
08TA = line-mounting body aluminum SAE #08 ports
08TS = line-mounting body steel SAE #08 ports
1P = pilot port 1/8“ NPTF
1B = pilot port G 1/8“ BSPP
4T = pilot port SAE #4

Related data sheets

Reference	Description
520-P-000050	Form tools
520-P-000120	Cavity C1020
520-P-000121	Threaded port body B1020

Phase-Out

info.us@bucherhydraulics.com www.bucherhydraulics.com

© 2025 by Bucher Hydraulics Inc., Elgin, IL 60124, USA

All rights reserved.
Data is provided for the purpose of product description only, and must not be construed as warranted characteristics in the legal sense. The information does not relieve users from the duty of conducting their own evaluations and tests. Because the products are subject to continual improvement, we reserve the right to amend the product specifications contained in this catalogue.

Cavity Type C1230

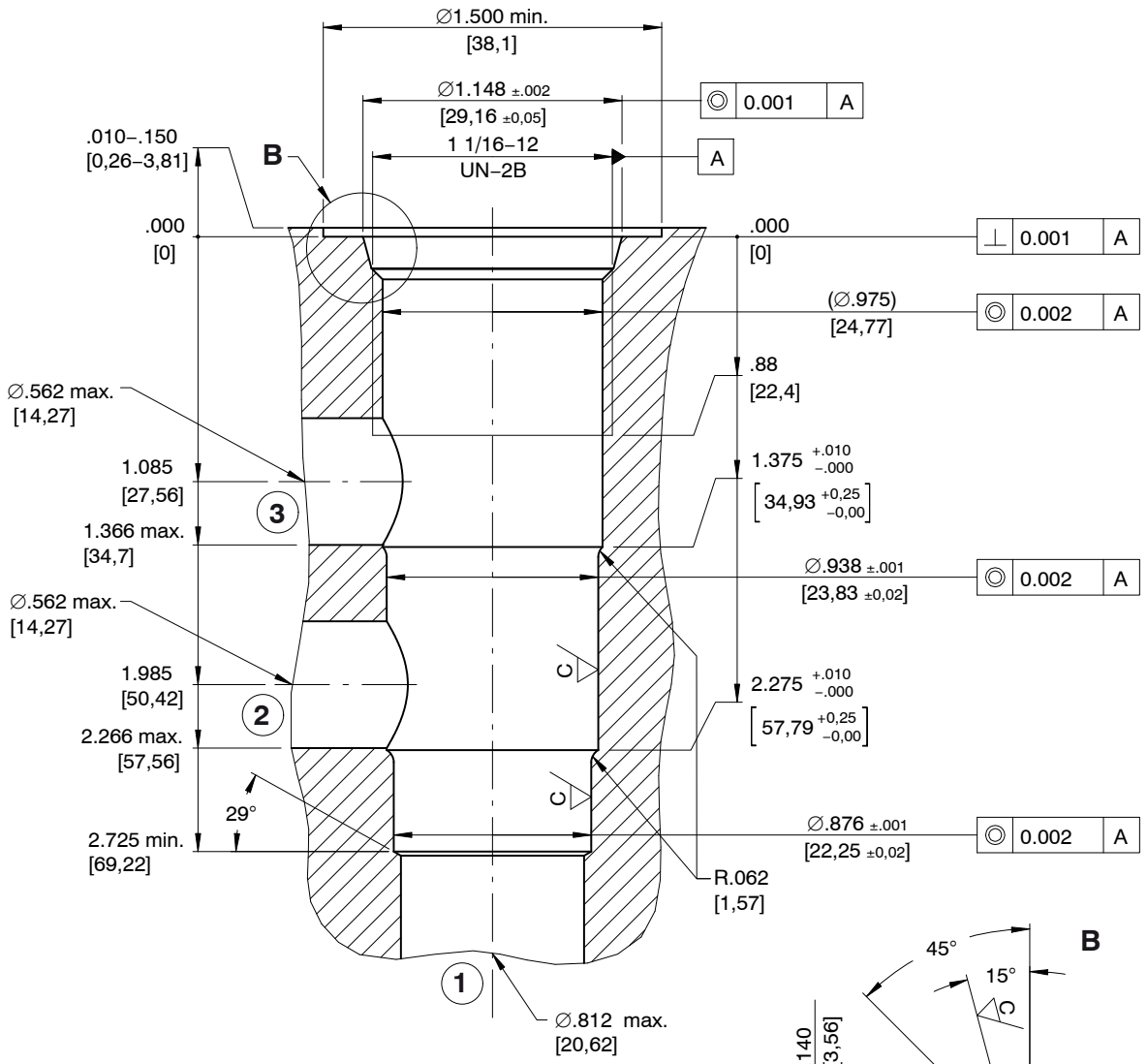

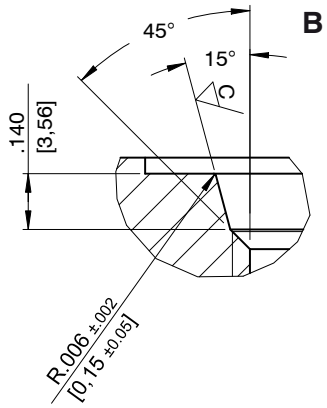

Example dimension unit:		
.010	= .010 "	inch
[0,79]	= 0,79 mm	millimeter

Dimension Tolerances	
Unless otherwise specified	
0.000	± .005″
0.00	± .010″
Angles	± 1/2°

Surface roughness		
Ra	C	D
	45 µin	125 µin
	(1.15 µm)	(3.2 µm)
	D Unless otherwise specified	

Reference: 520-P-000330-EN-01

1 Related data sheets

Reference	(Old no.)	Description
520-P-000050		The form-tool selling programme
520-P-000331	(0–033.1)	Line-mounting body, 12 Series – 3-way

info.el@bucherhydraulics.com www.bucherhydraulics.com/commoncavity

© 2016 by Bucher Hydraulics, Inc., 2545 Northwest Parkway, Elgin, Illinois 60124, USA
All rights reserved.
Data is provided for the purpose of product description only, and must not be construed as warranted characteristics in the legal sense. The information does not relieve users from the duty of conducting their own evaluations and tests. Because the products are subject to continual improvement, we reserve the right to amend the product specifications contained in this catalogue.

Classification: 430.Cavity.…

BUCHER hydraulics
WWW.SUMY.IR

Directional valve 3-way/2-position

Q_{max} = 60 l/min, p_{max} = 350 bar
direct acting, spool type, pneumatical or hydraulical operation
Type series: AODV-12-_-3A-...

- Screw-in cartridge valve
- For cavity C1230
- All external parts zinc plated, chromited (CrVI-free)
- Installation in threaded port body type B1230
- Hardened precision fitted spool and sleeve provides reliable, long life
- Closed center transition
- The non-corrosive piston assembly allows this valve to operate by air or any type of hydraulic fluid
- Control spool is isolated from hydraulic fluid with high pressure seals

Description

This unit is a three-way, two-position, screw-in cartridge style, direct acting, spool type, air or hydraulically operated, spring return, hydraulic directional control valve. When pilot piston is not actuated, this valve allows flow between ports 2 to 1 and port 3 is blocked. When pilot piston is pressurized, the spool in this valve is shifted and allows flow between ports 3 to 2 and port 1 is blocked. This valve shifts in a closed center position. Port 1 can be pressurized to 18.5 × pilot port pressure.

Symbol

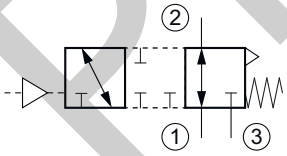

operated by air

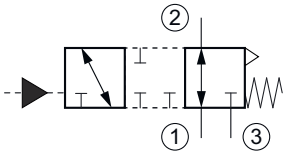

operated by hydraulic fluid

Technical data

General characteristics	Description, value, unit
Product status	Phase-Out
Function group	Directional valve
Function	3-way/2-position

Phase-Out

WWW.SUMY.IR

General characteristics	Description, value, unit
Design	Screw-in cartridge valve
Controls	pneumatical or hydraulical operation
Characteristic	direct acting, spool type
Transition/central position of spool/piston	zero or overlap/positive (closed)
Construction size	NG 10 / SAE 12
Thread size	1 1/16-12 UN-2A
Mounting attitude	unrestricted
Weight	0.31 kg
Cavity acc. factory standard	For cavity C1230
Tightening torque steel	115 Nm
Tightening torque tolerance	± 5 %
Minimum ambient temperature	- 40 °C
Maximum ambient temperature	+ 120 °C
Surface protection	All external parts zinc plated, chromited (CrVI-free)
Sealing material	see ordering code
Seal kit order number	NBR: SKN-1232 / FKM: SKV-1232

Hydraulic characteristics	Description, value, unit
Maximum operating pressure	350 bar
Maximum flow rate	60 l/min
Flow direction	see symbol
Hydraulic fluid	All general purpose hydraulic fluids such as MIL-H-5606, SAE-#10, SAE-#20, etc.
Minimum fluid temperature	- 25 °C
Maximum fluid temperature	+ 80 °C
Viscosity range	10 ... 500 mm^2/s (cSt)
Recommended viscosity range	20 ... 130 mm^2/s (cSt)
Minimum fluid cleanliness (cleanlineless class according to ISO 4406:1999)	class 18/16/13
Pilot piston area ratio to system pressure area	18.5:1
Internal leakage flow rate	82 cc/m at 350 bar
Pilot operating media	compressed air or hydraulic fluid
Pilot pressure	pneumatical: 3.5 ... 17.5 bar / hydraulical: 3.5 ... 70 bar

Phase-Out

BUCHER
hydraulics
WWW.SUMY.IR

Performance graphs

measured with oil viscosity 28.5 mm²/s (cSt)

Δp = f (Q) Pressure drop-flow rate characteristic

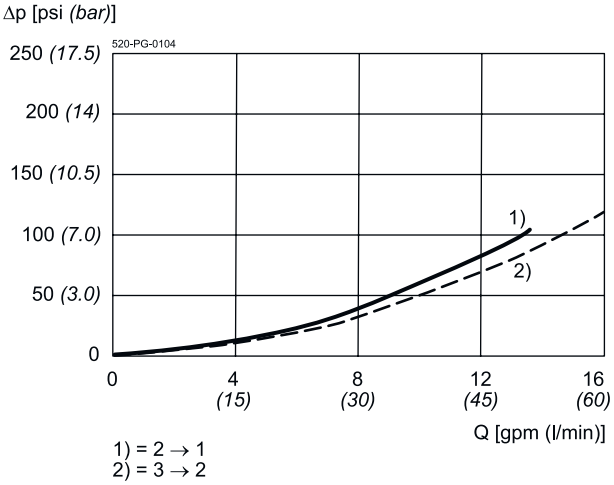

Phase-Out

WWW.SUMY.IR

Dimensions and sectional view

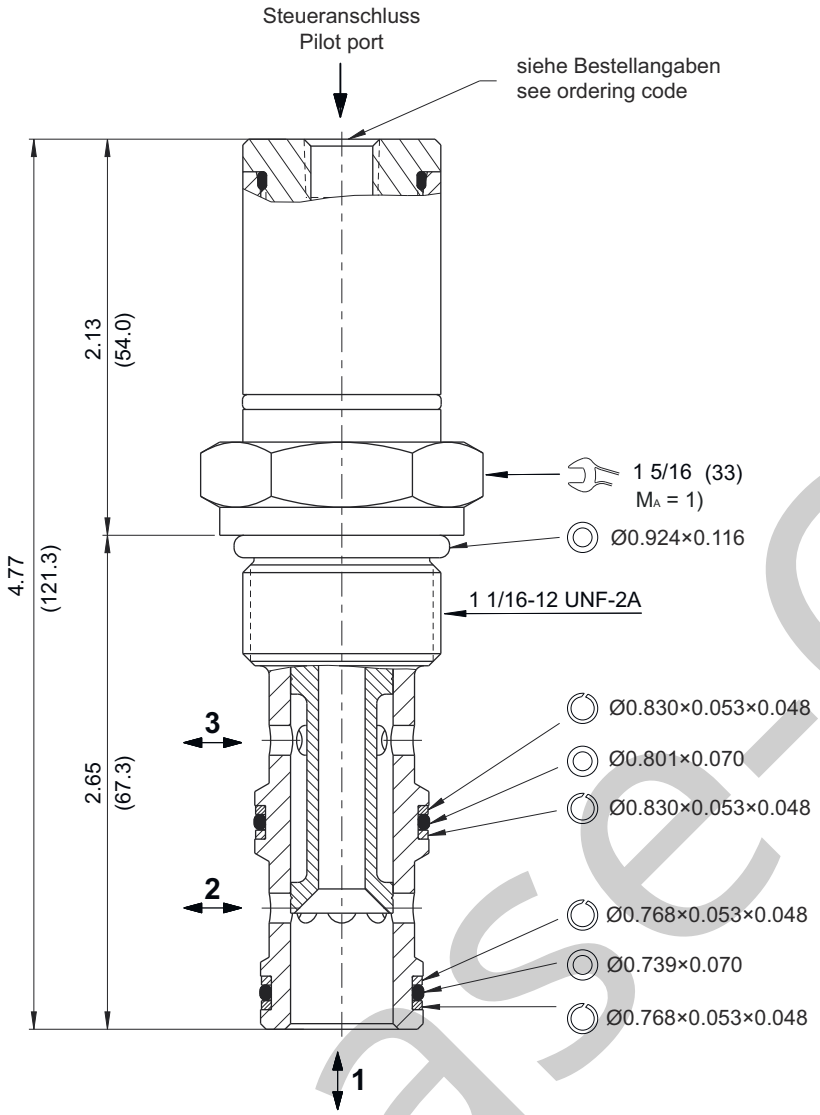

Installation information

ATTENTION!
Only qualified personnel with mechanical skills may carry out any maintenance work. Generally, the only work that should ever be undertaken is to check, and possibly replace, the seals. When changing seals, oil or grease the new seals thoroughly before fitting them.

NOTE!
1) When fitting the screw-in cartridge valve, use the specified tightening torque. The value can be found in the chapter "Technical data".

NOTE!
The seals are not available individually. The seal kit order number can be found in the chapter "Technical data".

Phase-Out

Ordering code

e.g. AODV - 12 - N - 3A - 0 - 1P

AODV = air or hydraulic operated directional control valve

12 = nominal size SAE 12 / NG 10

N = NBR (nitril-butadien-rubber / BUNA) seals *(standard)*
V = FKM (fluorocarbon rubber / VITON) seals
(special seals - please consult BUCHER)

3A = spool type A (3-way/2-position)

0 = screw-in cartridge only
10TA = line-mounting body aluminum SAE #10 ports
10TS = line-mounting body steel SAE #10 ports
12TA = line-mounting body aluminum SAE #12 ports
12TS = line-mounting body steel SAE #12 ports

1P = pilot port 1/8" NPTF
1B = pilot port G 1/8" BSPP
4T = pilot port SAE #4

Related data sheets

Reference	Description
520-P-000050	Form tools
520-P-000330	Cavity C1230
520-P-000331	Threaded port body B1230

Phase-Out

info.us@bucherhydraulics.com www.bucherhydraulics.com

© 2025 by Bucher Hydraulics Inc., Elgin, IL 60124, USA

All rights reserved.
Data is provided for the purpose of product description only, and must not be construed as warranted characteristics in the legal sense. The information does not relieve users from the duty of conducting their own evaluations and tests. Because the products are subject to continual improvement, we reserve the right to amend the product specifications contained in this catalogue.

BUCHER hydraulics
WWW.SUMY.IR

Directional valve 3-way/2-position

Q_{max} = 60 l/min, p_{max} = 350 bar
direct acting, spool type, pneumatical or hydraulical operation
Type series: AODV-12-_-3B-...

- Screw-in cartridge valve
- For cavity C1230
- All external parts zinc plated, chromited (CrVI-free)
- Installation in threaded port body type B1230
- Hardened precision fitted spool and sleeve provides reliable, long life
- Closed center transition
- The non-corrosive piston assembly allows this valve to operate by air or any type of hydraulic fluid
- Control spool is isolated from hydraulic fluid with high pressure seals

Description

This unit is a three-way, two position, screw-in cartridge style, direct acting spool type, air or hydraulically operated, spring return, hydraulic directional control valve. When pilot piston is not actuated, this valve allows flow between ports 2 to 1 and port 3 is blocked. When pilot piston is pressurized, the spool in this valve is shifted and allows flow between ports 3 to 1 and port 2 is blocked. This valve shifts in a closed center position. Port 1 can be pressurized to 18.5 x pilot port pressure.

Symbol

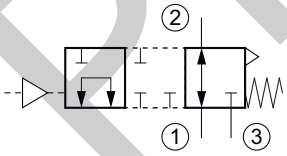

operated by air

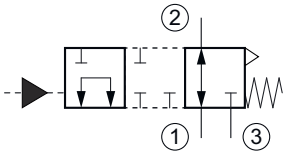

operated by hydraulic fluid

Technical data

General characteristics	Description, value, unit
Product status	Phase-Out
Function group	Directional valve
Function	3-way/2-position

Phase-Out

WWW.SUMY.IR

General characteristics	Description, value, unit
Design	Screw-in cartridge valve
Controls	pneumatical or hydraulical operation
Characteristic	direct acting, spool type
Transition/central position of spool/piston	zero or overlap/positive (closed)
Construction size	NG 10 / SAE 12
Thread size	1 1/16-12 UN-2A
Mounting attitude	unrestricted
Weight	0.31 kg
Cavity acc. factory standard	For cavity C1230
Tightening torque steel	110 Nm
Tightening torque tolerance	± 5 %
Minimum ambient temperature	- 40 °C
Maximum ambient temperature	+ 120 °C
Surface protection	All external parts zinc plated, chromited (CrVI-free)
Sealing material	see ordering code
Seal kit order number	NBR: SKN-1232 / FKM: SKV-1232

Hydraulic characteristics	Description, value, unit
Maximum operating pressure	350 bar
Maximum flow rate	60 l/min
Flow direction	see symbol
Hydraulic fluid	All general purpose hydraulic fluids such as MIL-H-5606, SAE-#10, SAE-#20, etc.
Minimum fluid temperature	- 25 °C
Maximum fluid temperature	+ 80 °C
Viscosity range	10 ... 500 mm^2/s (cSt)
Recommended viscosity range	20 ... 130 mm^2/s (cSt)
Minimum fluid cleanliness (cleanlineless class according to ISO 4406:1999)	class 18/16/13
Pilot piston area ratio to system pressure area	18.5:1
Internal leakage flow rate	82 cc/m at 350 bar
Pilot operating media	compressed air or hydraulic fluid
Pilot pressure	pneumatical: 3.5 ... 17.5 bar / hydraulical: 3.5 ... 70 bar

Phase-Out

BUCHER
hydraulics
WWW.SUMY.IR

Performance graphs

measured with oil viscosity 28.5 mm²/s (cSt)

Δp = f (Q) Pressure drop-flow rate characteristic

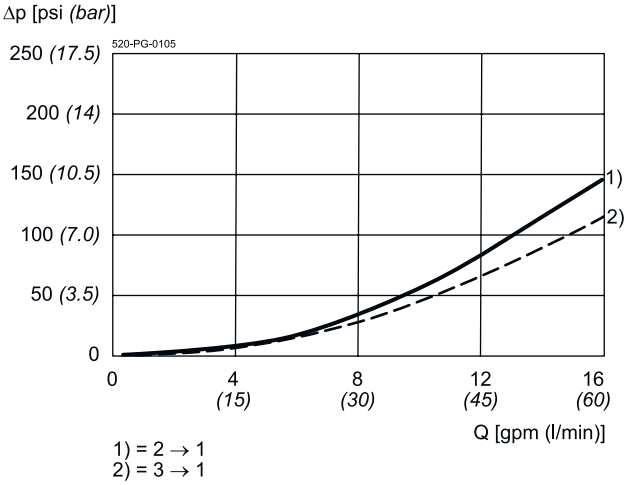

Phase-Out

WWW.SUMY.IR

Dimensions and sectional view

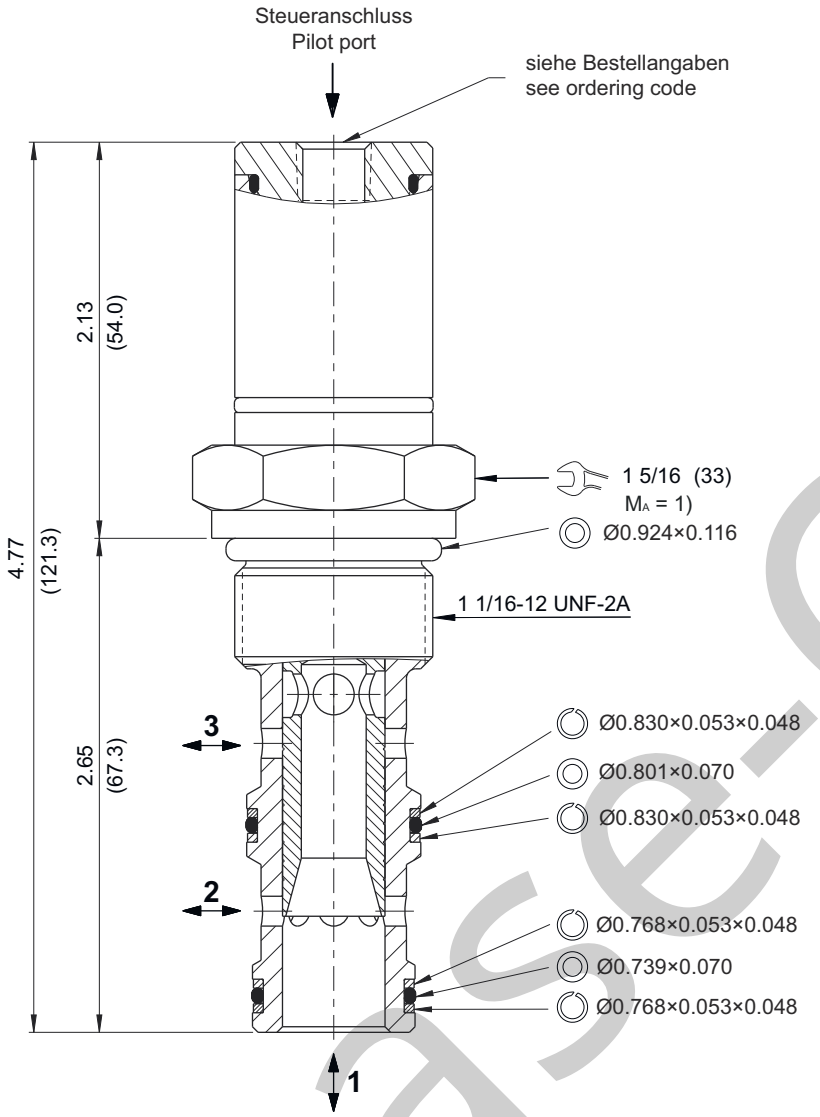

Installation information

ATTENTION!
Only qualified personnel with mechanical skills may carry out any maintenance work. Generally, the only work that should ever be undertaken is to check, and possibly replace, the seals. When changing seals, oil or grease the new seals thoroughly before fitting them.

NOTE!
1) When fitting the screw-in cartridge valve, use the specified tightening torque. The value can be found in the chapter "Technical data".

NOTE!
The seals are not available individually. The seal kit order number can be found in the chapter "Technical data".

Phase-Out

Ordering code

e.g. AODV - 12 - N - 3B - 0 - 4T

AODV = air or hydraulic operated directional control valve

12 = nominal size SAE 12 / NG 10

N = NBR (nitril-butadien-rubber / BUNA) seals *(standard)*
V = FKM (fluorocarbon rubber / VITON) seals
(special seals - please consult BUCHER)

3B = spool type B (3-way/2-position)

0 = screw-in cartridge only
10TA = line-mounting body aluminum SAE #10 ports
10TS = line-mounting body steel SAE #10 ports
12TA = line-mounting body aluminum SAE #12 ports
12TS = line-mounting body steel SAE #12 ports

1P = pilot port 1/8“ NPTF
1B = pilot port G 1/8“ BSPP
4T = pilot port SAE #4

Related data sheets

Reference	Description
520-P-000050	Form tools
520-P-000330	Cavity C1230
520-P-000331	Threaded port body B1230

Phase-Out

info.us@bucherhydraulics.com www.bucherhydraulics.com

© 2025 by Bucher Hydraulics Inc., Elgin, IL 60124, USA

All rights reserved.
Data is provided for the purpose of product description only, and must not be construed as warranted characteristics in the legal sense. The information does not relieve users from the duty of conducting their own evaluations and tests. Because the products are subject to continual improvement, we reserve the right to amend the product specifications contained in this catalogue.

BUCHER hydraulics
WWW.SUMY.IR

Directional valve 3-way/2-position

Q_{max} = 60 l/min, p_{max} = 350 bar
direct acting, spool type, pneumatical or hydraulical operation
Type series: AODV-12-_-3C-...

- Screw-in cartridge valve
- For cavity C1230
- All external parts zinc plated, chromited (CrVI-free)
- Installation in threaded port body type B1230
- Hardened precision fitted spool and sleeve provides reliable, long life
- Open center transition
- The non-corrosive piston assembly allows this valve to operate by air or any type of hydraulic fluid
- Control spool is isolated from hydraulic fluid with high pressure seals

Description

This unit is a three-way, two position, screw-in cartridge style, direct acting spool type, air or hydraulically operated, spring return, hydraulic directional control valve. When pilot piston is not actuated, this valve allows flow between ports 2 to 1 and port 3 is blocked. When pilot piston is pressurized, the spool in this valve is shifted and allows flow between ports 3 to 2 and port 1 is blocked. This valve shifts in a open center position. Port 1 can be pressurized to 18.5 x pilot port pressure.

Symbol

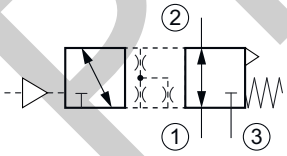

operated by air

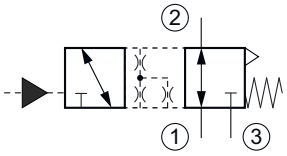

operated by hydraulic fluid

Technical data

General characteristics	Description, value, unit
Product status	Phase-Out
Function group	Directional valve
Function	3-way/2-position

Phase-Out

WWW.SUMY.IR

General characteristics	Description, value, unit
Design	Screw-in cartridge valve
Controls	pneumatical or hydraulical operation
Characteristic	direct acting, spool type
Transition/central position of spool/piston	zero or underlap/negative (open)
Construction size	NG 10 / SAE 12
Thread size	1 1/16-12 UN-2A
Mounting attitude	unrestricted
Weight	0.31 kg
Cavity acc. factory standard	For cavity C1230
Tightening torque steel	110 Nm
Tightening torque tolerance	± 5 %
Minimum ambient temperature	- 40 °C
Maximum ambient temperature	+ 120 °C
Surface protection	All external parts zinc plated, chromited (CrVI-free)
Sealing material	see ordering code
Seal kit order number	NBR: SKN-1232 / FKM: SKV-1232

Hydraulic characteristics	Description, value, unit
Maximum operating pressure	350 bar
Maximum flow rate	60 l/min
Flow direction	see symbol
Hydraulic fluid	All general purpose hydraulic fluids such as MIL-H-5606, SAE-#10, SAE-#20, etc.
Minimum fluid temperature	- 25 °C
Maximum fluid temperature	+ 80 °C
Viscosity range	10 ... 500 mm^2/s (cSt)
Recommended viscosity range	20 ... 130 mm^2/s (cSt)
Minimum fluid cleanliness (cleanlineless class according to ISO 4406:1999)	class 18/16/13
Pilot piston area ratio to system pressure area	18.5:1
Internal leakage flow rate	82 cc/m at 350 bar
Pilot operating media	compressed air or hydraulic fluid
Pilot pressure	pneumatical: 3.5 ... 17.5 bar / hydraulical: 3.5 ... 70 bar

Phase-Out

BUCHER
hydraulics
WWW.SUMY.IR

Performance graphs

measured with oil viscosity 28.5 mm²/s (cSt)

Δp = f (Q) Pressure drop-flow rate characteristic

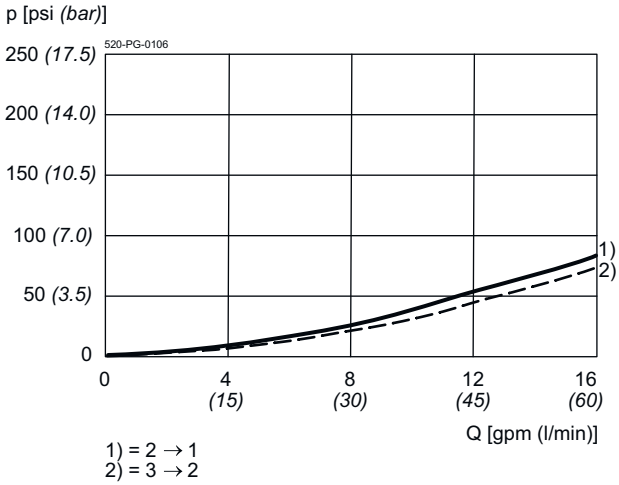

Phase-Out

WWW.SUMY.IR

Dimensions and sectional view

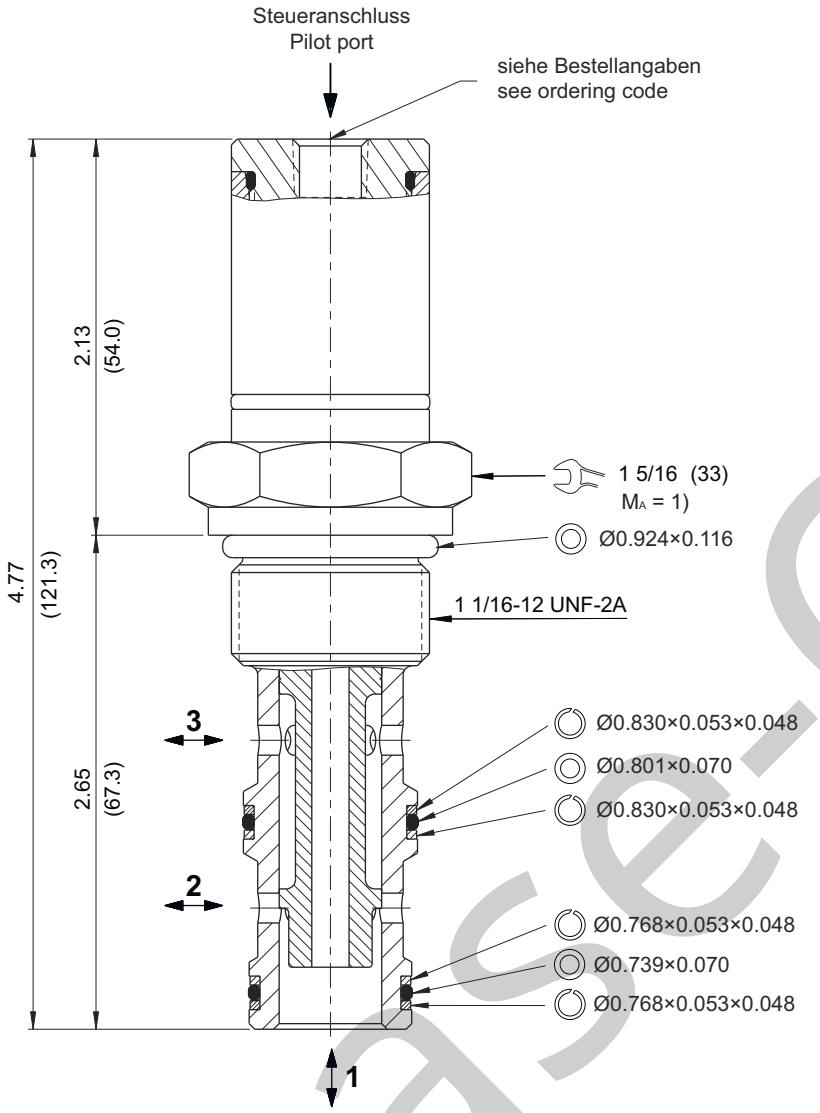

Installation information

ATTENTION!
Only qualified personnel with mechanical skills may carry out any maintenance work. Generally, the only work that should ever be undertaken is to check, and possibly replace, the seals. When changing seals, oil or grease the new seals thoroughly before fitting them.

NOTE!
1) When fitting the screw-in cartridge valve, use the specified tightening torque. The value can be found in the chapter "Technical data".

NOTE!
The seals are not available individually. The seal kit order number can be found in the chapter "Technical data".

Phase-Out

Ordering code

e.g. AODV - 12 - N - 3C - 0 - 4T

AODV = air or hydraulic operated directional control valve

12 = nominal size SAE 12 / NG 10

N = NBR (nitril-butadien-rubber / BUNA) seals *(standard)*
V = FKM (fluorocarbon rubber / VITON) seals
(special seals - please consult BUCHER)

3C = spool type C (3-way/2-position)

0 = screw-in cartridge only
10TA = line-mounting body aluminum SAE #10 ports
10TS = line-mounting body steel SAE #10 ports
12TA = line-mounting body aluminum SAE #12 ports
12TS = line-mounting body steel SAE #12 ports

1P = pilot port 1/8“ NPTF
1B = pilot port G 1/8“ BSPP
4T = pilot port SAE #4

Related data sheets

Reference	Description
520-P-000050	Form tools
520-P-000330	Cavity C1230
520-P-000331	Threaded port body B1230

Phase-Out

info.us@bucherhydraulics.com www.bucherhydraulics.com

© 2025 by Bucher Hydraulics Inc., Elgin, IL 60124, USA

All rights reserved.
Data is provided for the purpose of product description only, and must not be construed as warranted characteristics in the legal sense. The information does not relieve users from the duty of conducting their own evaluations and tests. Because the products are subject to continual improvement, we reserve the right to amend the product specifications contained in this catalogue.

BUCHER hydraulics
WWW.SUMY.IR

Directional valve 3-way/2-position

Q_{max} = 60 l/min, p_{max} = 350 bar
direct acting, spool type, pneumatical or hydraulical operation
Type series: AODV-12-_-3D-...

- Screw-in cartridge valve
- For cavity C1230
- All external parts zinc plated, chromited (CrVI-free)
- Installation in threaded port body type B1230
- Hardened precision fitted spool and sleeve provides reliable, long life
- Open center transition
- The non-corrosive piston assembly allows this valve to operate by air or any type of hydraulic fluid
- Control spool is isolated from hydraulic fluid with high pressure seals

Description

This unit is a three-way, two position, screw-in cartridge style, direct acting spool type, air or hydraulically operated, spring return, hydraulic directional control valve. When pilot piston is not actuated, this valve allows flow between ports 2 to 1 and port 3 is blocked. When pilot piston is pressurized, the spool in this valve is shifted and allows flow between ports 3 to 1 and port 2 is blocked. This valve shifts in a open center position. Port 1 can be pressurized to 18.5 x pilot port pressure.

Symbol

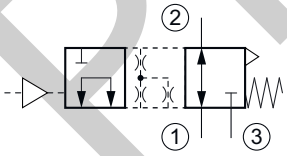

operated by air

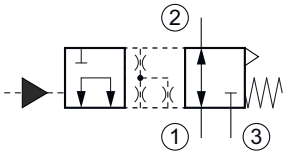

operated by hydraulic fluid

Technical data

General characteristics	Description, value, unit
Product status	Phase-Out
Function group	Directional valve
Function	3-way/2-position

Phase-Out

WWW.SUMY.IR

General characteristics	Description, value, unit
Design	Screw-in cartridge valve
Controls	pneumatical or hydraulical operation
Characteristic	direct acting, spool type
Transition/central position of spool/piston	zero or underlap/negative (open)
Construction size	NG 10 / SAE 12
Thread size	1 1/16-12 UN-2A
Mounting attitude	unrestricted
Weight	0.31 kg
Cavity acc. factory standard	For cavity C1230
Tightening torque steel	110 Nm
Tightening torque tolerance	± 5 %
Minimum ambient temperature	- 40 °C
Maximum ambient temperature	+ 120 °C
Surface protection	All external parts zinc plated, chromited (CrVI-free)
Sealing material	see ordering code
Seal kit order number	NBR: SKN-1232 / FKM: SKV-1232

Hydraulic characteristics	Description, value, unit
Maximum operating pressure	350 bar
Maximum flow rate	60 l/min
Flow direction	see symbol
Hydraulic fluid	All general purpose hydraulic fluids such as MIL-H-5606, SAE-#10, SAE-#20, etc.
Minimum fluid temperature	- 25 °C
Maximum fluid temperature	+ 80 °C
Viscosity range	10 ... 500 mm^2/s (cSt)
Recommended viscosity range	20 ... 130 mm^2/s (cSt)
Minimum fluid cleanliness (cleanlineless class according to ISO 4406:1999)	class 18/16/13
Pilot piston area ratio to system pressure area	18.5:1
Internal leakage flow rate	82 cc/m at 350 bar
Pilot operating media	compressed air or hydraulic fluid
Pilot pressure	pneumatical: 3.5 ... 17.5 bar / hydraulical: 3.5 ... 70 bar

Phase-Out

BUCHER hydraulics
WWW.SUMY.IR

Performance graphs

measured with oil viscosity 28.5 mm²/s (cSt)

Δp = f (Q) Pressure drop-flow rate characteristic

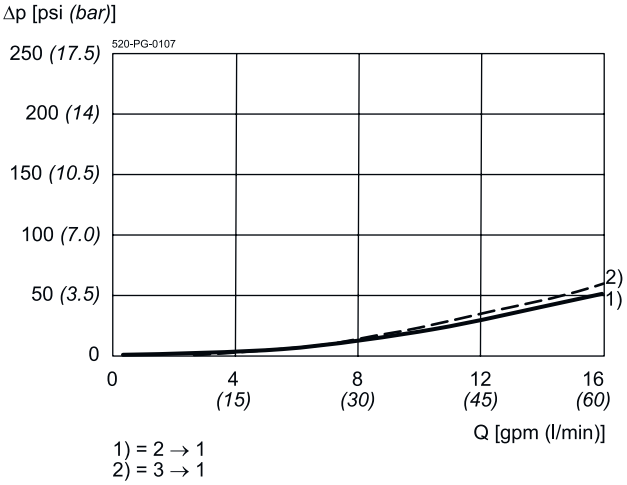

Phase-Out

WWW.SUMY.IR

Dimensions and sectional view

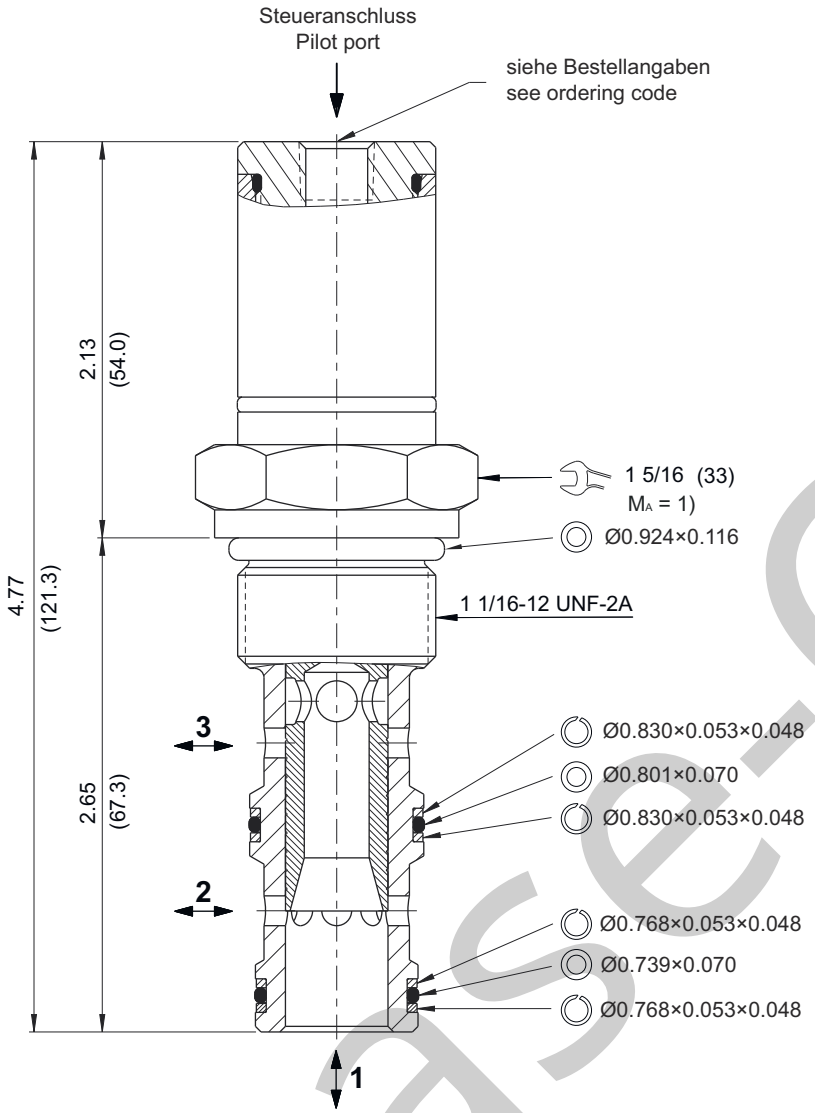

Installation information

ATTENTION!
Only qualified personnel with mechanical skills may carry out any maintenance work. Generally, the only work that should ever be undertaken is to check, and possibly replace, the seals. When changing seals, oil or grease the new seals thoroughly before fitting them.

NOTE!
1) When fitting the screw-in cartridge valve, use the specified tightening torque. The value can be found in the chapter "Technical data".

NOTE!
The seals are not available individually. The seal kit order number can be found in the chapter "Technical data".

Phase-Out

Ordering code

e.g. AODV - 12 - N - 3D - 0 - 4T

AODV = air and hydraulic operated directional control valve

12 = nominal size SAE 12 / NG 10

N = NBR (nitril-butadien-rubber / BUNA) seals *(standard)*
V = FKM (fluorocarbon rubber / VITON) seals
(special seals - please consult BUCHER)

3D = spool type D (3-way/2-position)

0 = screw-in cartridge only
10TA = line-mounting body aluminum SAE #10 ports
10TS = line-mounting body steel SAE #10 ports
12TA = line-mounting body aluminum SAE #12 ports
12TS = line-mounting body steel SAE #12 ports

1P = pilot port 1/8“ NPTF
1B = pilot port G 1/8“ BSPP
4T = pilot port SAE #4

Related data sheets

Reference	Description
520-P-000050	Form tools
520-P-000330	Cavity C1230
520-P-000331	Threaded port body B1230

Phase-Out

info.us@bucherhydraulics.com www.bucherhydraulics.com

© 2025 by Bucher Hydraulics Inc., Elgin, IL 60124, USA

All rights reserved.
Data is provided for the purpose of product description only, and must not be construed as warranted characteristics in the legal sense. The information does not relieve users from the duty of conducting their own evaluations and tests. Because the products are subject to continual improvement, we reserve the right to amend the product specifications contained in this catalogue.

BUCHER hydraulics
WWW.SUMY.IR

Directional valve 4-way/2-position

Q_{max} = 60 l/min, p_{max} = 350 bar
direct acting, spool type, pneumatical or hydraulical operation
Type series: AODV-12-_-4A-...

- Screw-in cartridge valve
- For cavity C1240
- All external parts zinc plated, chromited (CrVI-free)
- Installation in threaded port body type B1240
- Hardened precision fitted spool and sleeve provides reliable, long life
- Closed center transition
- The non-corrosive piston assembly allows this valve to operate by air or any type of hydraulic fluid
- Control spool is isolated from hydraulic fluid with high pressure seals

Description

This unit is a four-way, two position, screw-in cartridge style, direct acting spool type, air or hydraulically operated, spring return, hydraulic directional control valve. When pilot piston is not actuated, this valve allows flow between ports 1 to 2 and ports 3 to 4. When pilot piston is pressurized, the spool in this valve is shifted and allows flow between ports 2 to 3 and ports 1 to 4. This valve shifts in a closed center position. Port 1 can be pressurized to 18.5 x pilot port pressure.

Symbol

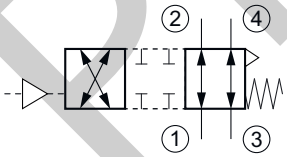

operated by air

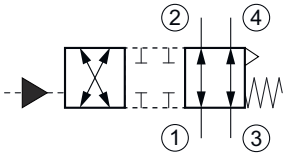

operated by hydraulic fluid

Technical data

General characteristics	Description, value, unit
Product status	Phase-Out
Function group	Directional valve
Function	4-way/2-position

Phase-Out

WWW.SUMY.IR

General characteristics	Description, value, unit
Design	Screw-in cartridge valve
Controls	pneumatical or hydraulical operation
Characteristic	direct acting, spool type
Transition/central position of spool/piston	zero or overlap/positive (closed)
Construction size	NG 10 / SAE 12
Thread size	1 1/16-12 UN-2A
Mounting attitude	unrestricted
Weight	0.34 kg
Cavity acc. factory standard	For cavity C1240
Tightening torque steel	110 Nm
Tightening torque tolerance	± 5 %
Minimum ambient temperature	- 40 °C
Maximum ambient temperature	+ 120 °C
Surface protection	All external parts zinc plated, chromited (CrVI-free)
Sealing material	see ordering code
Seal kit order number	NBR: SKN-1242 / FKM: SKV-1242

Hydraulic characteristics	Description, value, unit
Maximum operating pressure	350 bar
Maximum flow rate	60 l/min
Flow direction	see symbol
Hydraulic fluid	All general purpose hydraulic fluids such as MIL-H-5606, SAE-#10, SAE-#20, etc.
Minimum fluid temperature	- 25 °C
Maximum fluid temperature	+ 80 °C
Viscosity range	10 ... 500 mm^2/s (cSt)
Recommended viscosity range	20 ... 130 mm^2/s (cSt)
Minimum fluid cleanliness (cleanlineless class according to ISO 4406:1999)	class 18/16/13
Pilot piston area ratio to system pressure area	18.5:1
Internal leakage flow rate	82 cc/min at 350 bar
Pilot operating media	compressed air or hydraulic fluid
Pilot pressure	pneumatical: 3.5 ... 17.5 bar / hydraulical: 3.5 ... 70 bar

Phase-Out

BUCHER hydraulics
WWW.SUMY.IR

Performance graphs

measured with oil viscosity 28.5 mm²/s (cSt)

Δp = f (Q) Pressure drop-flow rate characteristic

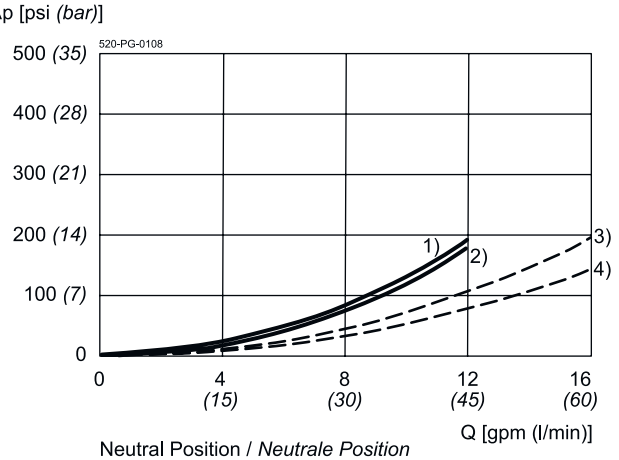

Neutral Position / *Neutrale Position*
1) = 3 → 4
2) = 2 → 1

Piloted Position / *Gesteuerte Position*
3) = 3 → 2
4) = 4 → 1

Phase-Out

WWW.SUMY.IR

Dimensions and sectional view

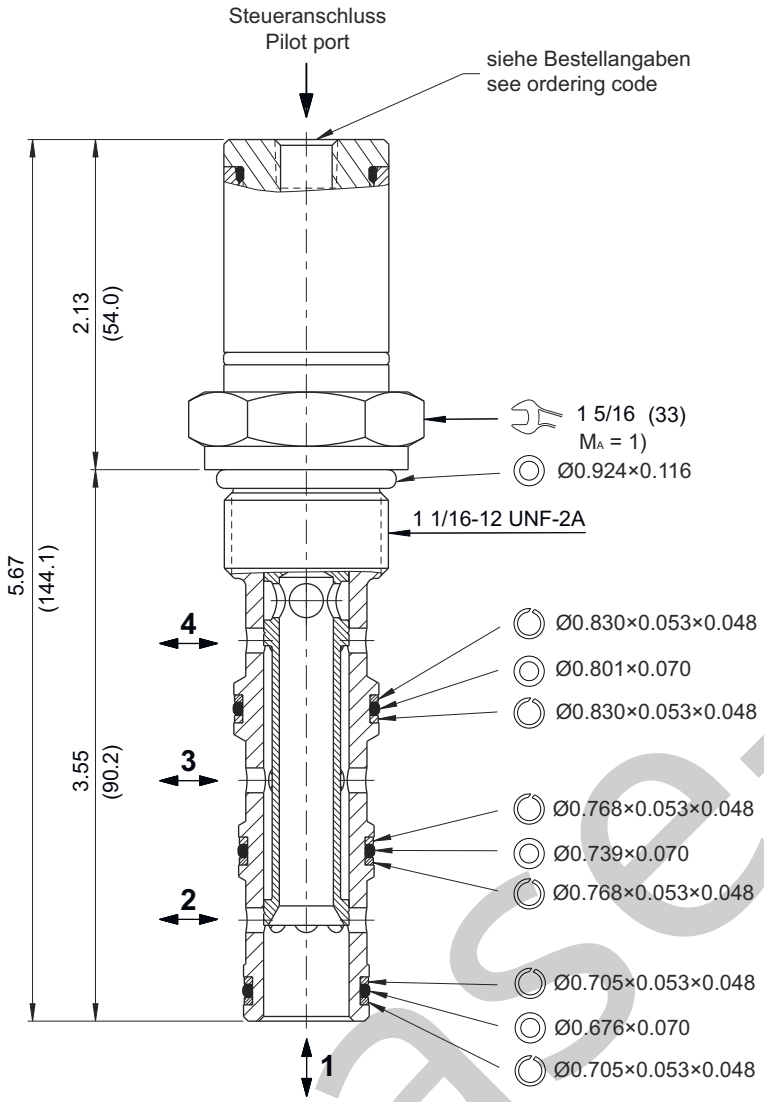

Installation information

ATTENTION!
Only qualified personnel with mechanical skills may carry out any maintenance work. Generally, the only work that should ever be undertaken is to check, and possibly replace, the seals. When changing seals, oil or grease the new seals thoroughly before fitting them.

NOTE!
1) When fitting the screw-in cartridge valve, use the specified tightening torque. The value can be found in the chapter "Technical data".

NOTE!
The seals are not available individually. The seal kit order number can be found in the chapter "Technical data".

Phase-Out

Ordering code

e.g. AODV - 12 - N - 4A - 0 - 4T

AODV = air or hydraulic operated directional control valve

12 = nominal size SAE 12 / NG 10

N = NBR (nitril-butadien-rubber / BUNA) seals *(standard)*
V = FKM (fluorocarbon rubber / VITON) seals
(special seals - please consult BUCHER)

4A = spool type A (4-way/2-position)

0 = screw-in cartridge only
10TA = line-mounting body aluminum SAE #10 ports
10TS = line-mounting body steel SAE #10 ports
12TA = line-mounting body aluminum SAE #12 ports
12TS = line-mounting body steel SAE #12 ports

1P = pilot port 1/8“ NPTF
1B = pilot port G 1/8“ BSPP
4T = pilot port SAE #4

Related data sheets

Reference	Description
520-P-000050	Form tools
520-P-000430	Cavity C1240
520-P-000431	Threaded port body B1240

Phase-Out

info.us@bucherhydraulics.com www.bucherhydraulics.com

© 2025 by Bucher Hydraulics Inc., Elgin, IL 60124, USA

All rights reserved.
Data is provided for the purpose of product description only, and must not be construed as warranted characteristics in the legal sense. The information does not relieve users from the duty of conducting their own evaluations and tests. Because the products are subject to continual improvement, we reserve the right to amend the product specifications contained in this catalogue.

BUCHER hydraulics
WWW.SUMY.IR

Directional valve 4-way/2-position

Q_{max} = 60 l/min, p_{max} = 350 bar
direct acting, spool type, pneumatical or hydraulical operation
Type series: AODV-12-_-4B-...

- Screw-in cartridge valve
- For cavity C1240
- All external parts zinc plated, chromited (CrVI-free)
- Installation in threaded port body type B1240
- Hardened precision fitted spool and sleeve provides reliable, long life
- Closed center transition
- The non-corrosive piston assembly allows this valve to operate by air or any type of hydraulic fluid
- Control spool is isolated from hydraulic fluid with high pressure seals

Description

This unit is a four-way, two position, screw-in cartridge style, direct acting spool type, air or hydraulically operated, spring return, hydraulic directional control valve. When pilot piston is not actuated, this valve allows no flow between ports 1 to 2 and ports 3 to 4. When pilot piston is pressurized, the spool in this valve is shifted and allows flow between ports 1 to 2 and ports 3 to 4. This is a normally closed four-way selector valve. Port 1 can be pressurized to 18.5 x pilot port pressure.

Symbol

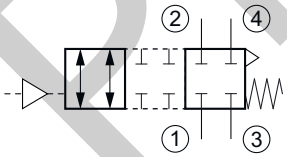

operated by air

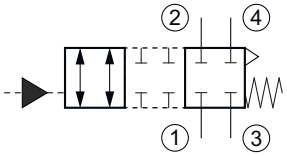

operated by hydraulic fluid

Technical data

General characteristics	Description, value, unit
Product status	Phase-Out
Function group	Directional valve
Function	4-way/2-position

Phase-Out

WWW.SUMY.IR

General characteristics	Description, value, unit
Design	Screw-in cartridge valve
Controls	pneumatical or hydraulical operation
Characteristic	direct acting, spool type
Transition/central position of spool/piston	zero or overlap/positive (closed)
Construction size	NG 10 / SAE 12
Thread size	1 1/16-12 UN-2A
Mounting attitude	unrestricted
Weight	0.34 kg
Cavity acc. factory standard	For cavity C1240
Tightening torque steel	110 Nm
Tightening torque tolerance	± 5 %
Minimum ambient temperature	- 40 °C
Maximum ambient temperature	+ 120 °C
Surface protection	All external parts zinc plated, chromited (CrVI-free)
Sealing material	see ordering code
Seal kit order number	NBR: SKN-1242 / FKM: SKV-1242

Hydraulic characteristics	Description, value, unit
Maximum operating pressure	350 bar
Maximum flow rate	60 l/min
Flow direction	see symbol
Hydraulic fluid	All general purpose hydraulic fluids such as MIL-H-5606, SAE-#10, SAE-#20, etc.
Minimum fluid temperature	- 25 °C
Maximum fluid temperature	+ 80 °C
Viscosity range	10 ... 500 mm^2/s (cSt)
Recommended viscosity range	20 ... 130 mm^2/s (cSt)
Minimum fluid cleanliness (cleanlineless class according to ISO 4406:1999)	class 18/16/13
Pilot piston area ratio to system pressure area	18.5:1
Internal leakage flow rate	82 cc/m at 350 bar
Pilot operating media	compressed air or hydraulic fluid
Pilot pressure	pneumatical: 3.5 ... 17.5 bar / hydraulical: 3.5 ... 70 bar

Phase-Out

Performance graphs

measured with oil viscosity 28.5 mm²/s (cSt)

Δp = f (Q) Pressure drop-flow rate characteristic

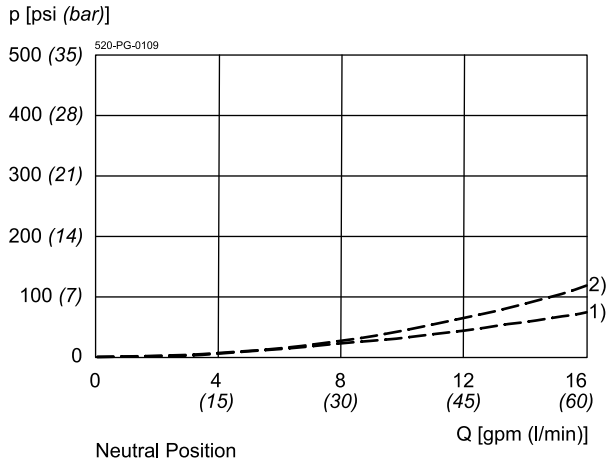

Neutral Position
- All Ports Blocked

Piloted Position
1) = 3 → 4
2) = 2 → 1

Phase-Out

Dimensions and sectional view

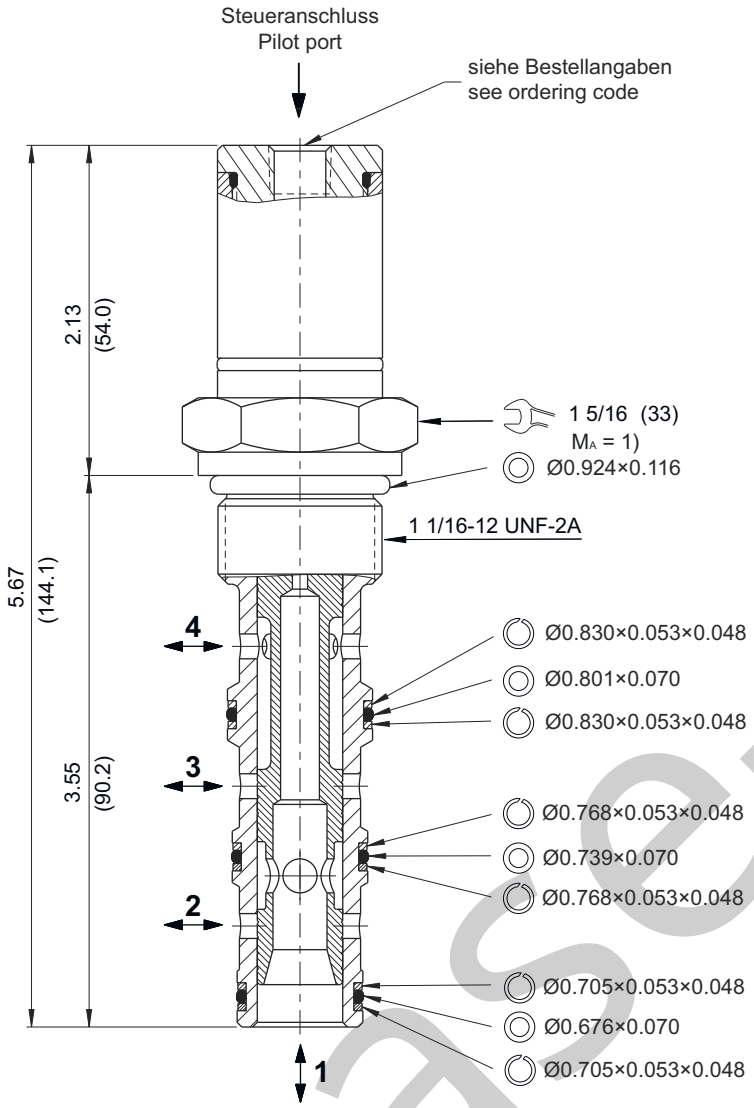

Installation information

ATTENTION!
Only qualified personnel with mechanical skills may carry out any maintenance work. Generally, the only work that should ever be undertaken is to check, and possibly replace, the seals. When changing seals, oil or grease the new seals thoroughly before fitting them.

NOTE!
1) When fitting the screw-in cartridge valve, use the specified tightening torque. The value can be found in the chapter "Technical data".

NOTE!
The seals are not available individually. The seal kit order number can be found in the chapter "Technical data".

Phase-Out

Ordering code

e.g. AODV - 12 - N - 4B - 0 - 4T

AODV = air or hydraulic operated directional control valve

12 = nominal size SAE 12 / NG 10

N = NBR (nitril-butadien-rubber / BUNA) seals *(standard)*
V = FKM (fluorocarbon rubber / VITON) seals
(special seals - please consult BUCHER)

4B = spool type B (4-way/2-position)

0 = screw-in cartridge only
10TA = line-mounting body aluminum SAE #10 ports
10TS = line-mounting body steel SAE #10 ports
12TA = line-mounting body aluminum SAE #12 ports
12TS = line-mounting body steel SAE #12 ports

1P = pilot port 1/8“ NPTF
1B = pilot port G 1/8“ BSPP
4T = pilot port SAE #4

Related data sheets

Reference	Description
520-P-000050	Form tools
520-P-000430	Cavity C1240
520-P-000431	Threaded port body B1240

Phase-Out

info.us@bucherhydraulics.com www.bucherhydraulics.com

© 2025 by Bucher Hydraulics Inc., Elgin, IL 60124, USA

All rights reserved.
Data is provided for the purpose of product description only, and must not be construed as warranted characteristics in the legal sense. The information does not relieve users from the duty of conducting their own evaluations and tests. Because the products are subject to continual improvement, we reserve the right to amend the product specifications contained in this catalogue.

BUCHER hydraulics
WWW.SUMY.IR

Directional valve 4-way/2-position

Q_{max} = 60 l/min, p_{max} = 350 bar
direct acting, spool type, pneumatical or hydraulical operation
Type series: AODV-12-_-4C-...

- Screw-in cartridge valve
- For cavity C1240
- All external parts zinc plated, chromited (CrVI-free)
- Installation in threaded port body type B1240
- Hardened precision fitted spool and sleeve provides reliable, long life
- Closed center transition
- The non-corrosive piston assembly allows this valve to operate by air or any type of hydraulic fluid
- Control spool is isolated from hydraulic fluid with high pressure seals

Description

This unit is a four-way, two position, screw-in cartridge style, direct acting spool type, air or hydraulically operated, spring return, hydraulic directional control valve. When pilot piston is not actuated, this valve allows flow between ports 1 to 2 and ports 3 to 4. When pilot piston is pressurized, the spool in this valve is shifted and allows no flow between ports 1 to 2 and ports 3 to 4. This is a normally open four-way selector valve. Port 1 can be pressurized to 18.5 x pilot port pressure.

Symbol

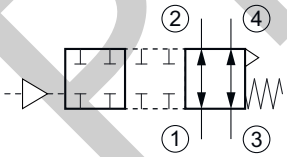

operated by air

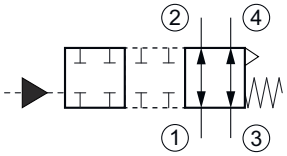

operated by hydraulic fluid

Technical data

General characteristics	Description, value, unit
Product status	Phase-Out
Function group	Directional valve
Function	4-way/2-position

Phase-Out

WWW.SUMY.IR

General characteristics	Description, value, unit
Design	Screw-in cartridge valve
Controls	pneumatical or hydraulical operation
Characteristic	direct acting, spool type
Transition/central position of spool/piston	zero or overlap/positive (closed)
Construction size	NG 10 / SAE 12
Thread size	1 1/16-12 UN-2A
Mounting attitude	unrestricted
Weight	0.34 kg
Cavity acc. factory standard	For cavity C1240
Tightening torque steel	110 Nm
Tightening torque tolerance	± 5 %
Minimum ambient temperature	- 40 °C
Maximum ambient temperature	+ 120 °C
Surface protection	All external parts zinc plated, chromited (CrVI-free)
Sealing material	see ordering code
Seal kit order number	NBR: SKN-1242 / FKM: SKV-1242

Hydraulic characteristics	Description, value, unit
Maximum operating pressure	350 bar
Maximum flow rate	60 l/min
Flow direction	see symbol
Hydraulic fluid	All general purpose hydraulic fluids such as MIL-H-5606, SAE-#10, SAE-#20, etc.
Minimum fluid temperature	- 25 °C
Maximum fluid temperature	+ 80 °C
Viscosity range	10 ... 500 mm^2/s (cSt)
Recommended viscosity range	20 ... 130 mm^2/s (cSt)
Minimum fluid cleanliness (cleanlineless class according to ISO 4406:1999)	class 18/16/13
Pilot piston area ratio to system pressure area	18.5:1
Internal leakage flow rate	82 cc/min at 350 bar
Pilot operating media	compressed air or hydraulic fluid
Pilot pressure	pneumatical: 3.5 ... 17.5 bar / hydraulical: 3.5 ... 70 bar

Phase-Out

BUCHER
hydraulics
WWW.SUMY.IR

Performance graphs

measured with oil viscosity 28.5 mm²/s (cSt)

Δp = f (Q) Pressure drop-flow rate characteristic

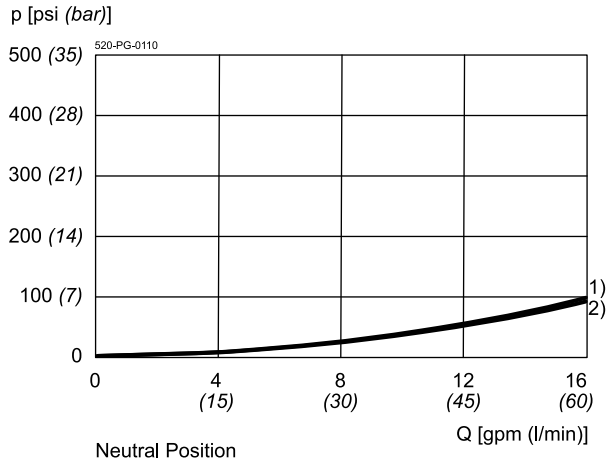

Neutral Position
1) = 3 → 4
2) = 2 → 1

Piloted Position
- All Ports Blocked

Phase-Out

WWW.SUMY.IR

Dimensions and sectional view

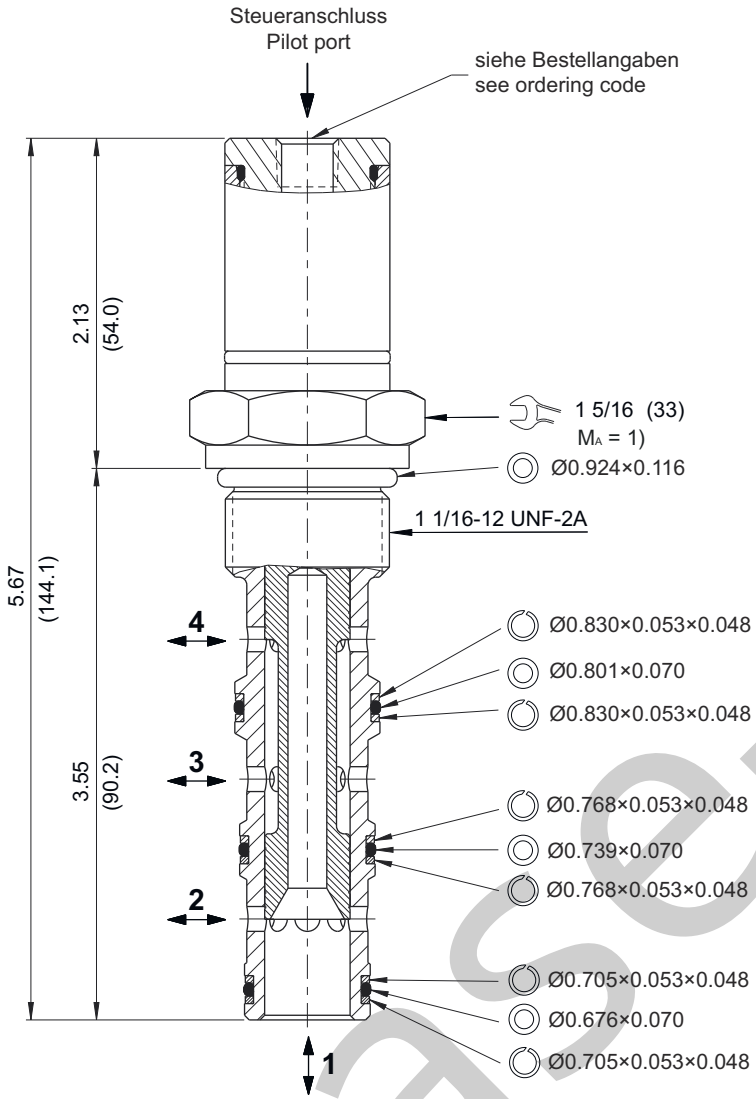

Installation information

ATTENTION!
Only qualified personnel with mechanical skills may carry out any maintenance work. Generally, the only work that should ever be undertaken is to check, and possibly replace, the seals. When changing seals, oil or grease the new seals thoroughly before fitting them.

NOTE!
1) When fitting the screw-in cartridge valve, use the specified tightening torque. The value can be found in the chapter "Technical data".

NOTE!
The seals are not available individually. The seal kit order number can be found in the chapter "Technical data".

Phase-Out

Ordering code

e.g. AODV - 12 - N - 4C - 0 - 4T

AODV = air or hydraulic operated directional control valve

12 = nominal size SAE 12 / NG 10

N = NBR (nitril-butadien-rubber / BUNA) seals *(standard)*
V = FKM (fluorocarbon rubber / VITON) seals
(special seals - please consult BUCHER)

4C = spool type C (4-way/2-position)

0 = screw-in cartridge only
06TA = line-mounting body aluminum SAE #10 ports
06TS = line-mounting body steel SAE #10 ports
08TA = line-mounting body aluminum SAE #12 ports
08TS = line-mounting body steel SAE #12 ports

1P = pilot port 1/8“ NPTF
1B = pilot port G 1/8“ BSPP
4T = pilot port SAE #4

Related data sheets

Reference	Description
520-P-000050	Form tools
520-P-000430	Cavity C1240
520-P-000431	Threaded port body B1240

Phase-Out

info.us@bucherhydraulics.com www.bucherhydraulics.com

© 2025 by Bucher Hydraulics Inc., Elgin, IL 60124, USA

All rights reserved.
Data is provided for the purpose of product description only, and must not be construed as warranted characteristics in the legal sense. The information does not relieve users from the duty of conducting their own evaluations and tests. Because the products are subject to continual improvement, we reserve the right to amend the product specifications contained in this catalogue.

BUCHER hydraulics
WWW.SUMY.IR

Directional valve 4-way/2-position

Q_{max} = 60 l/min, p_{max} = 350 bar
direct acting, spool type, pneumatical or hydraulical operation
Type series: AODV-12-_-4D-...

- Screw-in cartridge valve
- For cavity C1240
- All external parts zinc plated, chromited (CrVI-free)
- Installation in threaded port body type B1240
- Hardened precision fitted spool and sleeve provides reliable, long life
- Open center transition
- The non-corrosive piston assembly allows this valve to operate by air or any type of hydraulic fluid
- Control spool is isolated from hydraulic fluid with high pressure seals

Description

This unit is a four-way, two position, screw-in cartridge style, direct acting spool type, air or hydraulically operated, spring return, hydraulic directional control valve. When pilot piston is not actuated, this valve allows flow between ports 1 to 3 and ports 2 and 4 are blocked. When pilot piston is pressurized, the spool in this valve is shifted and allows flow between ports 1 to 2 and ports 3 to 4. This is a tandem center four-way directional valve. Port 1 can be pressurized to 18.5 x pilot port pressure.

Symbol

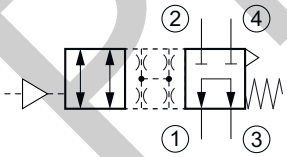

operated by air

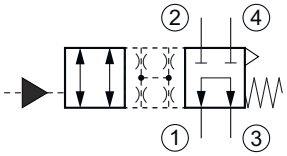

operated by hydraulic fluid

Technical data

General characteristics	Description, value, unit
Product status	Phase-Out
Function group	Directional valve
Function	4-way/2-position

Phase-Out

WWW.SUMY.IR

General characteristics	Description, value, unit
Design	Screw-in cartridge valve
Controls	pneumatical or hydraulical operation
Characteristic	direct acting, spool type
Transition/central position of spool/piston	zero or underlap/negative (open)
Construction size	NG 10 / SAE 12
Thread size	1 1/16-12 UN-2A
Mounting attitude	unrestricted
Weight	0.34 kg
Cavity acc. factory standard	For cavity C1240
Tightening torque steel	110 Nm
Tightening torque tolerance	± 5 %
Minimum ambient temperature	- 40 °C
Maximum ambient temperature	+ 120 °C
Surface protection	All external parts zinc plated, chromited (CrVI-free)
Sealing material	see ordering code
Seal kit order number	NBR: SKN-1242 / FKM: SKV-1242

Hydraulic characteristics	Description, value, unit
Maximum operating pressure	350 bar
Maximum flow rate	60 l/min
Flow direction	see symbol
Hydraulic fluid	All general purpose hydraulic fluids such as MIL-H-5606, SAE-#10, SAE-#20, etc.
Minimum fluid temperature	- 25 °C
Maximum fluid temperature	+ 80 °C
Viscosity range	10 ... 500 mm^2/s (cSt)
Recommended viscosity range	20 ... 130 mm^2/s (cSt)
Minimum fluid cleanliness (cleanlineless class according to ISO 4406:1999)	class 18/16/13
Pilot piston area ratio to system pressure area	18.5:1
Internal leakage flow rate	82 cc/m at 350 bar
Pilot operating media	compressed air or hydraulic fluid
Pilot pressure	pneumatical: 3.5 ... 17.5 bar / hydraulical: 3.5 ... 70 bar

Phase-Out

WWW.SUMY.IR

Performance graphs

measured with oil viscosity 28.5 mm²/s (cSt)

Δp = f (Q) Pressure drop-flow rate characteristic

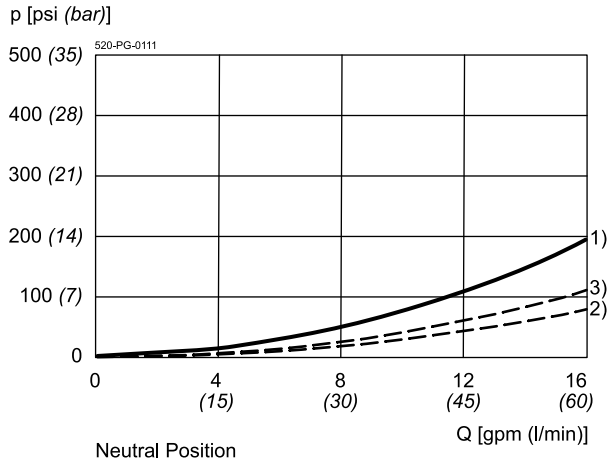

Neutral Position
1) = 3 → 1

Piloted Position
2) = 3 → 4
3) = 2 → 1

Phase-Out

WWW.SUMY.IR

Dimensions and sectional view

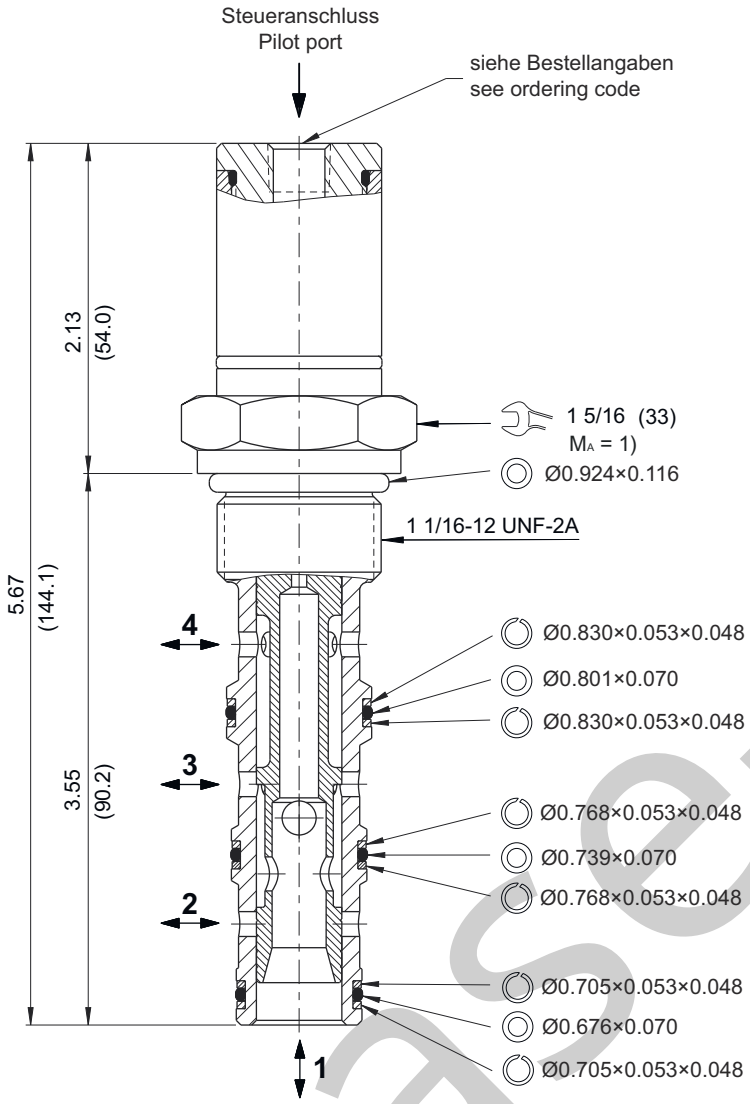

Installation information

ATTENTION!
Only qualified personnel with mechanical skills may carry out any maintenance work. Generally, the only work that should ever be undertaken is to check, and possibly replace, the seals. When changing seals, oil or grease the new seals thoroughly before fitting them.

NOTE!
1) When fitting the screw-in cartridge valve, use the specified tightening torque. The value can be found in the chapter "Technical data".

NOTE!
The seals are not available individually. The seal kit order number can be found in the chapter "Technical data".

Phase-Out

Ordering code

e.g. AODV - 12 - N - 4D - 0 - 4T

AODV = air or hydraulic operated directional control valve

12 = nominal size SAE 12 / NG 10

N = NBR (nitril-butadien-rubber / BUNA) seals *(standard)*
V = FKM (fluorocarbon rubber / VITON) seals
(special seals - please consult BUCHER)

4D = spool type D (4-way/2-position)

0 = screw-in cartridge only
06TA = line-mounting body aluminum SAE #06 ports
06TS = line-mounting body steel SAE #06 ports
08TA = line-mounting body aluminum SAE #08 ports
08TS = line-mounting body steel SAE #08 ports

1P = pilot port 1/8“ NPTF
1B = pilot port G 1/8“ BSPP
4T = pilot port SAE #4

Related data sheets

Reference	Description
520-P-000050	Form tools
520-P-000430	Cavity C1240
520-P-000431	Threaded port body B1240

Phase-Out

info.us@bucherhydraulics.com www.bucherhydraulics.com

© 2025 by Bucher Hydraulics Inc., Elgin, IL 60124, USA

All rights reserved.
Data is provided for the purpose of product description only, and must not be construed as warranted characteristics in the legal sense. The information does not relieve users from the duty of conducting their own evaluations and tests. Because the products are subject to continual improvement, we reserve the right to amend the product specifications contained in this catalogue.

BUCHER hydraulics

MANUAL VALVE
PUSH TO CLOSE

WWW.SUMY.IR

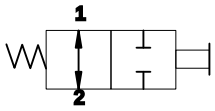

TORQUE:
Steel = 55/60 Ft–Lb. [74/81 Nm]
Aluminum = 35/40 Ft–Lb. [47/54 Nm]

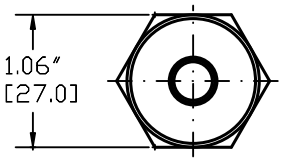

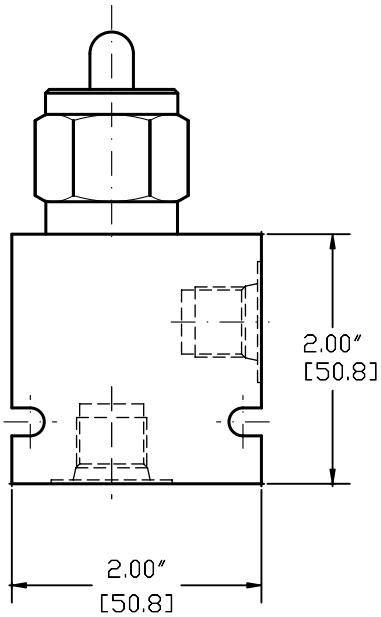

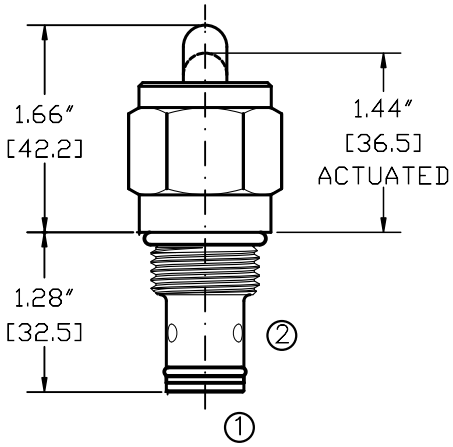

FOR ALUMINUM OR STEEL VALVE HOUSING CONFIGURATIONS SEE PAGE 0–012.1

MPTC–10–X–X

BASIC

SIZE
10 = 7/8"–14UNF

SEALS
N = BUNA "N"
V = VITON

PORTS = CARTRIDGE ONLY
0 = G 1/4" BSPP
02BX = G 3/8" BSPP
03BX = SAE – #6
06TX = SAE – #8
08TX "A" = ALUM. HOUSING
"S" = STEEL HOUSING

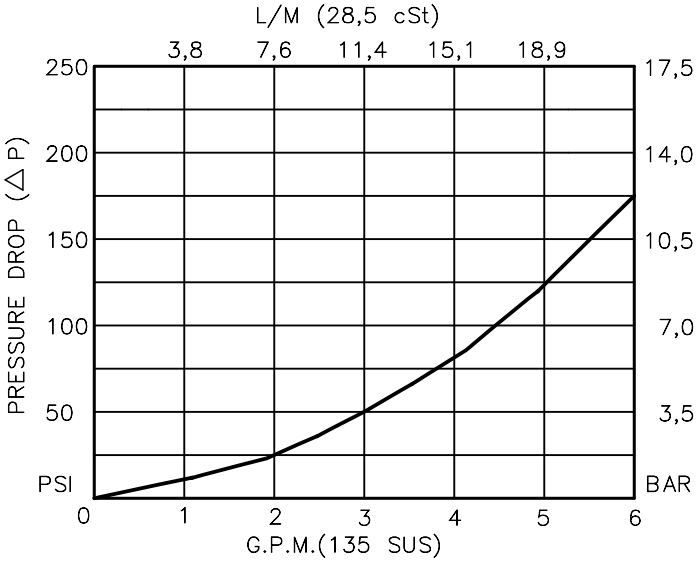

BUCHER hydraulics

WWW.SUMY.IR

MANUAL VALVE
PUSH TO CLOSE

DESCRIPTION

This unit is a SCREW IN, cartridge type, guided spool, spring biased open, push to close, hydraulic manual valve.

OPERATIONS

This valve allows flow between ports 1 and 2.
When valve is actuated, the spool in this valve is shifted and allows no flow between ports 1 and 2.

FEATURES AND BENEFITS

Low effort leakproof valve stem.
Push to close mechanical effort at no pressure is 17.5 lbs (8.0kg).
Each 1000 psi at port 1 adds 96 lbs of mechanical effort.
Pressure at port 2 does not add to mechanical effort.
All external carbon steel parts are plated for longer life against the elements.
All cartridge valves are 100% functionally tested.
Industry common cavity.

SPECIFICATIONS

OPERATING PRESSURE:	5,000 PSI [350 BAR]
PROOF PRESSURE:	10,000 psi [700 bar]
FLOW:	6.0 gpm [22.7 l/m] nominal. See performance chart.
INTERNAL LEAKAGE:	5 cu.in/min [82 cc/min] @ 5,000 psi (350 bar)
VALVE HOUSINGS:	2500 psi [175 bar] = Aluminum - Anodized. 5000 psi [350 bar] = Steel - Unplated.
OPERATING TEMPERATURE:	-40° to +250° F. [-40° to +120° C.]
OPERATING MEDIA:	All general purpose hydraulic fluids such as MIL-H-5606, SAE-#10, SAE-#20, etc.
INSTALLATION:	No restrictions.
FILTRATION:	25 microns or better.
SEAL KIT:	SKN-1021 Buna "N". SKV-1021 Viton.
WEIGHT:	0.31 lb [.14 kg] cartridge only.
VALVE CAVITY:	#C1020, See Page 0-012.0.

info.el@bucherhydraulics.com www.bucherhydraulics.com/commoncavity

© 2026 by Bucher Hydraulics, Inc., 2545 Northwest Parkway, Elgin, Illinois 60124, USA
All rights reserved.
Data is provided for the purpose of product description only, and must not be construed as warranted characteristics in the legal sense. The information does not relieve users from the duty of conducting their own evaluations and tests. Because the products are subject to continual improvement, we reserve the right to amend the product specifications contained in this catalogue.

BUCHER hydraulics
WWW.SUMY.IR

General information
Cavity

Type series: AL

Dimensions and sectional view

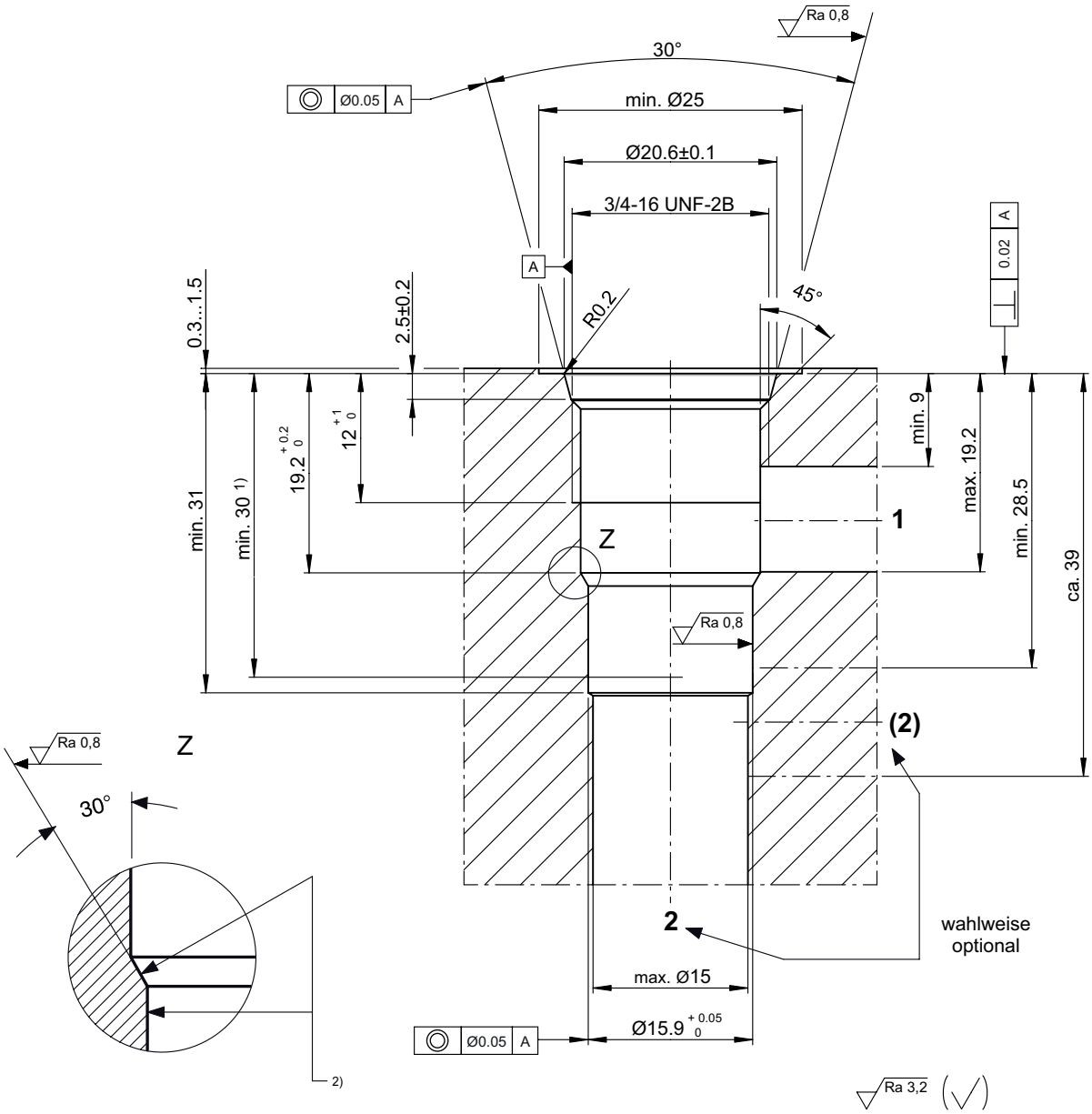

HINWEIS!
NOTE!

1) Passungstiefe
Minimum depth of specified diametral tolerance

2) Der Gewindeauslauf darf die Ringfläche und Ø15.9 nicht verletzen.
The thread runout must not damage the ring surface or the Ø15.9.

Beispiel für die Masseinheit:
Example for the dimensional units:

0.79 = 0.79 mm millimeter

Installation information

ATTENTION!
You must maintain the specified positional and diametral tolerances. To ensure trouble-free operation of the screw-in cartridges, we strongly recommend that pilot drilling, boring, reaming and cavity thread-cutting are always performed in one setup.

NOTE!
We offer form tool sets for sale or hire. For further information, see data sheet 400-P-040011.

NOTE!
Cavity type to factory standard.

info.ch@bucherhydraulics.com **www.bucherhydraulics.com**

© 2023 by Bucher Hydraulics AG Frutigen, 3714 Frutigen, Switzerland

All rights reserved.
Data is provided for the purpose of product description only, and must not be construed as warranted characteristics in the legal sense. The information does not relieve users from the duty of conducting their own evaluations and tests. Because the products are subject to continual improvement, we reserve the right to amend the product specifications contained in this catalogue.

BUCHER hydraulics

WWW.SUMY.IR

Directional valve 2-way/2-position

Q_{max} = 30 l/min, p_{max} = 250 bar
switching solenoid with emergency override, direct acting, spool type
Type series: WK22G_A5...

- Screw-in cartridge valve
- For cavity AL
- All external parts with zinc-nickel coating according to DIN EN ISO 19598
- Installation in threaded port body type GALA
- The slip-on coil can be rotated, and it can be replaced without opening the hydraulic envelope
- High pressure wet-armature solenoids
- Various plug-connector systems and voltages are available
- Optimized Δp values
- With manual override

Description

The 2-way/2-position solenoid operated spool valves, series WK22..., are size 5, direct acting, pressure balanced screw-in valves with a 3/4-16 UNF-2A mounting thread. They are designed on the proven sliding-spool principle. The straightforward design delivers an outstanding price/performance ratio and excellent pressure-drop/flow rate values. All external parts of the screw-in valves are zinc-nickel plated, and are thus suitable for use in the harshest operating environments. The slip-on coils can be replaced without opening the hydraulic envelope and can be positioned at any angle through 360°. These valves are mainly used in mobile and industrial applications as pilot valves for controlling the travel direction of actuators such as hydraulic motors and cylinders. For self-assembly, please refer to the section related data sheets.

Symbol

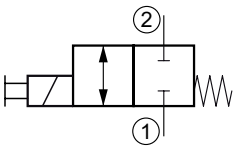

Technical Data

General Characteristics	Description, value, unit
Function group	Directional valve
Function	2-way/2-position
Design	Screw-in cartridge valve
Controls	switching solenoid with emergency override
Characteristic	direct acting, spool type
MTTFd value	150 years
Construction size	nominal size 5
Thread size	3/4-16 UNF-2A
Mounting attitude	unrestricted
Weight	0.35 kg
Cavity acc. factory standard	For cavity AL
Tightening torque steel	40 Nm
Tightening torque aluminium	40 Nm
Tightening torque tolerance	± 10 %
Minimum ambient temperature	- 25 °C
Maximum ambient temperature	+ 50 °C
Surface protection	All external parts with zinc-nickel coating according to DIN EN ISO 19598
Available seal types	several seal types available, see ordering code
Seal kit order number	NBR: DS-246-N / FKM: DS-246-V

Hydraulic Characteristics	Description, value, unit
Maximum operating pressure	250 bar
Restriction of the operating pressure	Version "E" - 17 W: max. 50 bar
Maximum flow rate	30 l/min
Flow direction	see symbol
Hydraulic fluid	HL and HLP mineral oil according to DIN 51 524; other fluids on request!
Minimum fluid temperature	- 25 °C
Maximum fluid temperature	+ 80 °C
Viscosity range	10 ... 500 mm^2/s (cSt)
Recommended viscosity range	15 ... 250 mm^2/s (cSt)
Minimum fluid cleanliness (cleanlineless class according to ISO 4406:1999)	class 20/18/15

Electric Characteristics	Description, value, unit
Actuator type	solenoid coil
Solenoid coils type	D36
Supply voltage DC	12/24 V DC
Supply voltage AC	115/230 V AC (50 ... 60 Hz)
Supply voltage tolerance	± 10 %
Maximum permissible power consumption	Version "E": V DC = 17 W / V AC = 17 W Version "N": V DC = 27 W / V AC = 25 W
Switching time	Version "E": 25...75 ms (energized) / 15...30 ms (de-energized) Version "N": 30...110 ms (energized) / 20...70 ms (de-energized)

Electric Characteristics	Description, value, unit
Relative duty cycle	100 %
Electrical connection coil	several connection types available, see ordering code
Protection class solenoid coil to ISO 20 653 / EN 60 529	several classes of protection available, see ordering code (with appropriate mating connector and proper fitting and sealing)

NOTE!
The switching time can be strongly dependent on flow rate, pressure, oil viscosity and the dwell time under pressure. In practice, the switching time may therefore deviate from the specified value range.

Performance graphs

measured with oil viscosity 33.0 mm²/s (cSt), coil at steady-state temperature and 10 % undervoltage

p = f (Q) Performance limit

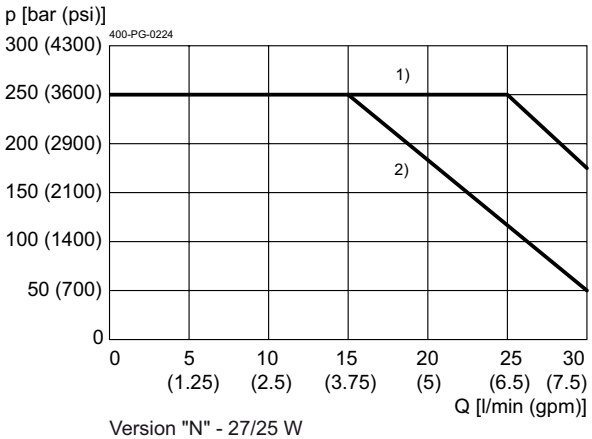

Version "N" - 27/25 W
1) 1 → 2
2) 2 → 1

p = f (Q) Performance limit

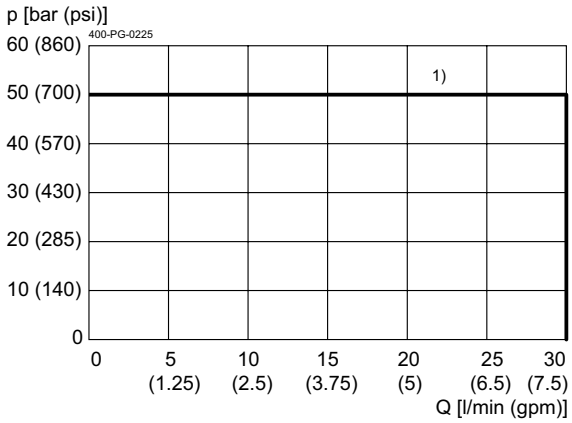

Version "E" - 17 W
1) 1 → 2, 2 → 1

Δp = f (Q) Pressure drop-flow rate characteristic

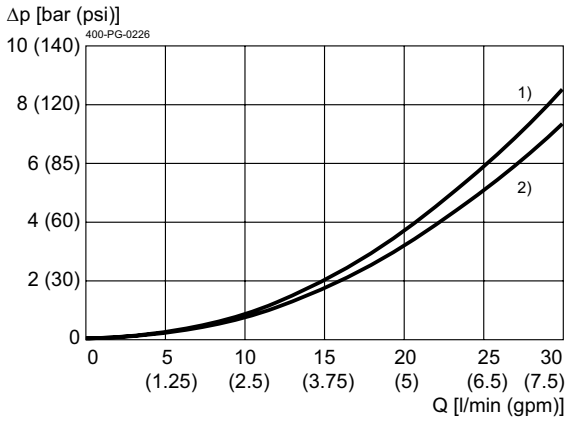

1) 1 → 2
2) 2 → 1

Dimensions and sectional view

Beispiel für die Masseinheit:
Example for the dimensional units:

0.79	= 0.79 mm	millimeter
(.031)	= 0.031"	inch

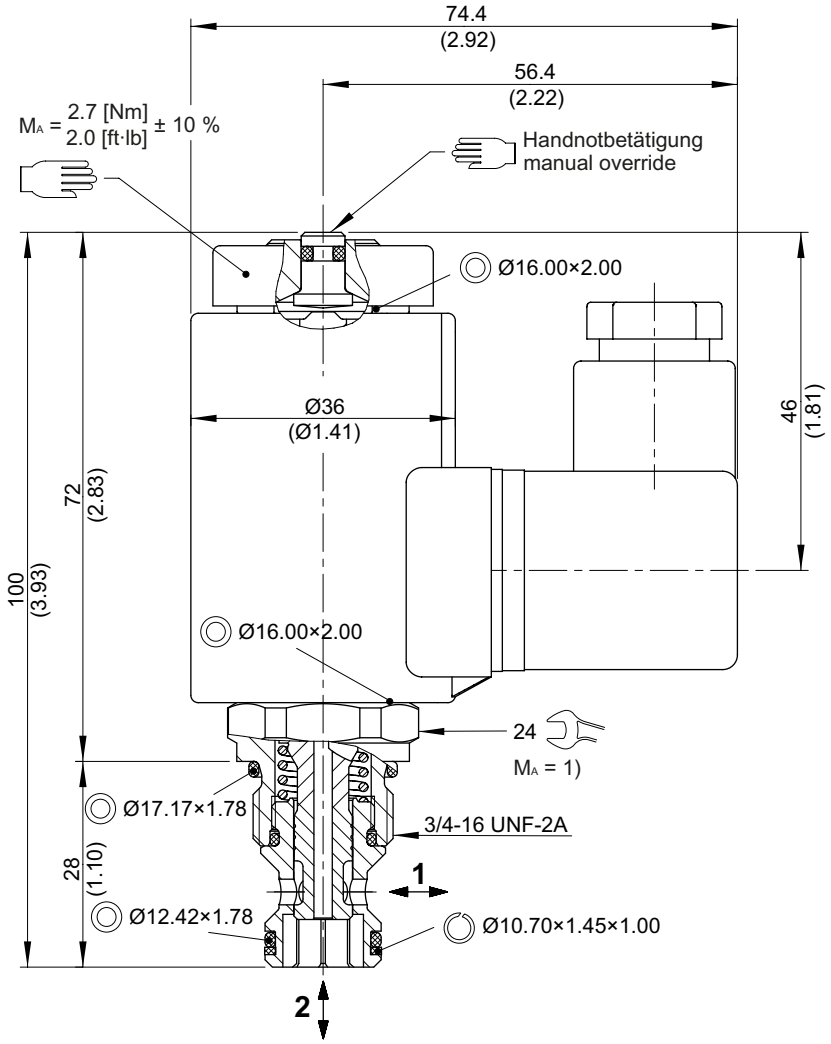

Installation information

NOTE!
1) When fitting the screw-in cartridge valve, use the specified tightening torque. The value can be found in the chapter technical data.

NOTE!
The seals are not available individually. The seal kit order number can be found in the chapter "Technical data".

ATTENTION!
Only qualified personnel with mechanical skills may carry out any maintenance work. Generally, the only work that should ever be undertaken is to check, and possibly replace, the seals. When changing seals, oil or grease the new seals thoroughly before fitting them.

Ordering code

Ex. W | K | 22G | N | A | 5 | _ | - | 2 | 24 | D | _

W	=	directional valve
K	=	spool-type, direct acting
22G	=	2-way/2-position, de-energized closed
N	=	electrically operated, V DC = 27 W / V AC = 25 W
E	=	electrically operated, V DC = 17 W / V AC = 17 W
A ... Q	=	standard model according to valid data sheet *(standard)*
Z ... R	=	special model after consultation
5	=	nominal size 5
(blank)	=	NBR (nitril-butadien-rubber / BUNA) seals *(standard)*
V	=	FKM (fluorocarbon rubber / VITON) seals *(special seals - please consult BUCHER)*
1 ... 9	=	technical design no. (omit when ordering)
...	=	voltage e.g. 24 (24 V)
D	=	current DC
A	=	current AC
(blank)	=	DIN EN 175301-803 connection, 3-pole 2 P+E with mating plug, IP 65 *(standard)*
M100	=	DIN EN 175301-803 connection, 3-pole 2 P+E
C	=	Kostal plug connection (IP 65)
JT	=	Junior Timer radial plug connection (with protection diode, IP 65)
IT	=	Junior Timer axial plug connection (with protection diode, IP 65)
D	=	Deutsch plug connection DT04-2P (IP 67/69K)
DT	=	Deutsch plug connection DT04-2P (with protection diode, IP 67/69K)
S	=	AMP Superseal 1.5 (IP 67) / Metri-Pack 150 (IP 65) plug connection
F	=	flying leads (500 mm)

mating plug not supplied

Related data sheets

Reference	Description
400-P-040011	Forming tools
400-P-040171	Cavity AL
400-P-720101	Threaded port body GALA
400-P-120110	Solenoid coilD 36
400-P-010101	MTTFD Values for Hydraulic Valves

info.ch@bucherhydraulics.com **www.bucherhydraulics.com**

© 2021 by Bucher Hydraulics AG Frutigen, 3714 Frutigen, Switzerland

All rights reserved.
Data is provided for the purpose of product description only, and must not be construed as warranted characteristics in the legal sense. The information does not relieve users from the duty of conducting their own evaluations and tests. Because the products are subject to continual improvement, we reserve the right to amend the product specifications contained in this catalogue.

BUCHER hydraulics

WWW.SUMY.IR

Directional valve 2-way/2-position

Q_{max} = 30 l/min, p_{max} = 250 bar
switching solenoid with emergency override, direct acting, spool type
Type series: WK22O_A5...

- Screw-in cartridge valve
- For cavity AL
- All external parts with zinc-nickel coating according to DIN EN ISO 19598
- Installation in threaded port body type GALA
- The slip-on coil can be rotated, and it can be replaced without opening the hydraulic envelope
- Optimized Δp values
- High pressure wet-armature solenoids
- Various plug-connector systems and voltages are available
- With manual override

Description

The 2-way/2-position solenoid operated spool valves, series WK22..., are size 5, direct acting, pressure balanced screw-in valves with a 3/4-16 UNF-2A mounting thread. They are designed on the proven sliding-spool principle. The straightforward design delivers an outstanding price/performance ratio and excellent pressure-drop/flow rate values. All external parts of the screw-in valves are zinc-nickel plated, and are thus suitable for use in the harshest operating environments. The slip-on coils can be replaced without opening the hydraulic envelope and can be positioned at any angle through 360°. These valves are mainly used in mobile and industrial applications as pilot valves for controlling the travel direction of actuators such as hydraulic motors and cylinders. For self-assembly, please refer to the section related data sheets.

Symbol

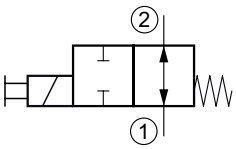

Technical Data

General Characteristics	Description, value, unit
Function group	Directional valve
Function	2-way/2-position
Design	Screw-in cartridge valve
Controls	switching solenoid with emergency override
Characteristic	direct acting, spool type
MTTFd value	150 years
Construction size	nominal size 5
Thread size	3/4-16 UNF-2A
Mounting attitude	unrestricted
Weight	0.35 kg
Cavity acc. factory standard	For cavity AL
Tightening torque steel	40 Nm
Tightening torque aluminium	40 Nm
Tightening torque tolerance	± 10 %
Minimum ambient temperature	- 25 °C
Maximum ambient temperature	+ 50 °C
Surface protection	All external parts with zinc-nickel coating according to DIN EN ISO 19598
Available seal types	several seal types available, see ordering code
Seal kit order number	NBR: DS-246-N / FKM: DS-246-V

Hydraulic Characteristics	Description, value, unit
Maximum operating pressure	250 bar
Restriction of the operating pressure	Version "E" - 17 W: max. 50 bar
Maximum flow rate	30 l/min
Flow direction	see symbol
Hydraulic fluid	HL and HLP mineral oil according to DIN 51 524; other fluids on request!
Minimum fluid temperature	- 25 °C
Maximum fluid temperature	+ 80 °C
Viscosity range	10 ... 500 mm^2/s (cSt)
Recommended viscosity range	15 ... 250 mm^2/s (cSt)
Minimum fluid cleanliness (cleanlineless class according to ISO 4406:1999)	class 20/18/15

Electric Characteristics	Description, value, unit
Actuator type	solenoid coil
Solenoid coils type	D36
Supply voltage DC	12/24 V DC
Supply voltage AC	115/230 V AC (50 ... 60 Hz)
Supply voltage tolerance	± 10 %
Maximum permissible power consumption	Version "E": V DC = 17 W / V AC = 17 W Version "N": V DC = 27 W / V AC = 25 W
Switching time	Version "E": 25...75 ms (energized) / 15...30 ms (de-energized) Version "N": 30...110 ms (energized) / 20...70 ms (de-energized)

Electric Characteristics	Description, value, unit
Relative duty cycle	100 %
Electrical connection coil	several connection types available, see ordering code
Protection class solenoid coil to ISO 20 653 / EN 60 529	several classes of protection available, see ordering code (with appropriate mating connector and proper fitting and sealing)

NOTE!
The switching time can be strongly dependent on flow rate, pressure, oil viscosity and the dwell time under pressure. In practice, the switching time may therefore deviate from the specified value range.

Performance graphs

measured with oil viscosity 33.0 mm²/s (cSt), coil at steady-state temperature and 10 % undervoltage

p = f (Q) Performance limit

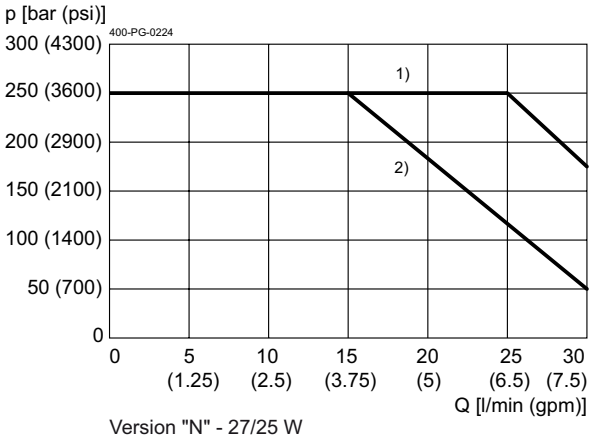

Version "N" - 27/25 W
1) 1 → 2
2) 2 → 1

p = f (Q) Performance limit

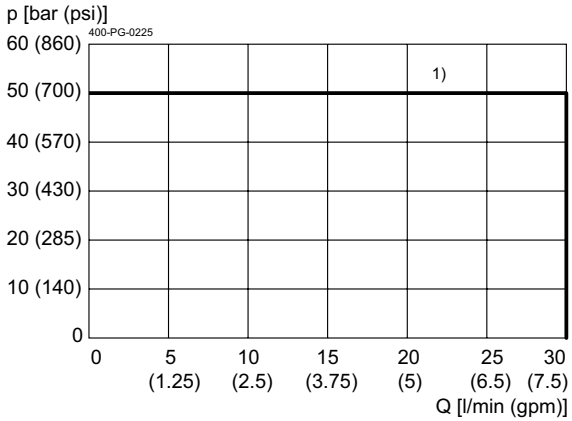

Version "E" - 17 W
1) 1 → 2, 2 → 1

Δp = f (Q) Pressure drop-flow rate characteristic

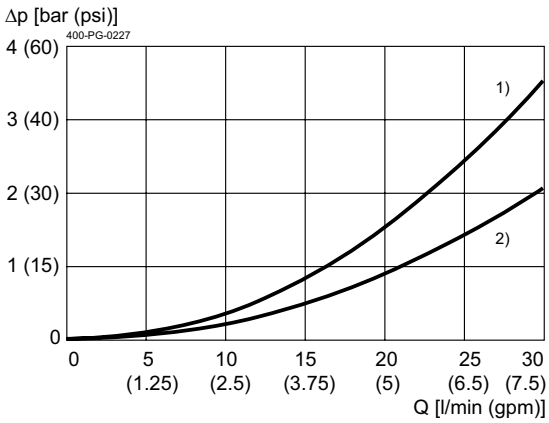

1) 1 → 2
2) 2 → 1

Dimensions and sectional view

Beispiel für die Masseinheit:
Example for the dimensional units:

0.79	= 0.79 mm	millimeter
(.031)	= 0.031"	inch

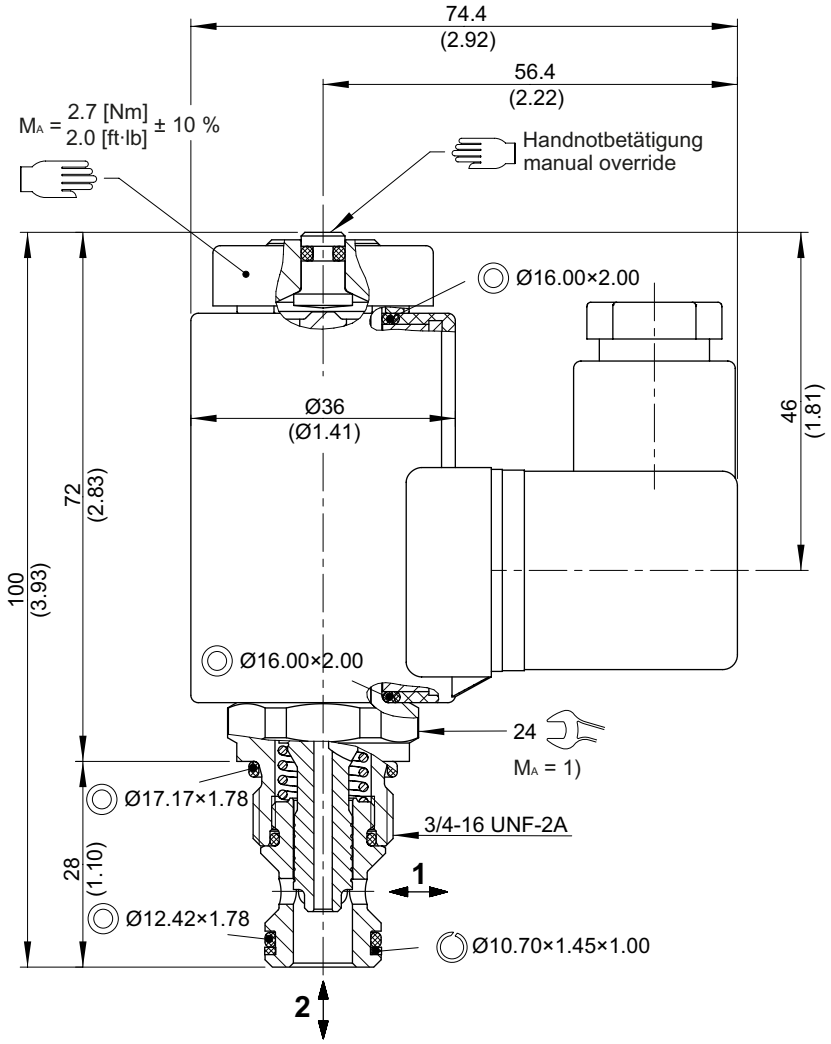

Installation information

NOTE!
1) When fitting the screw-in cartridge valve, use the specified tightening torque. The value can be found in the chapter "technical data".

NOTE!
The seals are not available individually. The seal kit order number can be found in the chapter "Technical data".

ATTENTION!
Only qualified personnel with mechanical skills may carry out any maintenance work. Generally, the only work that should ever be undertaken is to check, and possibly replace, the seals. When changing seals, oil or grease the new seals thoroughly before fitting them.

Ordering code

W K 22O N A 5 _ - 2 24 D _

W	=	directional valve
K	=	spool-type, direct acting
22O	=	2/2 function, de-energized open
N	=	electrically operated, V DC = 27 W / V AC = 25 W
E	=	electrically operated, V DC = 17 W / V AC = 17 W
A ... Q	=	standard model - see relevant data sheets
Z ... R	=	special features - please consult BUCHER
5	=	nominal size 5
(blank)	=	NBR (Nitrile) seals (standard)
V	=	FKM (Viton) seals (special seals - please contact BUCHER)
1 ... 9	=	design stage (omit when ordering new units)
...	=	voltage e.g. 24 (24 V)
D	=	current DC
A	=	current AC
(blank)	=	DIN EN 175301-803 connection, 3-pole 2 P+E with mating plug, IP 65 *(standard)*
M100	=	DIN EN 175301-803 connection, 3-pole 2 P+E
C	=	Kostal plug connection (IP 65)
JT	=	Junior Timer radial plug connection (with protection diode, IP 65)
IT	=	Junior Timer axial plug connection (with protection diode, IP 65)
D	=	Deutsch plug connection DT04-2P (IP 67/69K)
DT	=	Deutsch plug connection DT04-2P (with protection diode, IP 67/69K)
S	=	AMP Superseal 1.5 (IP 67) / Metri-Pack 150 (IP 65) plug connection
F	=	flying leads (500 mm)

mating plug not supplied

Related data sheets

Reference	Description
400-P-040011	Forming tools
400-P-040171	Cavity AL
400-P-720101	Threaded port body GALA
400-P-120110	Solenoid coil D36
400-P-010101	MTTFD Values for Hydraulic Valves

info.ch@bucherhydraulics.com **www.bucherhydraulics.com**

© 2021 by Bucher Hydraulics AG Frutigen, 3714 Frutigen, Switzerland

All rights reserved.
Data is provided for the purpose of product description only, and must not be construed as warranted characteristics in the legal sense. The information does not relieve users from the duty of conducting their own evaluations and tests. Because the products are subject to continual improvement, we reserve the right to amend the product specifications contained in this catalogue.

BUCHER hydraulics
WWW.SUMY.IR

General information
Cavity

Type series: AM

Dimensions and sectional view

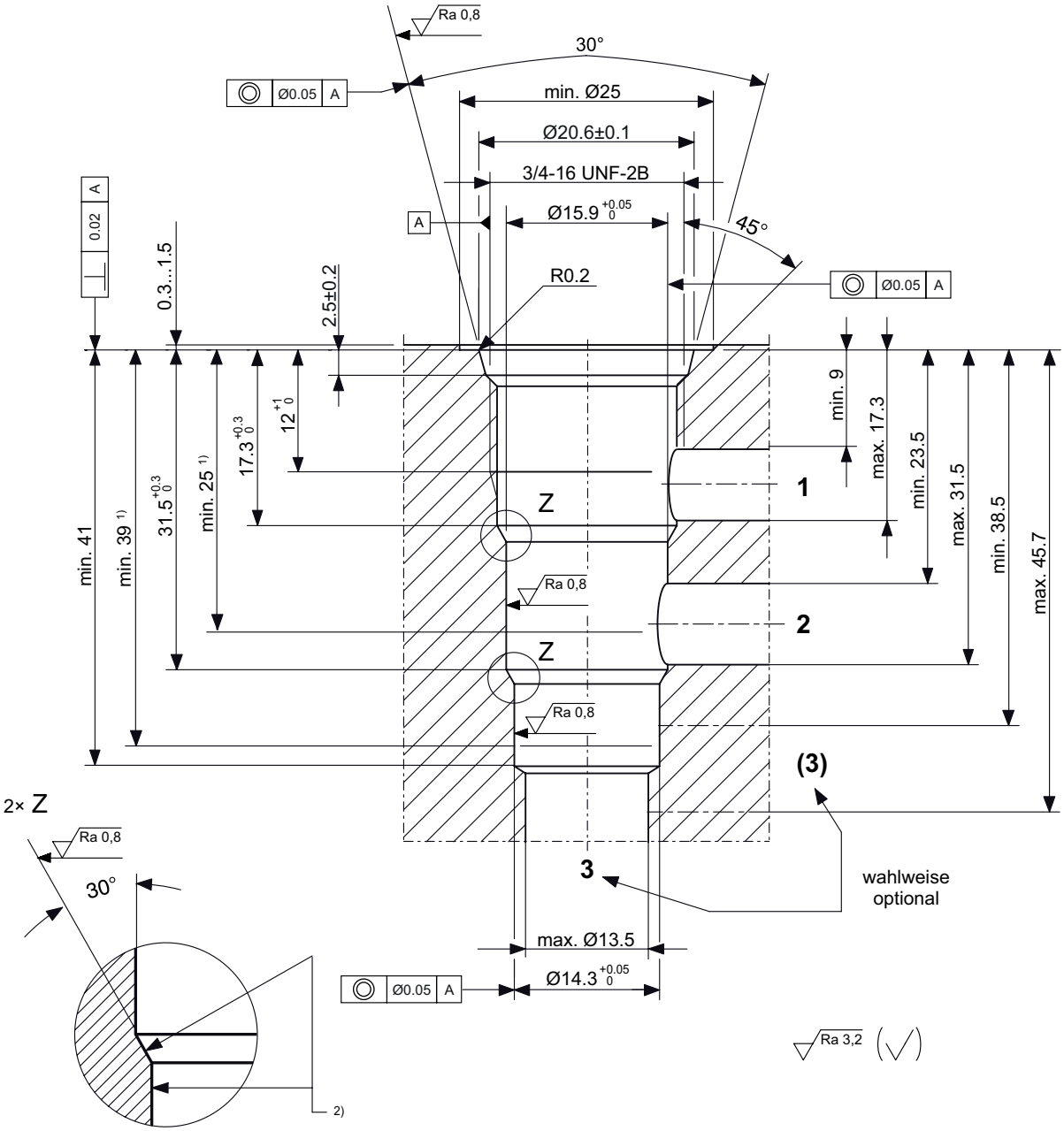

HINWEIS!
NOTE!

1) Passungstiefe
Minimum depth of specified diametral tolerance

2) Der Gewindeauslauf darf die Ringfläche und Ø15.9 nicht verletzen.
The thread runout must not damage the ring surface or the Ø15.9.

Beispiel für die Masseinheit:
Example for the dimensional units:
0.79 = 0.79 mm millimeter

Installation information

ATTENTION!
You must maintain the specified positional and diametral tolerances. To ensure trouble-free operation of the screw-in cartridges, we strongly recommend that pilot drilling, boring, reaming and cavity thread-cutting are always performed in one setup.

NOTE!
We offer form tool sets for sale or hire. For further information, see data sheet 400-P-040011.

NOTE!
Cavity type to factory standard.

info.ch@bucherhydraulics.com **www.bucherhydraulics.com**

© 2023 by Bucher Hydraulics AG Frutigen, 3714 Frutigen, Switzerland

All rights reserved.
Data is provided for the purpose of product description only, and must not be construed as warranted characteristics in the legal sense. The information does not relieve users from the duty of conducting their own evaluations and tests. Because the products are subject to continual improvement, we reserve the right to amend the product specifications contained in this catalogue.

BUCHER hydraulics

WWW.SUMY.IR

Directional valve 3-way/2-position

Q_{max} = 5 l/min, p_{max} = 420 bar
direct acting, spool type, switching solenoid with emergency override
Type series: WKP32GLA1...

- Screw-in cartridge valve
- For cavity AM
- All external parts with zinc-nickel plating according to DIN EN ISO 19598
- Installation in threaded port body type GAMA
- The slip-on coil can be rotated, and it can be replaced without opening the hydraulic envelope
- "Low watt" version
- High pressure wet-armature solenoids
- Various plug-connector systems and voltages are available
- Can be used as a high-pressure pilot valve
- With manual override

Description

The 3-way/2-position solenoid operated spool valves, series WKP32..., are size 1, direct acting, pressure balanced screw-in valves with a 3/4-16 UNF-2A mounting thread. They are designed on the proven sliding-spool principle. The straightforward design delivers an outstanding price/performance ratio. All external parts of the screw-in valves are zinc-nickel plated, and are thus suitable for use in the harshest operating environments. The slip-on coils can be replaced without opening the hydraulic envelope and can be positioned at any angle through 360°. These valves are primarily used in mobile and industrial applications as pilot valves for controlling the travel direction of actuators such as hydraulic motors and cylinders. For self-assembly, please refer to the section related data sheets.

Symbol

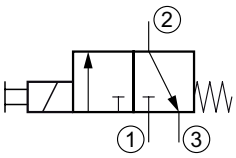

Technical data

General Characteristics	Description, value, unit
Function group	Directional valve
Function	3-way/2-position
Design	Screw-in cartridge valve
Controls	switching solenoid with emergency override
Characteristic	direct acting, spool type
Construction size	nominal size 1
Thread size	3/4-16 UNF-2A
Mounting attitude	unrestricted
Weight	0.48 kg
Cavity acc. factory standard	For cavity AM
Tightening torque steel	60 Nm
Tightening torque aluminium	60 Nm
Tightening torque tolerance	± 10 %
Minimum ambient temperature	- 25 °C
Maximum ambient temperature	+ 50 °C
Surface protection	All external parts with zinc-nickel plating according to DIN EN ISO 19598
Sealing material	see ordering code
Seal kit order number	NBR: DS-247-N / FKM: DS-247-V

Hydraulic Characteristics	Description, value, unit
Maximum operating pressure	420 bar
Restriction of the operating pressure	at port 3 max. 250 bar
Maximum flow rate	5 l/min
Flow direction	see symbol
Hydraulic fluid	HL and HLP mineral oil according to DIN 51 524; other fluids on request!
Minimum fluid temperature	- 25 °C
Maximum fluid temperature	+ 80 °C
Viscosity range	10 ... 500 mm^2/s (cSt)
Recommended viscosity range	15 ... 250 mm^2/s (cSt)
Minimum fluid cleanliness (cleanlineless class according to ISO 4406:1999)	class 20/18/15

Electric Characteristics	Description, value, unit
Actuator type	solenoid coil
Solenoid coils type	D36
Supply voltage DC	12/24 V DC
Supply voltage tolerance	± 10 %
Maximum permissible power consumption	8 W
Relative duty cycle	100 %
Electrical connection coil	several connection types available, see ordering code
Protection class solenoid coil to ISO 20 653 / EN 60 529	several classes of protection available, see ordering code (with appropriate mating connector and proper fitting and sealing)

Performance graphs

measured with oil viscosity 33.0 mm²/s (cSt), coil at steady-state temperature and 10 % undervoltage

p = f (Q) Performance limit

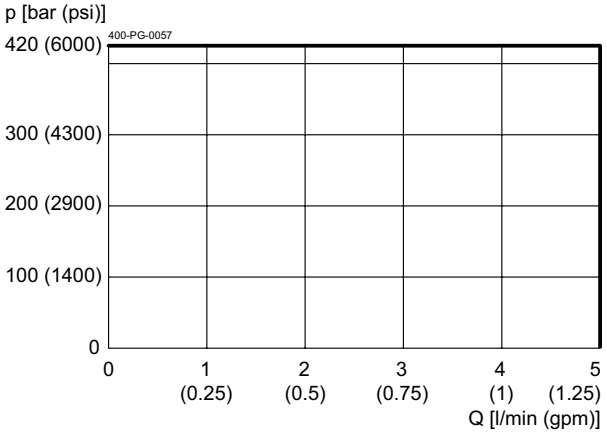

Δp = f (Q) Pressure drop-flow rate characteristic

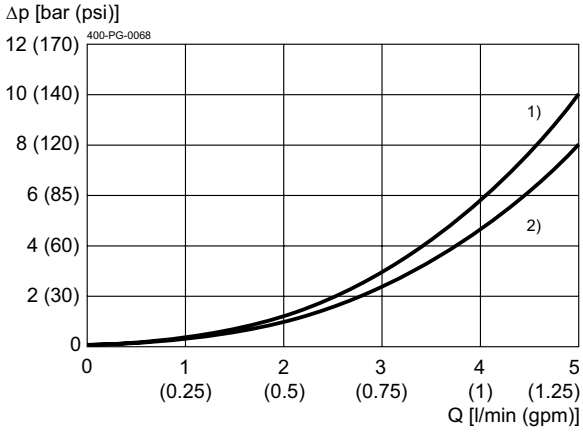

1) 2 → 3
2) 1 → 2

Dimensions and sectional view

Beispiel für die Masseinheit:
Example for the dimensional units:

0.79 = 0.79 mm millimeter
(.031) = 0.031" inch

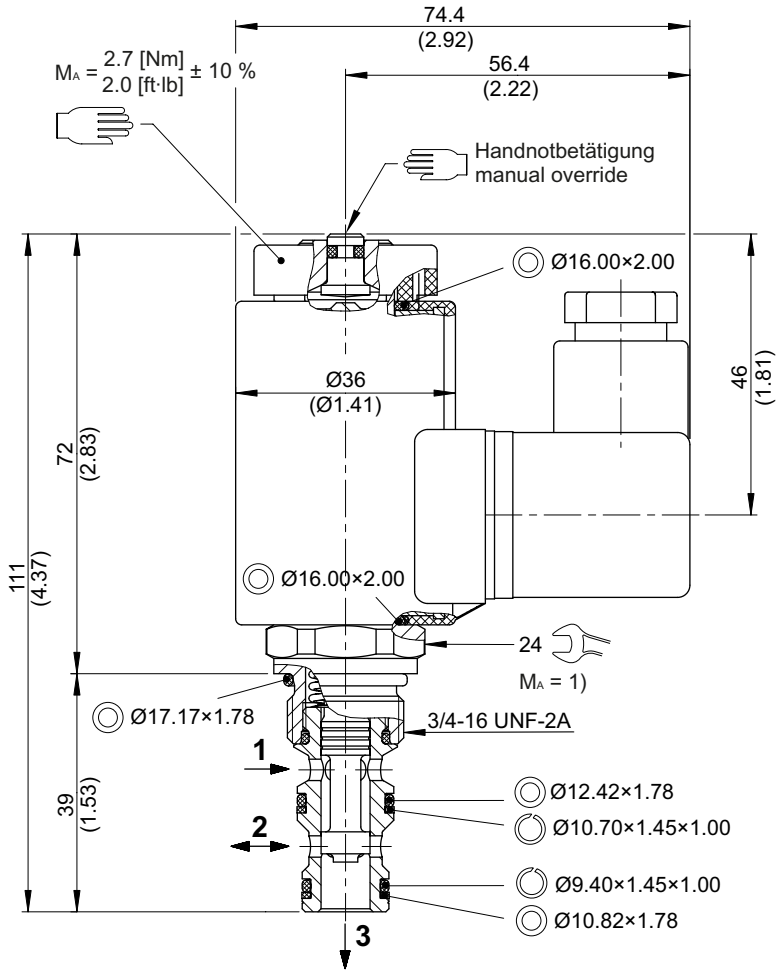

Installation information

NOTE!
1) When fitting the screw-in cartridge valve, use the specified tightening torque. The value can be found in the chapter "Technical data".

NOTE!
The seals are not available individually. The seal kit order number can be found in the chapter "Technical data".

ATTENTION!
Only qualified personnel with mechanical skills may carry out any maintenance work. Generally, the only work that should ever be undertaken is to check, and possibly replace, the seals. When changing seals, oil or grease the new seals thoroughly before fitting them.

Ordering code

Ex. W K P 32G L A 1 _ - 2 24 D _

W = directional valve
K = spool-type, direct acting
P = high-pressure version (420 bar)
32G = 3-way/2-position, de-energized closed
L = electrically operated, VDC = 8 W
A ... Q = standard model according to valid data sheet *(standard)*
Z ... R = special model after consultation
1 = nominal size 1 (preferably as pilot valve)
(blank) = NBR (nitril-butadien-rubber / BUNA) seals *(standard)*
V = FKM (fluorocarbon rubber / VITON) seals
(special seals - please consult BUCHER)
1 ... 9 = technical design no. (omit when ordering)
... = voltage e.g. 24 (24 V)
D = current DC
(blank) = DIN EN 175301-803 connection, 3-pole 2 P+E with mating plug, IP 65 *(standard)*
M100 = DIN EN 175301-803 connection, 3-pole 2 P+E
the following plug-variant on request:
DT = Deutsch plug connection DT04-2P (with protection diode, IP 67/69K), mating plug not supplied

Related data sheets

Reference	Description
400-P-040011	Forming tools
400-P-040181	Cavity AM
400-P-720111	Threaded port body GAMA
400-P-120110	Solenoid coil D36

info.ch@bucherhydraulics.com **www.bucherhydraulics.com**

© 2022 by Bucher Hydraulics AG Frutigen, 3714 Frutigen, Switzerland

All rights reserved.
Data is provided for the purpose of product description only, and must not be construed as warranted characteristics in the legal sense. The information does not relieve users from the duty of conducting their own evaluations and tests. Because the products are subject to continual improvement, we reserve the right to amend the product specifications contained in this catalogue.

BUCHER hydraulics

WWW.SUMY.IR

Directional valve 3-way/2-position

Q_{max} = 15 l/min, p_{max} = 420 bar
Direct acting, spool type, switching solenoid with emergency override
Type series: WKP32GNA3...

- Screw-in cartridge valve for cavity AM
- All external parts with zinc-nickel plating according to DIN EN ISO 19598
- Installation in threaded port body type GAMA
- Can be used as a high-pressure pilot valve
- With manual override
- The slip-on coil can be rotated, and it can be replaced without opening the hydraulic envelope
- High pressure wet-armature solenoids
- Various plug-connector systems and voltages are available

Symbol

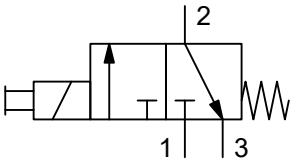

Description

The 3-way/2-position solenoid operated spool valves, series WKP32..., are size 3, direct acting, pressure balanced screw-in valves with a 3/4-16 UNF mounting thread. They are designed on the proven sliding-spool principle. The straightforward design delivers an outstanding price/performance ratio. All external parts of the screw-in valves are zinc-nickel plated and are thus suitable for use in the harshest operating environments.

The slip-on coils can be replaced without opening the hydraulic envelope and can be positioned at any angle through 360°. These valves are primarily used in mobile and industrial applications as pilot valves for controlling the travel direction of actuators such as hydraulic motors and cylinders. For self-assembly, please refer to the section related data sheets.

Technical data

General characteristics	Description, value, unit
Function group	directional valve
Function	3-way/2-position
Design	screw-in cartridge valve
Controls	switching solenoid with emergency override
Characteristic	direct acting, spool type
MTTFd value	150 years
Construction size	NG 3
Thread size	3/4-16 UNF-2A
Mounting attitude	unrestricted
Weight	0.48 kg
Cavity acc. factory standard	AM
Tightening torque steel	60 Nm
Tightening torque aluminium	60 Nm
Tightening torque tolerance	± 10 %
Minimum ambient temperature	- 25 °C
Maximum ambient temperature	+ 50 °C
Surface protection	all external parts with zinc-nickel plating according to DIN EN ISO 19598
Sealing material	see ordering code
Seal kit order number	NBR: DS-247-N / FKM: DS-247-V

Hydraulic characteristics	Description, value, unit
Maximum operating pressure	420 bar
Restriction of the operating pressure	at port 3 max 250 bar
Maximum flow rate	15 l/min
Flow direction	see symbol
Hydraulic fluid	HL and HLP mineral oil according to DIN 51 524; other fluids on request!
Minimum fluid temperature	- 25 °C
Maximum fluid temperature	+ 80 °C
Viscosity range	10 ... 500 mm^2/s (cSt)
Recommended viscosity range	15 ... 250 mm^2/s (cSt)
Minimum fluid cleanliness (cleanlineless class according to ISO 4406:1999)	class 20/18/15

WWW.SUMY.IR

Electric characteristics	Description, value, unit
Actuator type	solenoid coil
Solenoid coils type	D36
Supply voltage DC	12/24 V DC
Supply voltage AC	115/230 (50 ... 60 Hz) V AC
Supply voltage tolerance	± 10 %
Nominal power consumption	V DC = 27 W / V AC = 25 W
Relative duty cycle	100 %
Electrical connection coil	several connection types available, see ordering code
Protection class solenoid coil to ISO 20 653 / EN 60 529	several classes of protection available, see ordering code (with appropriate mating connector and proper fitting and sealing)

Performance graphs

measured with oil viscosity 33.0 mm²/s (cSt), coil at steady-state temperature and 10 % undervoltage

p = f (Q) Performance limit

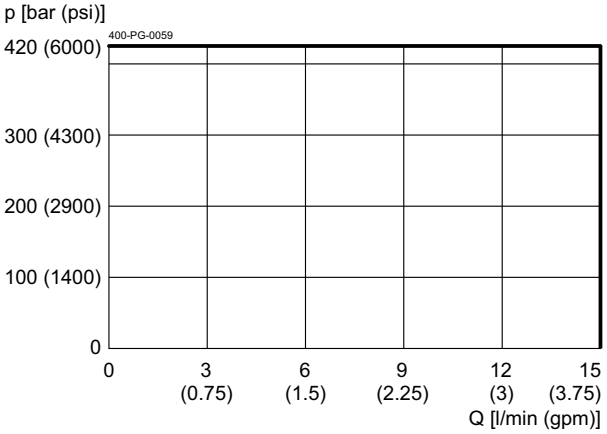

Δp = f (Q) Pressure drop-flow rate characteristic

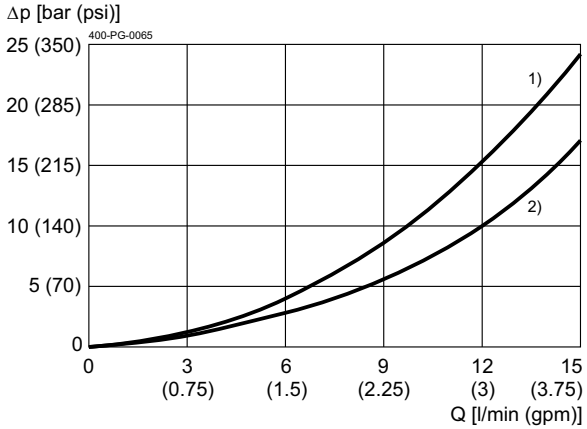

1) 2 → 3
2) 1 → 2

Installation

Beispiel für die Masseinheit:
Example for the dimensional units:

0.79 = 0.79 mm millimeter
(.031) = 0.031" inch

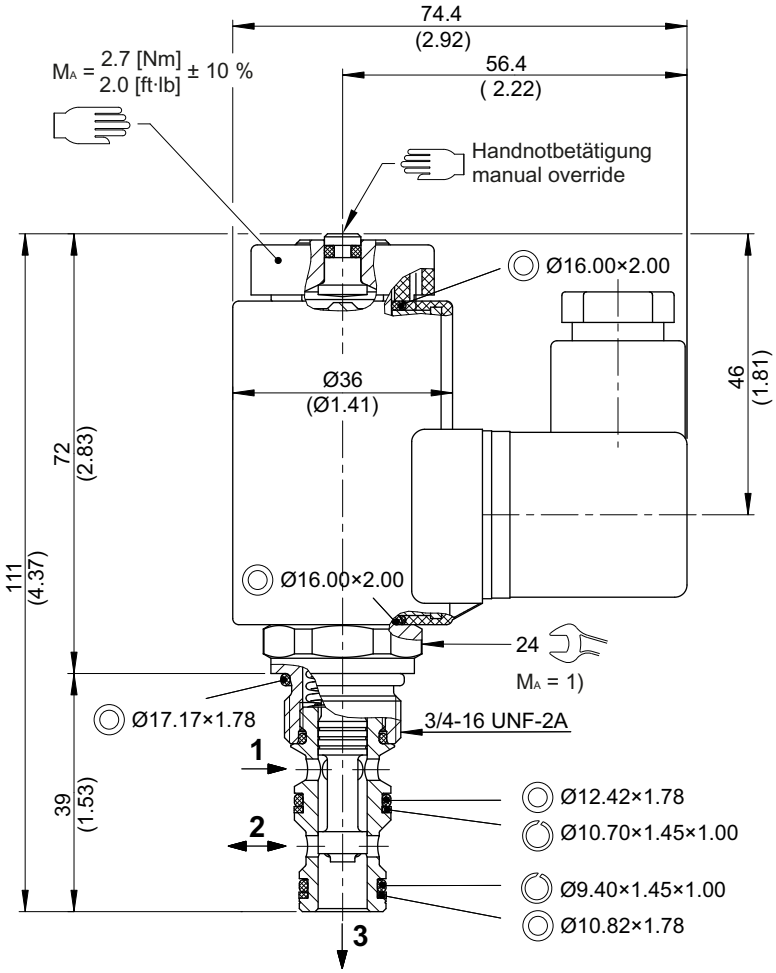

NOTE!
1) When fitting the screw-in cartridge valve, use the specified tightening torque. The value can be found in the chapter "Technical data".

ATTENTION!
Only qualified personnel with mechanical skills may carry out any maintenance work. Generally, the only work that should ever be undertaken is to check, and possibly replace, the seals. When changing seals, oil or grease the new seals thoroughly before fitting them.

NOTE!
The seals are not available individually. The seal kit order number can be found in the chapter "Technical data".

Ordering code

Ex. W K P 32G N A 3 _ - 2 24 D _

W	=	directional valve
K	=	spool-type, direct acting
P	=	high-pressure version (420 bar)
32G	=	3-way/2-position, de-energized closed
N	=	electrically operated, VDC = 27 W / V AC = 25 W
A ... Q	=	standard model according to valid data sheet *(standard)*
Z ... R	=	special model after consultation
3	=	nominal size 3 (preferably as pilot valve)
(blank)	=	NBR (nitril-butadien-rubber / BUNA) seals *(standard)*
V	=	FKM (fluorocarbon rubber / VITON) seals *(special seals - please consult BUCHER)*
1 ... 9	=	technical design no. (omit when ordering)
...	=	voltage e.g. 24 (24 V)
D	=	current DC
A	=	current AC
(blank)	=	DIN EN 175301-803 connection, 3-pole 2 P+E with mating plug, IP 65 *(standard)*
M100	=	DIN EN 175301-803 connection, 3-pole 2 P+E
C	=	Kostal plug connection (IP 65)
JT	=	Junior Timer radial plug connection (with protection diode, IP 65)
IT	=	Junior Timer axial plug connection (with protection diode, IP 65)
D	=	Deutsch plug connection DT04-2P (IP 67/69K)
DT	=	Deutsch plug connection DT04-2P (with protection diode, IP 67/69K)
S	=	AMP Superseal 1.5 (IP 67) / Metri-Pack 150 (IP 65) plug connection
F	=	flying leads (500 mm)

mating plug not supplied

Related data sheets

Reference	Description
400-P-040011	form tools
400-P-040181	cavity AM
400-P-720111	threaded port body GAMA
400-P-120110	solenoid coil D36
400-P-010101	MTTFd Values for Hydraulic Valves

info.ch@bucherhydraulics.com **www.bucherhydraulics.com**

© 2026 by Bucher Hydraulics AG Frutigen, 3714 Frutigen, Switzerland

All rights reserved.
Data is provided for the purpose of product description only, and must not be construed as warranted characteristics in the legal sense. The information does not relieve users from the duty of conducting their own evaluations and tests. Because the products are subject to continual improvement, we reserve the right to amend the product specifications contained in this catalogue.

BUCHER hydraulics

WWW.SUMY.IR

Directional valve 3-way/2-position

Q_{max} = 30 l/min, p_{max} = 250 bar
switching solenoid with emergency override, direct acting, spool type
Type series: WK32G_A5...

- Screw-in cartridge valve
- For cavity AM
- All external parts with zinc-nickel coating according to DIN EN ISO 19598
- Installation in threaded port body type GAMA
- The slip-on coil can be rotated, and it can be replaced without opening the hydraulic envelope
- High pressure wet-armature solenoids
- Various plug-connector systems and voltages are available
- Optimized Δp values
- With manual override

Description

The 3-way/2-position solenoid operated spool valves, series WK32..., are size 5, direct acting, pressure balanced screw-in valves with a 3/4-16 UNF-2A mounting thread. They are designed on the proven sliding-spool principle. The straightforward design delivers an outstanding price/performance ratio and excellent pressure-drop/flow rate values. All external parts of the screw-in valves are zinc-nickel plated, and are thus suitable for use in the harshest operating environments. The slip-on coils can be replaced without opening the hydraulic envelope and can be positioned at any angle through 360°. These valves are mainly used in mobile and industrial applications as pilot valves for controlling the travel direction of actuators such as hydraulic motors and cylinders. For self-assembly, please refer to the section related data sheets.

Symbol

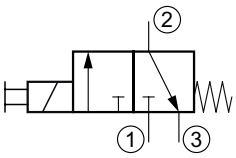

Technical Data

General Characteristics	Description, value, unit
Function group	Directional valve
Function	3-way/2-position
Design	Screw-in cartridge valve
Controls	switching solenoid with emergency override
Characteristic	direct acting, spool type
MTTFd value	150 years
Construction size	nominal size 5
Thread size	3/4-16 UNF-2A
Mounting attitude	unrestricted
Weight	0.4 kg
Cavity acc. factory standard	For cavity AM
Tightening torque steel	40 Nm
Tightening torque aluminium	40 Nm
Tightening torque tolerance	± 10 %
Minimum ambient temperature	- 25 °C
Maximum ambient temperature	+ 50 °C
Surface protection	All external parts with zinc-nickel coating according to DIN EN ISO 19598
Available seal types	several seal types available, see ordering code
Seal kit order number	NBR: DS-247-N / FKM: DS-247-V

Hydraulic Characteristics	Description, value, unit
Maximum operating pressure	250 bar
Restriction of the operating pressure	Version "E" - 17 W: max. 50 bar
Maximum flow rate	30 l/min
Flow direction	see symbol
Hydraulic fluid	HL and HLP mineral oil according to DIN 51 524; other fluids on request!
Minimum fluid temperature	- 25 °C
Maximum fluid temperature	+ 80 °C
Viscosity range	10 ... 500 mm^2/s (cSt)
Recommended viscosity range	15 ... 250 mm^2/s (cSt)
Minimum fluid cleanliness (cleanlineless class according to ISO 4406:1999)	class 20/18/15

Electric Characteristics	Description, value, unit
Actuator type	solenoid coil
Solenoid coils type	D36
Supply voltage DC	12/24 V DC
Supply voltage AC	115/230 V AC (50 ... 60 Hz)
Supply voltage tolerance	± 10 %
Maximum permissible power consumption	Version "E": V DC = 17 W / V AC = 17 W Version "N": V DC = 27 W / V AC = 25 W
Switching time	Version "E": 25...70 ms (energized) / 15...50 ms (de-energized) Version "N": 25...100 ms (energized) / 20...70 ms (de-energized)

Electric Characteristics	Description, value, unit
Relative duty cycle	100 %
Electrical connection coil	several connection types available, see ordering code
Protection class solenoid coil to ISO 20 653 / EN 60 529	several classes of protection available, see ordering code (with appropriate mating connector and proper fitting and sealing)

NOTE!
The switching time can be strongly dependent on flow rate, pressure, oil viscosity and the dwell time under pressure. In practice, the switching time may therefore deviate from the specified value range.

Performance graphs

measured with oil viscosity 33.0 mm²/s (cSt), coil at steady-state temperature and 10 % undervoltage

p = f (Q) Performance limit

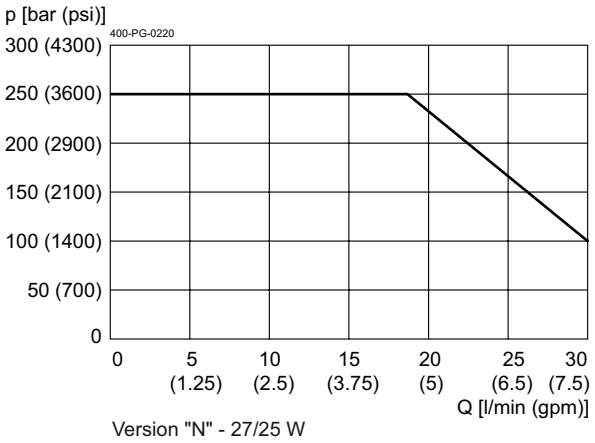

Version "N" - 27/25 W

p = f (Q) Performance limit

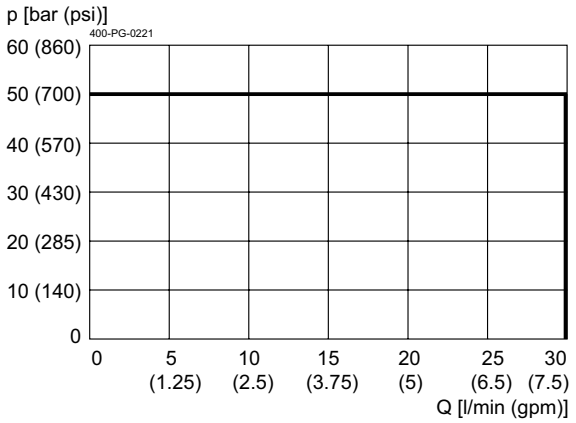

Version "E" - 17 W

Δp = f (Q) Pressure drop-flow rate characteristic

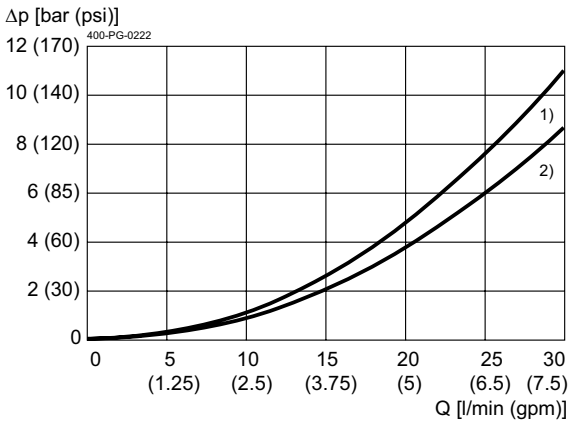

1) 1 → 2
2) 2 → 3

Dimensions and sectional view

Beispiel für die Masseinheit:
Example for the dimensional units:

0.79 = 0.79 mm millimeter
(.031) = 0.031" inch

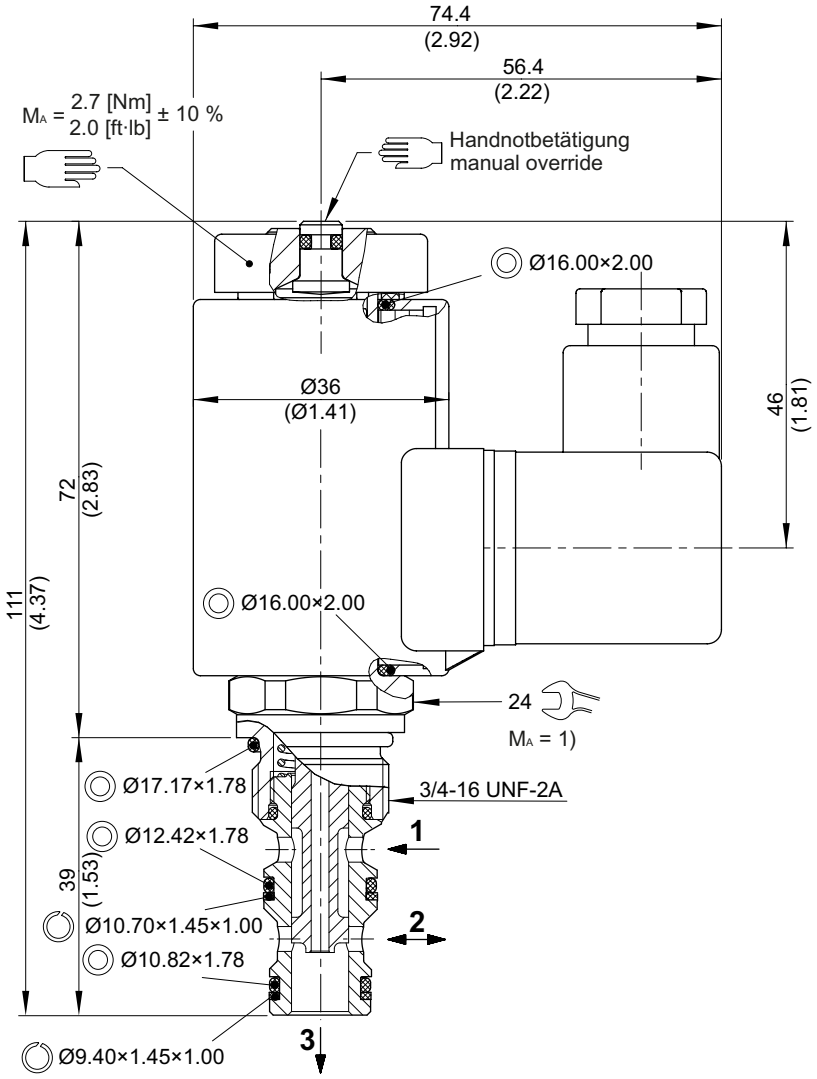

Installation information

NOTE!
1) When fitting the screw-in cartridge valve, use the specified tightening torque. The value can be found in the chapter "technical data".

NOTE!
The seals are not available individually. The seal kit order number can be found in the chapter "Technical data".

ATTENTION!
Only qualified personnel with mechanical skills may carry out any maintenance work. Generally, the only work that should ever be undertaken is to check, and possibly replace, the seals. When changing seals, oil or grease the new seals thoroughly before fitting them.

Ordering code

Ex. W K 32G N A 5 _ - 2 24 D _

W	=	directional valve
K	=	spool-type, direct acting
32G	=	3-way/2-position, de-energized closed
N	=	electrically operated, V DC = 27 W / V AC = 25 W
E	=	electrically operated, V DC = 17 W / V AC = 17 W
A ... Q	=	standard model according to valid data sheet *(standard)*
Z ... R	=	special model after consultation
5	=	nominal size 5
(blank)	=	NBR (nitril-butadien-rubber / BUNA) seals *(standard)*
V	=	FKM (fluorocarbon rubber / VITON) seals *(special seals - please consult BUCHER)*
1 ... 9	=	technical design no. (omit when ordering)
...	=	voltage e.g. 24 (24 V)
D	=	current DC
A	=	current AC
(blank)	=	DIN EN 175301-803 connection, 3-pole 2 P+E with mating plug, IP 65 *(standard)*
M100	=	DIN EN 175301-803 connection, 3-pole 2 P+E
C	=	Kostal plug connection (IP 65)
JT	=	Junior Timer radial plug connection (with protection diode, IP 65)
IT	=	Junior Timer axial plug connection (with protection diode, IP 65)
D	=	Deutsch plug connection DT04-2P (IP 67/69K)
DT	=	Deutsch plug connection DT04-2P (with protection diode, IP 67/69K)
S	=	AMP Superseal 1.5 (IP 67) / Metri-Pack 150 (IP 65) plug connection
F	=	flying leads (500 mm)

mating plug not supplied

Related data sheets

Reference	Description
400-P-040011	Forming tools
400-P-040181	Cavity AM
400-P-720111	Threaded port body GAMA
400-P-120110	Solenoid coil D36
400-P-010101	MTTFD Values for Hydraulic Valves

info.ch@bucherhydraulics.com **www.bucherhydraulics.com**

© 2021 by Bucher Hydraulics AG Frutigen, 3714 Frutigen, Switzerland

All rights reserved.
Data is provided for the purpose of product description only, and must not be construed as warranted characteristics in the legal sense. The information does not relieve users from the duty of conducting their own evaluations and tests. Because the products are subject to continual improvement, we reserve the right to amend the product specifications contained in this catalogue.

BUCHER hydraulics
WWW.SUMY.IR

General information
Cavity

Type series: AU/C1030

Dimensions and sectional view

Beispiel für die Masseinheit:
Example for the dimensional units:
0.79 = 0.79 mm millimeter

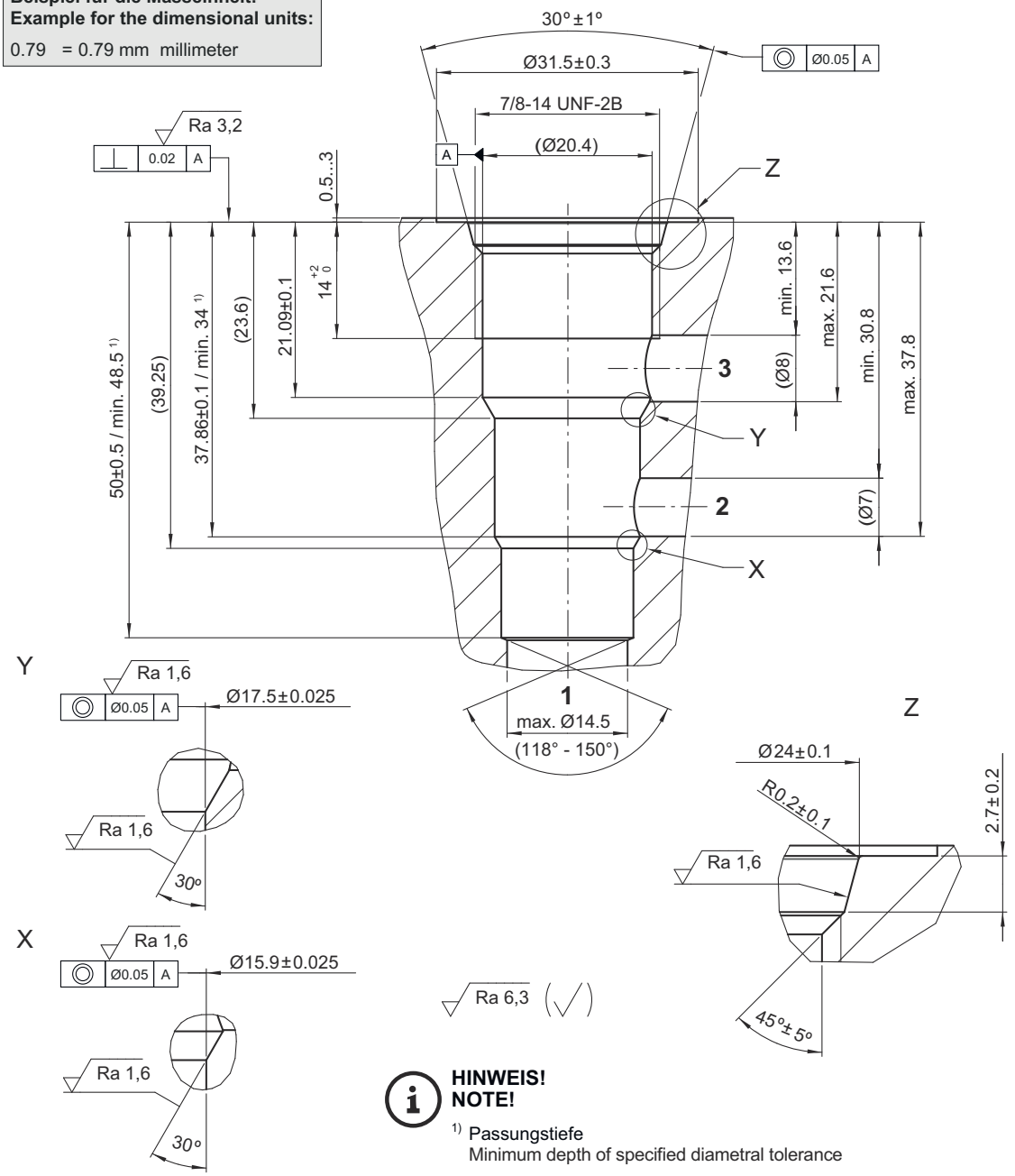

HINWEIS!
NOTE!

1) Passungstiefe
Minimum depth of specified diametral tolerance

WWW.SUMY.IR

Installation information

ATTENTION!
You must maintain the specified positional and diametral tolerances. To ensure trouble-free operation of the screw-in cartridges, we strongly recommend that pilot drilling, boring, reaming and cavity thread-cutting are always performed in one setup.

NOTE!
Cavity type to factory standard.

NOTE!
We offer form tool sets for sale or hire. See data sheet 400-P-040011 for further information.

info.ch@bucherhydraulics.com **www.bucherhydraulics.com**

© 2025 by Bucher Hydraulics AG Frutigen, 3714 Frutigen, Switzerland

All rights reserved.
Data is provided for the purpose of product description only, and must not be construed as warranted characteristics in the legal sense. The information does not relieve users from the duty of conducting their own evaluations and tests. Because the products are subject to continual improvement, we reserve the right to amend the product specifications contained in this catalogue.

BUCHER hydraulics

WWW.SUMY.IR

Directional valve 3-way/2-position

Q_{max} = 40 l/min, p_{max} = 350 bar
Direct acting, spool type, switching solenoid
Type series: WKDP32G-8U-...

- Screw-in cartridge valve for cavity AU/C1030
- All external parts with zinc-nickel plating according to DIN EN ISO 19598
- Installation in threaded port body type GAU-12
- Fits common cavity according to ISO and NFPA
- Reliable switching, even after long dwell times
- Low head loss
- Optional with manual override
- The slip-on coil can be rotated, and it can be replaced without opening the hydraulic envelope
- High pressure wet-armature solenoids
- Various plug-connector systems and voltages are available

Symbol

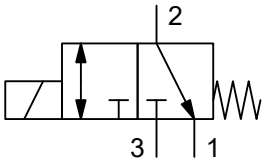

Description

The 3-way/2-position solenoid operated spool valves, series WKDP32G..., are NG 8, direct acting, pressure balanced screw-in valves with a 7/8-14 UNF mounting thread. They are designed on the proven sliding-spool principle. The straightforward design delivers an outstanding price/performance ratio. All external parts of the screw-in valves are zinc-nickel plated and are thus suitable for use in the harshest operating environments.

The slip-on coils can be replaced without opening the hydraulic envelope and can be positioned at any angle through 360°. These valves are primarily used in mobile and industrial applications as pilot valves for controlling the travel direction of actuators such as hydraulic motors and cylinders. For self-assembly, please refer to the section related data sheets.

Technical data

General characteristics	Description, value, unit
Function group	directional valve
Function	3-way/2-position
Design	screw-in cartridge valve
Controls	switching solenoid
Characteristic	direct acting, spool type
MTTFd value	150 years
Construction size	NG 8 / SAE 10
Thread size	7/8-14 UNF-2A
Mounting attitude	unrestricted
Weight	0.54 kg
Cavity acc. ISO	fits into ISO 17209: 7/8-03-0-13
Cavity acc. NFPA	fits into NFPA/T3.5.50: 0.875-03-0-09
Cavity acc. factory standard	AU/C1030
Tightening torque steel	80 Nm
Tightening torque aluminium	80 Nm
Tightening torque tolerance	± 10 %
Minimum ambient temperature	- 30 °C
Maximum ambient temperature	+ 50 °C
Surface protection	all external parts with zinc-nickel plating according to DIN EN ISO 19598
Sealing material	see ordering code
Seal kit order number	NBR: DS-519-N / FKM: DS-519-V

Hydraulic characteristics	Description, value, unit
Maximum operating pressure	350 bar
Maximum flow rate	40 l/min
Flow direction	see symbol
Hydraulic fluid	HL and HLP mineral oil according to DIN 51 524; other fluids on request!
Minimum fluid temperature	- 30 °C
Maximum fluid temperature	+ 80 °C
Viscosity range	10 ... 500 mm^2/s (cSt)
Recommended viscosity range	15 ... 250 mm^2/s (cSt)
Minimum fluid cleanliness (cleanlineless class according to ISO 4406:1999)	class 20/18/15

Electric characteristics	Description, value, unit
Actuator type	solenoid coil
Solenoid coils type	36X48/16.1
Supply voltage DC	12/24 V DC
Supply voltage AC	115/230 (50 ... 60 Hz) V AC
Supply voltage tolerance	± 10 %
Nominal power consumption	19 W
Switching time	Switching time measured at: UN: Δp = 280 bar; Q = 32 l/min; TAmbient = 20 °C; ϑ = 46 mm2/s) / 3 to 2: 21 ms (energizing) 26 ms (de-energizing), 2 to 1: 29 ms (energizing) 25 (de-energizing), 2 to 3: 29 ms (energizing) 38 (de-energizing)
Relative duty cycle	100 %
Electrical connection coil	several connection types available, see ordering code
Protection class solenoid coil to ISO 20 653 / EN 60 529	several classes of protection available, see ordering code (with appropriate mating connector and proper fitting and sealing)

NOTE!
The switching time can be strongly dependent on flow rate, pressure, oil viscosity and the dwell time under pressure. In practice, the switching time may therefore deviate from the specified value range.

Performance graphs

measured with oil viscosity 33.0 mm²/s (cSt), coil at steady-state temperature and 10 % undervoltage

p = f (Q) Performance limit

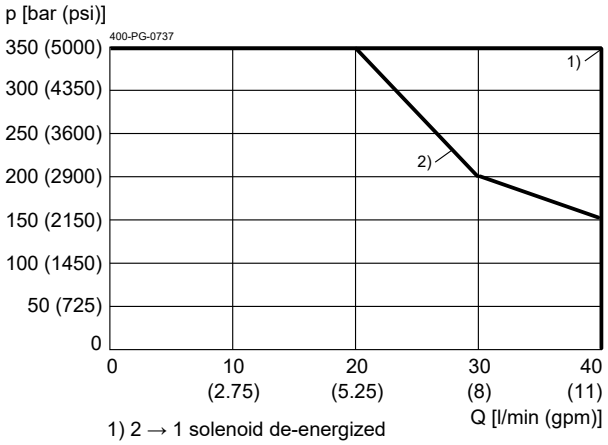

1) 2 → 1 solenoid de-energized
2) 2 ↔ 3 solenoid energized

Δp = f (Q) Pressure drop-flow rate characteristic

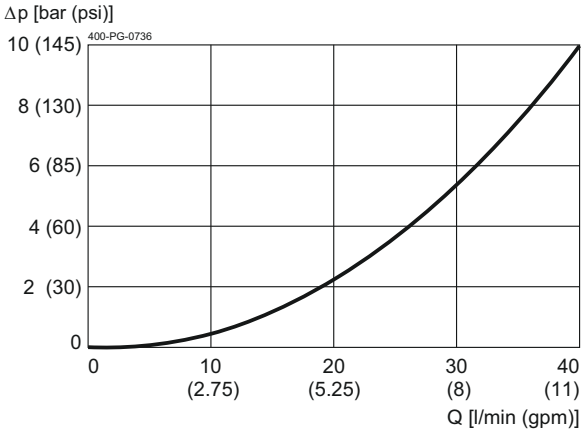

Installation

Beispiel für die Masseinheit:
Example for the dimensional units:

0.79 = 0.79 mm millimeter
(.031) = 0.031" inch

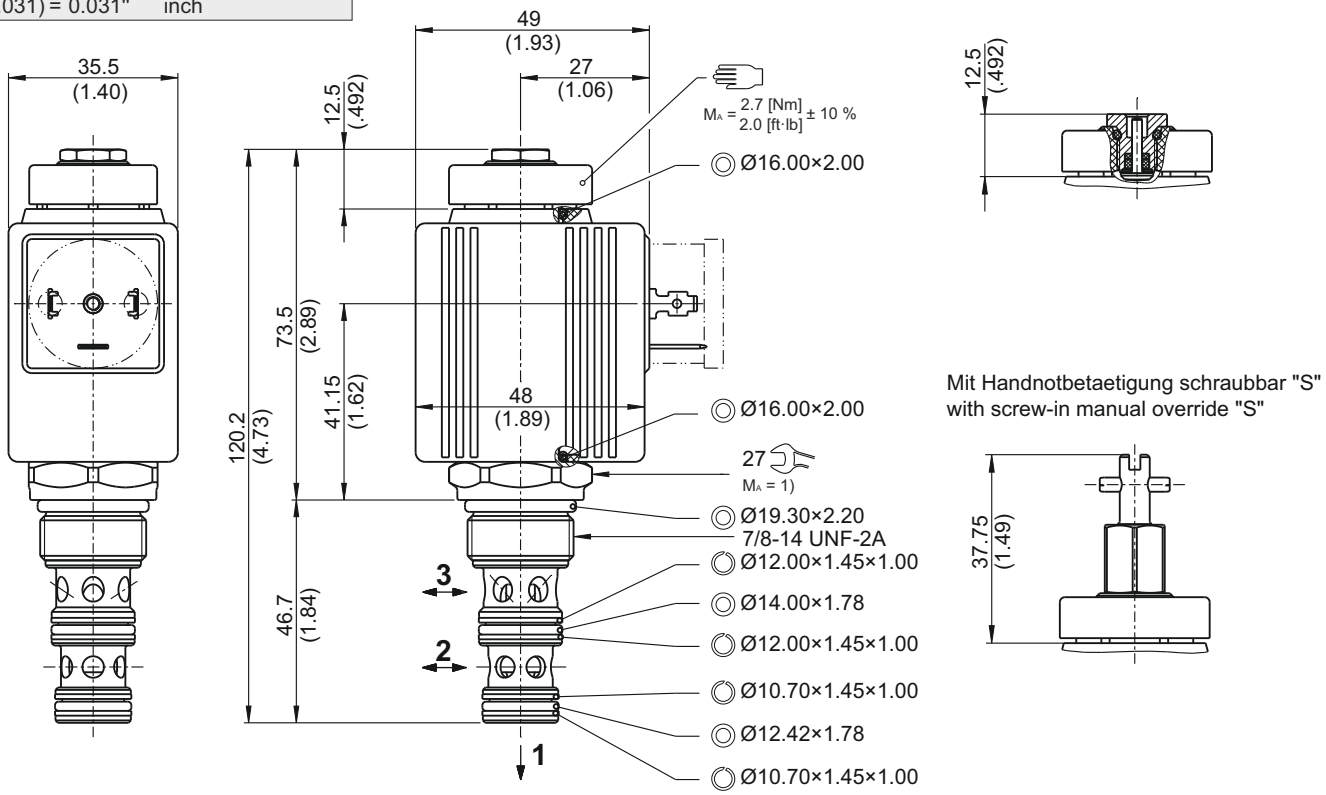

NOTE!
1) When fitting the screw-in cartridge valve, use the specified tightening torque. The value can be found in the chapter "Technical data".

ATTENTION!
Only qualified personnel with mechanical skills may carry out any maintenance work. Generally, the only work that should ever be undertaken is to check, and possibly replace, the seals. When changing seals, oil or grease the new seals thoroughly before fitting them.

NOTE!
The seals are not available individually. The seal kit order number can be found in the chapter "Technical data".

Ordering code

Ex. W K D P 32G - 8 U - O - N A 1 24 D G _

W	=	directional valve
K	=	spool-type
D	=	direct acting
P	=	electrically operated, V DC = 19 W
32G	=	3-way/2-position, normally closed
8	=	nominal size 8 / SAE 10
U	=	cavity type AU/C1030
O	=	without manual override **(standard)**
P	=	with manual override
S	=	with screwable manual override
N	=	NBR (nitril-butadien-rubber / BUNA) seals **(standard)**
V	=	FKM (fluorocarbon rubber / VITON) seals (special seals on request)
A ... Q	=	standard model according to valid data sheet
Z ... R	=	special model (on request)
1 … 9	=	technical design no. (omit when ordering)
…	=	voltage e.g. 24 (24 V)
D	=	current DC
G	=	DIN EN 175301-803 connection, 3-pole 2 P+E, without mating plug (IP65) **(standard)**
GR	=	DIN EN 175301-803 connection, 3-pole 2 P+E, without mating plug (with protection diode, IP65)
		for the following plug-variants, please consult BUCHER:
J	=	Junior Timer radial plug connection (IP 65)
JR	=	Junior Timer radial plug connection (with protection diode, IP 65)
U	=	Deutsch plug connection DT04-2P, 2-pole radial (IP 67/69)
UR	=	Deutsch plug connection DT04-2P, 2-pole radial (with protection diode, IP 67/69)
without	=	connection without mating plug
Q	=	only connection “G“ with mating plug

Related data sheets

Reference	Description
400-P-040011	form tools
400-P-040291	cavity AU/C1030
400-P-738121	threaded port body GAU-12-...
400-P-120112	solenoid coil 36X48/16.1
400-P-010101	MTTFd Values for Hydraulic Valves

info.ch@bucherhydraulics.com **www.bucherhydraulics.com**

© 2026 by Bucher Hydraulics AG Frutigen, 3714 Frutigen, Switzerland

All rights reserved.
Data is provided for the purpose of product description only, and must not be construed as warranted characteristics in the legal sense. The information does not relieve users from the duty of conducting their own evaluations and tests. Because the products are subject to continual improvement, we reserve the right to amend the product specifications contained in this catalogue.

BUCHER hydraulics

WWW.SUMY.IR

Directional valve 3-way/2-position

Q_{max} = 5 l/min, p_{max} = 420 bar
switching solenoid with emergency override, direct acting, spool type
Type series: WKP32OLA1...

- Screw-in cartridge valve
- For cavity AM
- All external parts with zinc-nickel plating according to DIN EN ISO 19598
- Installation in threaded port body type GAMA
- The slip-on coil can be rotated, and it can be replaced without opening the hydraulic envelope
- "Low watt" version
- High pressure wet-armature solenoids
- Various plug-connector systems and voltages are available
- Can be used as a high-pressure pilot valve
- With manual override

Description

The 3-way/2-position solenoid operated spool valves, series WKP32..., are size 1, direct acting, pressure balanced screw-in valves with a 3/4-16 UNF-2A mounting thread. They are designed on the proven sliding-spool principle. The straightforward design delivers an outstanding price/performance ratio. All external parts of the screw-in valves are zinc-nickel plated, and are thus suitable for use in the harshest operating environments. The slip-on coils can be replaced without opening the hydraulic envelope and can be positioned at any angle through 360°. These valves are primarily used in mobile and industrial applications as pilot valves for controlling the travel direction of actuators such as hydraulic motors and cylinders. For self-assembly, please refer to the section related data sheets.

Symbol

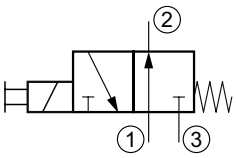

Technical data

General Characteristics	Description, value, unit
Function group	Directional valve
Function	3-way/2-position
Design	Screw-in cartridge valve
Controls	switching solenoid with emergency override
Characteristic	direct acting, spool type
Construction size	nominal size 1
Thread size	3/4-16 UNF-2A
Mounting attitude	unrestricted
Weight	0.48 kg
Cavity acc. factory standard	For cavity AM
Tightening torque steel	60 Nm
Tightening torque aluminium	60 Nm
Tightening torque tolerance	± 10 %
Minimum ambient temperature	- 25 °C
Maximum ambient temperature	+ 50 °C
Surface protection	All external parts with zinc-nickel plating according to DIN EN ISO 19598
Sealing material	see ordering code
Seal kit order number	NBR: DS-247-N / FKM: DS-247-V

Hydraulic Characteristics	Description, value, unit
Maximum operating pressure	420 bar
Restriction of the operating pressure	at port 3 max. 250 bar
Maximum flow rate	5 l/min
Flow direction	see symbol
Hydraulic fluid	HL and HLP mineral oil according to DIN 51 524; other fluids on request!
Minimum fluid temperature	- 25 °C
Maximum fluid temperature	+ 80 °C
Viscosity range	10 ... 500 mm^2/s (cSt)
Recommended viscosity range	15 ... 250 mm^2/s (cSt)
Minimum fluid cleanliness (cleanlineless class according to ISO 4406:1999)	class 20/18/15

Electric Characteristics	Description, value, unit
Actuator type	solenoid coil
Solenoid coils type	D36
Supply voltage DC	12/24 V DC
Supply voltage tolerance	± 10 %
Maximum permissible power consumption	8 W
Relative duty cycle	100 %
Electrical connection coil	several connection types available, see ordering code
Protection class solenoid coil to ISO 20 653 / EN 60 529	several classes of protection available, see ordering code (with appropriate mating connector and proper fitting and sealing)

Performance graphs

measured with oil viscosity 33.0 mm²/s (cSt), coil at steady-state temperature and 10 % undervoltage

p = f (Q) Performance limit

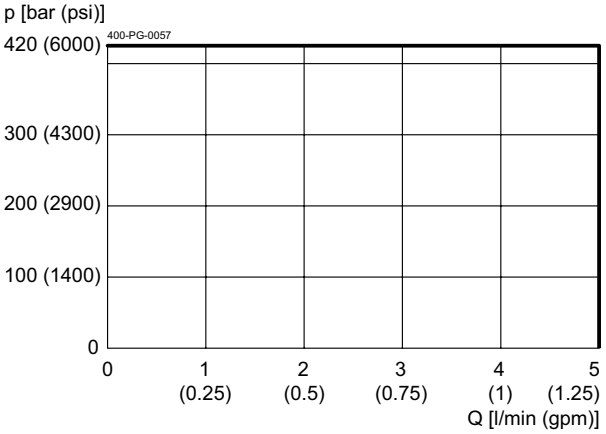

Δp = f (Q) Pressure drop-flow rate characteristic

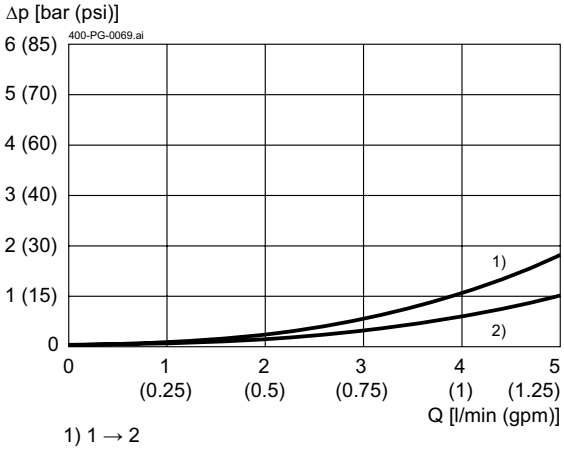

1) 1 → 2
2) 2 → 3

Dimensions and sectional view

Beispiel für die Masseinheit:
Example for the dimensional units:

0.79 = 0.79 mm millimeter
(.031) = 0.031" inch

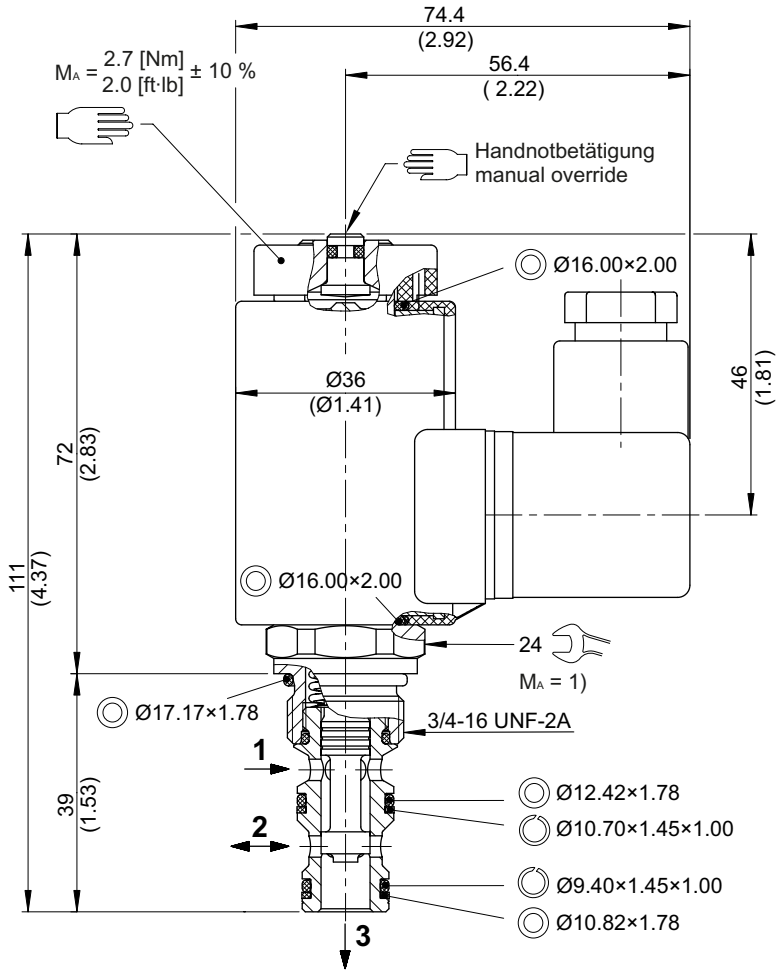

Installation information

NOTE!
1) When fitting the screw-in cartridge valve, use the specified tightening torque. The value can be found in the chapter "Technical data".

NOTE!
The seals are not available individually. The seal kit order number can be found in the chapter "Technical data".

ATTENTION!
Only qualified personnel with mechanical skills may carry out any maintenance work. Generally, the only work that should ever be undertaken is to check, and possibly replace, the seals. When changing seals, oil or grease the new seals thoroughly before fitting them.

Ordering code

Ex. W K P 32O L A 1 _ - 2 24 D _

W	=	directional valve
K	=	spool-type, direct acting
P	=	high-pressure version (420 bar)
32O	=	3-way/2-position, de-energized open
L	=	electrically operated, VDC = 8 W
A ... Q	=	standard model according to valid data sheet *(standard)*
Z ... R	=	special model after consultation
1	=	nominal size 1 (preferably as pilot valve)
(blank)	=	NBR (nitril-butadien-rubber / BUNA) seals *(standard)*
V	=	FKM (fluorocarbon rubber / VITON) seals *(special seals - please consult BUCHER)*
1 ... 9	=	technical design no. (omit when ordering)
...	=	voltage e.g. 24 (24 V)
D	=	current DC
(blank)	=	DIN EN 175301-803 connection, 3-pole 2 P+E with mating plug, IP 65 *(standard)*
M100	=	DIN EN 175301-803 connection, 3-pole 2 P+E *the following plug-variant on request:*
DT	=	Deutsch plug connection DT04-2P (with protection diode, IP 67/69K), mating plug not included

Related data sheets

Reference	Description
400-P-040011	Forming tools
400-P-040181	Cavity AM
400-P-720111	Threaded port body GAMA
400-P-120110	Solenoid coil D36

info.ch@bucherhydraulics.com **www.bucherhydraulics.com**

© 2022 by Bucher Hydraulics AG Frutigen, 3714 Frutigen, Switzerland

All rights reserved.
Data is provided for the purpose of product description only, and must not be construed as warranted characteristics in the legal sense. The information does not relieve users from the duty of conducting their own evaluations and tests. Because the products are subject to continual improvement, we reserve the right to amend the product specifications contained in this catalogue.

BUCHER hydraulics

WWW.SUMY.IR

Directional valve 3-way/2-position

Q_{max} = 10 l/min, p_{max} = 420 bar
Direct acting, spool type, switching solenoid with emergency override
Type series: WKP32ONA3...

- Screw-in cartridge valve for cavity AM
- All external parts with zinc-nickel plating according to DIN EN ISO 19598
- Installation in threaded port body type GAMA
- Can be used as a high-pressure pilot valve
- With manual override
- The slip-on coil can be rotated, and it can be replaced without opening the hydraulic envelope
- High pressure wet-armature solenoids
- Various plug-connector systems and voltages are available

Symbol

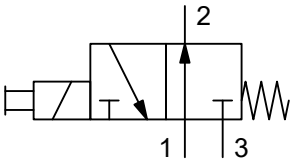

Description

The 3-way/2-position solenoid operated spool valves, series WKP32..., are size 3, direct acting, pressure balanced screw-in valves with a 3/4-16 UNF mounting thread. They are designed on the proven sliding-spool principle. The straightforward design delivers an outstanding price/performance ratio. All external parts of the screw-in valves are zinc-nickel plated and are thus suitable for use in the harshest operating environments.

The slip-on coils can be replaced without opening the hydraulic envelope and can be positioned at any angle through 360°. These valves are primarily used in mobile and industrial applications as pilot valves for controlling the travel direction of actuators such as hydraulic motors and cylinders. For self-assembly, please refer to the section related data sheets.

Technical data

General characteristics	Description, value, unit
Function group	directional valve
Function	3-way/2-position
Design	screw-in cartridge valve
Controls	switching solenoid with emergency override
Characteristic	direct acting, spool type
MTTFd value	150 years
Construction size	NG 3
Thread size	3/4-16 UNF-2A
Mounting attitude	unrestricted
Weight	0.48 kg
Cavity acc. factory standard	AM
Tightening torque steel	60 Nm
Tightening torque aluminium	60 Nm
Tightening torque tolerance	± 10 %
Minimum ambient temperature	- 25 °C
Maximum ambient temperature	+ 50 °C
Surface protection	all external parts with zinc-nickel plating according to DIN EN ISO 19598
Sealing material	see ordering code
Seal kit order number	NBR: DS-247-N / FKM: DS-247-V

Hydraulic characteristics	Description, value, unit
Maximum operating pressure	420 bar
Restriction of the operating pressure	at port 3 max. 250 bar
Maximum flow rate	10 l/min
Flow direction	see symbol
Hydraulic fluid	HL and HLP mineral oil according to DIN 51 524; other fluids on request!
Minimum fluid temperature	- 25 °C
Maximum fluid temperature	+ 80 °C
Viscosity range	10 ... 500 mm^2/s (cSt)
Recommended viscosity range	15 ... 250 mm^2/s (cSt)
Minimum fluid cleanliness (cleanlineless class according to ISO 4406:1999)	class 20/18/15

Electric characteristics	Description, value, unit
Actuator type	solenoid coil
Solenoid coils type	D36
Supply voltage DC	12/24 V DC
Supply voltage AC	115/230 (50 ... 60 Hz) V AC
Supply voltage tolerance	± 10 %
Nominal power consumption	V DC = 27 W / V AC = 25 W
Relative duty cycle	100 %
Electrical connection coil	several connection types available, see ordering code
Protection class solenoid coil to ISO 20 653 / EN 60 529	several classes of protection available, see ordering code (with appropriate mating connector and proper fitting and sealing)

Performance graphs

measured with oil viscosity 33.0 mm²/s (cSt), coil at steady-state temperature and 10 % undervoltage

p = f (Q) Performance limit

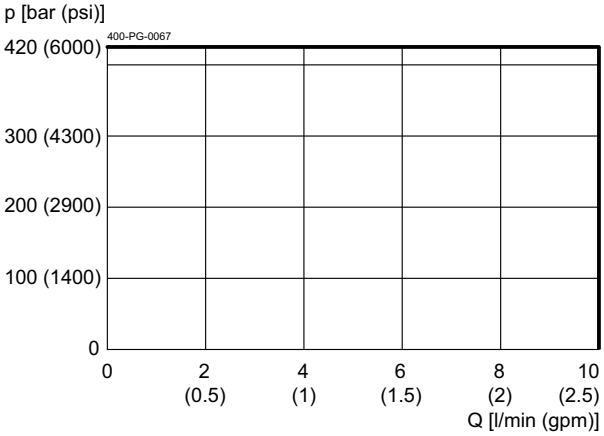

Δp = f (Q) Pressure drop-flow rate characteristic

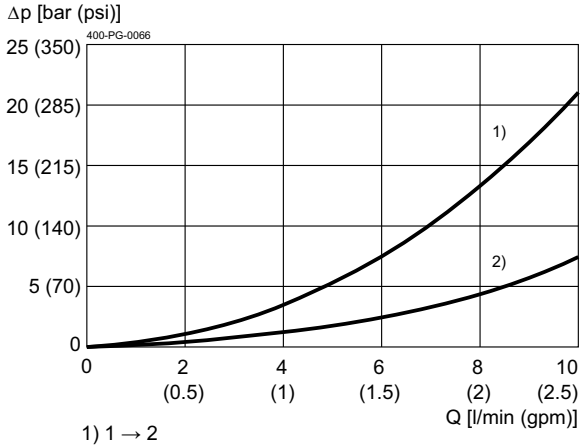

1) 1 → 2
2) 2 → 3

Installation

Beispiel für die Masseinheit:
Example for the dimensional units:

0.79 = 0.79 mm millimeter
(.031) = 0.031" inch

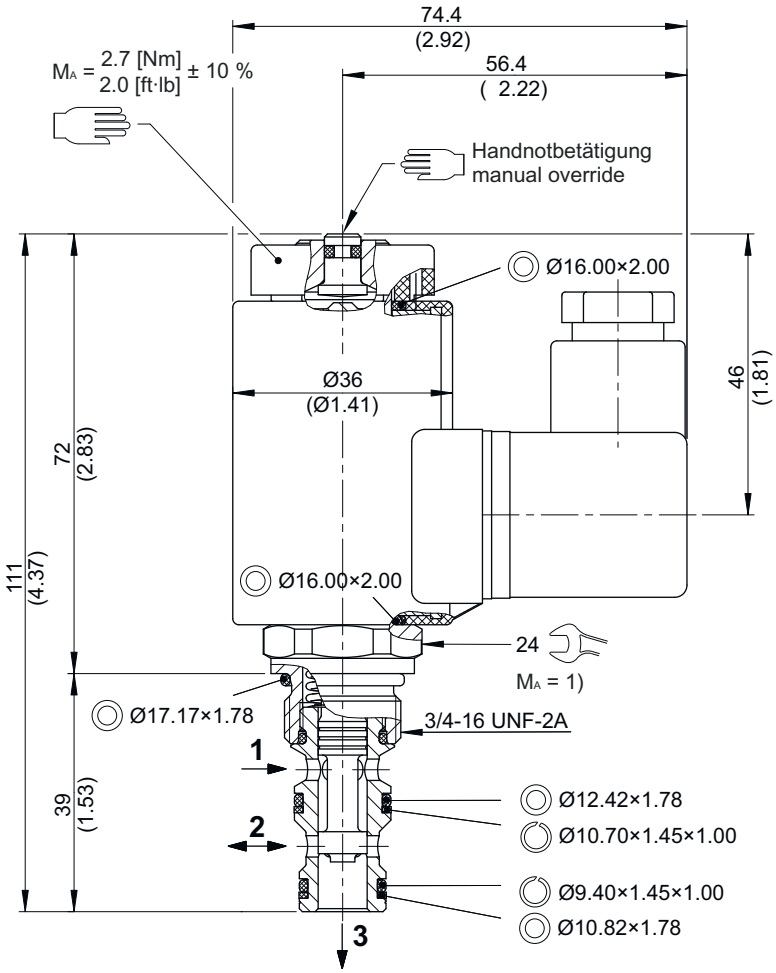

NOTE!
1) When fitting the screw-in cartridge valve, use the specified tightening torque. The value can be found in the chapter "Technical data".

ATTENTION!
Only qualified personnel with mechanical skills may carry out any maintenance work. Generally, the only work that should ever be undertaken is to check, and possibly replace, the seals. When changing seals, oil or grease the new seals thoroughly before fitting them.

NOTE!
The seals are not available individually. The seal kit order number can be found in the chapter "Technical data".

Ordering code

Ex. W K P 32O N A 3 _ - 2 24 D _

W	=	directional valve
K	=	spool-type, direct acting
P	=	high-pressure version (420 bar)
32O	=	3-way/2-position, de-energized open
N	=	electrically operated, VDC = 27 W / V AC = 25 W
A ... Q	=	standard model according to valid data sheet *(standard)*
Z ... R	=	special model after consultation
3	=	nominal size 3 (preferably as pilot valve)
(blank)	=	NBR (nitril-butadien-rubber / BUNA) seals *(standard)*
V	=	FKM (fluorocarbon rubber / VITON) seals *(special seals - please consult BUCHER)*
1 ... 9	=	technical design no. (omit when ordering)
...	=	voltage e.g. 24 (24 V)
D	=	current DC
A	=	current AC
(blank)	=	DIN EN 175301-803 connection, 3-pole 2 P+E with mating plug, IP 65 *(standard)*
M100	=	DIN EN 175301-803 connection, 3-pole 2 P+E
C	=	Kostal plug connection (IP 65)
JT	=	Junior Timer radial plug connection (with protection diode, IP 65)
IT	=	Junior Timer axial plug connection (with protection diode, IP 65)
D	=	Deutsch plug connection DT04-2P (IP 67/69K)
DT	=	Deutsch plug connection DT04-2P (with protection diode, IP 67/69K)
S	=	AMP Superseal 1.5 (IP 67) / Metri-Pack 150 (IP 65) plug connection
F	=	flying leads (500 mm)

mating plug not supplied

Related data sheets

Reference	Description
400-P-040011	form tools
400-P-040181	cavity AM
400-P-720111	threaded port body GAMA
400-P-120110	solenoid coil D36
400-P-010101	MTTFd Values for Hydraulic Valves

info.ch@bucherhydraulics.com **www.bucherhydraulics.com**

© 2026 by Bucher Hydraulics AG Frutigen, 3714 Frutigen, Switzerland

All rights reserved.
Data is provided for the purpose of product description only, and must not be construed as warranted characteristics in the legal sense. The information does not relieve users from the duty of conducting their own evaluations and tests. Because the products are subject to continual improvement, we reserve the right to amend the product specifications contained in this catalogue.

BUCHER hydraulics

WWW.SUMY.IR

Directional valve 3-way/2-position

Q_{max} = 30 l/min, p_{max} = 250 bar
switching solenoid with emergency override, direct acting, spool type
Type series: WK32O_A5...

- Screw-in cartridge valve
- For cavity AM
- All external parts with zinc-nickel coating according to DIN EN ISO 19598
- Installation in threaded port body type GAMA
- The slip-on coil can be rotated, and it can be replaced without opening the hydraulic envelope
- High pressure wet-armature solenoids
- Various plug-connector systems and voltages are available
- Optimized Δp values
- With manual override

Description

The 3-way/2-position solenoid operated spool valves, series WK32..., are size 5, direct acting, pressure balanced screw-in valves with a 3/4-16 UNF-2A mounting thread. They are designed on the proven sliding-spool principle. The straightforward design delivers an outstanding price/performance ratio and excellent pressure-drop/flow rate values. All external parts of the screw-in valves are zinc-nickel plated, and are thus suitable for use in the harshest operating environments. The slip-on coils can be replaced without opening the hydraulic envelope and can be positioned at any angle through 360°. These valves are mainly used in mobile and industrial applications as pilot valves for controlling the travel direction of actuators such as hydraulic motors and cylinders. For self-assembly, please refer to the section related data sheets.

Symbol

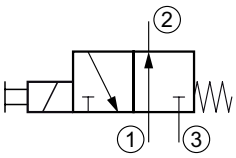

Technical Data

General Characteristics	Description, value, unit
Function group	Directional valve
Function	3-way/2-position
Design	Screw-in cartridge valve
Controls	switching solenoid with emergency override
Characteristic	direct acting, spool type
MTTFd value	150 years
Construction size	nominal size 5
Thread size	3/4-16 UNF-2A
Mounting attitude	unrestricted
Weight	0.4 kg
Cavity acc. factory standard	For cavity AM
Tightening torque steel	40 Nm
Tightening torque aluminium	40 Nm
Tightening torque tolerance	± 10 %
Minimum ambient temperature	- 25 °C
Maximum ambient temperature	+ 50 °C
Surface protection	All external parts with zinc-nickel coating according to DIN EN ISO 19598
Available seal types	several seal types available, see ordering code
Seal kit order number	NBR: DS-247-N / FKM: DS-247-V

Hydraulic Characteristics	Description, value, unit
Maximum operating pressure	250 bar
Restriction of the operating pressure	Version "E" - 17 W: max. 50 bar
Maximum flow rate	30 l/min
Flow direction	see symbol
Hydraulic fluid	HL and HLP mineral oil according to DIN 51 524; other fluids on request!
Minimum fluid temperature	- 25 °C
Maximum fluid temperature	+ 80 °C
Viscosity range	10 ... 500 mm^2/s (cSt)
Recommended viscosity range	15 ... 250 mm^2/s (cSt)
Minimum fluid cleanliness (cleanlineless class according to ISO 4406:1999)	class 20/18/15

Electric Characteristics	Description, value, unit
Actuator type	solenoid coil
Solenoid coils type	D36
Supply voltage DC	12/24 V DC
Supply voltage AC	115/230 V AC (50 ... 60 Hz)
Supply voltage tolerance	± 10 %
Maximum permissible power consumption	Version "E": V DC = 17 W / V AC = 17 W Version "N": V DC = 27 W / V AC = 25 W
Switching time	Version "E": 25...70 ms (energized) / 15...50 ms (de-energized) Version "N": 25...100 ms (energized) / 20...70 ms (de-energized)

Electric Characteristics	Description, value, unit
Relative duty cycle	100 %
Electrical connection coil	several connection types available, see ordering code
Protection class solenoid coil to ISO 20 653 / EN 60 529	several classes of protection available, see ordering code (with appropriate mating connector and proper fitting and sealing)

NOTE!
The switching time can be strongly dependent on flow rate, pressure, oil viscosity and the dwell time under pressure. In practice, the switching time may therefore deviate from the specified value range.

Performance graphs

measured with oil viscosity 33.0 mm²/s (cSt), coil at steady-state temperature and 10 % undervoltage

p = f (Q) Performance limit

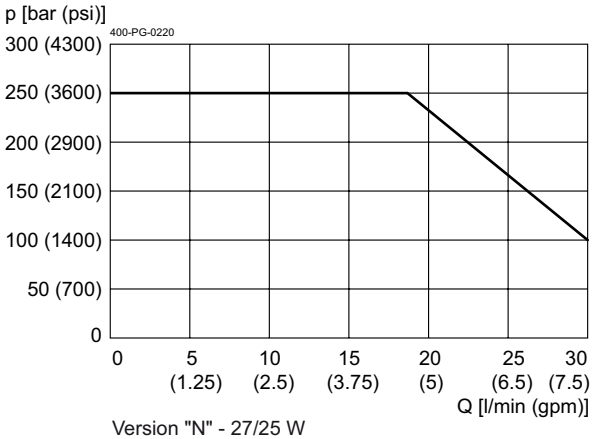

Version "N" - 27/25 W

p = f (Q) Performance limit

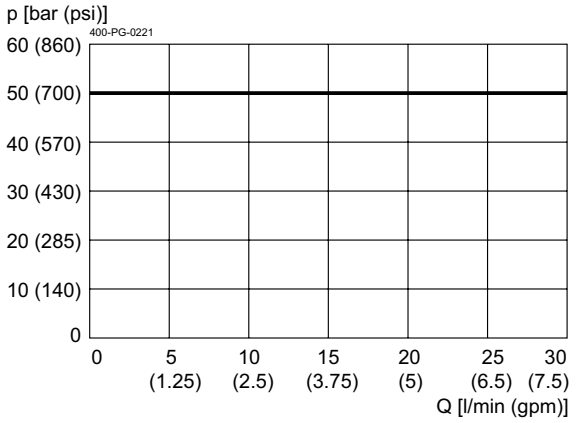

Version "E" - 17 W

Version "N" – 27/25W

Δp = f (Q) Pressure drop-flow rate characteristic

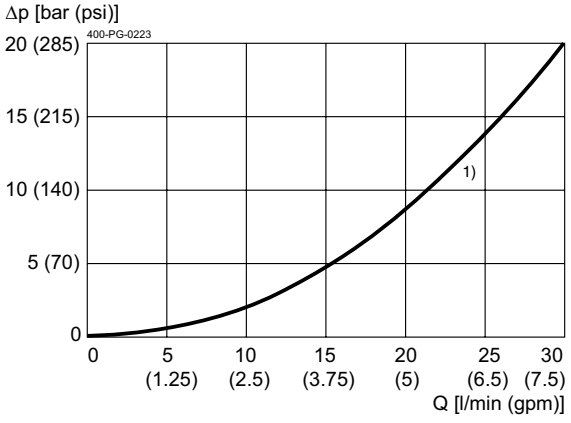

1) WK32**ON**A5...1 → 2...2 → 3

Version "E" – 17

Δp = f (Q) Pressure drop-flow rate characteristic

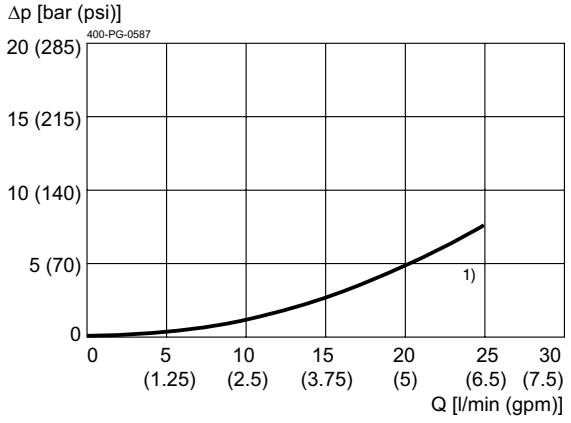

1) WK32**OE**A5...1 → 2...2 → 3

Dimensions and sectional view

Beispiel für die Masseinheit:
Example for the dimensional units:

0.79 = 0.79 mm millimeter
(.031) = 0.031" inch

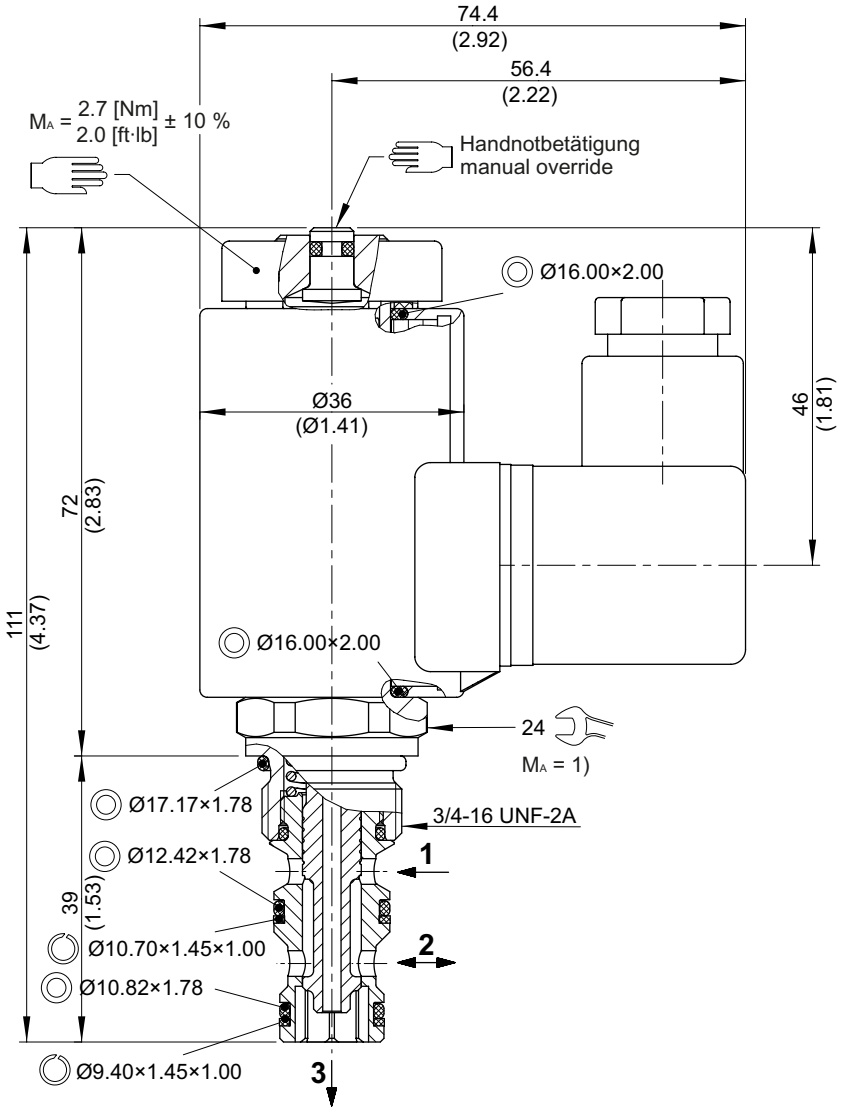

Installation information

NOTE!
1) When fitting the screw-in cartridge valve, use the specified tightening torque. The value can be found in the chapter "technical data".

NOTE!
The seals are not available individually. The seal kit order number can be found in the chapter "Technical data".

ATTENTION!
Only qualified personnel with mechanical skills may carry out any maintenance work. Generally, the only work that should ever be undertaken is to check, and possibly replace, the seals. When changing seals, oil or grease the new seals thoroughly before fitting them.

Ordering code

Ex. W | K | 32O | N | A | 5 | _ - 2 | 24 | D | _

W	=	directional valve
K	=	spool-type, direct acting
32O	=	3-way/2-position, de-energized open
N	=	electrically operated, V DC = 27 W / V AC = 25 W
E	=	electrically operated, V DC = 17 W / V AC = 17 W
A ... Q	=	standard model according to valid data sheet *(standard)*
Z ... R	=	special model after consultation
5	=	nominal size 5
(blank)	=	NBR (nitril-butadien-rubber / BUNA) seals *(standard)*
V	=	FKM (fluorocarbon rubber / VITON) seals *(special seals - please consult BUCHER)*
1 ... 9	=	technical design no. (omit when ordering)
...	=	voltage e.g. 24 (24 V)
D	=	current DC
A	=	current AC
(blank)	=	DIN EN 175301-803 connection, 3-pole 2 P+E with mating plug, IP 65 *(standard)*
M100	=	DIN EN 175301-803 connection, 3-pole 2 P+E
C	=	Kostal plug connection (IP 65)
JT	=	Junior Timer radial plug connection (with protection diode, IP 65)
IT	=	Junior Timer axial plug connection (with protection diode, IP 65)
D	=	Deutsch plug connection DT04-2P (IP 67/69K)
DT	=	Deutsch plug connection DT04-2P (with protection diode, IP 67/69K)
S	=	AMP Superseal 1.5 (IP 67) / Metri-Pack 150 (IP 65) plug connection
F	=	flying leads (500 mm)

mating plug not supplied

Related data sheets

Reference	Description
400-P-040011	Forming tools
400-P-040181	Cavity AM
400-P-720111	Threaded port body GAMA
400-P-120110	Solenoid coil D36
400-P-010101	MTTFD Values for Hydraulic Valves

info.ch@bucherhydraulics.com **www.bucherhydraulics.com**

© 2021 by Bucher Hydraulics AG Frutigen, 3714 Frutigen, Switzerland

All rights reserved.
Data is provided for the purpose of product description only, and must not be construed as warranted characteristics in the legal sense. The information does not relieve users from the duty of conducting their own evaluations and tests. Because the products are subject to continual improvement, we reserve the right to amend the product specifications contained in this catalogue.

BUCHER hydraulics

WWW.SUMY.IR

Directional valve 3-way/2-position

Q_{max} = 40 l/min, p_{max} = 350 bar
Direct acting, spool type, switching solenoid
Type series: WKDP32O-8U-...

- Screw-in cartridge valve for cavity AU/C1030
- All external parts with zinc-nickel plating according to DIN EN ISO 19598
- Installation in threaded port body type GAU-12
- Reliable switching, even after long dwell times
- Low head loss
- The slip-on coil can be rotated, and it can be replaced without opening the hydraulic envelope
- High pressure wet-armature solenoids
- Various plug-connector systems and voltages are available

Symbol

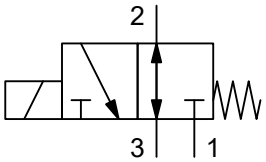

Description

The 3-way/2-position solenoid operated spool valves, series WKDP32O-8U..., are NG 8, direct acting, pressure balanced screw-in valves with a 7/8-14 UNF mounting thread. They are designed on the proven sliding-spool principle. The straightforward design delivers an outstanding price/performance ratio. All external parts of the screw-in valves are zinc-nickel plated and are thus suitable for use in the harshest operating environments.

The slip-on coils can be replaced without opening the hydraulic envelope and can be positioned at any angle through 360°. These valves are primarily used in mobile and industrial applications as pilot valves for controlling the travel direction of actuators such as hydraulic motors and cylinders. For self-assembly, please refer to the section related data sheets.

Technical data

General characteristics	Description, value, unit
Function group	directional valve
Function	3-way/2-position
Design	screw-in cartridge valve
Controls	switching solenoid
Characteristic	direct acting, spool type
MTTFd value	150 years
Construction size	NG 8 / SAE 10
Thread size	7/8-14 UNF-2A
Mounting attitude	unrestricted
Weight	0.94 kg
Cavity acc. factory standard	AU/C1030
Tightening torque steel	80 Nm
Tightening torque aluminium	80 Nm
Tightening torque tolerance	± 10 %
Minimum ambient temperature	- 30 °C
Maximum ambient temperature	+ 50 °C
Surface protection	all external parts with zinc-nickel plating according to DIN EN ISO 19598
Sealing material	see ordering code
Seal kit order number	NBR: DS-519-N / FKM: DS-519-V

Hydraulic characteristics	Description, value, unit
Maximum operating pressure	350 bar
Maximum flow rate	40 l/min
Flow direction	see symbol
Hydraulic fluid	HL and HLP mineral oil according to DIN 51 524; other fluids on request!
Minimum fluid temperature	- 30 °C
Maximum fluid temperature	+ 80 °C
Viscosity range	10 ... 500 mm^2/s (cSt)
Recommended viscosity range	15 ... 250 mm^2/s (cSt)
Minimum fluid cleanliness (cleanlineless class according to ISO 4406:1999)	class 20/18/15

Electric characteristics	Description, value, unit
Actuator type	solenoid coil
Solenoid coils type	36X48/16.1
Supply voltage DC	12/24 V DC
Supply voltage AC	115/230 (50 ... 60 Hz) V AC
Supply voltage tolerance	± 10 %
Nominal power consumption	19 W
Switching time	Switching time measured at: UN: Δp = 200 bar; Q = 30 l/min; TAmbient = 20 °C; ϑ = 46 mm2/s) 3 to 2: 50 ms (energizing) 30 ms (de-energizing) 2 to 1: 100 ms (energizing) 20 (de-energizing) 2 to 3: 60 ms (energizing) 40 (de-energizing)
Relative duty cycle	100 %
Electrical connection coil	several connection types available, see ordering code
Protection class solenoid coil to ISO 20 653 / EN 60 529	several classes of protection available, see ordering code (with appropriate mating connector and proper fitting and sealing)

NOTE!
The switching time can be strongly dependent on flow rate, pressure, oil viscosity and the dwell time under pressure. In practice, the switching time may therefore deviate from the specified value range.

Performance graphs

measured with oil viscosity 33.0 mm²/s (cSt), coil at steady-state temperature and 10 % undervoltage

p = f (Q) Performance limit

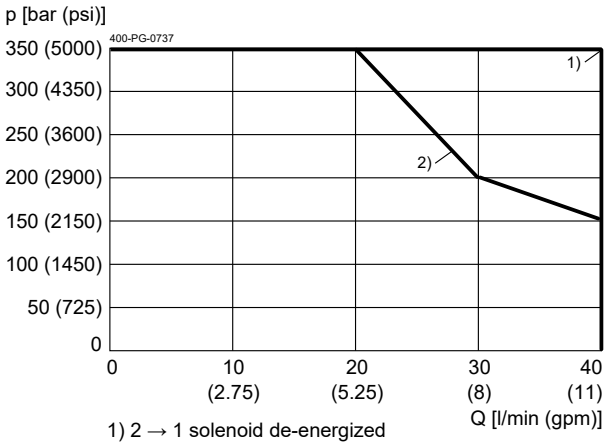

1) 2 → 1 solenoid de-energized
2) 2 ↔ 3 solenoid energized

Δp = f (Q) Pressure drop-flow rate characteristic

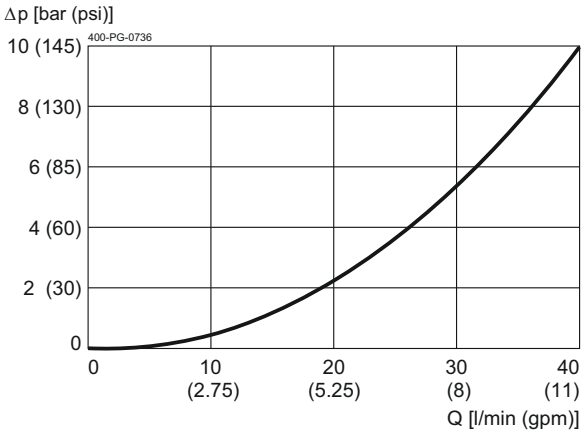

Installation

Beispiel für die Masseinheit:
Exampel for the dimensional units:

0.79 = 0.79 mm millimeter
(.031) = 0.031" inch

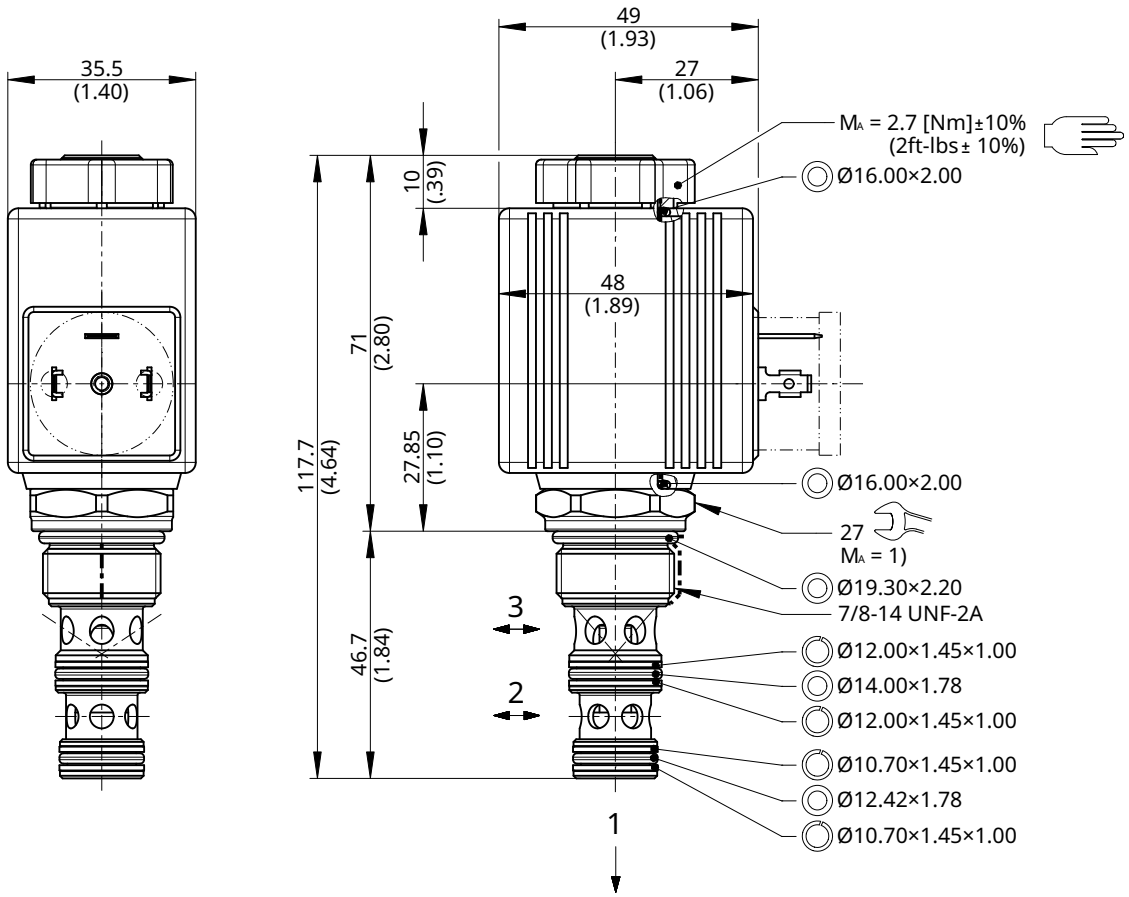

NOTE!
1) When fitting the screw-in cartridge valve, use the specified tightening torque. The value can be found in the chapter "Technical data".

ATTENTION!
Only qualified personnel with mechanical skills may carry out any maintenance work. Generally, the only work that should ever be undertaken is to check, and possibly replace, the seals. When changing seals, oil or grease the new seals thoroughly before fitting them.

NOTE!
The seals are not available individually. The seal kit order number can be found in the chapter "Technical data".

Ordering code

Ex. W K D P 32 O - 8 U - N A 1 - 24 D G _

W	=	directional valve
K	=	spool-type
D	=	direct acting
P	=	electrically operated, COIL 36X48, 19 W
32	=	3-way/2-position
O	=	de-energized open
8	=	nominal size 8 / SAE 10
U	=	cavity type AU/C1030
N	=	NBR (nitril-butadien-rubber / BUNA) seals **(standard)**
V	=	FKM (fluorocarbon rubber / VITON) seals (special seals on request)
A ... Q	=	standard model according to valid data sheet
Z ... R	=	special model (on request)
1 ... 9	=	technical design no. (omit by ordering)
...	=	voltage e.g. 24 (24 V)
D	=	current DC
G	=	DIN EN 175301-803 connection, 3-pole 2 P+E **(standard)**, (IP 65)
GR	=	DIN EN 175301-803 connection, 3-pole 2 P+E, with protection diode, (IP 65)
J	=	Junior Timer plug connection, 2-pole radial, (IP 65)
JR	=	Junior Timer plug connection, 2-pole radial, with protection diode, (IP 65)
U	=	Deutsch plug connection DT04-2P, 2-pole radial, (IP 67/69K)
UR	=	Deutsch plug connection DT04-2P, 2-pole radial, with protection diode, (IP 67/69K)
		other plug-variants, please consult BUCHER.
(blank)	=	connection without mating plug **(standard)**
Q	=	only connection “G“ and “GR“ with mating plug

mating plug not supplied

IMPORTANT!
Not every combination of voltage values and plug connections available.

Related data sheets

Reference	Description
400-P-040011	form tools
400-P-040291	cavity AU/C1030
400-P-738121	threaded port body GAU-12-...
400-P-120112	solenoid coil 36X48/16.1
400-P-010101	MTTFd Values for Hydraulic Valves

info.ch@bucherhydraulics.com **www.bucherhydraulics.com**

© 2026 by Bucher Hydraulics AG Frutigen, 3714 Frutigen, Switzerland

All rights reserved.
Data is provided for the purpose of product description only, and must not be construed as warranted characteristics in the legal sense. The information does not relieve users from the duty of conducting their own evaluations and tests. Because the products are subject to continual improvement, we reserve the right to amend the product specifications contained in this catalogue.

BUCHER hydraulics

SOLENOID VALVE, 3–WAY, 2–POSITION DIRECT ACTING, SPOOL TYPE (3/2)

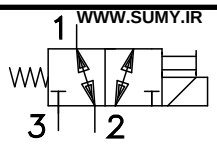

WWW.SUMY.IR

TORQUE:
Steel = 55/60 Ft–Lb. [74/81 Nm]
Aluminum = 35/40 Ft–Lb. [47/54 Nm]

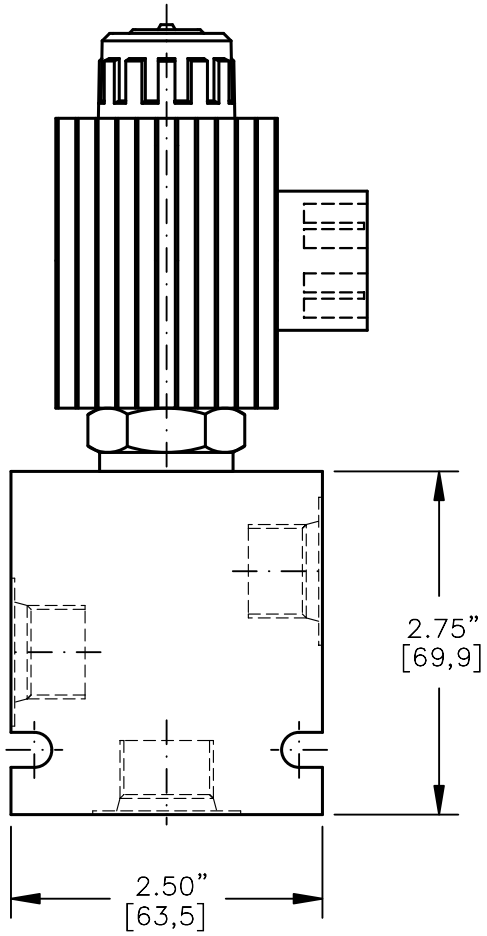

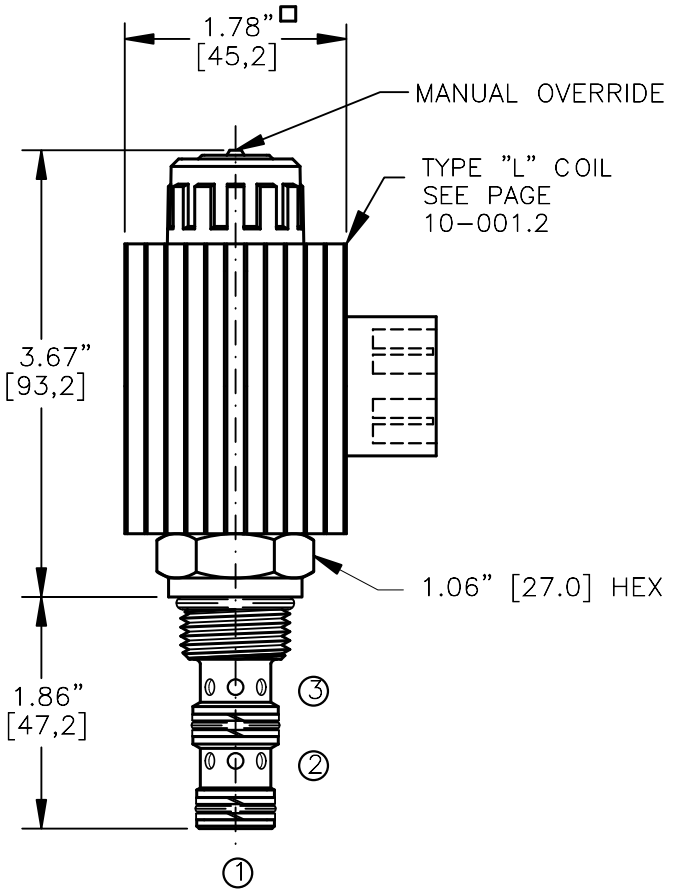

NOTES:
1. FOR ALUMINUM OR STEEL VALVE HOUSING CONFIGURATIONS SEE PAGE 0–032.1
2. SOLENOIDS AVAILABLE WITH DIODES – CONSULT FACTORY.
3. ALL A.C. COILS ARE INTERNALLY A.C. TO D.C. RECTIFIED.
4. FOR SOFT SHIFT SOLENOID VALVE SEE PAGE 10–002.0

EMDV–10–X–3B–X–XXX X

BASIC

SIZE
10 = 7/8"–14UNF

SEALS
N = BUNA "N"
V = VITON

TYPE
3B = "B" SPOOL
3–WAY, 2–POSITION

PORTS
0 = CARTRIDGE ONLY
02BX = G 1/4" BSPP
03BX = G 3/8" BSPP
06TX = SAE – #6
08TX = SAE – #8
"A" = ALUM. HOUSING
"S" = STEEL HOUSING

VOLTAGE AMPS
12D = 12 VDC 3.00
24D = 24 VDC 1.50
36D = 36 VDC 1.00
48D = 48 VDC 0.75
110D = 110 VDC 0.33
115A = 115 VAC 0.32
230A = 230 VAC 0.16

TERMINALS
L = 18GA. 24" LEADS
T = SPADE TERM.
B = BOLT TERM.
G = DIN43650
W = WEATHER–PACK
D = DEUTSCH–DT04–2P
M = METRI–PACK CONN.

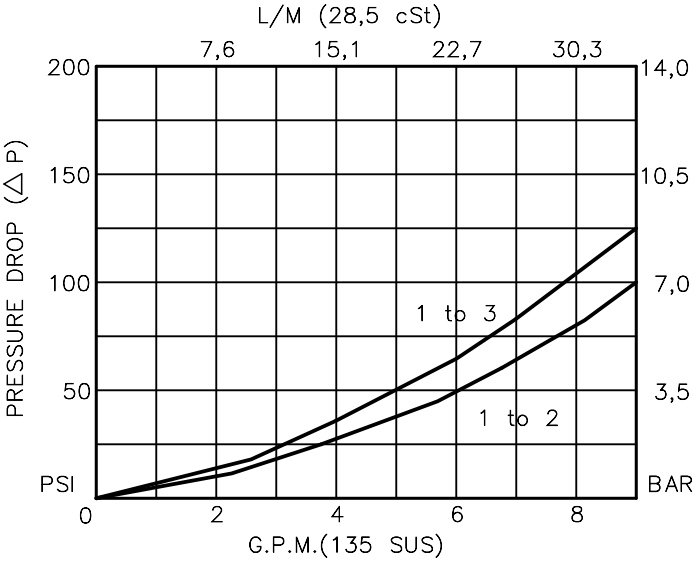

BUCHER hydraulics

WWW.SUMY.IR

SOLENOID VALVE 3–WAY, 2–POSITION, DIRECT ACTING, SPOOL TYPE (3/2)

DESCRIPTION

This unit is a THREE–WAY, TWO POSITION, cartridge type, spool type, direct acting, screw in type, solenoid operated, directional control valve.

OPERATIONS

When solenoid coil is de–energized, this valve allows flow between ports 1 and 2, port 3 is blocked.
When solenoid coil is energized, the spool in this valve is shifted and allows flow between ports 1 and 3 and port 2 is blocked. This valve shifts in a closed position.
Manual Operator Standard: Push in and hold a small plunger on top of the valve with a screw driver or a similar plunger smaller then .188" dia.

FEATURES AND BENEFITS

Continuous–duty, very low heat rise & waterproof solenoid coil.
Interchangeable solenoid coils & terminations options available.
Hardened precision fitted spool & sleeve provides reliable, long life.
Very efficient, wet–armature solenoid core tube constraction.
All external carbon steel parts are plated for longer life against the elements.
All cartridge valves are 100% functionally tested.
Industry common cavity.

BUCHER hydraulics

WWW.SUMY.IR

SOLENOID VALVE 3–WAY, 2–POSITION, DIRECT ACTING, SPOOL TYPE (3/2)

SPECIFICATIONS

OPERATING PRESSURE: 5,000 PSI [350 Bar]
PROOF PRESSURE: 10,000 PSI [700 Bar]
FLOW: 8.0 GPM [30 l/m] See performance chart.
INTERNAL LEAKAGE: 5 cu.in/min [82 cc/m] @ 5,000 PSI [350 Bar]
VALVE HOUSINGS: 2500 PSI [175 Bar] = Aluminum – Anodized.
5000 PSI [350 Bar] = Steel – Unplated.
OIL TEMPERATURE: –40° to +175° F. [–40° to +80° C.]
AMBIENT TEMPERATURE: –40° to +122° F. [–40° to +50° C.]
Please consult factory for continuously energized or high ambient temperature application (>122° F [50°C])
OPERATING MEDIA: All general purpose hydraulic fluids such as MIL–H–5606, SAE–#10, SAE–#20, etc.
RESPONSE TIME: First indication of change in pressure with 100% voltage supplied @ 80% of nominal flow rating.
* Pull–in: 50 ms
* Drop–Out: 50 ms
SEAL KIT: SKN–1032 Buna "N"
SKV–1032 Viton
INSTALLATION: No restrictions.
WEIGHT: 1.95 lb [.88 kg] cartridge with coil only.
VALVE CAVITY: #C1030, See Page 0–032.0.

info.el@bucherhydraulics.com

www.bucherhydraulics.com/commoncavity

© 2015 by Bucher Hydraulics, Inc., 2545 Northwest Parkway, Elgin, Illinois 60124, USA
All rights reserved.
The technical information in this catalog, may contain calculated figures (for reference only) and not actual performance data for this product. Data is provided for the purpose of product description only, and must not be construed as warranted characteristics in the legal sense. The information does not relieve users from the duty of conducting their own evaluations and tests. Because the products are subject to continual improvement, we reserve the right to amend the product specifications contained in this catalogue.

3 Ways/2 Pos. Cartridge Spool Valve, SAE 12 / NG 10

Q_{max} = 16.0 gpm [60 l/min], p_{max} = 5000 psi [350 bar]
direct acting, with solenoid operation
Series ESDV-12-3…

- Compact construction for cavity type C1230
- A low power consumption
- Continuous-duty cycle
- Low heat rise
- Hardened precision fitted spool & sleeve provides consistent high performance and long life
- High performance solenoid valve
- All exposed parts with zinc plating
- High pressure wet-armature solenoids
- Interchangeable IP rated solenoid coils & terminations options available
- The slip-on coil can be rotated, and it can be replaced without opening the hydraulic envelope
- Various plug-connector systems and voltages are available
- Can be fitted in a line-mounting body
- Replaces EMDV-12-3…

1 Description

These direct acting 3 way / 2 pos solenoid operated spool valves, series ESDV-12-3… are size SAE 12 / NG 10, pressure balanced screw-in cartridges with a 1-1/16-12 UN mounting thread. When the solenoid coil is de-energized, this valve allows flow between port 2 and 1 with port 3 blocked. When solenoid coil is energized, the spool is shifts and blocks port 1 (spool A and C) respectively 2 (spool B and D) and permits flow between the other 2 ports. Valves with spool type A or B are shifting in closed transition. Valves with spool C or D are shifting in open transition. Maximum inlet capacity of flow and pressure are allowed at port 3 or port 2. Port 1 is designed to be connected to tank and therefore maximum inlet pressure is limited to 3200 psi at port 1. Manual override operation: Press and hold on the small plunger which is located on top of the valve with a similar object smaller than 0.180" diameter. All external parts of this cartridge valve are zinc plated and are thus suitable for use in harsh operating environments. The slip-on coils can be replaced without opening the hydraulic envelope and can be positioned at any angle through 360°. If you intend to manufacture your own cavities or are designing a line-mounting installation, please refer to the section “Related data sheets”.

2 Symbol (ISO 1219)

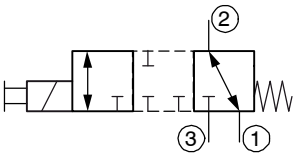

ESDV-12-3A…

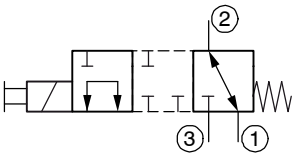

ESDV-12-3B…

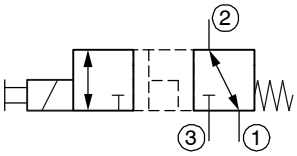

ESDV-12-3C…

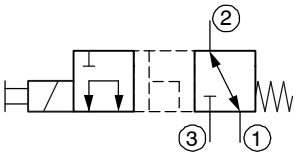

ESDV-12-3D…

3 Technical data

General characteristics	Description, value, unit
Designation	3 ways / 2 positions cartridge spool valve
Design	direct acting, with solenoid operation
Mounting method	screw-in cartridge 1-1/16-12 UN-2A

General characteristics	Description, value, unit	
Size	SAE 12 / NG 10 for cavity type C1230	
Weight	3.5 lbs	[1.6 kg]
Mounting attitude	unrestricted (preferably vertical, coil down)	

Hydraulic characteristics		Description, value, unit	
Maximum operating pressure	- ports 3, 2 - port 1	5000 psi 3200 psi	[350 bar] [220 bar]
Maximum flow rate	- ports 3, 2 - port 1	16 gpm 11 gpm	[60 l/min] [41 l/min]
Internal leakage		25 cu.in/min by 3200 psi 35 cu.in/min by 5000 psi	[410 ml/min by 220 bar] [574 ml/min by 350 bar]
Hydraulic fluid		HL and HLP mineral oil to DIN 51 524; for other fluids, please contact BUCHER	
Hydraulic fluid temperature range	NBR: Viton:	-13 °F … +180 °F + 5 °F … +250 °F	[-25 °C … +80 °C] [-15 °C … +120 °C]
Viscosity range		10…500 mm^2/s (cSt), recommended 15...250 mm^2/s (cSt)	
Minimum fluid cleanliness Cleanliness class to ISO 4406 : 1999		class 20/18/15	

Electrical characteristics	Description, value, unit	
Supply voltage	12 V DC, 24 V DC, 103 V DC, 206 V DC note: • for AC applications an external rectifier circuit is required • the effective voltage in AC (with external rectifier circuit) is 11% higher than the rated DC voltage: 103 VDC → 115 V AC (respectively 206 V DC → 230 V AC) • above 48 V a ground connection to the metal housing of the coil is required	
Supply voltage tolerance	± 10 %	
Ambient temperature range	-22 °F … +140 °F	[-3 °C … +60 °C]
Power consumption at max. control current 12 V DC, 24 V DC 103 V DC [2], 206 V DC [2]	Nominal power consumption: 27 W 31 VA [3]	
Switching time	45 … 100 ms (solenoid ON) 20 … 100 ms (solenoid OFF) These times are strongly influenced by fluid pressure, flow rate and viscosity, as well as by the dwell time under pressure.	
Relative duty cycle	100 %	
Protection class to ISO 20 653 / EN 60 529	IP 65 / IP 67 / IP 69K, see “Ordering code” (with appropriate mating connector and proper fitting and sealing)	
Electrical connection	2-pin square plug to ISO 4400 / DIN 43 650 (standard) [3] for other connectors, see “Ordering code”	

Note:
[2] for AC applications an external rectifier circuit is required. ATTENTION: The effective voltage in AC (with external rectifier circuit) is 11% higher than the rated DC voltage.
[3] above 48 V a ground connection to the metal housing of the coil is required

4 Performance graphs

measured with oil viscosity 33 mm^2/s (cSt)

p = f (I) Pressure adjustment characteristic – ESDV-12-3A

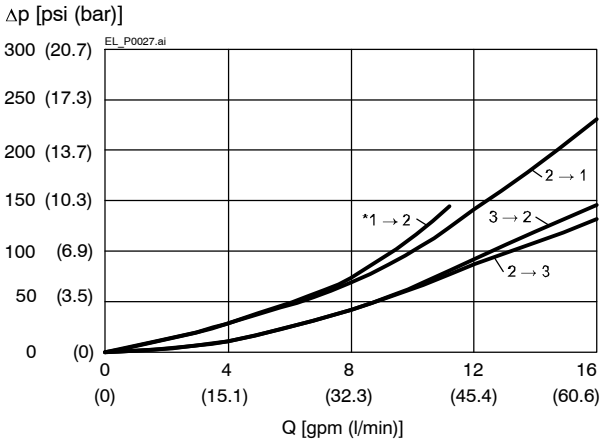

p = f (I) Pressure adjustment characteristic – ESDV-12-3B

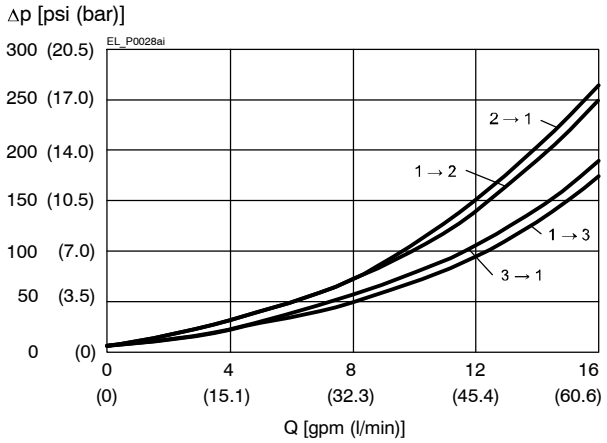

p = f (I) Pressure adjustment characteristic – ESDV-12-3C

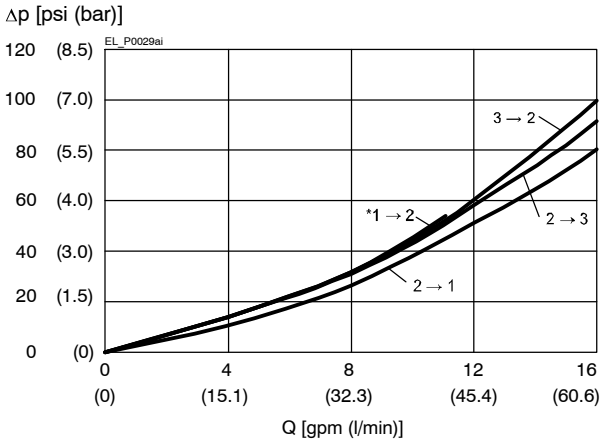

p = f (I) Pressure adjustment characteristic – ESDV-12-3D

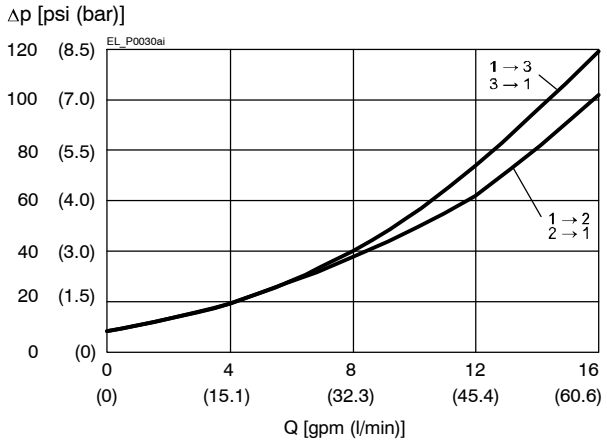

IMPORTANT!

* port 1 inlet flow limited to 11 gpm (41.6 l/min)

5 Dimensions & sectional view

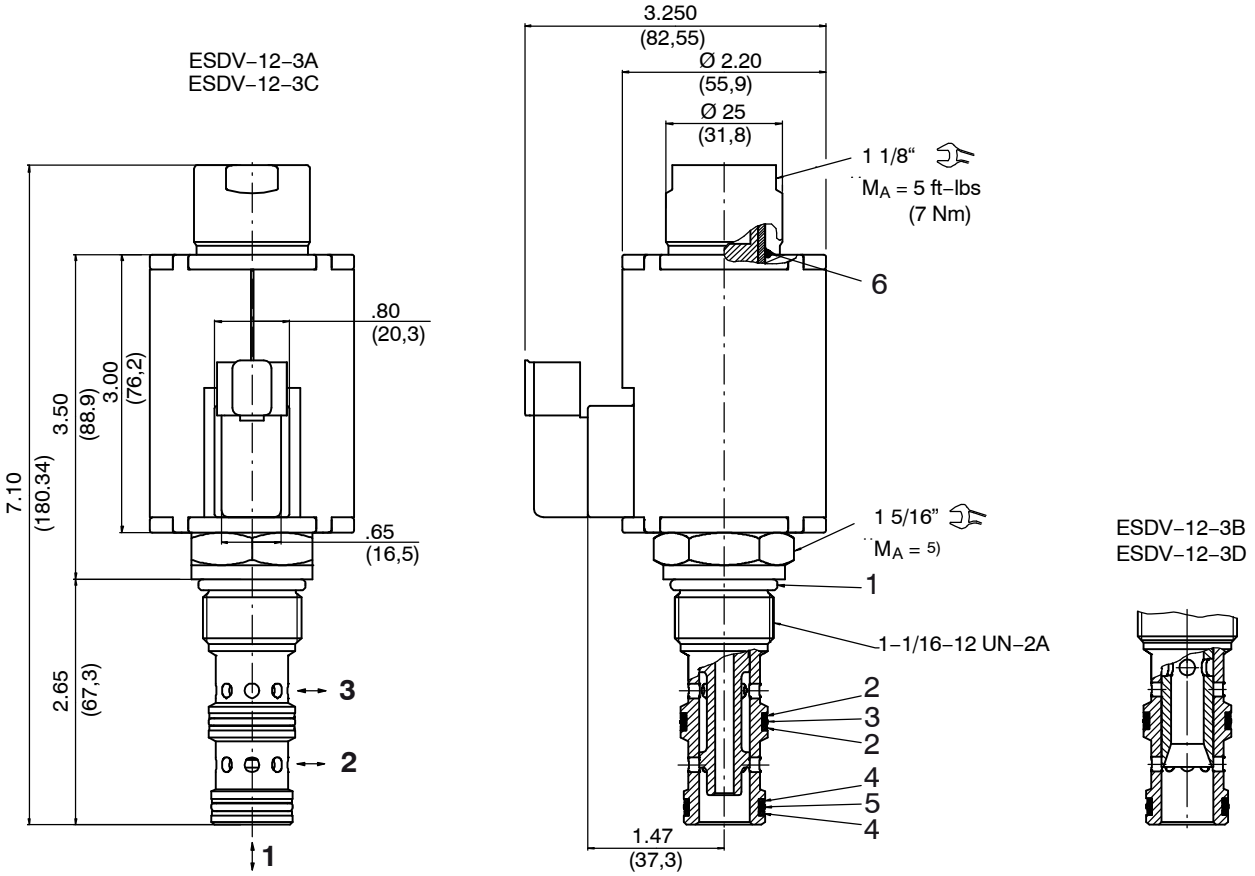

Tightening torque M_A 5)

Cavity type	C1230
When fitted in aluminium	55…60 ft-lbs (74 - 81 [Nm])
When fitted in steel	70…75 ft-lbs (95 - 101 [Nm])

6 Installation information

IMPORTANT!
When fitting the cartridges, use the specified tightening torque. No adjustments are necessary, since the cartridges are set in the factory.

ATTENTION!
Only qualified personnel with mechanical skills may carry out any maintenance work. Generally, the only work that should ever be undertaken is to check, and possibly replace, the seals. When changing seals, oil or grease the new seals thoroughly before fitting them.

Seal kit NBR no. SKN-1232-S1 4)

Item	Qty.	Description	
1	1	O-ring no. 912 ∅ 0.924 x 0.116 B-90	Inch
2	2	Backup ring 0.830 x 0.053 x 0.048 FI0751	Inch
3	1	O-ring no. 019 ∅ 0.801 x 0.070 B-70	Inch
4	2	Backup ring 0.768 x 0.053 x 0.048 FI0751	Inch
5	1	O-ring no. 018 ∅ 0.739 x 0.070 B-70	Inch
6	1	O-ring no. 020 ∅ 0,864 x 0,070 V70	Inch

IMPORTANT!
4) Seal kit with FKM (Viton) seals, no. SKV-1232-S1

7 Ordering code

Ex. ESDV - 12 - X - 3A - X - 24 D _

ESDV	=	directional valve, spool-type, direct acting
12	=	size SAE 12 / NG 10
N	=	NBR (Nitrile) seals (**standard**)
V	=	FKM (Viton) seals (special seals - please contact BUCHER)
3A	=	A Spool 3-way/2-position (closed transition)
3B	=	B Spool 3-way/2-position (closed transition)
3C	=	C Spool 3-way/2-position (open transition)
3D	=	D Spool 3-way/2-position (open transition)
0	=	cartridge only
04BA	=	line-mounting body G ½“ -14 BSPP aluminum
04BS	=	line-mounting body G ½“ -14 BSPP steel
06BA	=	line-mounting body G ¾“ -14 BSPP aluminum
06BS	=	line-mounting body G ¾“ -14 BSPP steel
10TA	=	line-mounting body SAE-10 aluminum
10TS	=	line-mounting body SAE-10 steel
12TA	=	line-mounting body SAE-12 aluminum
12TS	=	line-mounting body SAE-12 steel
...	=	voltage e.g. **24** (24 V)
D	=	current DC
		mating plug not supplied:
T	=	Deutsch axial plug connection DT04-2P (IP 67/69K) [1)]
TR	=	Deutsch axial plug connection DT04-2P (with protection diode, IP 67/69K) on request [1)]
S	=	1/4" Spade Terminals connection
F	=	flying leads (18 inch, [450 mm])
H	=	ISO 4400 / DIN 43 650 connection (IP 65)

Note:
[1)] only up to 48 V

8 Related data sheets

Reference	(Old no.)	Description
520-P-000050		Form tools
520-P-000330	(0-033.0)	Cavity type C1230
520-P-001020		Coils D 2.2/.875 for screw-in cartridge valves
520-P-000331	(0-033.1)	Line-mounting body, 12 series – 3 way

info.el@bucherhydraulics.com www.bucherhydraulics.com/commoncavity

© 2020 by Bucher Hydraulics, Inc., 2545 Northwest Parkway, Elgin, Illinois 60124, USA
All rights reserved.
Data is provided for the purpose of product description only, and must not be construed as warranted characteristics in the legal sense. The information does not relieve users from the duty of conducting their own evaluations and tests. Because the products are subject to continual improvement, we reserve the right to amend the product specifications contained in this catalogue.

Classification: 430.300.330.305.315.380

BUCHER hydraulics

SOLENOID VALVE, 4–WAY, 2–POSITION. DIRECT ACTING, SPOOL TYPE (4/2)

WWW.SUMY.IR

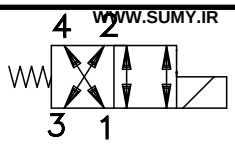

TORQUE:
Steel = 35/40 Ft–Lb. [47/54 Nm]
Aluminum = 25/30 Ft–Lb. [34/41 Nm]

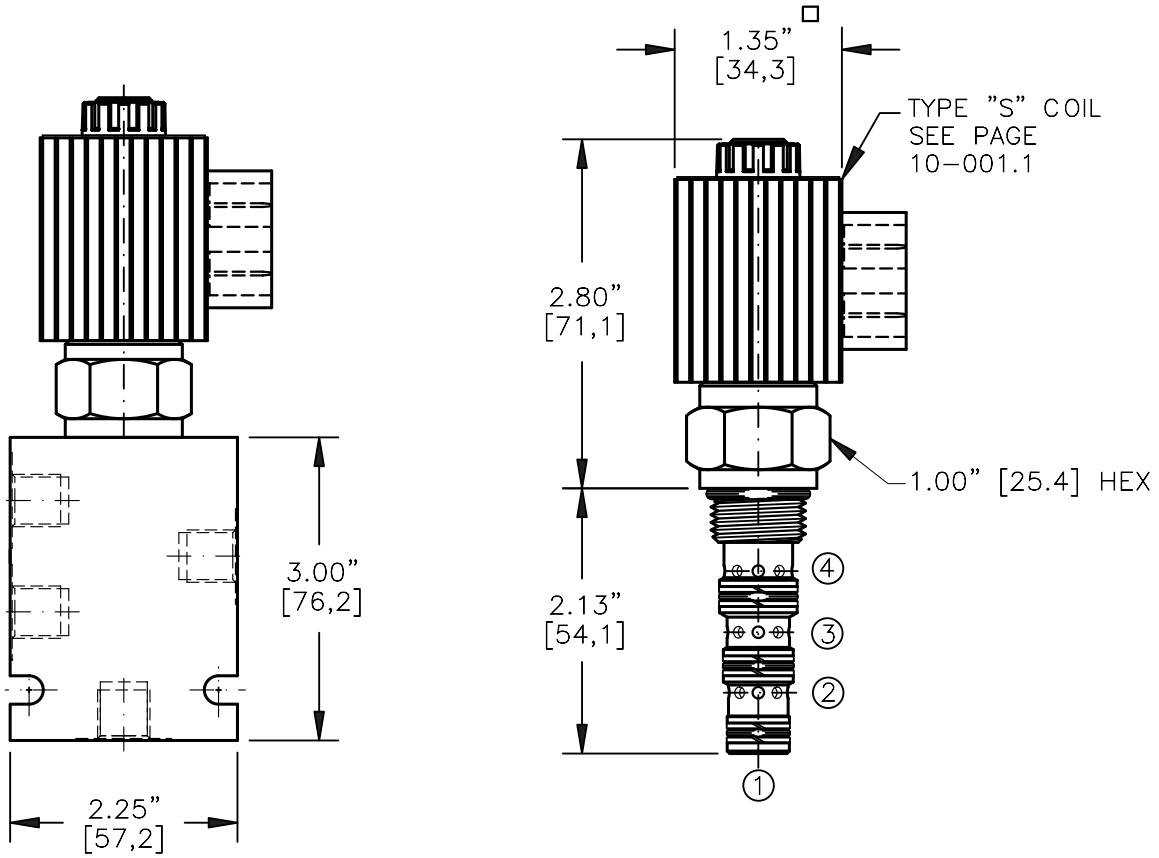

NOTES:
1. FOR ALUMINUM OR STEEL VALVE HOUSING CONFIGURATIONS SEE PAGE 0–041.1
2. SOLENOIDS AVAILABLE WITH DIODES – CONSULT FACTORY.
3. FOR "AC" COILS USE RECTIFIED DIN CONNECTOR 20828.

EMDV–08–X–4J–X–XXX X

BASIC

SIZE
08 = 3/4"–16UNF

SEALS
N = BUNA "N" = VITON
V

TYPE
4J= "J" SPOOL
4–WAY, 2–POSITION

PORTS
0 = CARTRIDGE ONLY
02BX = G 1/4" BSSP
06TX = SAE – #6
"A" = ALUM. HOUSING
"S" = STEEL HOUSING

VOLTAGE AMPS
12D = 12 VDC 1.7
24D = 24 VDC .9
36D = 36 VDC .6
48D = 48 VDC .5
115D = 115 VDC .2

TERMINALS
L =18GA. 24" LEADS
T =SPADE TERM.
B =BOLT TERM.
G =DIN43650
W =WEATHER–PACK
D =DEUTSCH–DT04–2P
M =METRI–PACK CONN.

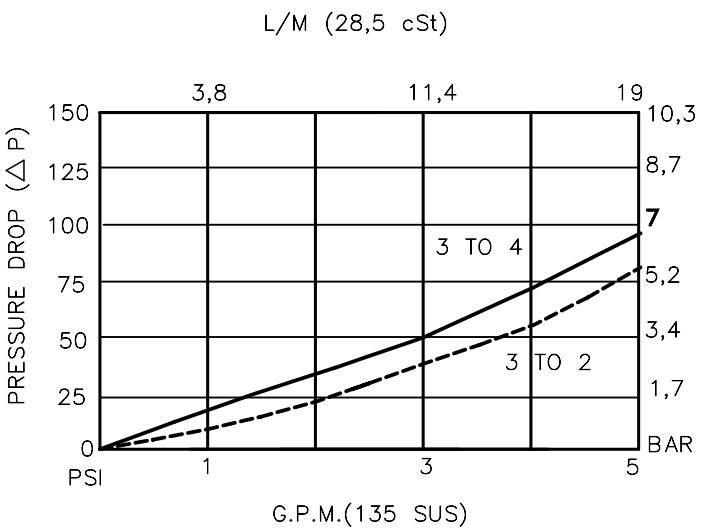

BUCHER hydraulics

WWW.SUMY.IR

SOLENOID VALVE 4–WAY, 2–POSITION, DIRECT ACTING, SPOOL TYPE (4/2)

DESCRIPTION

This unit is a FOUR–WAY, TWO POSITION, cartridge type, spool type, direct acting, screw in type, solenoid operated, directional control valve.

OPERATIONS

When solenoid coil is de–energized, this valve allows flow from port 3 to 2 and port 4 to 1 or vice versa.
When solenoid coil is energized, the spool in this valve is shifted and allows flow from port 3 to 4 and port 2 to 1 or vice versa.
"This valve shifts in a close center position".

FEATURES AND BENEFITS

Continuous–duty, very low heat rise & waterproof solenoid coil.
Interchangeable solenoid coils & terminations options available.
Hardened precision fitted spool & sleeve provides reliable, long life.
Very efficient, wet–armature solenoid core tube construction.
All external carbon steel parts are plated for longer life against the elements.
All cartridge valves are 100% functionally tested.
Industry common cavity.

BUCHER hydraulics

WWW.SUMY.IR

SOLENOID VALVE 4–WAY, 2–POSITION, DIRECT ACTING, SPOOL TYPE (4/2)

SPECIFICATIONS

OPERATING PRESSURE: 5,000 PSI [350 Bar]
PROOF PRESSURE: 10,000 PSI [700 Bar]
FLOW: 5.0 GPM [19 l/m] See performance chart.
INTERNAL LEAKAGE: 5cu.in/min [82 cc/m] @ 5,000 PSI (350 Bar)
VALVE HOUSINGS: 2500 PSI [175 Bar] = Aluminum – Anodized.
5000 PSI [350 Bar] = Steel – Unplated.
OIL TEMPERATURE: –40° to +175° F. [–40° to +80° C.]
AMBIENT TEMPERATURE: –40° to +122° F. [–40° to +50° C.]
Please consult factory for continuously energized or high ambient temperature application (>122° F [50°C])
OPERATING MEDIA: All general purpose hydraulic fluids such as MIL–H–5606, SAE–#10, SAE–#20, etc.
RESPONSE TIME: First indication of change in pressure with 100% voltage supplied @ 80% of nominal flow rating.
* Pull–in: 50 ms
* Drop–Out: 50 ms
SEAL KIT: SKN–0842 BUNA "N"
SKV–0842 Viton
WEIGHT: .98 lb [.44 kg] cartridge with coil only.
VALVE CAVITY: #C0840, See Page 0–041.0.

info.el@bucherhydraulics.com

www.bucherhydraulics.com/commoncavity

© 2015 by Bucher Hydraulics, Inc., 2545 Northwest Parkway, Elgin, Illinois 60124, USA
All rights reserved.
The technical information in this catalog, may contain calculated figures (for reference only) and not actual performance data for this product. Data is provided for the purpose of product description only, and must not be construed as warranted characteristics in the legal sense. The information does not relieve users from the duty of conducting their own evaluations and tests. Because the products are subject to continual improvement, we reserve the right to amend the product specifications contained in this catalogue.

BUCHER hydraulics
WWW.SUMY.IR

Directional valve 4-way/2-position

Q_{max} = 60 l/min, p_{max} = 350 bar
direct acting, spool type, switching solenoid with emergency override
Type series: ESDV-12-4A...

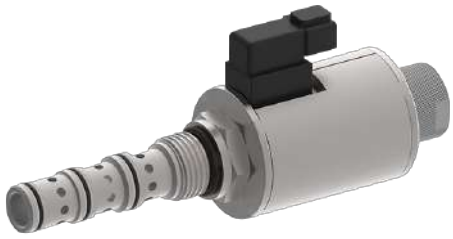

- Screw-in cartridge valve
- For cavity C1240
- All external parts zinc plated, chromited (CrVI-free)
- Installation in threaded port body type B1240
- Hardened, precision fitted spool & cage provides a reliable and long life
- High pressure wet-armature solenoids
- The slip-on coil can be rotated, and it can be replaced without opening the hydraulic envelope
- Various plug-connector systems and voltages are available

Description

The 4-way/2-position solenoid operated directional seat valves, series ESDV-12-4A... are size NG 10 / SAE 12, direct acting, pressure balanced, screw-in-valves with a 1 1/16-12 UN mounting thread. When the solenoid coil is de-energized, the main spool is held in neutral position by the return spring. Actuation of the spool happens by a wet-armature solenoid system. Port 3 is designed to be the pressure inlet port. This pressure inlet port 3 and as well as the consumer ports 4 and 2 are 5000 psi (350 bar) endurance proof and flow can be directed in both directions (see symbols). Port 1 is designed to be connected to tank and the maximum pressure is limited to 3200 psi at port 1. In neutral position, there is a connection between port 3 to 4 as well as 2 to 1. Once the solenoid coil is activated, port 3 is connected to 2 and port 4 to 1. The transition position has a positive overlap and is therefore closed. While the spool is moving from neutral position to actuated position there is no connection between ports 1, 2, 3 and 4 and therefore only minimal spool leakage appears. Manual override operation: Press and hold on the small plunger which is located on top of the valve with a similar object smaller than 0.180" diameter. All external parts of the screw-in valves are zinc plated and are thus suitable for use in the harshest operating environments. The slip-on coils can be replaced without opening the hydraulic envelope and can be positioned at any angle through 360°. For self-assembly, please refer to the section related data sheets.

Symbol

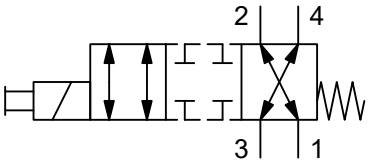

Technical data

General characteristics	Description, value, unit
Sales category	project specific (on request)
Function group	Directional valve
Function	4-way/2-position
Design	Screw-in cartridge valve
Controls	switching solenoid with emergency override
Characteristic	direct acting, spool type
Transition/central position of spool/piston	zero or overlap/positive (closed)
Construction size	NG 10 / SAE 12
Thread size	1 1/16-12 UN-2A
Mounting attitude	unrestricted (preferably vertical, coil down)
Weight	1.6 kg
Cavity acc. factory standard	For cavity C1240
Tightening torque steel	98 Nm
Tightening torque aluminium	78 Nm
Tightening torque tolerance	± 10 %
Minimum ambient temperature	- 30 °C
Maximum ambient temperature	+ 80 °C
Surface protection	All external parts zinc plated, chromited (CrVI-free)
Sealing material	see ordering code
Seal kit order number	NBR: SKN-1242-S1 / SKV-1242-S1

Hydraulic characteristics	Description, value, unit
Maximum operating pressure	350 bar
Restriction of the operating pressure	220 bar
Maximum flow rate	60 l/min
Flow direction	see symbol
Hydraulic fluid	HL and HLP mineral oil according to DIN 51 524; other fluids on request!
Minimum fluid temperature	- 30 °C
Maximum fluid temperature	+ 80 °C
Viscosity range	10 ... 500 mm^2/s (cSt)
Recommended viscosity range	15 ... 250 mm^2/s (cSt)
Minimum fluid cleanliness (cleanlineless class according to ISO 4406:1999)	class 20/18/15
Internal leakage flow rate	410 ml/min by 220 bar, 574 ml/min by 350 bar

Electric characteristics	Description, value, unit
Actuator type	solenoid coil
Solenoid coils type	D2.2 /.875
Supply voltage DC	12/24 V DC
Supply voltage tolerance	± 10 %
Nominal power consumption	27 W
Switching time	45...100 ms (solenoid ON) 20...100 ms (solenoid OFF)

WWW.SUMY.IR

Electric characteristics	Description, value, unit
Relative duty cycle	100 %
Electrical connection coil	several connection types available, see ordering code
Protection class solenoid coil to ISO 20 653 / EN 60 529	IP 65 / IP 67 / IP 69K, see “Ordering code” (with appropriate mating connector and proper fitting and sealing)

NOTE!
The switching time can be strongly dependent on flow rate, pressure, oil viscosity and the dwell time under pressure. In practice, the switching time may therefore deviate from the specified value range.

NOTE!
For AC applications an external rectifier circuit is required. The effective voltage in AC (with external rectifier circuit) is 11% higher than the rated DC voltage.

NOTE!
Above 48 V a ground connection to the metal housing of the coil is required.

Performance graphs

measured with oil viscosity 33.0 mm²/s (cSt)

p = f (Q) Performance limit

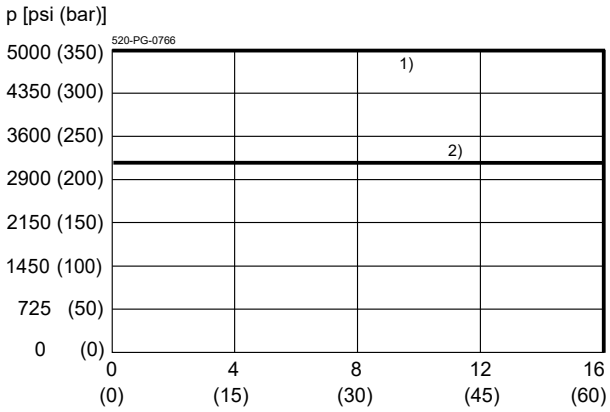

Δp = f (Q) Pressure drop-flow rate characteristic

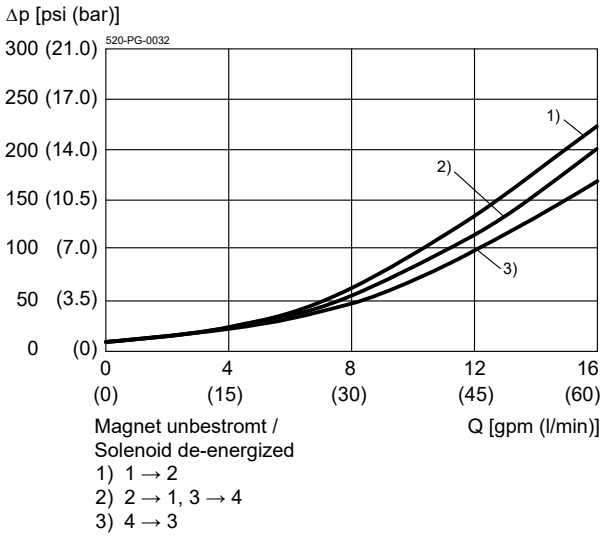

Δp = f (Q) Pressure drop-flow rate characteristic

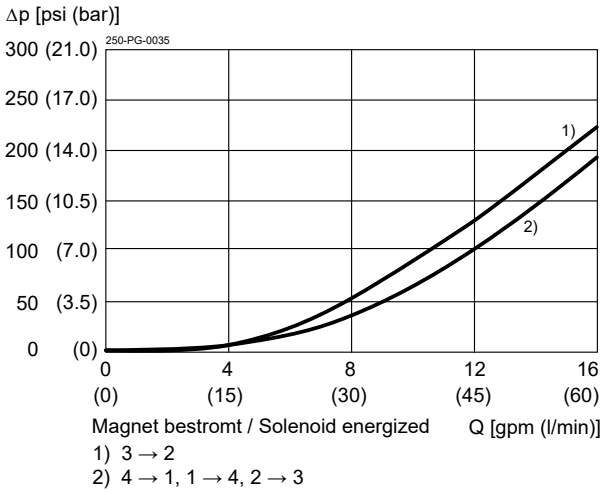

Dimensions and sectional view

Beispiel für die Masseinheit:
Example for the dimensional units:

.031	= 0.031"	inch
(0.79)	= 0.79 mm	millimeter

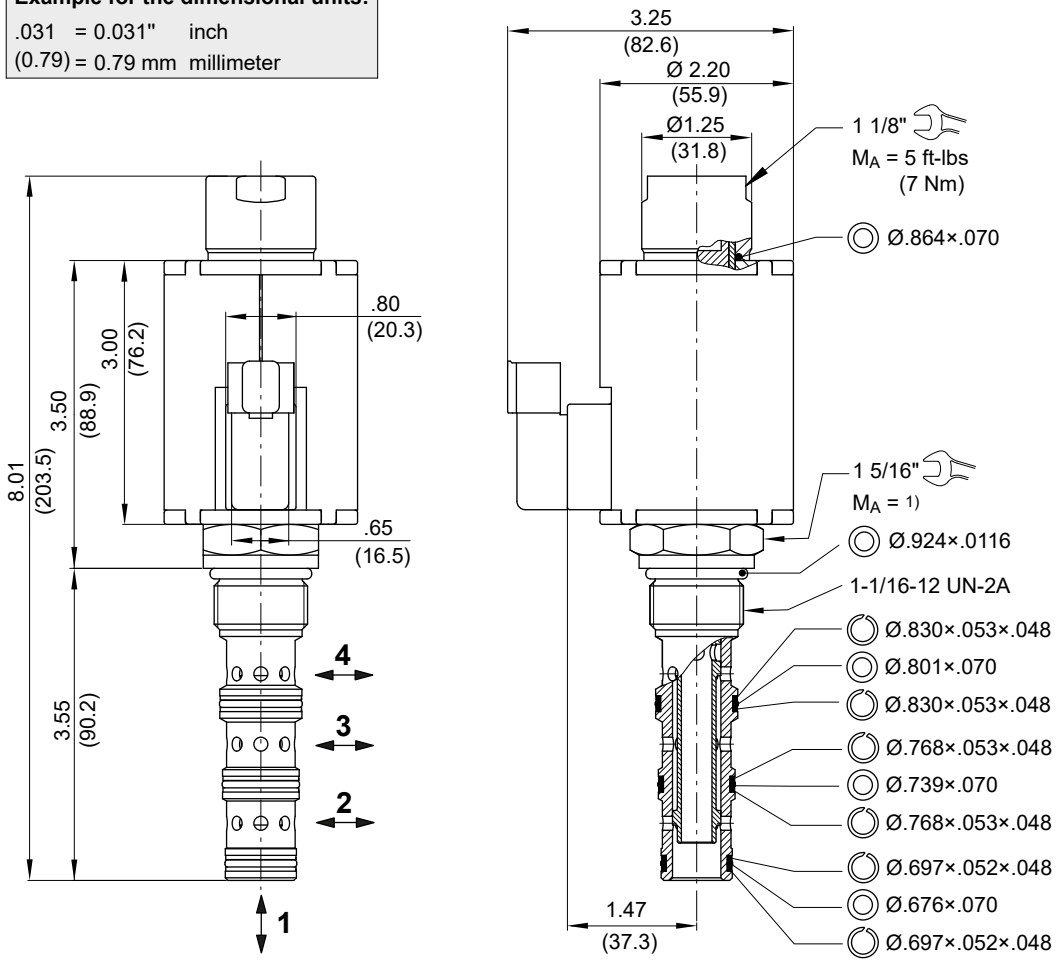

Installation information

IMPORTANT!
1) When fitting the screw-in cartridge valve, use the specified tightening torque. The value can be found in the chapter "Technical data".

ATTENTION!
Only qualified personnel with mechanical skills may carry out any maintenance work. Generally, the only work that should ever be undertaken is to check, and possibly replace, the seals. When changing seals, oil or grease the new seals thoroughly before fitting them.

NOTE!
The seals are not available individually. The seal kit order number can be found in the chapter "Technical data".

Ordering code

Ex. ESDV - 12 - N - 4A - 0 - 24 D _

ESDV = directional valve, spool-type, direct acting
12 = SAE 12 / nominal size 10
N = NBR (nitril-butadien-rubber / BUNA) seals **(standard)**
V = FKM (fluorocarbon rubber / VITON) seals
(special seals on request)
4A = spooltype A, 4-way/2-position (closed transition)
0 = cartridge only **(standard)**
04BA = line-mounting body G ½"-14 BSPP aluminium
04BS = line-mounting body G ½"-14 BSPP steel
06BA = line-mounting body G ¾"-14 BSPP aluminium
06BS = line-mounting body G ¾"-14 BSPP steel
(on request)
10TA = line-mounting body SAE 10 aluminium
10TS = line-mounting body SAE 10 steel
12TA = line-mounting body SAE 12 aluminium
12TS = line-mounting body SAE 12 steel
… = voltage e.g. 24 (24 V)
D = current DC
mating plug not supplied:
T = Deutsch axial plug connection DT04-2P (IP 67/69K)
TR = Deutsch axial plug connection DT04-2P (with protection diode, IP 67/69K) on request
F = flying leads (18 inch [450 mm])
H = ISO 4400 / DIN 43 650 connection (IP 65)

Related data sheets

Reference	Description
520-P-000050	Form tools
520-P-001020	Solenoid coil D2.2/.875
520-P-000430	Cavity C1240
520-P-000431	Threaded port body B1240

info.us@bucherhydraulics.com **www.bucherhydraulics.com**

© 2025 by Bucher Hydraulics Inc., Elgin, IL 60124, USA

All rights reserved.
Data is provided for the purpose of product description only, and must not be construed as warranted characteristics in the legal sense. The information does not relieve users from the duty of conducting their own evaluations and tests. Because the products are subject to continual improvement, we reserve the right to amend the product specifications contained in this catalogue.

BUCHER hydraulics
WWW.SUMY.IR

Directional valve 4-way/2-position

Q_{max} = 60 l/min, p_{max} = 350 bar
direct acting, spool type, switching solenoid with emergency override
Type series: ESDV-12-4B...

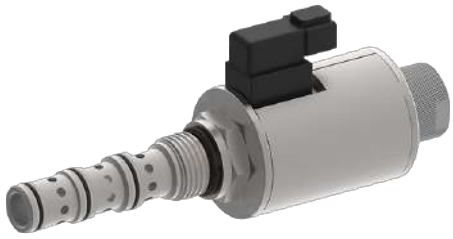

- Screw-in cartridge valve
- For cavity C1240
- All external parts zinc plated, chromited (CrVI-free)
- Installation in threaded port body type B1240
- Hardened, precision fitted spool & cage provides a reliable and long life
- High pressure wet-armature solenoids
- The slip-on coil can be rotated, and it can be replaced without opening the hydraulic envelope
- Various plug-connector systems and voltages are available

Description

The 4-way/2-position solenoid operated directional seat valves, series ESDV-12-4B... are size NG 10 / SAE 12, direct acting, pressure balanced, screw-in-valves with a 1 1/16-12 UN mounting thread. When the solenoid coil is de-energized, the main spool is held in neutral position by the return spring. Actuation of the spool happens by a wet-armature solenoid system. Port 3 is designed to be the pressure inlet port. This pressure inlet port 3 and as well as the consumer ports 4 and 2 are 5000 psi (350 bar) endurance proof and flow can be directed in both directions (see symbols). Port 1 is designed to be connected to tank and the maximum pressure is limited to 3200 psi at port 1. This spool type has a closed starting position. Once the solenoid coil is activated, port 3 is connected to 2 and port 4 to 1. The transition position has a positive overlap and is therefore closed. While the spool is moving from neutral position to actuated position there is no connection between ports 1, 2, 3 and 4 and therefore only minimal spool leakage appears. Manual override operation: Press and hold on the small plunger which is located on top of the valve with a similar object smaller than 0.180" diameter. All external parts of the screw-in valves are zinc plated and are thus suitable for use in the harshest operating environments. The slip-on coils can be replaced without opening the hydraulic envelope and can be positioned at any angle through 360°. For self-assembly, please refer to the section related data sheets.

Symbol

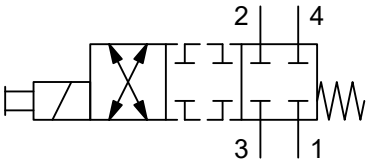

Technical data

General characteristics	Description, value, unit
Function group	Directional valve
Function	4-way/2-position
Design	Screw-in cartridge valve
Controls	switching solenoid with emergency override
Characteristic	direct acting, spool type
Transition/central position of spool/piston	zero or overlap/positive (closed)
Construction size	NG 10 / SAE 12
Thread size	1 1/16-12 UN-2A
Mounting attitude	unrestricted (preferably vertical, coil down)
Weight	1.6 kg
Cavity acc. factory standard	For cavity C1240
Tightening torque steel	98 Nm
Tightening torque aluminium	78 Nm
Tightening torque tolerance	± 10 %
Minimum ambient temperature	- 30 °C
Maximum ambient temperature	+ 80 °C
Surface protection	All external parts zinc plated, chromited (CrVI-free)
Sealing material	see ordering code
Seal kit order number	NBR: SKN-1242-S1 / SKV-1242-S1

Hydraulic characteristics	Description, value, unit
Maximum operating pressure	350 bar
Restriction of the operating pressure	220 bar
Maximum flow rate	60 l/min
Flow direction	see symbol
Hydraulic fluid	HL and HLP mineral oil according to DIN 51 524; other fluids on request!
Minimum fluid temperature	- 30 °C
Maximum fluid temperature	+ 80 °C
Viscosity range	10 ... 500 mm^2/s (cSt)
Recommended viscosity range	15 ... 250 mm^2/s (cSt)
Minimum fluid cleanliness (cleanlineless class according to ISO 4406:1999)	class 20/18/15
Internal leakage flow rate	410 ml/min by 220 bar, 574 ml/min by 350 bar

Electric characteristics	Description, value, unit
Actuator type	solenoid coil
Solenoid coils type	D2.2 /.875
Supply voltage DC	12/24 V DC
Supply voltage tolerance	± 10 %
Nominal power consumption	27 W
Switching time	45...100 ms (solenoid ON) 20...100 ms (solenoid OFF)
Relative duty cycle	100 %

WWW.SUMY.IR

Electric characteristics	Description, value, unit
Electrical connection coil	several connection types available, see ordering code
Protection class solenoid coil to ISO 20 653 / EN 60 529	IP 65 / IP 67 / IP 69K, see “Ordering code” (with appropriate mating connector and proper fitting and sealing)

NOTE!
The switching time can be strongly dependent on flow rate, pressure, oil viscosity and the dwell time under pressure. In practice, the switching time may therefore deviate from the specified value range.

NOTE!
For AC applications an external rectifier circuit is required. The effective voltage in AC (with external rectifier circuit) is 11% higher than the rated DC voltage.

NOTE!
Above 48 V a ground connection to the metal housing of the coil is required.

Performance graphs

measured with oil viscosity 33.0 mm²/s (cSt)

p = f (Q) Performance limit

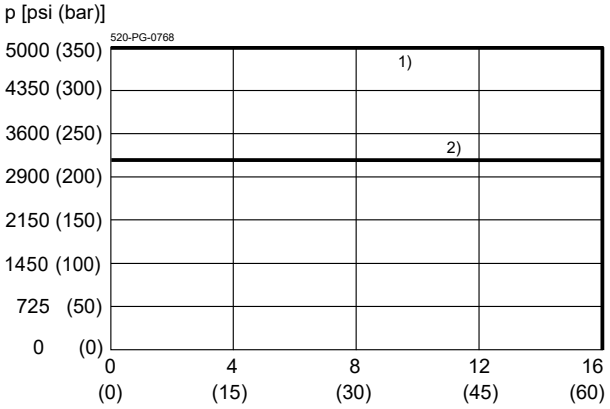

1) Anschluss 4, 3 und 2 / Port 4, 3 and 2 Q [gpm (l/min)]
2) Anschluss 1 / Port 1

Δp = f (Q) Pressure drop-flow rate characteristic

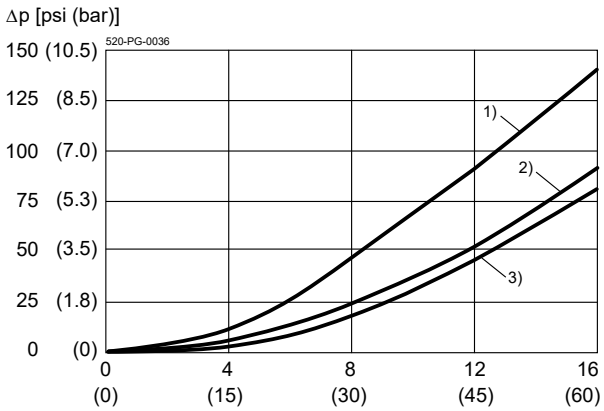

Magnet bestromt / Solenoid energized Q [gpm (l/min)]
1) 1 → 2, 2 → 1
2) 3 → 4
3) 4 → 3

Dimensions and sectional view

Beispiel für die Masseinheit:
Example for the dimensional units:

.031	= 0.031"	inch
(0.79)	= 0.79 mm	millimeter

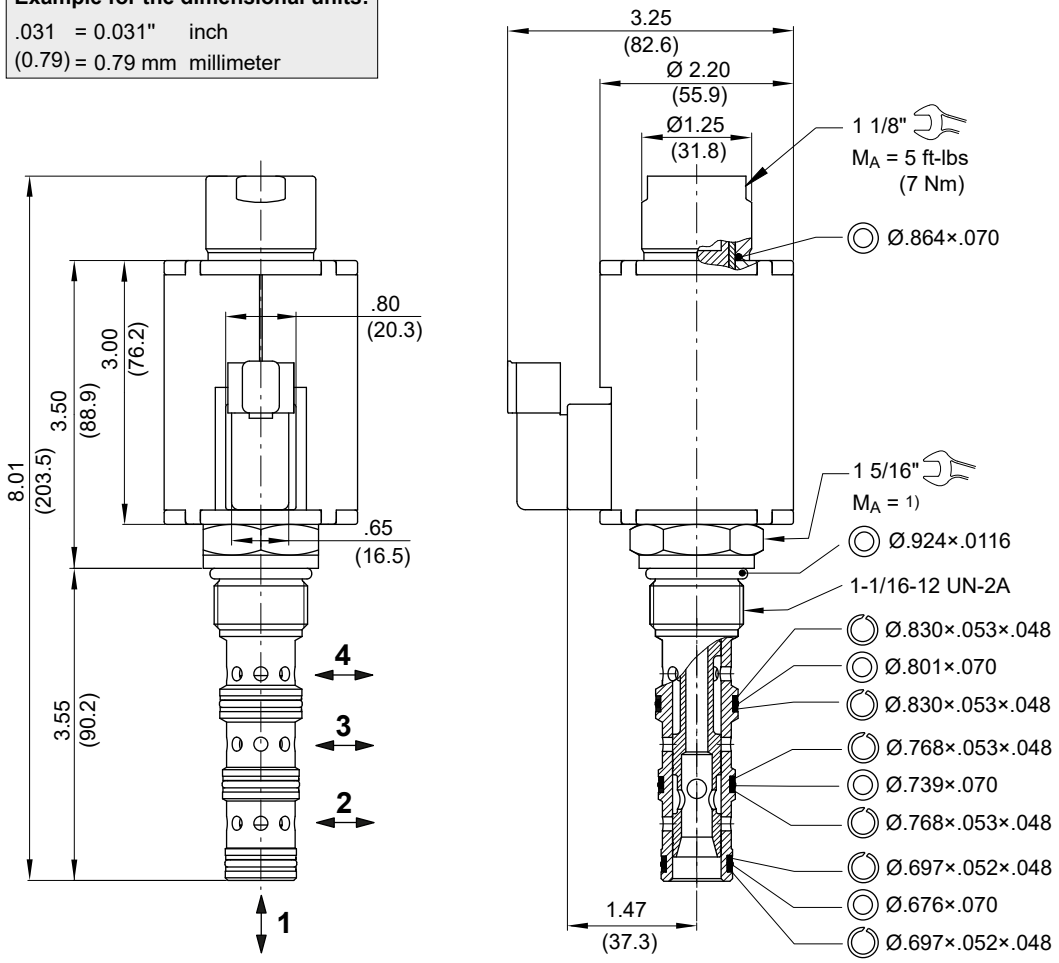

Installation information

IMPORTANT!
1) When fitting the screw-in cartridge valve, use the specified tightening torque. The value can be found in the chapter "Technical data".

ATTENTION!
Only qualified personnel with mechanical skills may carry out any maintenance work. Generally, the only work that should ever be undertaken is to check, and possibly replace, the seals. When changing seals, oil or grease the new seals thoroughly before fitting them.

NOTE!
The seals are not available individually. The seal kit order number can be found in the chapter "Technical data".

Ordering code

Ex. ESDV - 12 - N - 4B - 0 - 24 D _

ESDV = directional valve, spool-type, direct acting
12 = SAE 12 / nominal size 10
N = NBR (nitril-butadien-rubber / BUNA) seals **(standard)**
V = FKM (fluorocarbon rubber / VITON) seals
(special seals on request)
4B = spooltype B, 4-way/2-position (closed transition)
0 = cartridge only **(standard)**

04BA	= line-mounting body G ½"-14 BSPP	aluminium	on request
04BS	= line-mounting body G ½"-14 BSPP	steel	on request
06BA	= line-mounting body G ¾"-14 BSPP	aluminium	on request
06BS	= line-mounting body G ¾"-14 BSPP	steel	on request
10TA	= line-mounting body SAE 10	aluminium	
10TS	= line-mounting body SAE 10	steel	
12TA	= line-mounting body SAE 12	aluminium	
12TS	= line-mounting body SAE 12	steel	

… = voltage e.g. 24 (24 V)
D = current DC
mating plug not supplied:
T = Deutsch axial plug connection DT04-2P (IP 67/69K)
TR = Deutsch axial plug connection DT04-2P (with protection diode, IP 67/69K) on request
F = flying leads (18 inch [450 mm])
H = ISO 4400 / DIN 43 650 connection (IP 65)

Related data sheets

Reference	Description
520-P-000050	Form tools
520-P-001020	Solenoid coil D2.2/.875
520-P-000430	Cavity C1240
520-P-000431	Threaded port body B1240

info.us@bucherhydraulics.com **www.bucherhydraulics.com**

© 2025 by Bucher Hydraulics Inc., Elgin, IL 60124, USA

All rights reserved.
Data is provided for the purpose of product description only, and must not be construed as warranted characteristics in the legal sense. The information does not relieve users from the duty of conducting their own evaluations and tests. Because the products are subject to continual improvement, we reserve the right to amend the product specifications contained in this catalogue.

BUCHER hydraulics
WWW.SUMY.IR

Directional valve 4-way/2-position

Q_{max} = 60 l/min, p_{max} = 350 bar
direct acting, spool type, switching solenoid with emergency override
Type series: ESDV-12-4C...

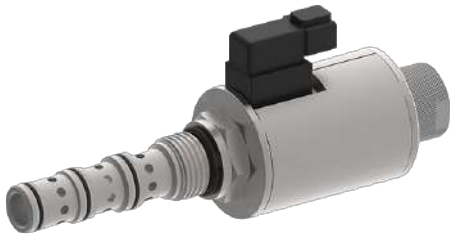

- Screw-in cartridge valve
- For cavity C1240
- All external parts zinc plated, chromited (CrVI-free)
- Installation in threaded port body type B1240
- Hardened, precision fitted spool & cage provides a reliable and long life
- High pressure wet-armature solenoids
- The slip-on coil can be rotated, and it can be replaced without opening the hydraulic envelope
- Various plug-connector systems and voltages are available

Description

The 4-way/2-position solenoid operated directional seat valves, series ESDV-12-4C... are size NG 10 / SAE 12, direct acting, pressure balanced, screw-in-valves with a 1 1/16-12 UN mounting thread. When the solenoid coil is de-energized, the main spool is held in neutral position by the return spring. Actuation of the spool happens by a wet-armature solenoid system. Port 3 is designed to be the pressure inlet port. This pressure inlet port 3 and as well as the consumer ports 4 and 2 are 5000 psi (350 bar) endurance proof and flow can be directed in both directions (see symbols). Port 1 is designed to be connected to tank and the maximum pressure is limited to 3200 psi at port 1. In neutral position, there is a connection between port 3 to 4 as well as 2 to 1. Once the solenoid coil is activated, this type of spool closes all connections and therefore only minimal spool leakage appears. The transition position has a positive overlap and is therefore closed. While the spool is moving from neutral position to actuated position there is no connection between ports 1, 2, 3 and 4 and therefore only minimal spool leakage appears. Manual override operation: Press and hold on the small plunger which is located on top of the valve with a similar object smaller than 0.180" diameter. All external parts of the screw-in valves are zinc plated and are thus suitable for use in the harshest operating environments. The slip-on coils can be replaced without opening the hydraulic envelope and can be positioned at any angle through 360°. For self-assembly, please refer to the section related data sheets.

Symbol

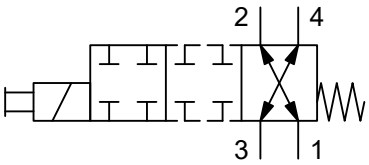

Technical data

General characteristics	Description, value, unit
Function group	Directional valve
Function	4-way/2-position
Design	Screw-in cartridge valve
Controls	switching solenoid with emergency override
Characteristic	direct acting, spool type
Transition/central position of spool/piston	zero or overlap/positive (closed)
Construction size	NG 10 / SAE 12
Thread size	1 1/16-12 UN-2A
Mounting attitude	unrestricted (preferably vertical, coil down)
Weight	1.6 kg
Cavity acc. factory standard	For cavity C1240
Tightening torque steel	98 Nm
Tightening torque aluminium	78 Nm
Tightening torque tolerance	± 10 %
Minimum ambient temperature	- 30 °C
Maximum ambient temperature	+ 80 °C
Surface protection	All external parts zinc plated, chromited (CrVI-free)
Sealing material	see ordering code
Seal kit order number	NBR: SKN-1242-S1 / SKV-1242-S1

Hydraulic characteristics	Description, value, unit
Maximum operating pressure	350 bar
Restriction of the operating pressure	220 bar
Maximum flow rate	60 l/min
Flow direction	see symbol
Hydraulic fluid	HL and HLP mineral oil according to DIN 51 524; other fluids on request!
Minimum fluid temperature	- 30 °C
Maximum fluid temperature	+ 80 °C
Viscosity range	10 ... 500 mm^2/s (cSt)
Recommended viscosity range	15 ... 250 mm^2/s (cSt)
Minimum fluid cleanliness (cleanlineless class according to ISO 4406:1999)	class 20/18/15
Internal leakage flow rate	410 ml/min by 220 bar, 574 ml/min by 350 bar

Electric characteristics	Description, value, unit
Actuator type	solenoid coil
Solenoid coils type	D2.2 /.875
Supply voltage DC	12/24 V DC
Supply voltage tolerance	± 10 %
Nominal power consumption	27 W
Switching time	45...100 ms (solenoid ON) 20...100 ms (solenoid OFF)
Relative duty cycle	100 %

WWW.SUMY.IR

Electric characteristics	Description, value, unit
Electrical connection coil	several connection types available, see ordering code
Protection class solenoid coil to ISO 20 653 / EN 60 529	IP 65 / IP 67 / IP 69K, see “Ordering code” (with appropriate mating connector and proper fitting and sealing)

NOTE!
The switching time can be strongly dependent on flow rate, pressure, oil viscosity and the dwell time under pressure. In practice, the switching time may therefore deviate from the specified value range.

NOTE!
For AC applications an external rectifier circuit is required. The effective voltage in AC (with external rectifier circuit) is 11% higher than the rated DC voltage.

NOTE!
Above 48 V a ground connection to the metal housing of the coil is required.

Performance graphs

measured with oil viscosity 33.0 mm²/s (cSt)

p = f (Q) Performance limit

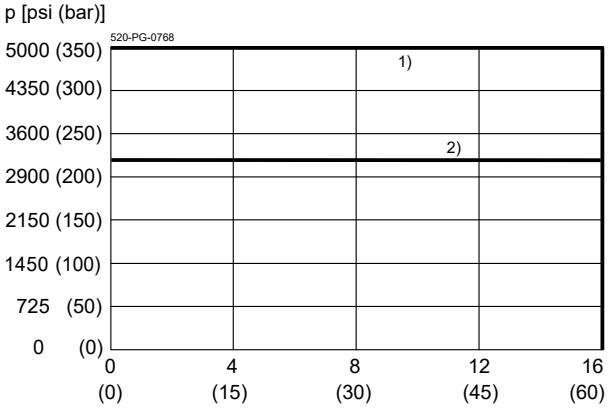

1) Anschluss 4, 3 und 2 / Port 4, 3 and 2 Q [gpm (l/min)]
2) Anschluss 1 / Port 1

Δp = f (Q) Pressure drop-flow rate characteristic

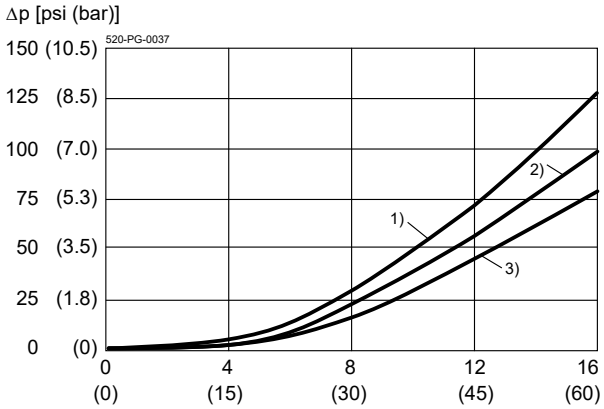

Magnet unbestromt / Solenoid de-energized
Q [gpm (l/min)]
1) 1 → 2
2) 3 → 4
3) 4 → 3, 2 → 1

Dimensions and sectional view

Beispiel für die Masseinheit:
Example for the dimensional units:

.031	= 0.031"	inch
(0.79)	= 0.79 mm	millimeter

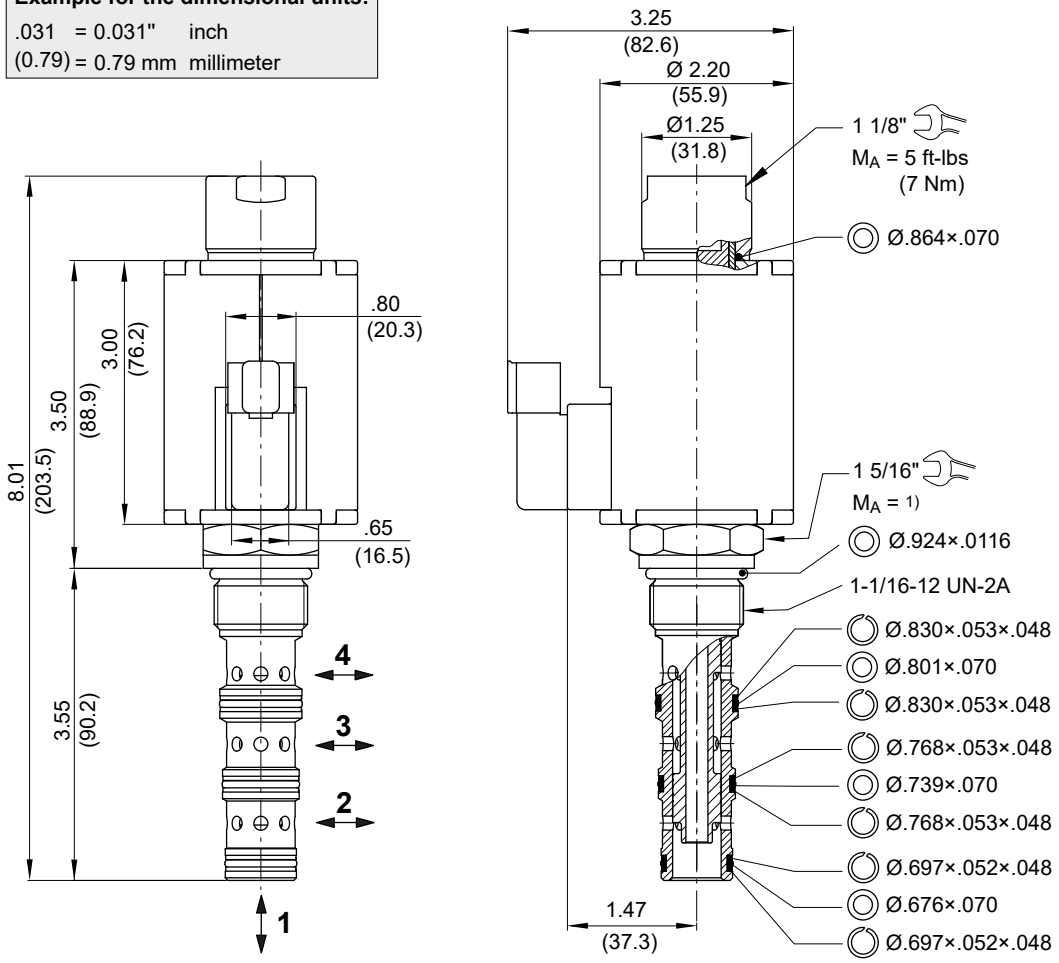

Installation information

IMPORTANT!
1) When fitting the screw-in cartridge valve, use the specified tightening torque. The value can be found in the chapter "Technical data".

ATTENTION!
Only qualified personnel with mechanical skills may carry out any maintenance work. Generally, the only work that should ever be undertaken is to check, and possibly replace, the seals. When changing seals, oil or grease the new seals thoroughly before fitting them.

NOTE!
The seals are not available individually. The seal kit order number can be found in the chapter "Technical data".

Ordering code

Ex. ESDV - 12 - N - 4C - 0 - 24 D _

ESDV = directional valve, spool-type, direct acting
12 = SAE 12 / nominal size 10
N = NBR (nitril-butadien-rubber / BUNA) seals **(standard)**
V = FKM (fluorocarbon rubber / VITON) seals
(special seals on request)
4C = spooltype C, 4-way/2-position (closed transition)
0 = cartridge only **(standard)**
04BA = line-mounting body G ½"-14 BSPP aluminium
04BS = line-mounting body G ½"-14 BSPP steel
06BA = line-mounting body G ¾"-14 BSPP aluminium
06BS = line-mounting body G ¾"-14 BSPP steel
(on request)
10TA = line-mounting body SAE 10 aluminium
10TS = line-mounting body SAE 10 steel
12TA = line-mounting body SAE 12 aluminium
12TS = line-mounting body SAE 12 steel
… = voltage e.g. 24 (24 V)
D = current DC
mating plug not supplied:
T = Deutsch axial plug connection DT04-2P (IP 67/69K)
TR = Deutsch axial plug connection DT04-2P (with protection diode, IP 67/69K) on request
F = flying leads (18 inch [450 mm])
H = ISO 4400 / DIN 43 650 connection (IP 65)

Related data sheets

Reference	Description
520-P-000050	Form tools
520-P-001020	Solenoid coil D2.2/.875
520-P-000430	Cavity C1240
520-P-000431	Threaded port body B1240

info.us@bucherhydraulics.com **www.bucherhydraulics.com**

© 2025 by Bucher Hydraulics Inc., Elgin, IL 60124, USA

All rights reserved.
Data is provided for the purpose of product description only, and must not be construed as warranted characteristics in the legal sense. The information does not relieve users from the duty of conducting their own evaluations and tests. Because the products are subject to continual improvement, we reserve the right to amend the product specifications contained in this catalogue.

BUCHER hydraulics

WWW.SUMY.IR

Directional valve 4-way/2-position

Q_{max} = 60 l/min, p_{max} = 350 bar
direct acting, spool type, switching solenoid with emergency override
Type series: ESDV-12-4D...

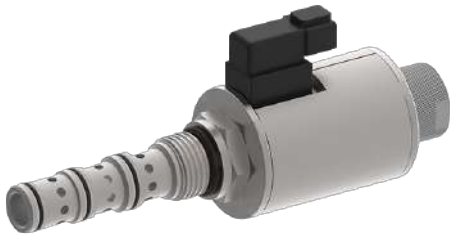

- Screw-in cartridge valve
- For cavity C1240
- All external parts zinc plated, chromited (CrVI-free)
- Installation in threaded port body type B1240
- Hardened, precision fitted spool & cage provides a reliable and long life
- High pressure wet-armature solenoids
- The slip-on coil can be rotated, and it can be replaced without opening the hydraulic envelope
- Various plug-connector systems and voltages are available

Description

The 4-way/2-position solenoid operated directional seat valves, series ESDV-12-4D... are size NG 10 / SAE 12, direct acting, pressure balanced, screw-in-valves with a 1 1/16-12 UN mounting thread. When the solenoid coil is de-energized, the main spool is held in neutral position by the return spring. Actuation of the spool happens by a wet-armature solenoid system. Port 3 is designed to be the pressure inlet port. This pressure inlet port 3 and as well as the consumer ports 4 and 2 are 5000 psi (350 bar) endurance proof and flow can be directed in both directions (see symbols). Port 1 is designed to be connected to tank and the maximum pressure is limited to 3200 psi at port 1. This version has a recirculation circuit in the output position, i.e. port 3 is connected to 1 and ports 2 and 4 are closed. Once the solenoid coil is activated, port 3 is connected to 2 and port 4 to 1. The transition position has a negative overlap and is therefore open. While the spool is moving from neutral position to actuated position ports 1, 2, 3 and 4 are connected and therefore the valve to shift "softer" and creates less pressure peaks. Manual override operation: Press and hold on the small plunger which is located on top of the valve with a similar object smaller than 0.180" diameter. All external parts of the screw-in valves are zinc plated and are thus suitable for use in the harshest operating environments. The slip-on coils can be replaced without opening the hydraulic envelope and can be positioned at any angle through 360°. For self-assembly, please refer to the section related data sheets.

Symbol

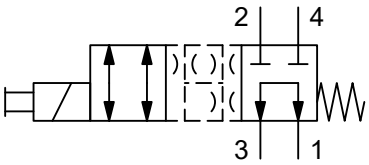

Technical data

General characteristics	Description, value, unit
Function group	Directional valve
Function	4-way/2-position
Design	Screw-in cartridge valve
Controls	switching solenoid with emergency override
Characteristic	direct acting, spool type
Transition/central position of spool/piston	zero or underlap/negative (open)
Construction size	NG 10 / SAE 12
Thread size	1 1/16-12 UN-2A
Mounting attitude	unrestricted (preferably vertical, coil down)
Weight	1.6 kg
Cavity acc. factory standard	For cavity C1240
Tightening torque steel	98 Nm
Tightening torque aluminium	78 Nm
Tightening torque tolerance	± 10 %
Minimum ambient temperature	- 30 °C
Maximum ambient temperature	+ 80 °C
Surface protection	All external parts zinc plated, chromited (CrVI-free)
Sealing material	see ordering code
Seal kit order number	NBR: SKN-1242-S1 / SKV-1242-S1

Hydraulic characteristics	Description, value, unit
Maximum operating pressure	350 bar
Restriction of the operating pressure	220 bar
Maximum flow rate	60 l/min
Flow direction	see symbol
Hydraulic fluid	HL and HLP mineral oil according to DIN 51 524; other fluids on request!
Minimum fluid temperature	- 30 °C
Maximum fluid temperature	+ 80 °C
Viscosity range	10 ... 500 mm^2/s (cSt)
Recommended viscosity range	15 ... 250 mm^2/s (cSt)
Minimum fluid cleanliness (cleanlineless class according to ISO 4406:1999)	class 20/18/15
Internal leakage flow rate	410 ml/min by 220 bar, 574 ml/min by 350 bar

Electric characteristics	Description, value, unit
Actuator type	solenoid coil
Solenoid coils type	D2.2 /.875
Supply voltage DC	12/24 V DC
Supply voltage tolerance	± 10 %
Nominal power consumption	27 W
Switching time	45...100 ms (solenoid ON) 20...100 ms (solenoid OFF)
Relative duty cycle	100 %

WWW.SUMY.IR

Electric characteristics	Description, value, unit
Electrical connection coil	several connection types available, see ordering code
Protection class solenoid coil to ISO 20 653 / EN 60 529	IP 65 / IP 67 / IP 69K, see “Ordering code” (with appropriate mating connector and proper fitting and sealing)

NOTE!
The switching time can be strongly dependent on flow rate, pressure, oil viscosity and the dwell time under pressure. In practice, the switching time may therefore deviate from the specified value range.

NOTE!
For AC applications an external rectifier circuit is required. The effective voltage in AC (with external rectifier circuit) is 11% higher than the rated DC voltage.

NOTE!
Above 48 V a ground connection to the metal housing of the coil is required.

Performance graphs

measured with oil viscosity 33.0 mm²/s (cSt)

p = f (Q) Performance limit

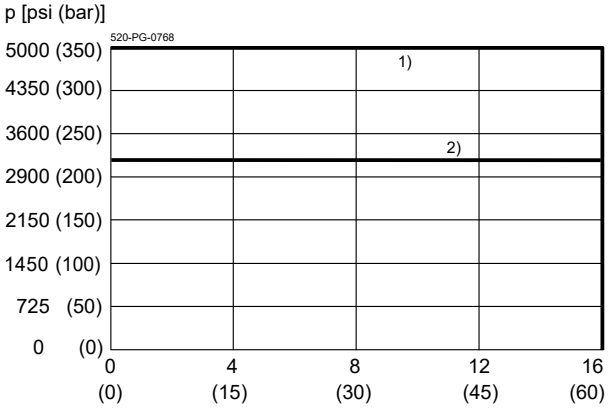

Δp = f (Q) Pressure drop-flow rate characteristic

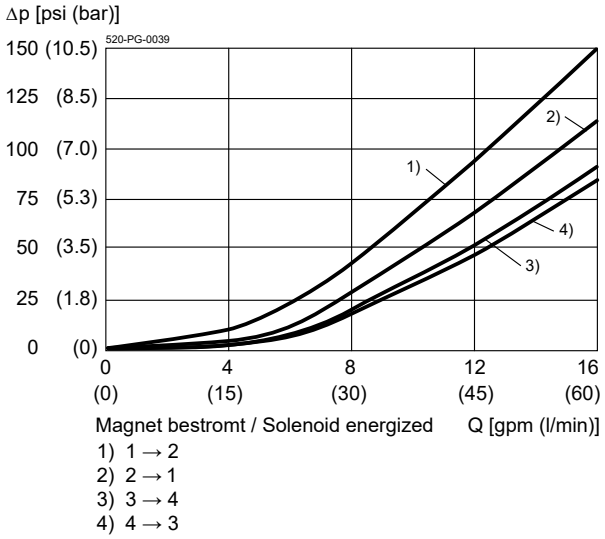

Δp = f (Q) Pressure drop-flow rate characteristic

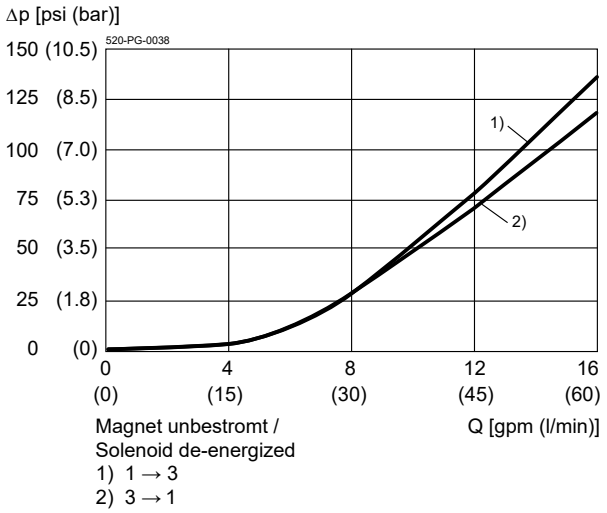

Dimensions and sectional view

Beispiel für die Masseinheit:
Example for the dimensional units:

.031 = 0.031" inch
(0.79) = 0.79 mm millimeter

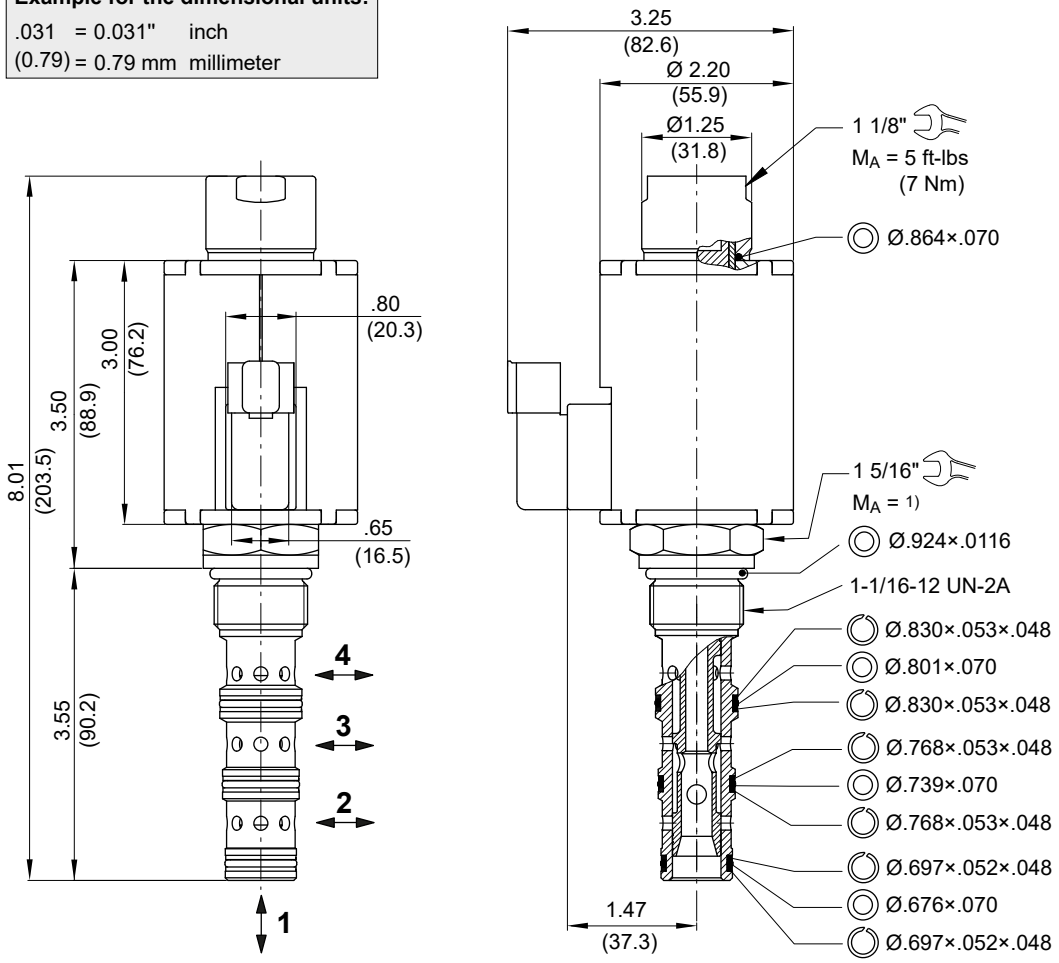

Installation information

ATTENTION!
Only qualified personnel with mechanical skills may carry out any maintenance work. Generally, the only work that should ever be undertaken is to check, and possibly replace, the seals. When changing seals, oil or grease the new seals thoroughly before fitting them.

IMPORTANT!
1) When fitting the screw-in cartridge valve, use the specified tightening torque. The value can be found in the chapter "Technical data".

NOTE!
The seals are not available individually. The seal kit order number can be found in the chapter "Technical data".

Ordering code

Ex. ESDV - 12 - N - 4D - 0 - 24 D _

ESDV = directional valve, spool-type, direct acting
12 = SAE 12 / nominal size 10
N = NBR (nitril-butadien-rubber / BUNA) seals **(standard)**
V = FKM (fluorocarbon rubber / VITON) seals
(special seals on request)
4D = spooltype D, 4-way/2-position (open transition)
0 = cartridge only **(standard)**

04BA	= line-mounting body G ½"-14 BSPP	aluminium	on request
04BS	= line-mounting body G ½"-14 BSPP	steel	on request
06BA	= line-mounting body G ¾"-14 BSPP	aluminium	on request
06BS	= line-mounting body G ¾"-14 BSPP	steel	on request
10TA	= line-mounting body SAE 10	aluminium	
10TS	= line-mounting body SAE 10	steel	
12TA	= line-mounting body SAE 12	aluminium	
12TS	= line-mounting body SAE 12	steel	

… = voltage e.g. 24 (24 V)
D = current DC

mating plug not supplied:
T = Deutsch axial plug connection DT04-2P (IP 67/69K)
TR = Deutsch axial plug connection DT04-2P (with protection diode, IP 67/69K) on request
F = flying leads (18 inch [450 mm])
H = ISO 4400 / DIN 43 650 connection (IP 65)

Related data sheets

Reference	Description
520-P-000050	Form tools
520-P-001020	Solenoid coil D2.2/.875
520-P-000430	Cavity C1240
520-P-000431	Threaded port body B1240

info.us@bucherhydraulics.com **www.bucherhydraulics.com**

© 2025 by Bucher Hydraulics Inc., Elgin, IL 60124, USA

All rights reserved.
Data is provided for the purpose of product description only, and must not be construed as warranted characteristics in the legal sense. The information does not relieve users from the duty of conducting their own evaluations and tests. Because the products are subject to continual improvement, we reserve the right to amend the product specifications contained in this catalogue.

BUCHER hydraulics
WWW.SUMY.IR

Directional valve 4-way/2-position

Q_{max} = 60 l/min, p_{max} = 350 bar
direct acting, spool type, switching solenoid with emergency override
Type series: ESDV-12-4E...

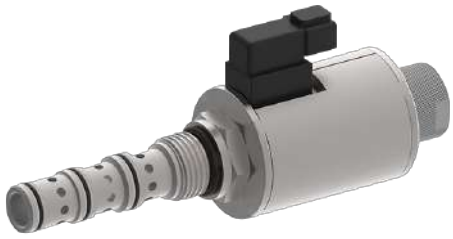

- Screw-in cartridge valve
- For cavity C1240
- All external parts zinc plated, chromited (CrVI-free)
- Installation in threaded port body type B1240
- Hardened, precision fitted spool & cage provides a reliable and long life
- High pressure wet-armature solenoids
- The slip-on coil can be rotated, and it can be replaced without opening the hydraulic envelope
- Various plug-connector systems and voltages are available

Description

The 4-way/2-position solenoid operated directional seat valves, series ESDV-12-4E... are size NG 10 / SAE 12, direct acting, pressure balanced, screw-in-valves with a 1 1/16-12 UN mounting thread. When the solenoid coil is de-energized, the main spool is held in neutral position by the return spring. Actuation of the spool happens by a wet-armature solenoid system. Port 3 is designed to be the pressure inlet port. This pressure inlet port 3 and as well as the consumer ports 4 and 2 are 5000 psi (350 bar) endurance proof and flow can be directed in both directions (see symbols). Port 1 is designed to be connected to tank and the maximum pressure is limited to 3200 psi at port 1. In neutral position, there is a connection between port 3 to 4 as well as 2 to 1. Once the solenoid coil is activated, port 4 is connected to 1 and ports 2 and 3 are closed. The transition position has a positive overlap and is therefore closed. While the spool is moving from neutral position to actuated position there is no connection between ports 1, 2, 3 and 4 and therefore only minimal spool leakage appears. Manual override operation: Press and hold on the small plunger which is located on top of the valve with a similar object smaller than 0.180" diameter. All external parts of the screw-in valves are zinc plated and are thus suitable for use in the harshest operating environments. The slip-on coils can be replaced without opening the hydraulic envelope and can be positioned at any angle through 360°. For self-assembly, please refer to the section related data sheets.

Symbol

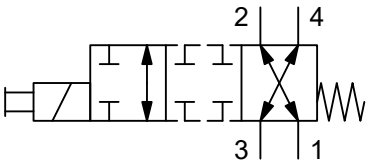

Technical data

General characteristics	Description, value, unit
Function group	Directional valve
Function	4-way/2-position
Design	Screw-in cartridge valve
Controls	switching solenoid with emergency override
Characteristic	direct acting, spool type
Transition/central position of spool/piston	zero or overlap/positive (closed)
Construction size	NG 10 / SAE 12
Thread size	1 1/16-12 UN-2A
Mounting attitude	unrestricted (preferably vertical, coil down)
Weight	1.6 kg
Cavity acc. factory standard	For cavity C1240
Tightening torque steel	98 Nm
Tightening torque aluminium	78 Nm
Tightening torque tolerance	± 10 %
Minimum ambient temperature	- 30 °C
Maximum ambient temperature	+ 80 °C
Surface protection	All external parts zinc plated, chromited (CrVI-free)
Sealing material	see ordering code
Seal kit order number	NBR: SKN-1242-S1 / SKV-1242-S1

Hydraulic characteristics	Description, value, unit
Maximum operating pressure	350 bar
Restriction of the operating pressure	220 bar
Maximum flow rate	60 l/min
Flow direction	see symbol
Hydraulic fluid	HL and HLP mineral oil according to DIN 51 524; other fluids on request!
Minimum fluid temperature	- 30 °C
Maximum fluid temperature	+ 80 °C
Viscosity range	10 ... 500 mm^2/s (cSt)
Recommended viscosity range	15 ... 250 mm^2/s (cSt)
Minimum fluid cleanliness (cleanlineless class according to ISO 4406:1999)	class 20/18/15
Internal leakage flow rate	410 ml/min by 220 bar, 574 ml/min by 350 bar

Electric characteristics	Description, value, unit
Actuator type	solenoid coil
Solenoid coils type	D2.2 /.875
Supply voltage DC	12/24 V DC
Supply voltage tolerance	± 10 %
Nominal power consumption	27 W
Switching time	45...100 ms (solenoid ON) 20...100 ms (solenoid OFF)
Relative duty cycle	100 %

WWW.SUMY.IR

Electric characteristics	Description, value, unit
Electrical connection coil	several connection types available, see ordering code
Protection class solenoid coil to ISO 20 653 / EN 60 529	IP 65 / IP 67 / IP 69K, see “Ordering code” (with appropriate mating connector and proper fitting and sealing)

NOTE!
The switching time can be strongly dependent on flow rate, pressure, oil viscosity and the dwell time under pressure. In practice, the switching time may therefore deviate from the specified value range.

NOTE!
For AC applications an external rectifier circuit is required. The effective voltage in AC (with external rectifier circuit) is 11% higher than the rated DC voltage.

NOTE!
Above 48 V a ground connection to the metal housing of the coil is required.

Performance graphs

measured with oil viscosity 33.0 mm²/s (cSt)

p = f (Q) Performance limit

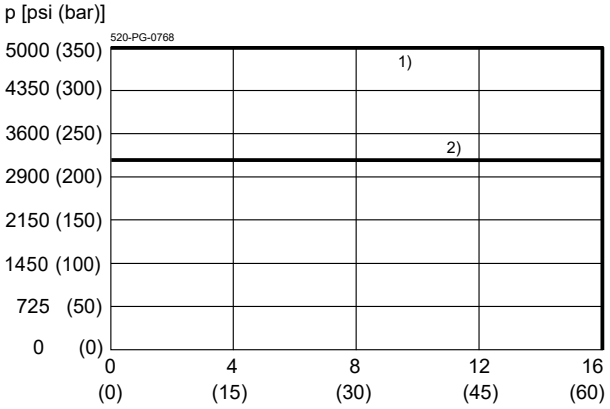

1) Anschluss 4, 3 und 2 / Port 4, 3 and 2 Q [gpm (l/min)]
2) Anschluss 1 / Port 1

Δp = f (Q) Pressure drop-flow rate characteristic

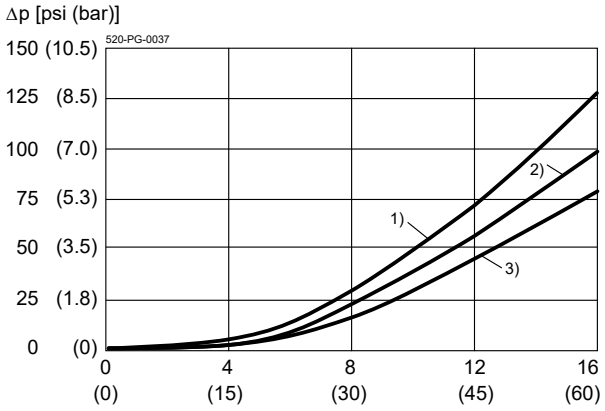

Magnet unbestromt / Solenoid de-energized
Q [gpm (l/min)]
1) 1 → 2
2) 3 → 4
3) 4 → 3, 2 → 1

Dimensions and sectional view

Beispiel für die Masseinheit:
Example for the dimensional units:

.031	= 0.031"	inch
(0.79)	= 0.79 mm	millimeter

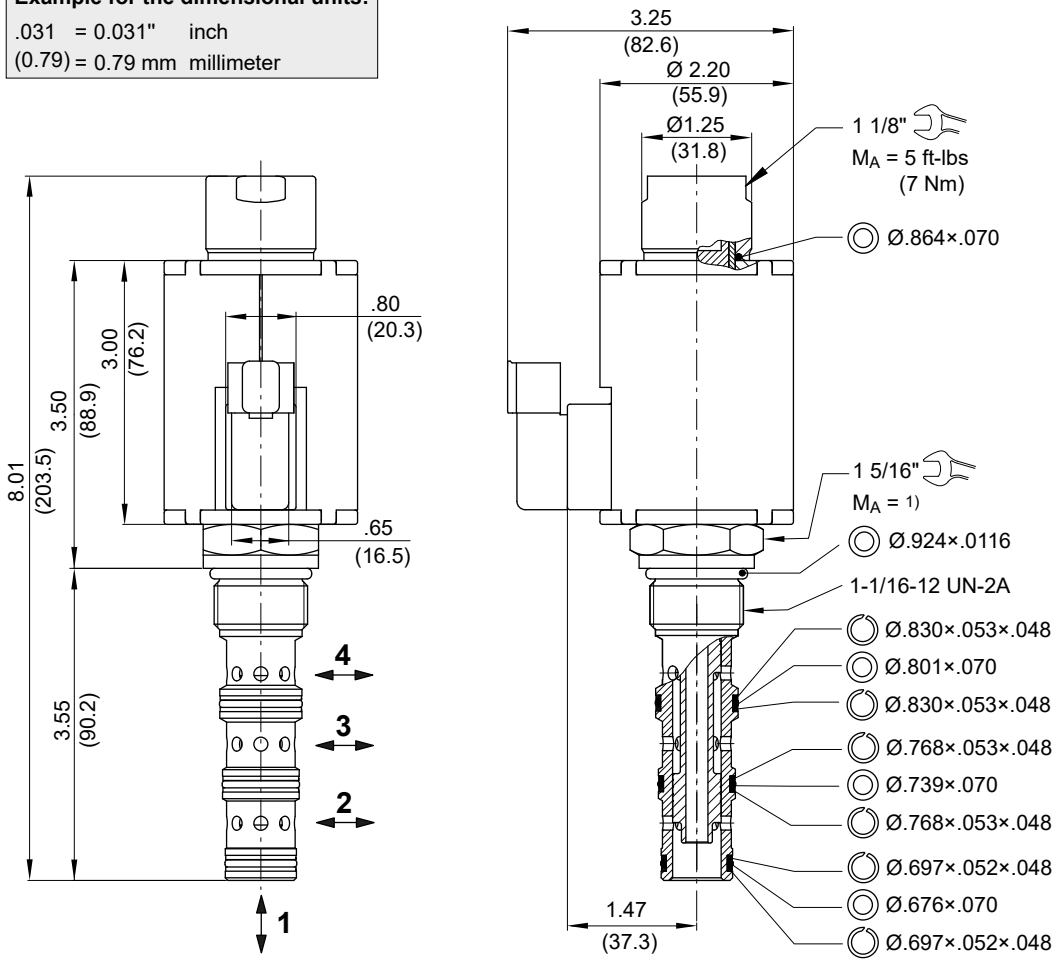

Installation information

IMPORTANT!
1) When fitting the screw-in cartridge valve, use the specified tightening torque. The value can be found in the chapter "Technical data".

ATTENTION!
Only qualified personnel with mechanical skills may carry out any maintenance work. Generally, the only work that should ever be undertaken is to check, and possibly replace, the seals. When changing seals, oil or grease the new seals thoroughly before fitting them.

NOTE!
The seals are not available individually. The seal kit order number can be found in the chapter "Technical data".

Ordering code

Ex. ESDV - 12 - N - 4E - 0 - 24 D _

ESDV = directional valve, spool-type, direct acting
12 = SAE 12 / nominal size 10
N = NBR (nitril-butadien-rubber / BUNA) seals **(standard)**
V = FKM (fluorocarbon rubber / VITON) seals
(special seals on request)
4E = spooltype C, 4-way/2-position (closed transition)
0 = cartridge only **(standard)**
04BA = line-mounting body G ½"-14 BSPP aluminium
04BS = line-mounting body G ½"-14 BSPP steel
06BA = line-mounting body G ¾"-14 BSPP aluminium
06BS = line-mounting body G ¾"-14 BSPP steel
(on request)
10TA = line-mounting body SAE 10 aluminium
10TS = line-mounting body SAE 10 steel
12TA = line-mounting body SAE 12 aluminium
12TS = line-mounting body SAE 12 steel
… = voltage e.g. 24 (24 V)
D = current DC
mating plug not supplied:
T = Deutsch axial plug connection DT04-2P (IP 67/69K)
TR = Deutsch axial plug connection DT04-2P (with protection diode, IP 67/69K) on request
F = flying leads (18 inch [450 mm])
H = ISO 4400 / DIN 43 650 connection (IP 65)

Related data sheets

Reference	Description
520-P-000050	Form tools
520-P-001020	Solenoid coil D2.2/.875
520-P-000430	Cavity C1240
520-P-000431	Threaded port body B1240

info.us@bucherhydraulics.com **www.bucherhydraulics.com**

© 2025 by Bucher Hydraulics Inc., Elgin, IL 60124, USA

All rights reserved.
Data is provided for the purpose of product description only, and must not be construed as warranted characteristics in the legal sense. The information does not relieve users from the duty of conducting their own evaluations and tests. Because the products are subject to continual improvement, we reserve the right to amend the product specifications contained in this catalogue.

BUCHER hydraulics
WWW.SUMY.IR

General information
Cavity

Type series: AN

Dimensions and sectional view

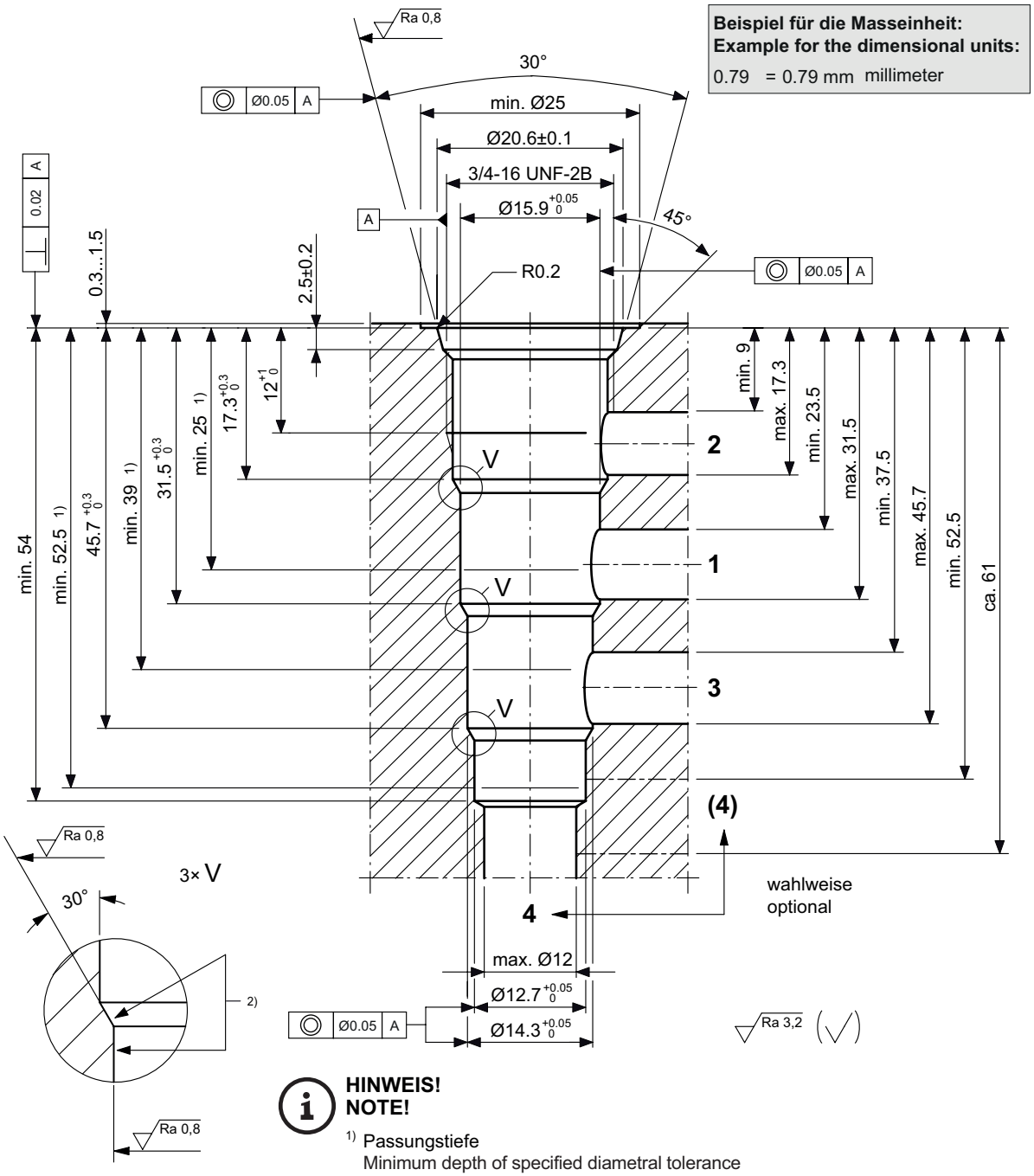

HINWEIS!
NOTE!

1) Passungstiefe
Minimum depth of specified diametral tolerance

2) Der Gewindeauslauf darf die Ringfläche und Ø15. 9 nicht verletzen.
The thread runout must not damage the ring surface or the Ø15.9.

Installation information

ATTENTION!
You must maintain the specified positional and diametral tolerances. To ensure trouble-free operation of the screw-in cartridges, we strongly recommend that pilot drilling, boring, reaming and cavity thread-cutting are always performed in one setup.

NOTE!
We offer form tool sets for sale or hire. For further information, see data sheet 400-P-040011.

NOTE!
Cavity type to factory standard.

info.ch@bucherhydraulics.com **www.bucherhydraulics.com**

© 2023 by Bucher Hydraulics AG Frutigen, 3714 Frutigen, Switzerland

All rights reserved.
Data is provided for the purpose of product description only, and must not be construed as warranted characteristics in the legal sense. The information does not relieve users from the duty of conducting their own evaluations and tests. Because the products are subject to continual improvement, we reserve the right to amend the product specifications contained in this catalogue.

BUCHER hydraulics
WWW.SUMY.IR

Directional valve 4-way/2-position

Q_{max} = 25 l/min, p_{max} = 250 bar
direct acting, spool type, switching solenoid
Type series: WK42A_A5...

- Screw-in cartridge valve
- For cavity AN
- All external parts with zinc-nickel plating according to DIN EN ISO 19598
- Installation in threaded port body type GANA
- With manual override
- The slip-on coil can be rotated, and it can be replaced without opening the hydraulic envelope
- High pressure wet-armature solenoids
- Various plug-connector systems and voltages are available

Description

The 4-way/2-position solenoid operated spool valves, series WK42A_A5..., are size 5, direct acting, pressure balanced screw-in valves with a 3/4-16 UNF-2A mounting thread. The straightforward design delivers an outstanding price/performance ratio. All external parts of the screw-in valves are zinc-nickel plated, and are thus suitable for use in the harshest operating environments. The slip-on coils can be replaced without opening the hydraulic envelope and can be positioned at any angle through 360°. These valves are primarily used in mobile and industrial applications as pilot valves for controlling the travel direction of actuators such as hydraulic motors and cylinders. For self-assembly, please refer to the section related data sheets.

Symbol

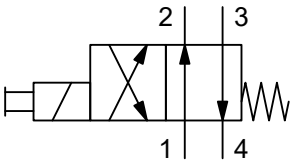

Technical data

General characteristics	Description, value, unit
Function group	Directional valve
Function	4-way/2-position
Design	Screw-in cartridge valve
Controls	switching solenoid
Characteristic	direct acting, spool type
Construction size	NG 5
Thread size	3/4-16 UNF-2A
Mounting attitude	unrestricted
Weight	0.40 kg
Cavity acc. factory standard	For cavity AN
Tightening torque steel	40 Nm
Tightening torque aluminium	40 Nm
Tightening torque tolerance	± 10 %
Minimum ambient temperature	- 30 °C
Maximum ambient temperature	+ 50 °C
Surface protection	All external parts with zinc-nickel plating according to DIN EN ISO 19598
Sealing material	see ordering code
Seal kit order number	NBR: DS-248-N / FKM: DS-248-V

Hydraulic characteristics	Description, value, unit
Maximum operating pressure	250 bar
Maximum flow rate	25 l/min
Flow direction	see symbol
Hydraulic fluid	HL and HLP mineral oil according to DIN 51 524; other fluids on request!
Minimum fluid temperature	- 30 °C
Maximum fluid temperature	+ 80 °C
Viscosity range	10 ... 500 mm^2/s (cSt)
Recommended viscosity range	15 ... 250 mm^2/s (cSt)
Minimum fluid cleanliness (cleanlineless class according to ISO 4406:1999)	class 20/18/15

Electric characteristics	Description, value, unit
Actuator type	solenoid coil
Solenoid coils type	D36
Supply voltage DC	12/24 V DC
Supply voltage AC	115/230 (50 ... 60 Hz) V AC
Supply voltage tolerance	± 10 %
Nominal power consumption	Version "E": V DC = 17 W / V AC = 17 W Version "N* V DC = 27 W / V AC = 25 W

WWW.SUMY.IR

Electric characteristics	Description, value, unit
Switching time	Version "N": 32...80 ms (energized) 15...60 ms (de-energized) Version "E" 45...80 ms (energized) 20...60 ms (de-energized)
Relative duty cycle	100 %
Electrical connection coil	several connection types available, see ordering code
Protection class solenoid coil to ISO 20 653 / EN 60 529	several classes of protection available, see ordering code (with appropriate mating connector and proper fitting and sealing)

NOTE!
The switching time can be strongly dependent on flow rate, pressure, oil viscosity and the dwell time under pressure. In practice, the switching time may therefore deviate from the specified value range.

Performance graphs

measured with oil viscosity 33.0 mm²/s (cSt), coil at steady-state temperature and 10 % undervoltage

p = f (Q) Performance limit

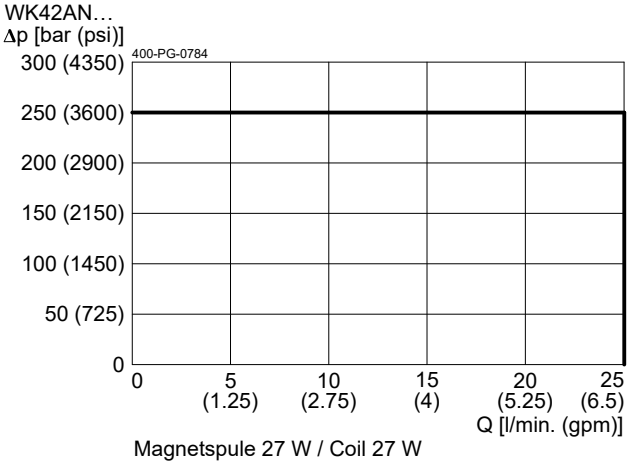

Magnetspule 27 W / Coil 27 W

p = f (Q) Performance limit

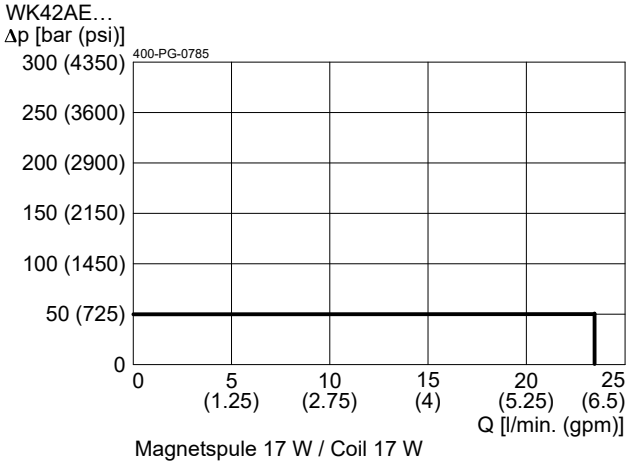

Magnetspule 17 W / Coil 17 W

Δp = f (Q) Pressure drop-flow rate characteristic

WK42AN… / WK42AE…

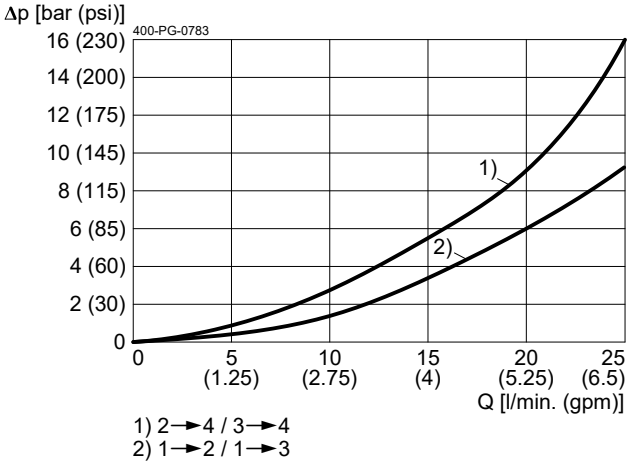

Dimensions and sectional view

Beispiel für die Masseinheit:
Exampel for the dimensional units:

0.79	= 0.79 mm	millimeter
(.031)	= 0.031"	inch

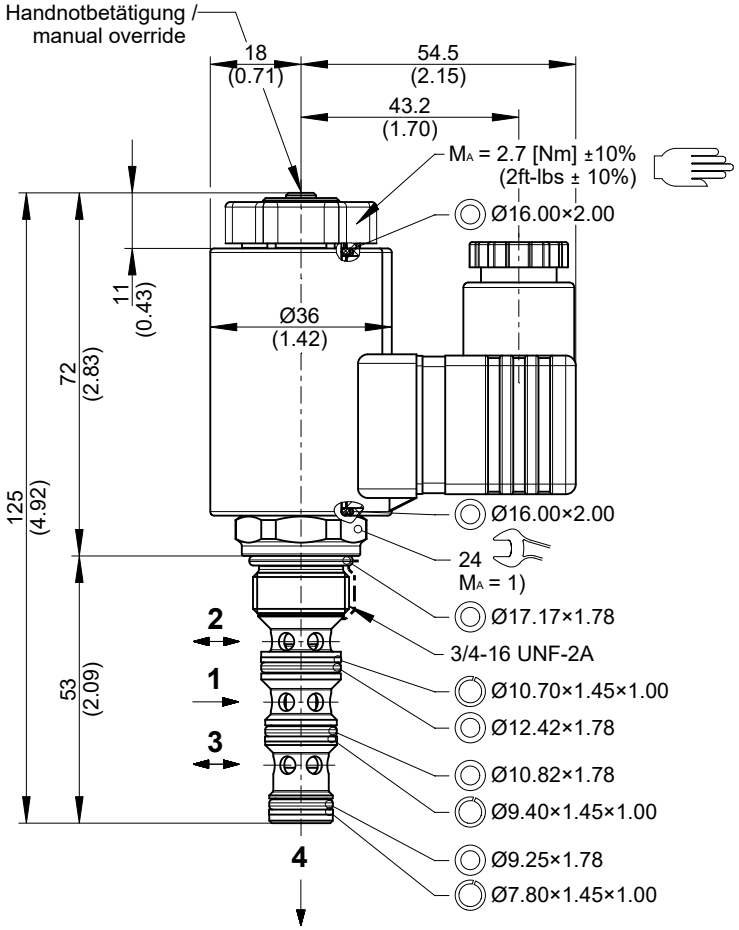

BUCHER hydraulics
WWW.SUMY.IR

Installation information

NOTE!
1) When fitting the screw-in cartridge valve, use the specified tightening torque. The value can be found in the chapter "Technical data".

ATTENTION!
Only qualified personnel with mechanical skills may carry out any maintenance work. Generally, the only work that should ever be undertaken is to check, and possibly replace, the seals. When changing seals, oil or grease the new seals thoroughly before fitting them.

NOTE!
The seals are not available individually. The seal kit order number can be found in the chapter "Technical data".

Ordering code

Related data sheets

Reference	Description
400-P-040011	Form tools
400-P-040191	Cavity AN
400-P-720121	Threaded port body GANA
400-P-120110	Solenoid coil D36

info.ch@bucherhydraulics.com **www.bucherhydraulics.com**

© 2024 by Bucher Hydraulics AG Frutigen, 3714 Frutigen, Switzerland

All rights reserved.
Data is provided for the purpose of product description only, and must not be construed as warranted characteristics in the legal sense. The information does not relieve users from the duty of conducting their own evaluations and tests. Because the products are subject to continual improvement, we reserve the right to amend the product specifications contained in this catalogue.

BUCHER hydraulics

WWW.SUMY.IR

Directional valve 4-way/2-position

Q_{max} = 30 l/min, p_{max} = 250 bar
direct acting, spool type, switching solenoid
Type series: WK42AD_A5...

- Screw-in cartridge valve
- For cavity AN
- All external parts with zinc-nickel plating according to DIN EN ISO 19598
- Installation in threaded port body type GANA
- With manual override
- The slip-on coil can be rotated, and it can be replaced without opening the hydraulic envelope
- High pressure wet-armature solenoids
- Various plug-connector systems and voltages are available

Description

The 4-way/2-position solenoid operated spool valves, series WK42AD_A5..., are size 5, direct acting, pressure balanced screw-in valves with a 3/4-16 UNF-2A mounting thread. The straightforward design delivers an outstanding price/performance ratio. All external parts of the screw-in valves are zinc-nickel plated, and are thus suitable for use in the harshest operating environments. The slip-on coils can be replaced without opening the hydraulic envelope and can be positioned at any angle through 360°. These valves are primarily used in mobile and industrial applications as pilot valves for controlling the travel direction of actuators such as hydraulic motors and cylinders. For self-assembly, please refer to the section related data sheets.

Symbol

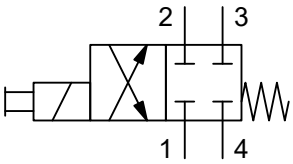

Technical data

General characteristics	Description, value, unit
Function group	Directional valve
Function	4-way/2-position
Design	Screw-in cartridge valve
Controls	switching solenoid
Characteristic	direct acting, spool type
Construction size	NG 5
Thread size	3/4-16 UNF-2A
Mounting attitude	unrestricted
Weight	0.40 kg
Cavity acc. factory standard	For cavity AN
Tightening torque steel	40 Nm
Tightening torque aluminium	40 Nm
Tightening torque tolerance	± 10 %
Minimum ambient temperature	- 30 °C
Maximum ambient temperature	+ 50 °C
Surface protection	All external parts with zinc-nickel plating according to DIN EN ISO 19598
Sealing material	see ordering code
Seal kit order number	NBR: DS-248-N / FKM: DS-248-V

Hydraulic characteristics	Description, value, unit
Maximum operating pressure	250 bar
Maximum flow rate	30 l/min
Flow direction	see symbol
Hydraulic fluid	HL and HLP mineral oil according to DIN 51 524; other fluids on request!
Minimum fluid temperature	- 30 °C
Maximum fluid temperature	+ 80 °C
Viscosity range	10 ... 500 mm^2/s (cSt)
Recommended viscosity range	15 ... 250 mm^2/s (cSt)
Minimum fluid cleanliness (cleanlineless class according to ISO 4406:1999)	class 20/18/15

Electric characteristics	Description, value, unit
Actuator type	solenoid coil
Solenoid coils type	D36
Supply voltage DC	12/24 V DC
Supply voltage AC	115/230 (50 ... 60 Hz) V AC
Supply voltage tolerance	± 10 %
Nominal power consumption	Version "N": V DC = 27 W / V AC = 25 W Version "E": V DC = 17 W / V AC = 17 W

WWW.SUMY.IR

Electric characteristics	Description, value, unit
Switching time	Version "N": 32...80 ms (energized) 15...60 ms (de-energized) Version "E": 45...80 ms (energized) 20...60 ms (de-energized)
Relative duty cycle	100 %
Electrical connection coil	several connection types available, see ordering code
Protection class solenoid coil to ISO 20 653 / EN 60 529	several classes of protection available, see ordering code (with appropriate mating connector and proper fitting and sealing)

NOTE!
The switching time can be strongly dependent on flow rate, pressure, oil viscosity and the dwell time under pressure. In practice, the switching time may therefore deviate from the specified value range.

Performance graphs

measured with oil viscosity 33.0 mm²/s (cSt), coil at steady-state temperature and 10 % undervoltage

p = f (Q) Performance limit

WK42ADN…

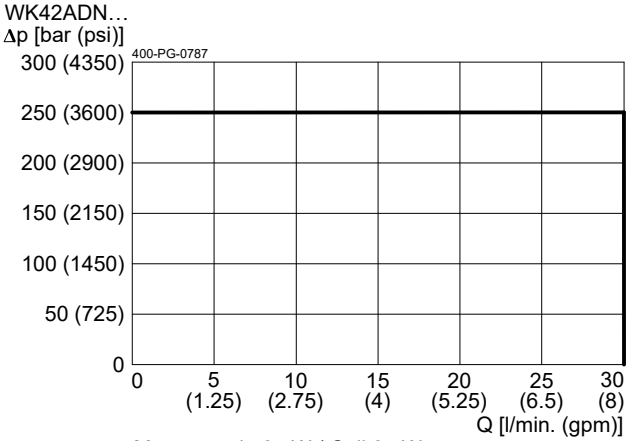

Magnetspule 27 W / Coil 27 W

p = f (Q) Performance limit

WK42ADE…

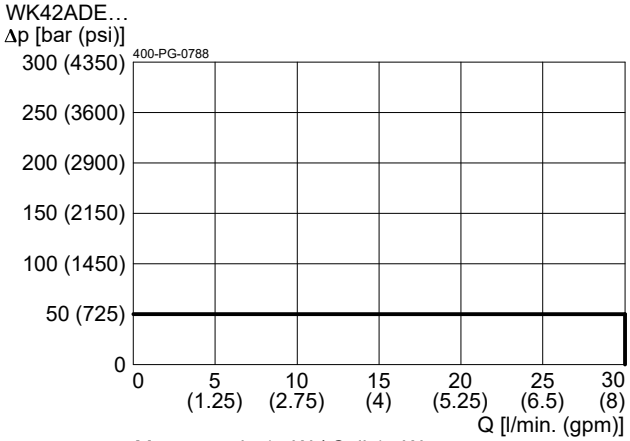

Magnetspule 17 W / Coil 17 W

Δp = f (Q) Pressure drop-flow rate characteristic

WK42ADN… / WK42ADE…

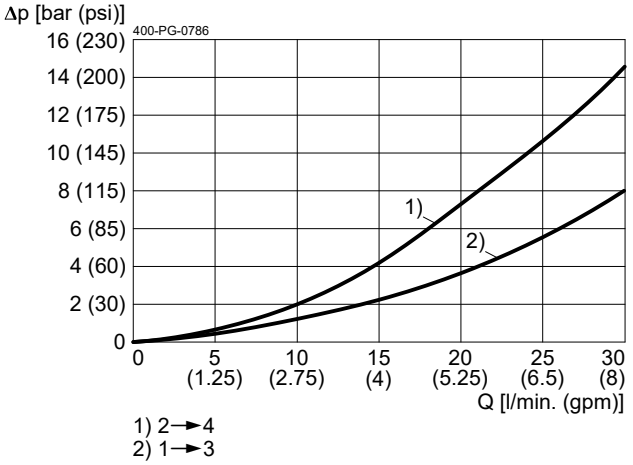

Dimensions and sectional view

Beispiel für die Masseinheit:
Exampel for the dimensional units:

0.79	= 0.79 mm	millimeter
(.031)	= 0.031"	inch

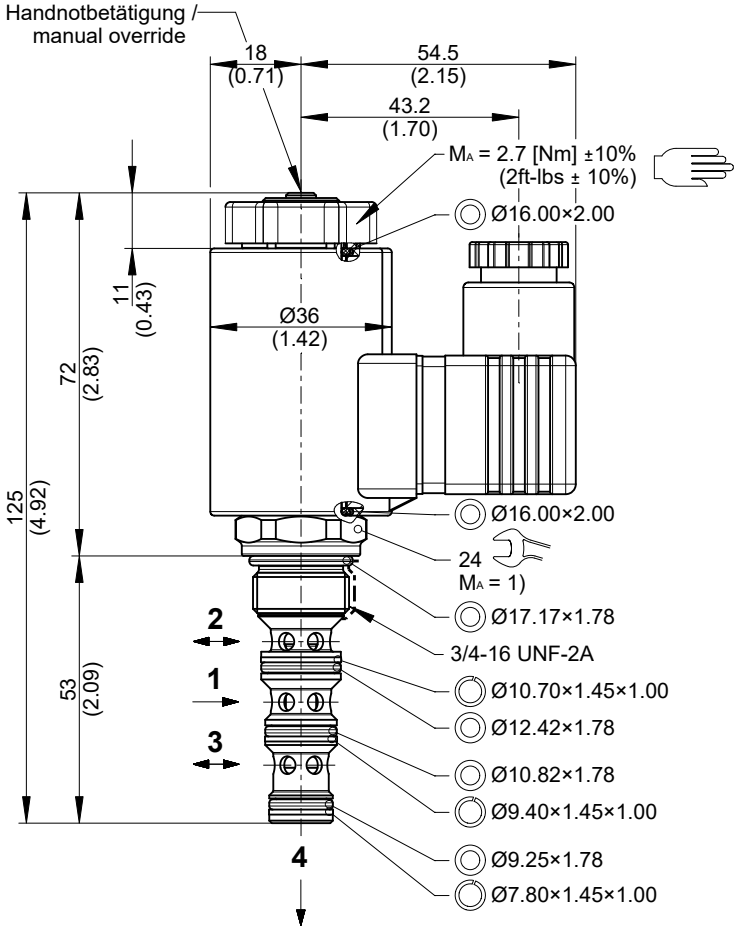

BUCHER hydraulics
WWW.SUMY.IR

Installation information

NOTE!
1) When fitting the screw-in cartridge valve, use the specified tightening torque. The value can be found in the chapter "Technical data".

ATTENTION!
Only qualified personnel with mechanical skills may carry out any maintenance work. Generally, the only work that should ever be undertaken is to check, and possibly replace, the seals. When changing seals, oil or grease the new seals thoroughly before fitting them.

NOTE!
The seals are not available individually. The seal kit order number can be found in the chapter "Technical data".

Ordering code

z.B. D | K | 42AD | N | A | 5 | _ | - | 2 | 24 | D | _

W	=	Wegventil / Directional valve				
K	=	Spool-type / Schieber-Kolben-Ausführung				
42AD	=	4-Wege/2-Position, spool type / 4-Wege/2-Stellungen, Schieber-Kolben				
N	=	Electrically operated, 12 VDC / 24 VDC / 110 VAC / 230 VAC / elektrisch betätigt, 12 VDC / 24 VDC / 110 VAC / 230 VAC (Standard)				
E	=	Electrically operated, 12 VDC / 110 VAC / elektrisch betätigt, 12 VDC / 110 VAC				
A ... Q	=	Standard-Ausführung gemäß gültigem Datenblatt				
Z ... R	=	Special-Ausführung (auf Anfrage)				
5	=	Nenngröße / Nominal size 5				
(blank)	=	NBR (Nitril-Butadien-Kautschuk / Nitrile Butadiene Rubber) (Standard)				
V	=	FKM (Fluor-Kautschuk / Fluoroelastomer)				
		(Spezial-Dichtungen auf Anfrage)				
1 ... 9	=	Technische Änderungen (ein Buchstabe wird weggelassen)				
...	=	Spannungen 24 (24 V)				
D	=	Strom / DC				
A	=	Strom / AC				
(blank)	=	DIN EN 175301-803 Anschluss	3-polig + E (Standard)	(IP 65)	mit Gegenstecker / mating plug	
T	=	DIN EN 175301-803 Anschluss	3-polig + E, mit Schutzdiode	(IP 65)	mit Gegenstecker / mating plug	
M100	=	DIN EN 175301-803 Anschluss	3-polig + E	(IP 65)	ohne Gegenstecker / mating plug	
J	=	Junior-Timer-Stecker-Anschluss	2-polig + E, radial	(IP 65)		
JT	=	Junior-Timer-Stecker-Anschluss	2-polig + E, radial, mit Schutzdiode	(IP 65)		
I	=	Junior-Timer-Stecker-Anschluss	2-polig + E, axial	(IP 65)		
IT	=	Junior-Timer-Stecker-Anschluss	2-polig + E, axial, mit Schutzdiode	(IP 65)		
D	=	Deutsch-Stecker-Anschluss DT04-2P	2-polig + E, 45°	(IP 67/69K)		
DT	=	Deutsch-Stecker-Anschluss DT04-2P	2-polig + E, 45°, mit Schutzdiode	(IP 67/69K)		
		Weitere Steckeranschlüsse / Varianten auf Anfrage.				
		W				
		W				
		W				

IMPORTANT!
Nicht jede Kombination von Spannungen, Stromarten und Steckeranschlüssen ist verfügbar. Weitere Varianten erhältlich.

Related data sheets

Reference	Description
400-P-040011	Form tools
400-P-040191	Cavity AN
400-P-720121	Threaded port body GANA
400-P-120110	Solenoid coil D36

info.ch@bucherhydraulics.com **www.bucherhydraulics.com**

© 2024 by Bucher Hydraulics AG Frutigen, 3714 Frutigen, Switzerland

All rights reserved.
Data is provided for the purpose of product description only, and must not be construed as warranted characteristics in the legal sense. The information does not relieve users from the duty of conducting their own evaluations and tests. Because the products are subject to continual improvement, we reserve the right to amend the product specifications contained in this catalogue.

BUCHER hydraulics

WWW.SUMY.IR

Directional valve 4-way/2-position

Q_{max} = 40 l/min, p_{max} = 350 bar
Direct acting, spool type, switching solenoid
Type series: WKDP42AD-8T...

- Screw-in cartridge valve for cavity AT/C1040
- All external parts with zinc-nickel plating according to DIN EN ISO 19598
- Installation in threaded port body type GAT-12
- Reliable switching, even after long dwell times
- Optional with manual override
- Different spool options (center position)
- Various plug-connector systems and voltages are available
- High pressure wet-armature solenoids
- The slip-on coil can be rotated, and it can be replaced without opening the hydraulic envelope

Symbol

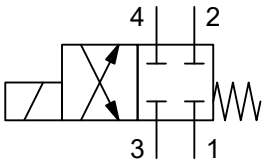

Description

The directional control valves, series WKDP42AD-8T-..., are size 8 / SAE 10, screw-in cartridge valves with a seated pilot stage and an 7/8-14 UNF-2A mounting thread. They are designed on the proven sliding-spool principle. These screw-in valves are mainly used in mobile and stationary applications for the pilot or directional control of consumers such as hydraulic motors and hydraulic cylinders. The slip-on coils can be replaced without opening the hydraulic envelope and can be positioned at any angle through 360°. All external parts of the screw-in valves are zinc-nickel plated and are thus suitable for use in the harshest operating environments. For installation and further information, please refer to the section related data sheets.

WWW.SUMY.IR

Technical data

General characteristics	Description, value, unit
Function group	directional valve
Function	4-way/2-position
Design	screw-in cartridge valve
Controls	switching solenoid
Characteristic	direct acting, spool type
MTTFd value	150 years
Construction size	NG 8 / SAE 10
Thread size	7/8-14 UNF-2A
Mounting attitude	unrestricted
Weight	0.63 kg
Cavity acc. factory standard	AT/C1040
Tightening torque steel	80 Nm
Tightening torque aluminium	80 Nm
Tightening torque tolerance	± 10 %
Minimum ambient temperature	- 30 °C
Maximum ambient temperature	+ 50 °C
Surface protection	all external parts with zinc-nickel plating according to DIN EN ISO 19598
Sealing material	see ordering code

Hydraulic characteristics	Description, value, unit
Maximum operating pressure	350 bar
Maximum flow rate	40 l/min
Flow direction	see symbol
Hydraulic fluid	HL and HLP mineral oil according to DIN 51 524; other fluids on request!
Minimum fluid temperature	- 30 °C
Maximum fluid temperature	+ 80 °C
Viscosity range	10 ... 500 mm^2/s (cSt)
Recommended viscosity range	15 ... 250 mm^2/s (cSt)
Minimum fluid cleanliness (cleanlineless class according to ISO 4406:1999)	class 20/18/15

WWW.SUMY.IR

Electric characteristics	Description, value, unit
Actuator type	solenoid coil
Solenoid coils type	36X48/16.1
Supply voltage DC	12/24 V DC
Supply voltage tolerance	± 10 %
Nominal power consumption	19 W
Switching time	Switching time measured at: UN: Δp = 200 bar; Q = 30 l/min; TAmbient = 20 °C; ϑ = 46 mm2/s 50 ms (energizing) 50 ms (de-energizing)
Relative duty cycle	100 %
Electrical connection coil	several connection types available, see ordering code
Protection class solenoid coil to ISO 20 653 / EN 60 529	several classes of protection available, see ordering code (with appropriate mating connector and proper fitting and sealing)

NOTE!
The switching time can be strongly dependent on flow rate, pressure, oil viscosity and the dwell time under pressure. In practice, the switching time may therefore deviate from the specified value range.

Performance graphs

measured with oil viscosity 33.0 mm²/s (cSt), coil at steady-state temperature and 10 % undervoltage

p = f (Q) Performance limit

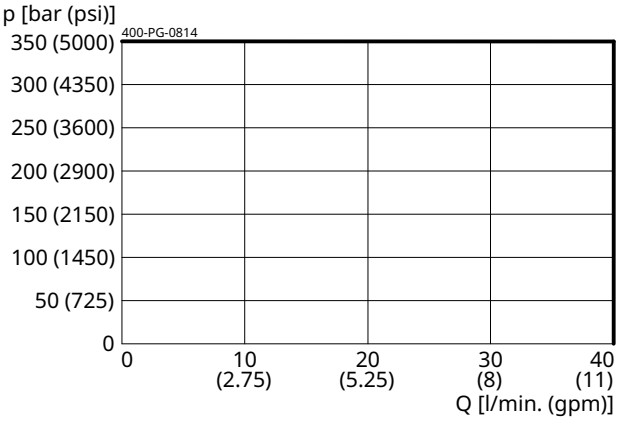

Δp = f (Q) Pressure drop-flow rate characteristic

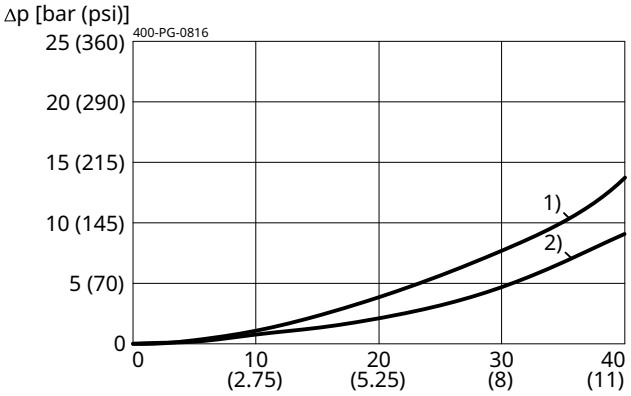

1) 1 → 4 / 4 → 1
2) 2 → 3 / 3 → 2

Installation

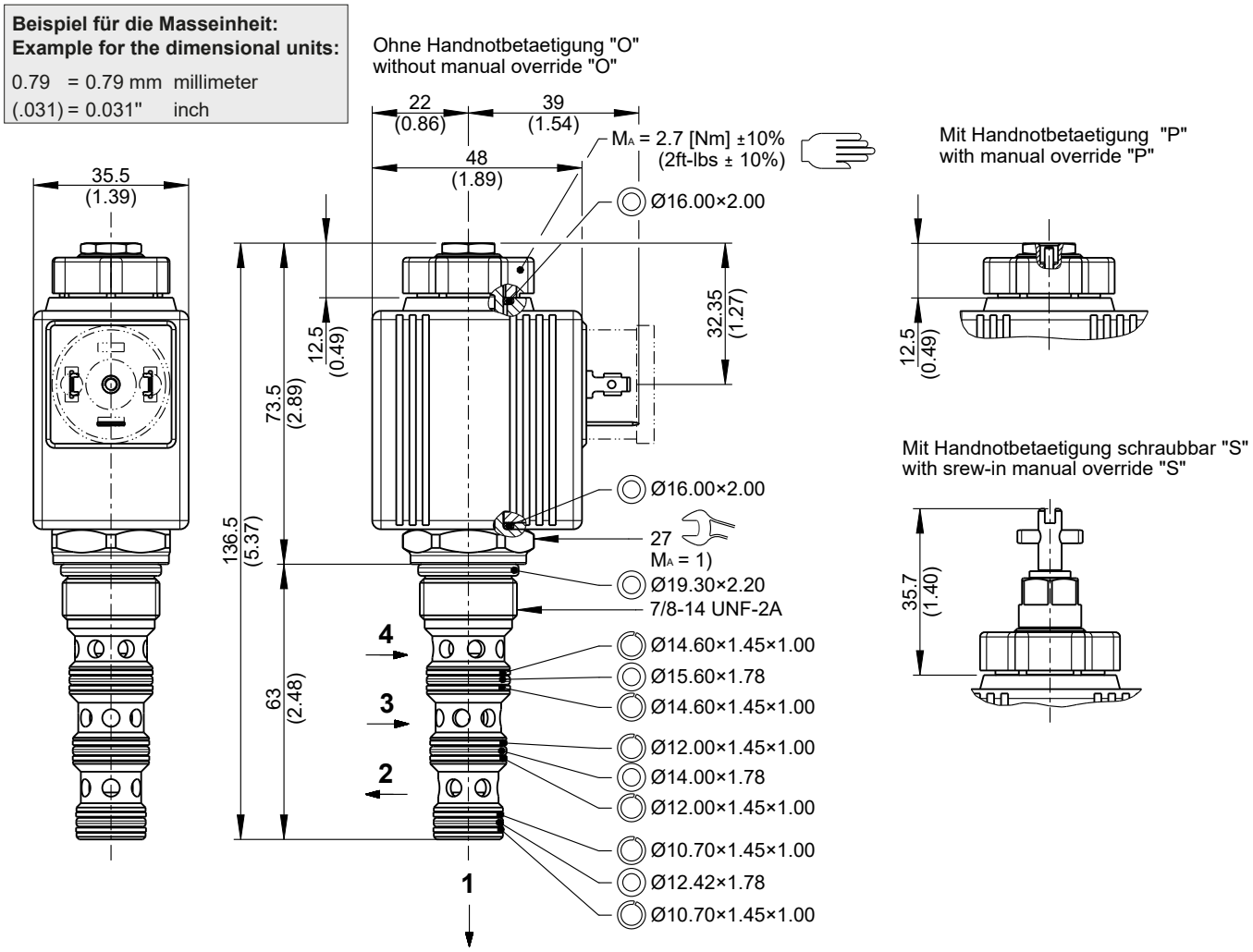

IMPORTANT!
1) When fitting the screw-in cartridge valve, use the specified tightening torque. The value can be found in the chapter "Technical data".

ATTENTION!
Only qualified personnel with mechanical skills may carry out any maintenance work. Generally, the only work that should ever be undertaken is to check, and possibly replace, the seals. When changing seals, oil or grease the new seals thoroughly before fitting them.

NOTE!
The seals are not available individually. The seal kit order number can be found in the chapter "Technical data".

Ordering code

Ex. W K D P 42AD - 8 T - O - N A 1 24 D G _

W	=	directional valve
K	=	spool-type
D	=	direct acting
P	=	electrically operated, COIL 36X48, 19 W
42AD	=	4-way/2-position, spooltype AD
8	=	nominal size 8 / SAE 10
T	=	cavity type AT/C1040
O	=	without manual override
P	=	with manual override
S	=	with screwable manual override
N	=	NBR (nitril-butadien-rubber / BUNA) seals **(standard)**
V	=	FKM (fluorocarbon rubber / VITON) seals (special seals on request)
A ... Q	=	standard model according to valid data sheet
Z ... R	=	special model (on request)
1 ... 9	=	technical design no. (omit by ordering)
...	=	voltage e.g. 24 (24 V)
D	=	current DC
G	=	DIN EN 175301-803 connection, 3-pole 2 P+E **(standard)**, (IP 65)
GR	=	DIN EN 175301-803 connection, 3-pole 2 P+E, with protection diode, (IP 65)
J	=	Junior Timer plug connection, 2-pole radial, (IP 65)
JR	=	Junior Timer plug connection, 2-pole radial, with protection diode, (IP 65)
U	=	Deutsch plug connection DT04-2P, 2-pole radial, (IP 67/69K)
UR	=	Deutsch plug connection DT04-2P, 2-pole radial, with protection diode, (IP 67/69K)
		other plug-variants, please consult BUCHER.
(blank)	=	connection without mating plug **(standard)**
Q	=	only connection “G“ and “GR“ with mating plug

mating plug not supplied

IMPORTANT!
Not every combination of voltage values and plug connections available.

Related data sheets

Reference	Description
400-P-040011	form tools
400-P-040301	cavity AT/C1040
400-P-738131	threaded port body GAT-12-...
400-P-120112	solenoid coil 36X48/16.1
400-P-010101	MTTFd Values for Hydraulic Valves

info.ch@bucherhydraulics.com **www.bucherhydraulics.com**

© 2026 by Bucher Hydraulics AG Frutigen, 3714 Frutigen, Switzerland

All rights reserved.
Data is provided for the purpose of product description only, and must not be construed as warranted characteristics in the legal sense. The information does not relieve users from the duty of conducting their own evaluations and tests. Because the products are subject to continual improvement, we reserve the right to amend the product specifications contained in this catalogue.

BUCHER hydraulics

WWW.SUMY.IR

Directional valve 4-way/2-position

Q_{max} = 5 l/min, p_{max} = 420 bar
direct acting, spool type, switching solenoid with emergency override
Type series: WKP42ALA1...

- Screw-in cartridge valve
- For cavity AN
- All external parts with zinc-nickel plating according to DIN EN ISO 19598
- Installation in threaded port body type GANA
- Can be used as a high-pressure pilot valve
- With manual override
- The slip-on coil can be rotated, and it can be replaced without opening the hydraulic envelope
- "Low watt" version
- High pressure wet-armature solenoids
- Various plug-connector systems and voltages are available

Description

The 4-way/2-position solenoid operated spool valves, series WKP42..., are size 1, direct acting, pressure balanced screw-in valves with a 3/4-16 UNF mounting thread. They are designed on the proven sliding-spool principle. The straightforward design delivers an outstanding price/performance ratio. All external parts of the screw-in valves are zinc-nickel plated and are thus suitable for use in the harshest operating environments. The slip-on coils can be replaced without opening the hydraulic envelope and can be positioned at any angle through 360°. These valves are primarily used in mobile and industrial applications as pilot valves for controlling the travel direction of actuators such as hydraulic motors and cylinders. For self-assembly, please refer to the section related data sheets.

Symbol

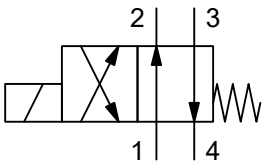

Technical data

General characteristics	Description, value, unit
Function group	Directional valve
Function	4-way/2-position
Design	Screw-in cartridge valve
Controls	switching solenoid with emergency override
Characteristic	direct acting, spool type
Construction size	NG 1
Thread size	3/4-16 UNF-2A
Mounting attitude	unrestricted
Weight	0.48 kg
Cavity acc. factory standard	For cavity AN
Tightening torque steel	60 Nm
Tightening torque aluminium	60 Nm
Tightening torque tolerance	± 10 %
Minimum ambient temperature	- 25 °C
Maximum ambient temperature	+ 50 °C
Surface protection	All external parts with zinc-nickel plating according to DIN EN ISO 19598
Sealing material	see ordering code
Seal kit order number	NBR: DS-248-N / FKM: DS-248-V

Hydraulic characteristics	Description, value, unit
Maximum operating pressure	420 bar
Restriction of the operating pressure	at port 4 max. 250 bar
Maximum flow rate	5 l/min
Flow direction	see symbol
Hydraulic fluid	HL and HLP mineral oil according to DIN 51 524; other fluids on request!
Minimum fluid temperature	- 25 °C
Maximum fluid temperature	+ 80 °C
Viscosity range	10 ... 500 mm^2/s (cSt)
Recommended viscosity range	15 ... 250 mm^2/s (cSt)
Minimum fluid cleanliness (cleanlineless class according to ISO 4406:1999)	class 20/18/15

Electric characteristics	Description, value, unit
Actuator type	solenoid coil
Solenoid coils type	D36
Supply voltage DC	12/24 V DC
Supply voltage tolerance	± 10 %
Nominal power consumption	8 W
Relative duty cycle	100 %

WWW.SUMY.IR

Electric characteristics	Description, value, unit
Electrical connection coil	several connection types available, see ordering code
Protection class solenoid coil to ISO 20 653 / EN 60 529	several classes of protection available, see ordering code (with appropriate mating connector and proper fitting and sealing)

Performance graphs

measured with oil viscosity 33.0 mm²/s (cSt), coil at steady-state temperature and 10 % undervoltage

p = f (Q) Performance limit

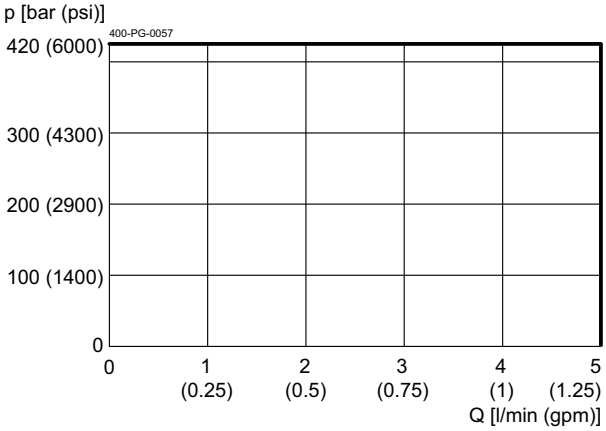

Δp = f (Q) Pressure drop-flow rate characteristic

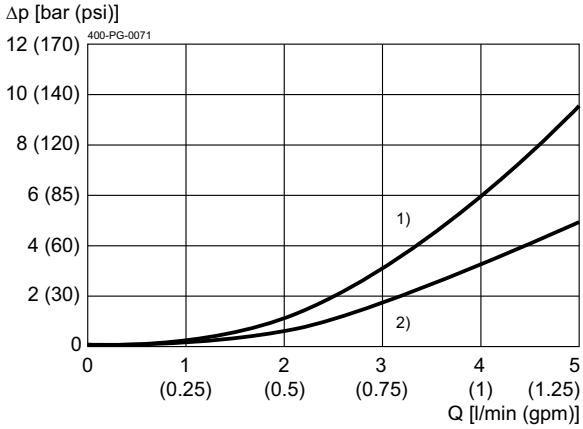

1) 2 → 4 / 3 → 4
2) 1 → 2 / 1 → 3

Dimensions and sectional view

Beispiel für die Masseinheit:
Example for the dimensional units:

0.79 = 0.79 mm millimeter
(.031) = 0.031" inch

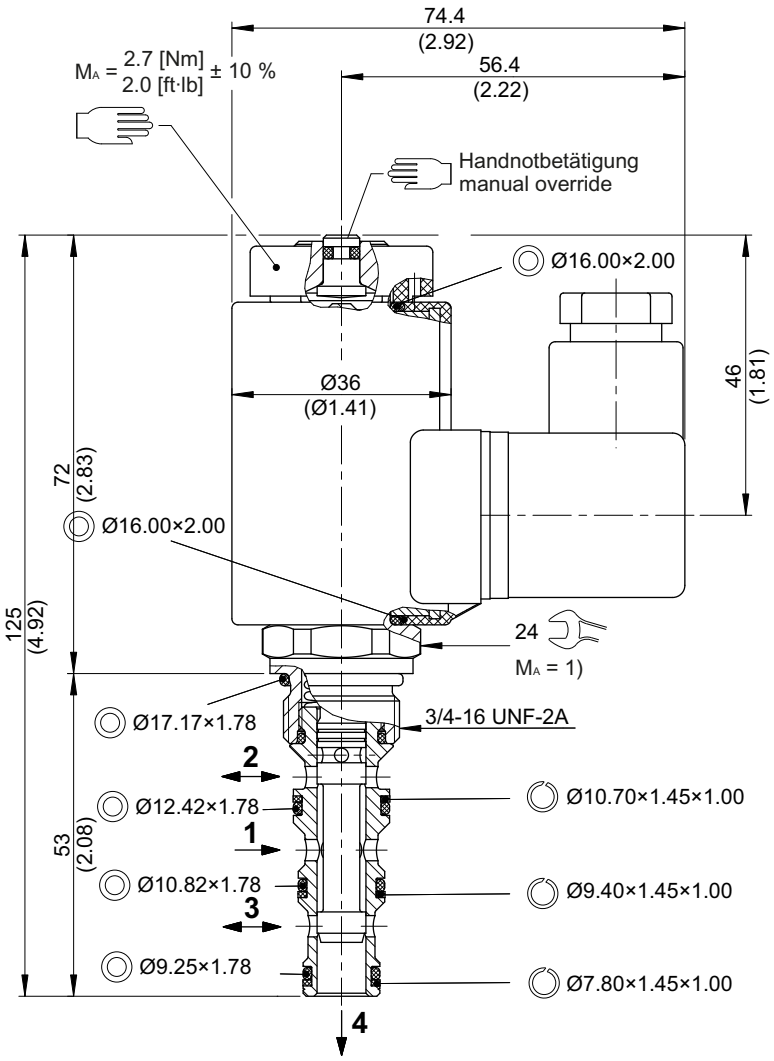

Installation information

NOTE!
1) When fitting the screw-in cartridge valve, use the specified tightening torque. The value can be found in the chapter "Technical data".

ATTENTION!
Only qualified personnel with mechanical skills may carry out any maintenance work. Generally, the only work that should ever be undertaken is to check, and possibly replace, the seals. When changing seals, oil or grease the new seals thoroughly before fitting them.

NOTE!
The seals are not available individually. The seal kit order number can be found in the chapter "Technical data".

Ordering code

Ex. W K P 42A L A 1 _ - 2 24 D _

W	=	directional valve
K	=	spool-type, direct acting
P	=	high-pressure version (420 bar)
42A	=	4-way/2-position with spool type "A"
L	=	electrically operated, V DC = 8 W
A ... Q	=	standard model according to valid data sheet *(standard)*
Z ... R	=	special model after consultation
1	=	nominal size 1 (preferably as pilot valve)
(blank)	=	NBR (nitril-butadien-rubber / BUNA) seals *(standard)*
V	=	FKM (fluorocarbon rubber / VITON) seals *(special seals - please consult BUCHER)*
1 ... 9	=	technical design no. (omit when ordering)
...	=	voltage e.g. 24 (24 V)
D	=	current DC
(blank)	=	DIN EN 175301-803 connection, 3-pole 2 P+E with mating plug, IP 65 *(standard)*
M100	=	DIN EN 175301-803 connection, 3-pole 2 P+E *the following plug-variant on request:*
DT	=	Deutsch plug connection DT04-2P (with protection diode, IP 67/69K), mating plug not supplied

Related data sheets

Reference	Description
400-P-040011	Form tools
400-P-040191	Cavity AN
400-P-720121	Threaded port body GANA
400-P-120110	Solenoid coil D36

info.ch@bucherhydraulics.com **www.bucherhydraulics.com**

© 2025 by Bucher Hydraulics AG Frutigen, 3714 Frutigen, Switzerland

All rights reserved.
Data is provided for the purpose of product description only, and must not be construed as warranted characteristics in the legal sense. The information does not relieve users from the duty of conducting their own evaluations and tests. Because the products are subject to continual improvement, we reserve the right to amend the product specifications contained in this catalogue.

BUCHER hydraulics

WWW.SUMY.IR

Directional valve 4-way/2-position

Q_{max} = 15 l/min, p_{max} = 420 bar
direct acting, spool type, switching solenoid with emergency override
Type series: WKP42ANA3...

- Screw-in cartridge valve
- For cavity AN
- All external parts with zinc-nickel coating according to DIN EN ISO 19598
- Installation in threaded port body type GANA
- The slip-on coil can be rotated, and it can be replaced without opening the hydraulic envelope
- High pressure wet-armature solenoids
- Various plug-connector systems and voltages are available
- Can be used as a high-pressure pilot valve
- With manual override

Description

The 4-way/2-position solenoid operated spool valves, series WKP42..., are size 3, direct acting, pressure balanced screw-in valves with a 3/4-16 UNF-2A mounting thread. They are designed on the proven sliding-spool principle. The straightforward design delivers an outstanding price/performance ratio. All external parts of the screw-in valves are zinc-nickel plated, and are thus suitable for use in the harshest operating environments. The slip-on coils can be replaced without opening the hydraulic envelope and can be positioned at any angle through 360°. These valves are primarily used in mobile and industrial applications as pilot valves for controlling the travel direction of actuators such as hydraulic motors and cylinders. For self-assembly, please refer to the section related data sheets.

Symbol

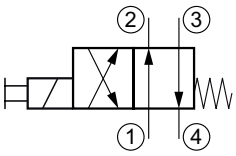

Technical Data

General Characteristics	Description, value, unit
Function group	Directional valve
Function	4-way/2-position
Design	Screw-in cartridge valve
Controls	switching solenoid with emergency override
Characteristic	direct acting, spool type
Construction size	nominal size 3
Thread size	3/4-16 UNF-2A
Mounting attitude	unrestricted
Weight	0.48 kg
Cavity acc. factory standard	For cavity AN
Tightening torque steel	60 Nm
Tightening torque aluminium	60 Nm
Tightening torque tolerance	± 10 %
Minimum ambient temperature	- 25 °C
Maximum ambient temperature	+ 50 °C
Surface protection	All external parts with zinc-nickel coating according to DIN EN ISO 19598
Available seal types	several seal types available, see ordering code
Seal kit order number	NBR: DS-248-N / FKM: DS-248-V

Hydraulic Characteristics	Description, value, unit
Maximum operating pressure	420 bar
Restriction of the operating pressure	at port 4 max. 250 bar
Maximum flow rate	15 l/min
Flow direction	see symbol
Hydraulic fluid	HL and HLP mineral oil according to DIN 51 524; other fluids on request!
Minimum fluid temperature	- 25 °C
Maximum fluid temperature	+ 80 °C
Viscosity range	10 ... 500 mm^2/s (cSt)
Recommended viscosity range	15 ... 250 mm^2/s (cSt)
Minimum fluid cleanliness (cleanlineless class according to ISO 4406:1999)	class 20/18/15

Electric Characteristics	Description, value, unit
Actuator type	solenoid coil
Solenoid coils type	D36
Supply voltage DC	12/24 V DC
Supply voltage AC	115/230 V AC (50 ... 60 Hz)
Supply voltage tolerance	± 10 %
Maximum permissible power consumption	V DC = 27 W / V AC = 25 W
Relative duty cycle	100 %
Electrical connection coil	several connection types available, see ordering code
Protection class solenoid coil to ISO 20 653 / EN 60 529	several classes of protection available, see ordering code (with appropriate mating connector and proper fitting and sealing)

Performance graphs

measured with oil viscosity 33.0 mm²/s (cSt), coil at steady-state temperature and 10 % undervoltage

p = f (Q) Performance limit

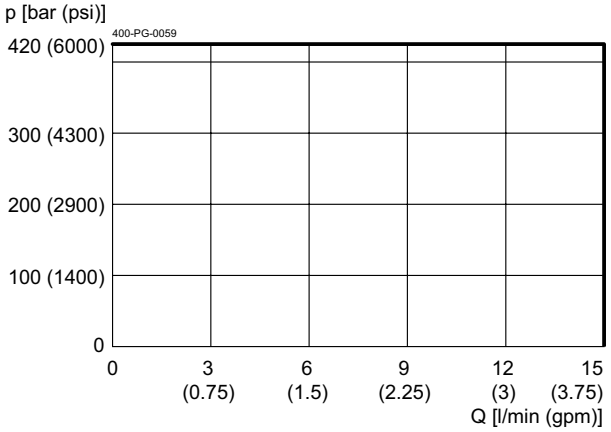

Δp = f (Q) Pressure drop-flow rate characteristic

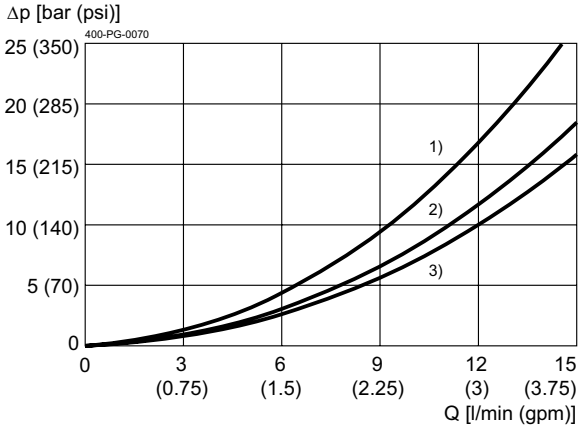

1) 2 → 4 / 3 → 4
2) 1 → 3
3) 1 → 2

Dimensions and sectional view

Beispiel für die Masseinheit:
Example for the dimensional units:

0.79 = 0.79 mm millimeter
(.031) = 0.031" inch

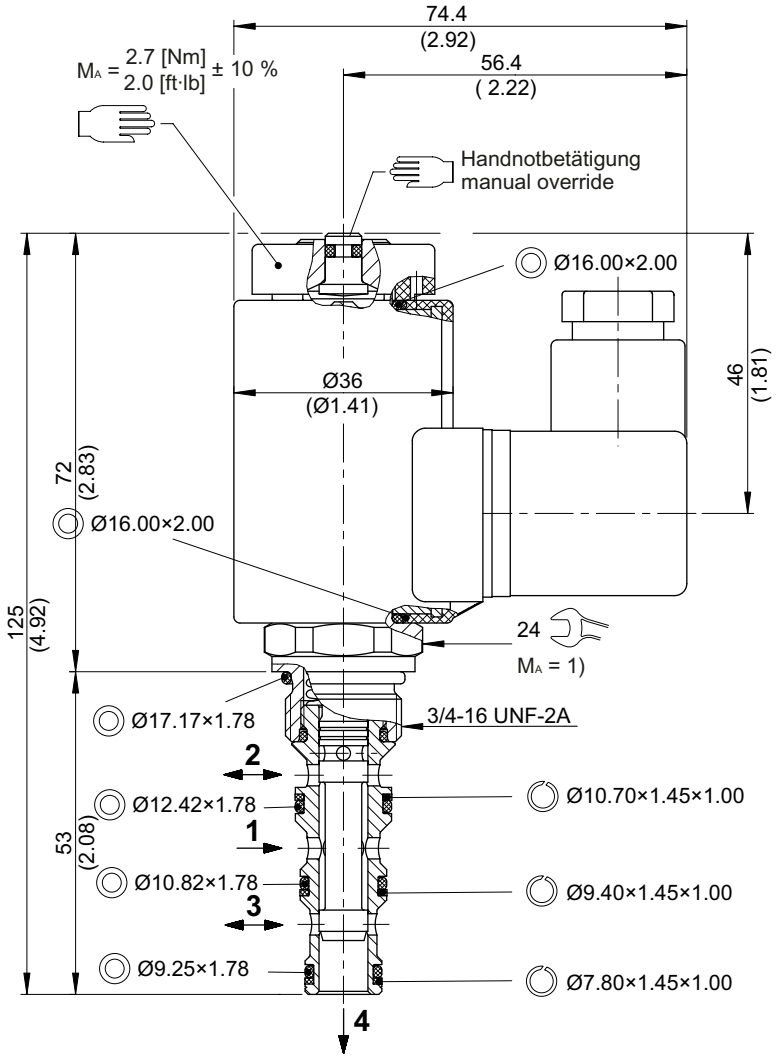

Installation information

NOTE!
1) When fitting the screw-in cartridge valve, use the specified tightening torque. The value can be found in the chapter "technical data".

NOTE!
The seals are not available individually. The seal kit order number can be found in the chapter "Technical data".

ATTENTION!
Only qualified personnel with mechanical skills may carry out any maintenance work. Generally, the only work that should ever be undertaken is to check, and possibly replace, the seals. When changing seals, oil or grease the new seals thoroughly before fitting them.

Ordering code

Ex. W K P 42A N A 3 _ - 2 24 D _

W	=	directional valve
K	=	spool-type, direct acting
P	=	high-pressure version (420 bar)
42A	=	4-way/2-position with spool type "A"
N	=	electrically operated, V DC = 27 W / V AC = 25 W
A ... Q	=	standard model according to valid data sheet *(standard)*
Z ... R	=	special model after consultation
3	=	nominal size 3 (preferably as pilot valve)
(blank)	=	NBR (nitril-butadien-rubber / BUNA) seals *(standard)*
V	=	FKM (fluorocarbon rubber / VITON) seals *(special seals - please consult BUCHER)*
1 ... 9	=	technical design no. (omit when ordering)
...	=	voltage e.g. 24 (24 V)
D	=	current DC
A	=	current AC
(blank)	=	DIN EN 175301-803 connection, 3-pole 2 P+E with mating plug, IP 65 *(standard)*
M100	=	DIN EN 175301-803 connection, 3-pole 2 P+E
C	=	Kostal plug connection (IP 65)
JT	=	Junior Timer radial plug connection (with protection diode, IP 65)
IT	=	Junior Timer axial plug connection (with protection diode, IP 65)
D	=	Deutsch plug connection DT04-2P (IP 67/69K)
DT	=	Deutsch plug connection DT04-2P (with protection diode, IP 67/69K)
S	=	AMP Superseal 1.5 (IP 67) / Metri-Pack 150 (IP 65) plug connection
F	=	flying leads (500 mm)

mating plug not supplied

Related data sheets

Reference	Description
400-P-040011	Forming tools
400-P-040191	Cavity AN
400-P-720121	Threaded port body GANA
400-P-120110	Solenoid coil D36

info.ch@bucherhydraulics.com
www.bucherhydraulics.com

© 2021 by Bucher Hydraulics AG Frutigen, 3714 Frutigen, Switzerland

All rights reserved.
Data is provided for the purpose of product description only, and must not be construed as warranted characteristics in the legal sense. The information does not relieve users from the duty of conducting their own evaluations and tests. Because the products are subject to continual improvement, we reserve the right to amend the product specifications contained in this catalogue.

BUCHER hydraulics

WWW.SUMY.IR

Directional valve 4-way/2-position

Q_{max} = 25 l/min, p_{max} = 350 bar
Direct acting, spool type, switching solenoid
Type series: WKDP42A-8T...

- Screw-in cartridge valve for cavity AT/C1040
- All external parts with zinc-nickel plating according to DIN EN ISO 19598
- Installation in threaded port body type GAT-12
- Reliable switching, even after long dwell times
- Optional with manual override
- Different spool options (center position)
- Various plug-connector systems and voltages are available
- High pressure wet-armature solenoids
- The slip-on coil can be rotated, and it can be replaced without opening the hydraulic envelope

Symbol

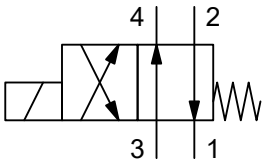

Description

The directional control valves, series WKDP42A-8T-..., are size 8 / SAE 10, screw-in cartridge valves with a seated pilot stage and an 7/8-14 UNF-2A mounting thread. They are designed on the proven sliding-spool principle. These screw-in valves are mainly used in mobile and stationary applications for the pilot or directional control of consumers such as hydraulic motors and hydraulic cylinders. The slip-on coils can be replaced without opening the hydraulic envelope and can be positioned at any angle through 360°. All external parts of the screw-in valves are zinc-nickel plated and are thus suitable for use in the harshest operating environments. For installation and further information, please refer to the section related data sheets.

Technical data

General characteristics	Description, value, unit
Function group	directional valve
Function	4-way/2-position
Design	screw-in cartridge valve
Controls	switching solenoid
Characteristic	direct acting, spool type
MTTFd value	150 years
Construction size	NG 8 / SAE 10
Thread size	7/8-14 UNF-2A
Mounting attitude	unrestricted
Weight	0.63 kg
Cavity acc. factory standard	AT/C1040
Tightening torque steel	80 Nm
Tightening torque aluminium	80 Nm
Tightening torque tolerance	± 10 %
Minimum ambient temperature	- 30 °C
Maximum ambient temperature	+ 50 °C
Surface protection	all external parts with zinc-nickel plating according to DIN EN ISO 19598
Sealing material	see ordering code

Hydraulic characteristics	Description, value, unit
Maximum operating pressure	350 bar
Maximum flow rate	25 l/min
Flow direction	see symbol
Hydraulic fluid	HL and HLP mineral oil according to DIN 51 524; other fluids on request!
Minimum fluid temperature	- 30 °C
Maximum fluid temperature	+ 80 °C
Viscosity range	10 ... 500 mm^2/s (cSt)
Recommended viscosity range	15 ... 250 mm^2/s (cSt)
Minimum fluid cleanliness (cleanlineless class according to ISO 4406:1999)	class 20/18/15

WWW.SUMY.IR

Electric characteristics	Description, value, unit
Actuator type	solenoid coil
Solenoid coils type	36X48/16.1
Supply voltage DC	12/24 V DC
Supply voltage tolerance	± 10 %
Nominal power consumption	19 W
Switching time	Switching time measured at: UN: Δp = 200 bar; Q = 24 l/min; TAmbient = 20 °C; ϑ = 46 mm2/s 30 ms (energizing) 130 ms (de-energizing)
Relative duty cycle	100 %
Electrical connection coil	several connection types available, see ordering code
Protection class solenoid coil to ISO 20 653 / EN 60 529	several classes of protection available, see ordering code (with appropriate mating connector and proper fitting and sealing)

NOTE!
The switching time can be strongly dependent on flow rate, pressure, oil viscosity and the dwell time under pressure. In practice, the switching time may therefore deviate from the specified value range.

Performance graphs

measured with oil viscosity 33.0 mm²/s (cSt), coil at steady-state temperature and 10 % undervoltage

p = f (Q) Performance limit

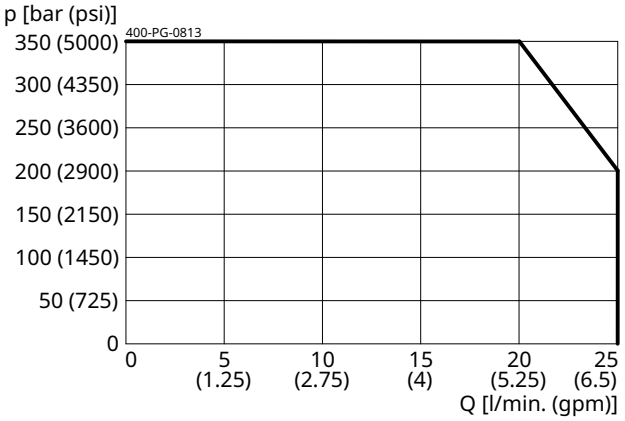

Δp = f (Q) Pressure drop-flow rate characteristic

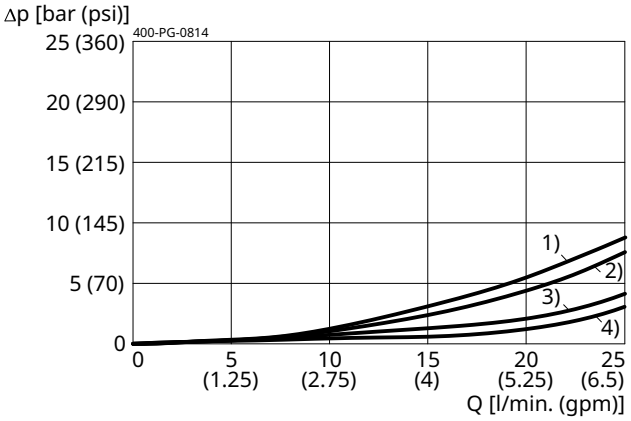

1) 1 → 4
2) 4 → 1
3) 1 → 2 / 2 ↔ 3
4) 2 → 1 / 3 ↔ 4

Installation

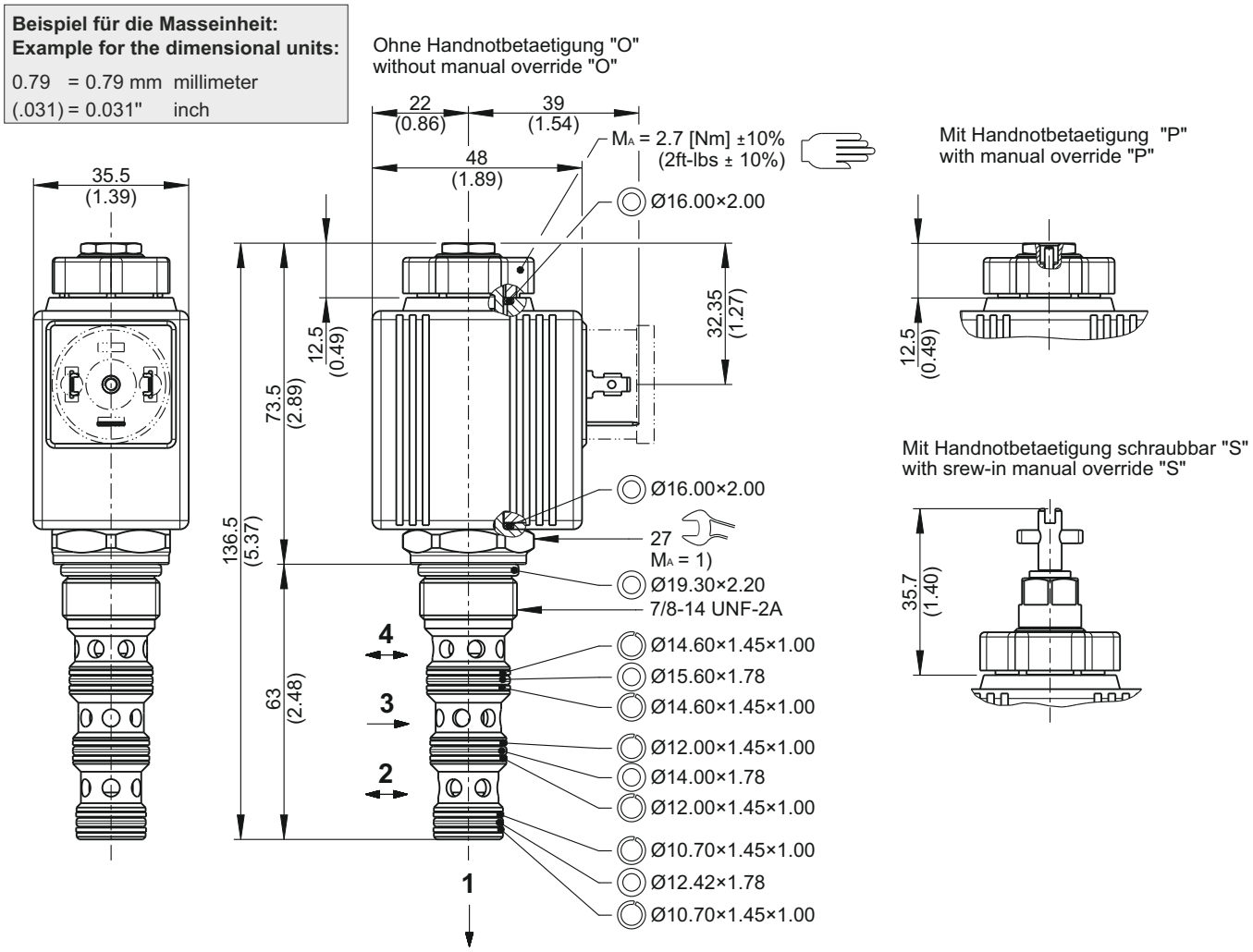

IMPORTANT!
1) When fitting the screw-in cartridge valve, use the specified tightening torque. The value can be found in the chapter "Technical data".

ATTENTION!
Only qualified personnel with mechanical skills may carry out any maintenance work. Generally, the only work that should ever be undertaken is to check, and possibly replace, the seals. When changing seals, oil or grease the new seals thoroughly before fitting them.

NOTE!
The seals are not available individually. The seal kit order number can be found in the chapter "Technical data".

Ordering code

Ex. W K D P 42A - 8 T - O - N A 1 24 D G _

W	=	directional valve
K	=	spool-type
D	=	direct acting
P	=	electrically operated, COIL 36X48, 19 W
42A	=	4-way/2-position, spooltype A
8	=	nominal size 8 / SAE 10
T	=	cavity type AT/C1040
O	=	without manual override
P	=	with manual override
S	=	with screwable manual override
N	=	NBR (nitril-butadien-rubber / BUNA) seals **(standard)**
V	=	FKM (fluorocarbon rubber / VITON) seals (special seals on request)
A ... Q	=	standard model according to valid data sheet
Z ... R	=	special model (on request)
1 ... 9	=	technical design no. (omit by ordering)
...	=	voltage e.g. 24 (24 V)
D	=	current DC
G	=	DIN EN 175301-803 connection, 3-pole 2 P+E **(standard)**, (IP 65)
GR	=	DIN EN 175301-803 connection, 3-pole 2 P+E, with protection diode, (IP 65)
J	=	Junior Timer plug connection, 2-pole radial, (IP 65)
JR	=	Junior Timer plug connection, 2-pole radial, with protection diode, (IP 65)
U	=	Deutsch plug connection DT04-2P, 2-pole radial, (IP 67/69K)
UR	=	Deutsch plug connection DT04-2P, 2-pole radial, with protection diode, (IP 67/69K)
		other plug-variants, please consult BUCHER.
(blank)	=	connection without mating plug **(standard)**
Q	=	only connection “G“ and “GR“ with mating plug

mating plug not supplied

IMPORTANT!
Not every combination of voltage values and plug connections available.

Related data sheets

Reference	Description
400-P-040011	form tools
400-P-040301	cavity AT/C1040
400-P-738131	threaded port body GAT-12-...
400-P-120112	solenoid coil 36X48/16.1
400-P-010101	MTTFd Values for Hydraulic Valves

info.ch@bucherhydraulics.com **www.bucherhydraulics.com**

© 2026 by Bucher Hydraulics AG Frutigen, 3714 Frutigen, Switzerland

All rights reserved.
Data is provided for the purpose of product description only, and must not be construed as warranted characteristics in the legal sense. The information does not relieve users from the duty of conducting their own evaluations and tests. Because the products are subject to continual improvement, we reserve the right to amend the product specifications contained in this catalogue.

BUCHER hydraulics

WWW.SUMY.IR

Directional valve 4-way/3-position

Q_{max} = 30 l/min, p_{max} = 250 bar
direct acting, spool type, switching solenoid
Type series: WK43D_A5...

- Screw-in cartridge valve
- For cavity AN
- All external parts with zinc-nickel plating according to DIN EN ISO 19598
- Installation in threaded port body type GANA
- Low head loss
- The slip-on coil can be rotated, and it can be replaced without opening the hydraulic envelope
- Various plug-connector systems and voltages are available
- High pressure wet-armature solenoids

Description

The 4-way/3-position solenoid operated spool valves, series WK43..., are size 5, direct acting, pressure balanced screw-in valves with a 3/4-16 UNF mounting thread. They are designed based on the sliding-spool principle. The straightforward design delivers an outstanding price/performance ratio and excellent pressure-drop/flow rate values. All external parts of the screw-in valves are zinc-nickel plated and are thus suitable for use in the harshest operating environments. The slip-on coils can be replaced without opening the hydraulic envelope and can be positioned at any angle through 360°. These valves are mainly used in mobile and industrial applications as pilot valves for controlling the travel direction of actuators such as hydraulic motors and cylinders. For self-assembly, please refer to the section related data sheets.

Symbol

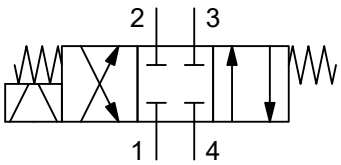

Technical data

General characteristics	Description, value, unit
Function group	Directional valve
Function	4-way/3-position
Design	Screw-in cartridge valve
Controls	switching solenoid
Characteristic	direct acting, spool type
MTTFd value	150 years
Construction size	NG 5
Thread size	3/4-16 UNF-2A
Mounting attitude	unrestricted
Weight	0.64 kg
Cavity acc. factory standard	For cavity AN
Tightening torque steel	40 Nm
Tightening torque aluminium	40 Nm
Tightening torque tolerance	± 10 %
Minimum ambient temperature	- 25 °C
Maximum ambient temperature	+ 50 °C
Surface protection	All external parts with zinc-nickel plating according to DIN EN ISO 19598
Sealing material	see ordering code
Seal kit order number	NBR: DS-248-N / FKM: DS-248-V

Hydraulic characteristics	Description, value, unit
Maximum operating pressure	250 bar
Maximum flow rate	30 l/min
Flow direction	see symbol
Hydraulic fluid	HL and HLP mineral oil according to DIN 51 524; other fluids on request!
Minimum fluid temperature	- 25 °C
Maximum fluid temperature	+ 80 °C
Viscosity range	10 ... 500 mm^2/s (cSt)
Recommended viscosity range	15 ... 250 mm^2/s (cSt)
Minimum fluid cleanliness (cleanlineless class according to ISO 4406:1999)	class 20/18/15

Electric characteristics	Description, value, unit
Actuator type	solenoid coil
Solenoid coils type	D36
Supply voltage DC	12/24 V DC
Supply voltage AC	115/230 (50 ... 60 Hz) V AC
Supply voltage tolerance	± 10 %
Nominal power consumption	Version "E" V DC = 17 W / V AC = 17 W Version "N": V DC = 27 W / V AC = 25 W
Switching time	Version "E": 45...100 ms (energized) / 15...50 (de-energized) Version "N": 40...100 ms (energized) / 30...50 (de-energized)

WWW.SUMY.IR

Electric characteristics	Description, value, unit
Relative duty cycle	100 %
Electrical connection coil	several connection types available, see ordering code
Protection class solenoid coil to ISO 20 653 / EN 60 529	several classes of protection available, see ordering code (with appropriate mating connector and proper fitting and sealing)

NOTE!
The switching time can be strongly dependent on flow rate, pressure, oil viscosity and the dwell time under pressure. In practice, the switching time may therefore deviate from the specified value range.

Performance graphs

measured with oil viscosity 33.0 mm²/s (cSt), coil at steady-state temperature and 10 % undervoltage

p = f (Q) Performance limit

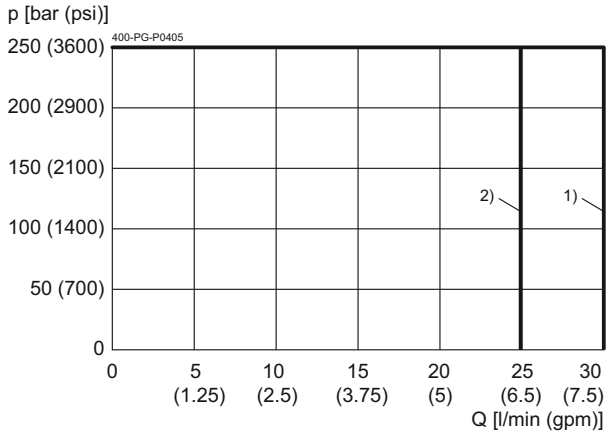

1) Version "N"
2) Version "E"

Δp = f (Q) Pressure drop-flow rate characteristic

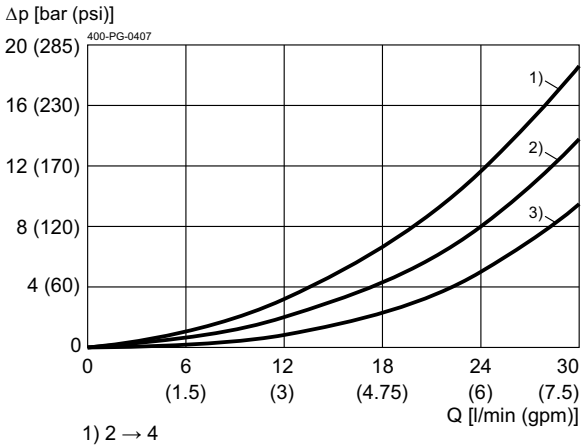

1) 2 → 4
2) 1 → 2 / 1 → 3
3) 3 → 4

Dimensions and sectional view

Beispiel für die Masseinheit:
Example for the dimensional units:

0.79 = 0.79 mm millimeter
(.031) = 0.031" inch

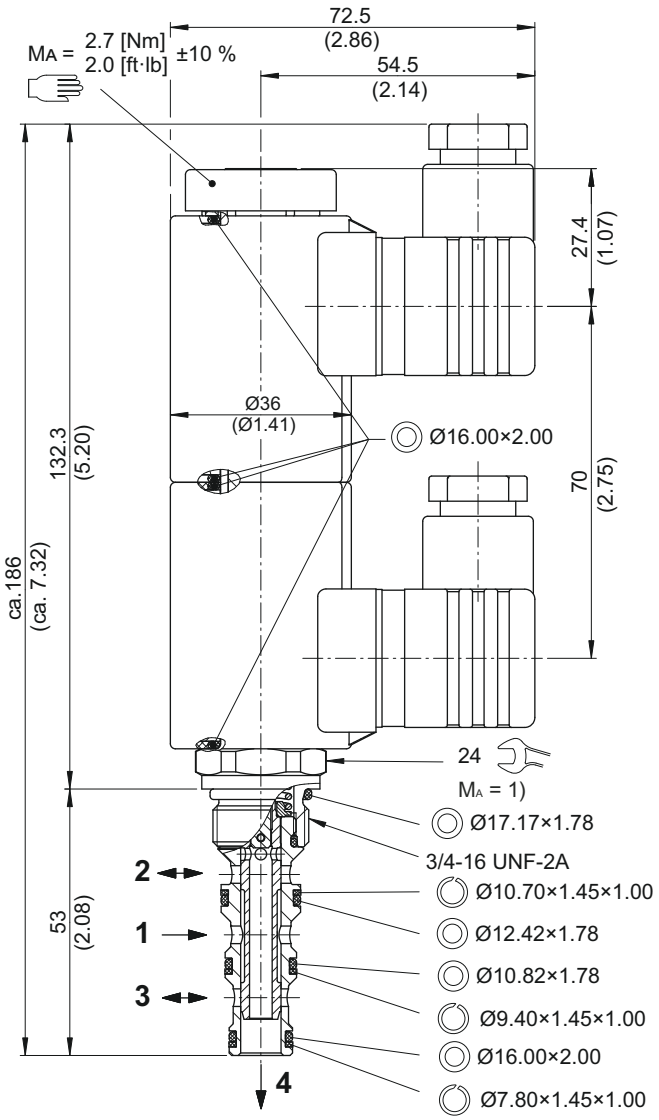

Installation information

NOTE!
1) When fitting the screw-in cartridge valve, use the specified tightening torque. The value can be found in the chapter "Technical data".

ATTENTION!
Only qualified personnel with mechanical skills may carry out any maintenance work. Generally, the only work that should ever be undertaken is to check, and possibly replace, the seals. When changing seals, oil or grease the new seals thoroughly before fitting them.

NOTE!
The seals are not available individually. The seal kit order number can be found in the chapter "Technical data".

Ordering code

Ex. W | K | 43D | N | A | 5 | _ | - | 1 | 24 | D | _

W	=	directional valve
K	=	spool-type, direct acting
43D	=	4-way/3-position with spool type "D"
N	=	electrically operated, V DC = 27 W / V AC = 25 W
E	=	electrically operated, V DC = 17 W / V AC = 17 W
A ... Q	=	standard model according to valid data sheet *(standard)*
Z ... R	=	special model after consultation
5	=	nominal size 5
(blank)	=	NBR (nitril-butadien-rubber / BUNA) seals *(standard)*
V	=	FKM (fluorocarbon rubber / VITON) seals *(special seals - please consult BUCHER)*
1 ... 9	=	technical design no. (omit when ordering)
...	=	voltage e.g. 24 (24 V)
D	=	current DC
A	=	current AC
(blank)	=	DIN EN 175301-803 connection, 3-pole 2 P+E with mating plug, IP 65 *(standard)*
M100	=	DIN EN 175301-803 connection, 3-pole 2 P+E
C	=	Kostal plug connection (IP 65)
JT	=	Junior Timer radial plug connection (with protection diode, IP 65)
IT	=	Junior Timer axial plug connection (with protection diode, IP 65)
D	=	Deutsch plug connection DT04-2P (IP 67/69K)
DT	=	Deutsch plug connection DT04-2P (with protection diode, IP 67/69K)
S	=	AMP Superseal 1.5 (IP 67) / Metri-Pack 150 (IP 65) plug connection
F	=	flying leads (500 mm)

mating plug not supplied

Related data sheets

Reference	Description
400-P-040011	Form tools
400-P-040191	Cavity AN
400-P-720121	Threaded port body GANA
400-P-120110	Solenoid coil D36
400-P-010101	MTTFd Values for Hydraulic Valves

info.ch@bucherhydraulics.com **www.bucherhydraulics.com**

© 2025 by Bucher Hydraulics AG Frutigen, 3714 Frutigen, Switzerland

All rights reserved.
Data is provided for the purpose of product description only, and must not be construed as warranted characteristics in the legal sense. The information does not relieve users from the duty of conducting their own evaluations and tests. Because the products are subject to continual improvement, we reserve the right to amend the product specifications contained in this catalogue.

BUCHER hydraulics

WWW.SUMY.IR

Directional valve 4-way/3-position

Q_{max} = 22 l/min, p_{max} = 250 bar
direct acting, spool type, switching solenoid
Type series: WK43G_A5...

- Screw-in cartridge valve
- For cavity AN
- All external parts with zinc-nickel coating according to DIN EN ISO 19598
- Installation in threaded port body type GANA
- The slip-on coil can be rotated, and it can be replaced without opening the hydraulic envelope
- Low head loss
- High pressure wet-armature solenoids
- Various plug-connector systems and voltages are available

Description

The 4-way/3-position solenoid operated spool valves, series WK43..., are size 5, direct acting, pressure balanced screw-in valves with a 3/4-16 UNF-2A mounting thread. They are designed based on the sliding-spool principle. The straightforward design delivers an outstanding price/performance ratio and excellent pressure-drop/flow rate values. All external parts of the screw-in valves are zinc-nickel plated, and are thus suitable for use in the harshest operating environments. The slip-on coils can be replaced without opening the hydraulic envelope and can be positioned at any angle through 360°. These valves are mainly used in mobile and industrial applications as pilot valves for controlling the travel direction of actuators such as hydraulic motors and cylinders. For self-assembly, please refer to the section related data sheets.

Symbol

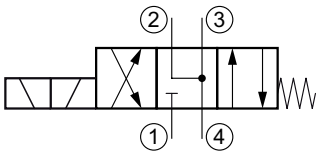

Technical Data

General Characteristics	Description, value, unit
Function group	Directional valve
Function	4-way/3-position
Design	Screw-in cartridge valve
Controls	switching solenoid
Characteristic	direct acting, spool type
MTTFd value	150 years
Construction size	nominal size 5
Thread size	3/4-16 UNF-2A
Mounting attitude	unrestricted
Weight	0.64 kg
Cavity acc. factory standard	For cavity AN
Tightening torque steel	40 Nm
Tightening torque aluminium	40 Nm
Tightening torque tolerance	± 10 %
Minimum ambient temperature	- 25 °C
Maximum ambient temperature	+ 50 °C
Surface protection	All external parts with zinc-nickel coating according to DIN EN ISO 19598
Available seal types	several seal types available, see ordering code
Seal kit order number	NBR: DS-248-N / FKM: DS-248-V

Hydraulic Characteristics	Description, value, unit
Maximum operating pressure	250 bar
Maximum flow rate	22 l/min
Flow direction	see symbol
Hydraulic fluid	HL and HLP mineral oil according to DIN 51 524; other fluids on request!
Minimum fluid temperature	- 25 °C
Maximum fluid temperature	+ 80 °C
Viscosity range	10 ... 500 mm^2/s (cSt)
Recommended viscosity range	15 ... 250 mm^2/s (cSt)
Minimum fluid cleanliness (cleanlineless class according to ISO 4406:1999)	class 20/18/15

Electric Characteristics	Description, value, unit
Actuator type	solenoid coil
Solenoid coils type	D36
Supply voltage DC	12/24 V DC
Supply voltage AC	115/230 V AC (50 ... 60 Hz)
Supply voltage tolerance	± 10 %
Maximum permissible power consumption	Version "E": V DC = 17 W / V AC = 17 W Version "N": V DC = 27 W / V AC = 25 W
Switching time	Version "E": 50...100 ms (energized) / 40...60 ms (de-energized) Version "N": 50...180 ms (energized) / 30...65 ms (de-energized)

Electric Characteristics	Description, value, unit
Relative duty cycle	100 %
Electrical connection coil	several connection types available, see ordering code
Protection class solenoid coil to ISO 20 653 / EN 60 529	several classes of protection available, see ordering code (with appropriate mating connector and proper fitting and sealing)

NOTE!
The switching time can be strongly dependent on flow rate, pressure, oil viscosity and the dwell time under pressure. In practice, the switching time may therefore deviate from the specified value range.

Performance graphs

measured with oil viscosity 33.0 mm²/s (cSt), coil at steady-state temperature and 10 % undervoltage

p = f (Q) Performance limit

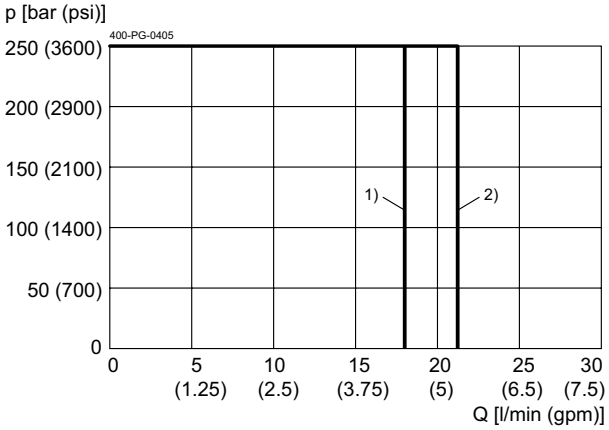

1) Version "E"
2) Version "N"

Δp = f (Q) Pressure drop-flow rate characteristic

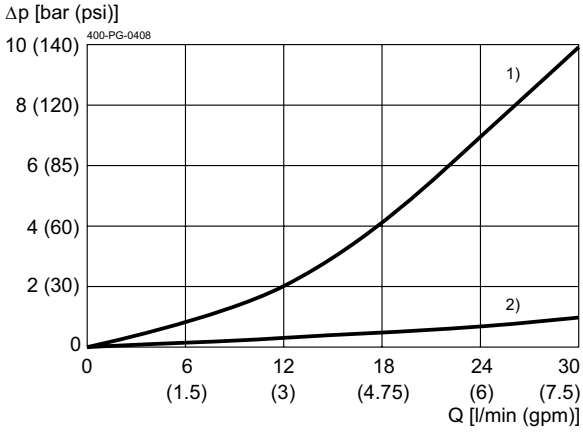

1) 1 → 2 / 1 → 3 / 2 → 4
2) 3 → 4

Dimensions and sectional view

Beispiel für die Masseinheit:
Example for the dimensional units:

0.79 = 0.79 mm millimeter
(.031) = 0.031" inch

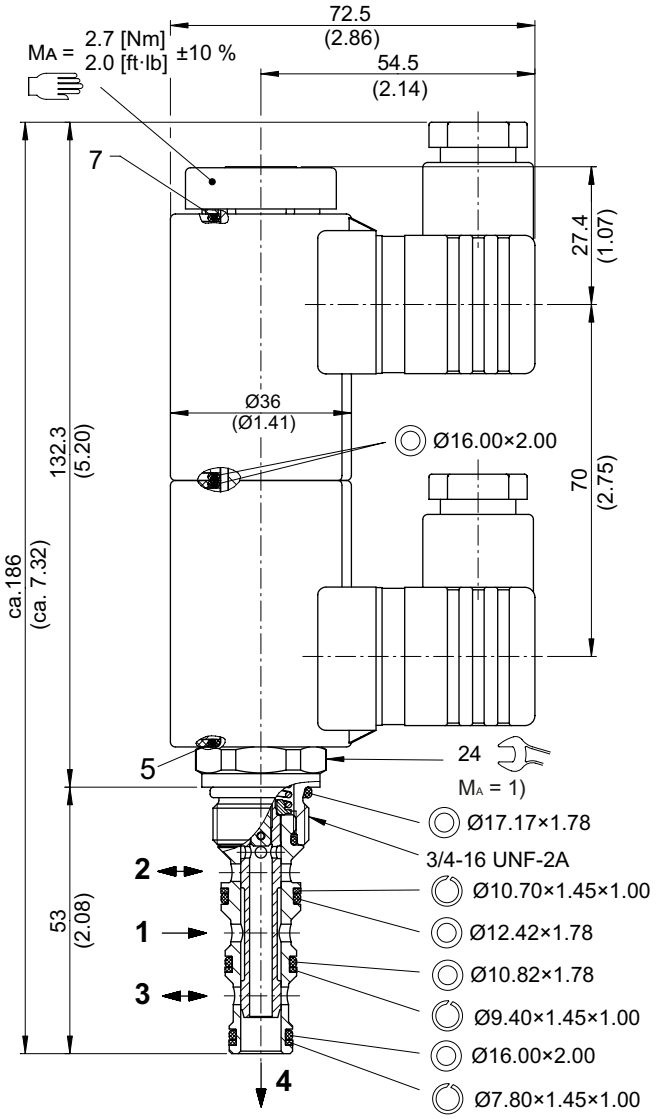

Installation information

NOTE!
1) When fitting the screw-in cartridge valve, use the specified tightening torque. The value can be found in the chapter "technical data".

NOTE!
The seals are not available individually. The seal kit order number can be found in the chapter "Technical data".

ATTENTION!
Only qualified personnel with mechanical skills may carry out any maintenance work. Generally, the only work that should ever be undertaken is to check, and possibly replace, the seals. When changing seals, oil or grease the new seals thoroughly before fitting them.

Ordering code

Ex. W K 43G N A 5 _ - 1 24 D _

W	=	directional valve
K	=	spool-type, direct acting
43G	=	4-way/3-position with spool type "G"
N	=	electrically operated, V DC = 27 W / V AC = 25 W
E	=	electrically operated, V DC = 17 W / V AC = 17 W
A ... Q	=	standard model according to valid data sheet *(standard)*
Z ... R	=	special model after consultation
5	=	nominal size 5
(blank)	=	NBR (nitril-butadien-rubber / BUNA) seals *(standard)*
V	=	FKM (fluorocarbon rubber / VITON) seals *(special seals - please consult BUCHER)*
1 ... 9	=	technical design no. (omit when ordering)
...	=	voltage e.g. 24 (24 V)
D	=	current DC
A	=	current AC
(blank)	=	DIN EN 175301-803 connection, 3-pole 2 P+E with mating plug, IP 65 *(standard)*
M100	=	DIN EN 175301-803 connection, 3-pole 2 P+E
C	=	Kostal plug connection (IP 65)
JT	=	Junior Timer radial plug connection (with protection diode, IP 65)
IT	=	Junior Timer axial plug connection (with protection diode, IP 65)
D	=	Deutsch plug connection DT04-2P (IP 67/69K)
DT	=	Deutsch plug connection DT04-2P (with protection diode, IP 67/69K)
S	=	AMP Superseal 1.5 (IP 67) / Metri-Pack 150 (IP 65) plug connection
F	=	flying leads (500 mm)

mating plug not supplied

Related data sheets

Reference	Description
400-P-040011	Forming tools
400-P-040191	Cavity AN
400-P-720121	Threaded port body GANA
400-P-120110	Solenoid coil D36
400-P-010101	MTTFD Values for Hydraulic Valves

info.ch@bucherhydraulics.com **www.bucherhydraulics.com**

© 2021 by Bucher Hydraulics AG Frutigen, 3714 Frutigen, Switzerland

All rights reserved.
Data is provided for the purpose of product description only, and must not be construed as warranted characteristics in the legal sense. The information does not relieve users from the duty of conducting their own evaluations and tests. Because the products are subject to continual improvement, we reserve the right to amend the product specifications contained in this catalogue.

BUCHER hydraulics

SOLENOID VALVE, 4–WAY, 3–POSITION. DIRECT ACTING SPOOL

WWW.SUMY.IR

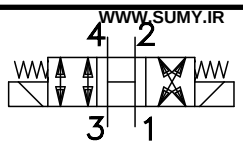

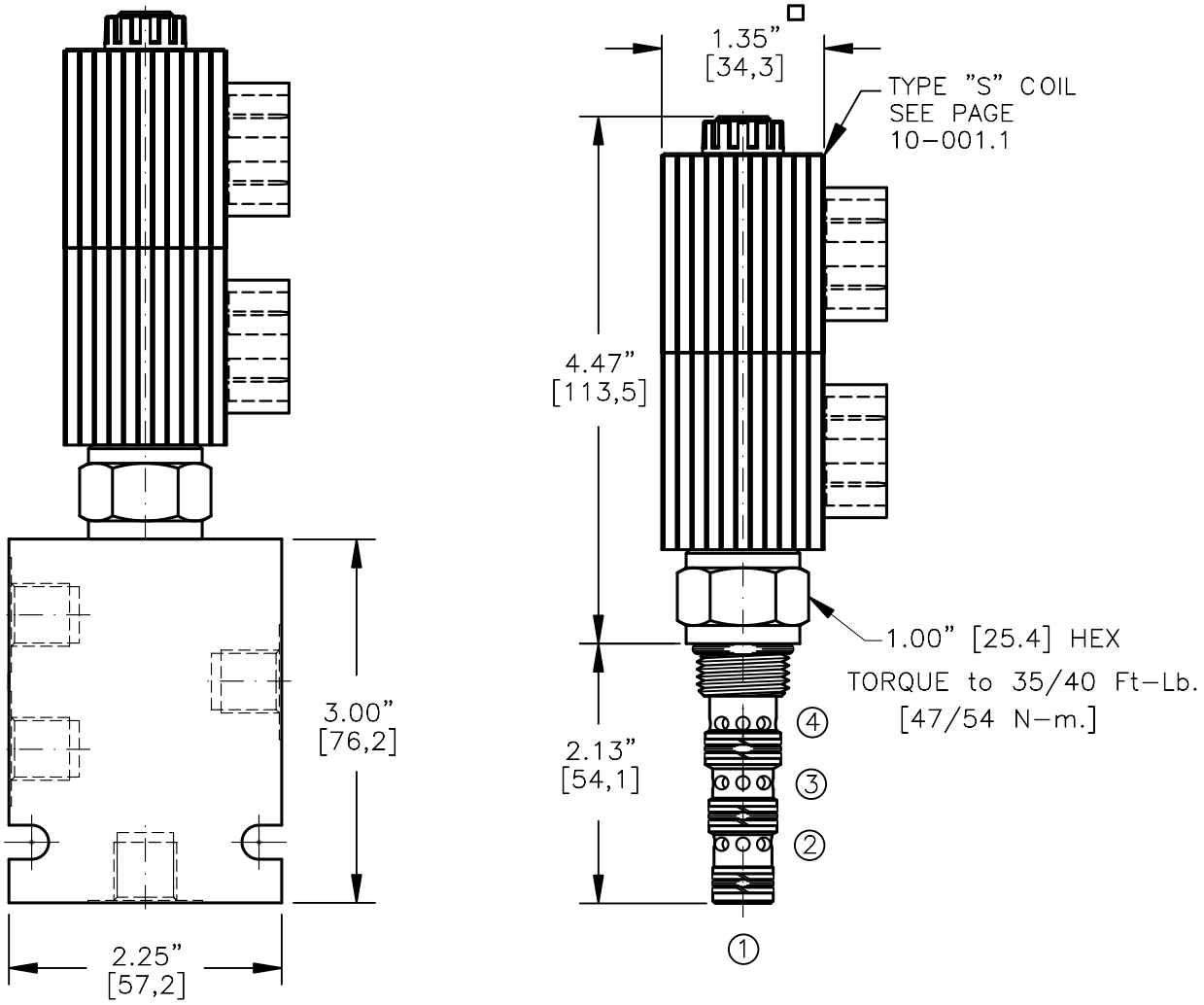

TORQUE:

Steel = 35/40 Ft–Lb. [47/54 Nm]
Aluminum = 25/30 Ft–Lb. [34/41 Nm]

EMBV–08–X–4K–X–XXX X

BASIC

SIZE
08 = 3/4"–16UNF

SEALS
N = BUNA "N"
V = VITON

TYPE
4K = "K" SPOOL
4–WAY, 3–POSITION

PORTS
0 = CARTRIDGE ONLY
02BX = G 1/4" BSSP
06TX = SAE – #6
"A" = ALUM. HOUSING
"S" = STEEL HOUSING

VOLTAGE AMPS
12D = 12 VDC 1.7
24D = 24 VDC .9
36D = 36 VDC .6
48D = 48 VDC .5
115D = 115 VDC .2

TERMINALS
L =18GA. 24" LEADS
T =SPADE TERM.
B =BOLT TERM.
G =DIN43650
W =WEATHER–PACK
D =DEUTSCH–DT04–2P
M =METRI–PACK CONN.

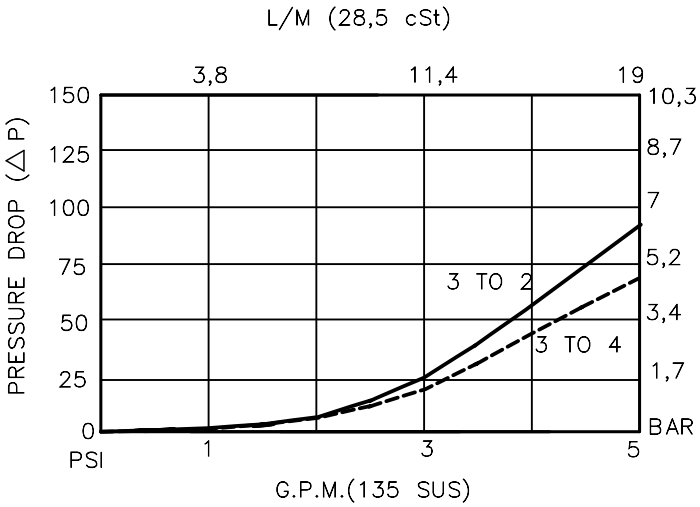

BUCHER hydraulics

WWW.SUMY.IR

SOLENOID VALVE 4–WAY, 3–POSITION, SPOOL TYPE.

DESCRIPTION

This unit is a FOUR–WAY, THREE POSITION, cartridge type, spool type, direct acting, screw in type, solenoid operated, double coil, bidirectional open center selector valve.

OPERATIONS

At the initial position, this valve allows flow between thru all ports.

When the upper solenoid coil is energized, the spool in this valve is shifted and allows flow between ports 1 and 2 and ports 3 and 4.

When the lower solenoid coil is energized, the spool in this valve is shifted and allows flow between ports 1 and 4 and ports 2 and 3.

FEATURES AND BENEFITS

Continuous–duty, very low heat rise & waterproof solenoid coil.
Interchangeable solenoid coils & terminations options available.
Hardened precision fitted spool & sleeve provides reliable, long life.
Very efficient, wet–armature solenoid core tube construction.
All external carbon steel parts are plated for longer life against the elements.
All cartridge valves are 100% functionally tested.
Industry common cavity.

BUCHER hydraulics

WWW.SUMY.IR

SOLENOID VALVE 4–WAY, 3–POSITION, SPOOL TYPE.

SPECIFICATIONS

OPERATING PRESSURE: 5,000 PSI [350 Bar]
PROOF PRESSURE: 10,000 PSI [700 Bar]
FLOW: 5.0 GPM [19 l/m] max. See performance chart.
INTERNAL LEAKAGE: 10cu.in/min [164 cc/m] @ 5,000 PSI [350 Bar]
VALVE HOUSINGS: 2500 PSI [175 Bar] = Aluminum – Anodized.
5000 PSI [350 Bar] = Steel – Unplated.
OIL TEMPERATURE: –40° to +175° F. [–40° to +80° C.]
AMBIENT TEMPERATURE: –40° to +122° F. [–40° to +50° C.]
Please consult factory for continuously energized or high ambient temperature application (>122° F [50°C])
OPERATING MEDIA: All general purpose hydraulic fluids such as MIL–H–5606, SAE–#10, SAE–#20, etc.
RESPONSE TIME: First indication of change in pressure with 100% voltage supplied @ 80% of nominal flow rating.
* Pull–in: 50 ms
* Drop–Out: 50 ms
SEAL KIT: SKN–0842 Buna "N"
SKV–0842 Viton
WEIGHT: 1.52 lb [.69 kg] cartridge with coil only.
VALVE CAVITY: #C0840, See Page 0–041.0.

info.el@bucherhydraulics.com

www.bucherhydraulics.com/commoncavity

© 2015 by Bucher Hydraulics, Inc., 2545 Northwest Parkway, Elgin, Illinois 60124, USA
All rights reserved.
The technical information in this catalog, may contain calculated figures (for reference only) and not actual performance data for this product. Data is provided for the purpose of product description only, and must not be construed as warranted characteristics in the legal sense. The information does not relieve users from the duty of conducting their own evaluations and tests. Because the products are subject to continual improvement, we reserve the right to amend the product specifications contained in this catalogue.

BUCHER hydraulics

WWW.SUMY.IR

Directional valve 2-way/2-position

Q_{max} = 40 l/min, p_{max} = 350 bar
pilot operated, poppet type, switching solenoid
Type series: WR22L_A5-...

- Screw-in cartridge valve
- For cavity AL
- All external parts with zinc-nickel plating according to DIN EN ISO 19598
- Installation in threaded port body type GALA
- The slip-on coil can be rotated, and it can be replaced without opening the hydraulic envelope
- High pressure wet-armature solenoids
- Various plug-connector systems and voltages are available
- Seat tight shut-off
- Compact construction
- Minimal headloss
- Reliable switching, even after long dwell times

Description

The 2-way/2-position solenoid-operated directional seat valves, series WR22L_A..., are size 5, two stage, pressure balanced screw-in valves with a 3/4-16 UNF mounting thread. The main and pilot stages are both designed on the poppet/seat principle, and the 1 to 2 flow path is therefore virtually leak-free. This valve type is constructively designed for minimal head loss, thus the flow direction is possible only in one direction (1 to 2). The straightforward design delivers a good price/performance ratio and outstanding head loss/ flow ratings. All external parts of the screw-in valves are zinc-nickel plated and are thus suitable for use in the harshest operating environments. The slip-on coils can be replaced without opening the hydraulic envelope and can be positioned at any angle through 360°. These valves are primarily used as pilot valves in certain mobile and industrial applications where leak-tight shut-off functions are crucially important. Examples are where loads, tensions, or clamping forces must be held without leakage. For self-assembly, please refer to the section related data sheets.

Symbol

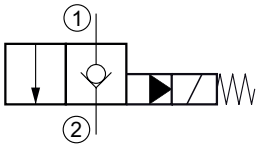

Technical data

General characteristics	Description, value, unit
Function group	Directional valve
Function	2-way/2-position
Design	Screw-in cartridge valve
Controls	switching solenoid
Characteristic	pilot operated, poppet type
Construction size	NG 5
Thread size	3/4-16 UNF-2A
Mounting attitude	unrestricted
Weight	0.40 kg
Cavity acc. factory standard	For cavity AL
Tightening torque steel	50 Nm
Tightening torque aluminium	50 Nm
Tightening torque tolerance	± 10 %
Minimum ambient temperature	- 25 °C
Maximum ambient temperature	+ 50 °C
Surface protection	All external parts with zinc-nickel plating according to DIN EN ISO 19598
Sealing material	see ordering code
Seal kit order number	NBR: DS-246-N / FKM: DS-246-V

Hydraulic characteristics	Description, value, unit
Maximum operating pressure	350 bar
Maximum flow rate	40 l/min
Flow direction	see symbol
Hydraulic fluid	HL and HLP mineral oil according to DIN 51 524; other fluids on request!
Minimum fluid temperature	- 25 °C
Maximum fluid temperature	+ 80 °C
Viscosity range	10 ... 500 mm^2/s (cSt)
Recommended viscosity range	15 ... 250 mm^2/s (cSt)
Minimum fluid cleanliness (cleanlineless class according to ISO 4406:1999)	class 20/18/15

ATTENTION!
Volume flow direction 2 to 1 not allowed.

NOTE!
The switching safety of the valve is achieved by the volume flow and pressure drop (Δp).

Electric characteristics	Description, value, unit
Actuator type	solenoid coil
Solenoid coils type	D36
Supply voltage DC	12/24 V DC
Supply voltage AC	115/230 (50 ... 60 Hz) V AC
Supply voltage tolerance	± 10 %
Maximum permissible power consumption	Version "E": V DC = 17 W / V AC = 17 W Version "N": V DC = 27 W / V AC = 25 W
Switching time	Version "E": 25...110 ms (energized) / 65...180 ms (de-energized) Version "N": 30...125 ms (energized) / 30...110 ms (de-energized)
Relative duty cycle	100 %
Electrical connection coil	several connection types available, see ordering code
Protection class solenoid coil to ISO 20 653 / EN 60 529	several classes of protection available, see ordering code (with appropriate mating connector and proper fitting and sealing)

NOTE!
The switching time can be strongly dependent on flow rate, pressure, oil viscosity and the dwell time under pressure. In practice, the switching time may therefore deviate from the specified value range.

Performance graphs

measured with oil viscosity 33.0 mm²/s (cSt), coil at steady-state temperature and 10 % undervoltage

p = f (Q) Performance limit

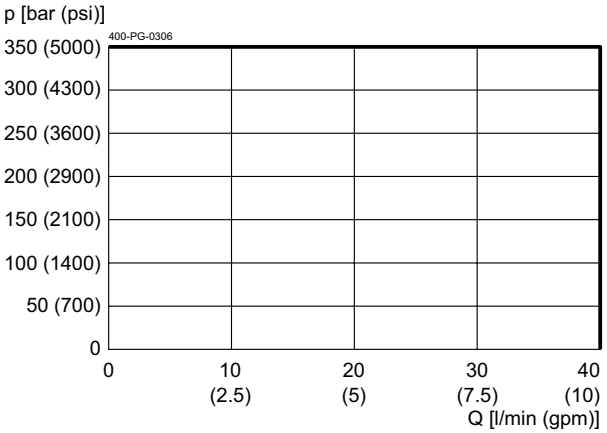

Δp = f (Q) Pressure drop-flow rate characteristic

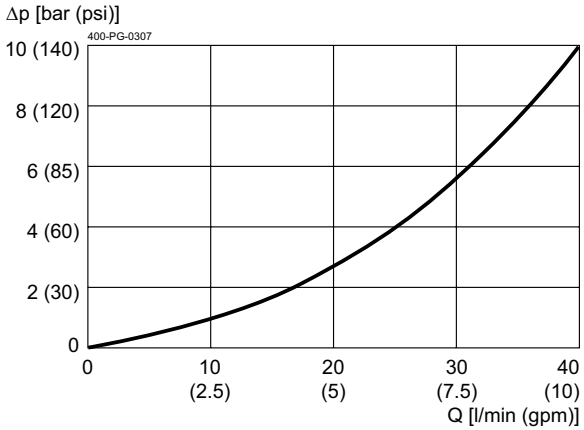

1 → 2, solenoid energising

Dimensions and sectional view

Beispiel für die Masseinheit:
Example for the dimensional units:

0.79 = 0.79 mm millimeter
(.031) = 0.031" inch

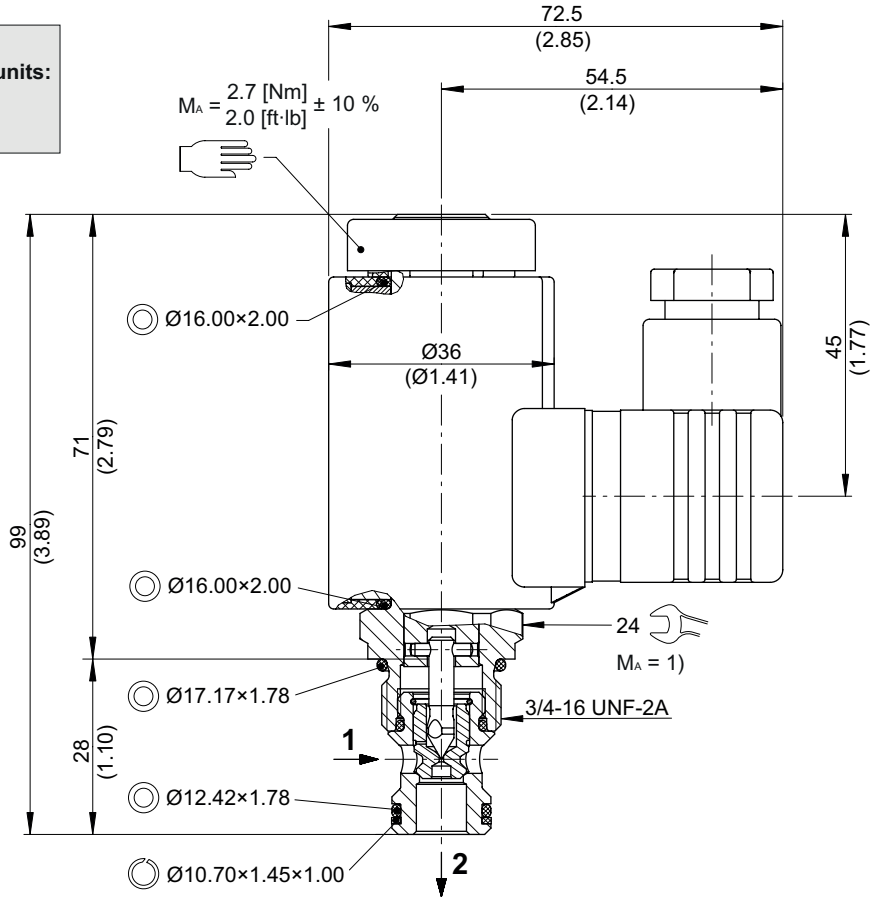

Installation information

NOTE!
1) When fitting the screw-in cartridge valve, use the specified tightening torque. The value can be found in the chapter "Technical data".

NOTE!
The seals are not available individually. The seal kit order number can be found in the chapter "Technical data".

ATTENTION!
Only qualified personnel with mechanical skills may carry out any maintenance work. Generally, the only work that should ever be undertaken is to check, and possibly replace, the seals. When changing seals, oil or grease the new seals thoroughly before fitting them.

Ordering code

Ex. W R 22L E A 5 _ - 4 24 D _

W = directional valve
R = check valve function, pilot operated
22L = 2-way/2-position, normally closed
E = electrical operation, V DC = 17 W / V AC = 17 W *(standard)*
N = electrical operation, V DC = 27 W / V AC = 25 W
A = thread size 3/4-16 UNF-2A for cavity AL
5 = nominal size 5
(blank) = NBR (nitril-butadien-rubber / BUNA) seals *(standard)*
V = FKM (fluorocarbon rubber / VITON) seals
(special seals - please consult BUCHER)
1 ... 9 = technical design no. (omit when ordering)
... = voltage e.g. 24 (24 V)
D = current DC
A = current AC
(blank) = DIN EN 175301-803 connection, 3-pole 2 P+E with mating plug (IP 65) *(standard)*
M100 = DIN EN 175301-803 connection, 3-pole 2 P+E
C = Kostal plug connection (IP 65)
JT = Junior Timer radial plug connection (with protection diode, IP 65)
IT = Junior Timer axial plug connection (with protection diode, IP 65)
D = Deutsch plug connection DT04-2P (IP 67/69K)
DT = Deutsch plug connection DT04-2P (with protection diode, IP 67/69K)
S = AMP Superseal 1.5 (IP 67) / Metri-Pack 150 (IP 65) plug connection
F = flying leads (500 mm)

} mating plug not supplied

Related data sheets

Reference	Description
400-P-040011	Form tools
400-P-040171	Cavity AL
400-P-720101	Threaded port body GALA
400-P-120110	Solenoid coil D36

info.ch@bucherhydraulics.com **www.bucherhydraulics.com**

© 2023 by Bucher Hydraulics AG Frutigen, 3714 Frutigen, Switzerland

All rights reserved.
Data is provided for the purpose of product description only, and must not be construed as warranted characteristics in the legal sense. The information does not relieve users from the duty of conducting their own evaluations and tests. Because the products are subject to continual improvement, we reserve the right to amend the product specifications contained in this catalogue.

BUCHER hydraulics
WWW.SUMY.IR

General information
Cavity

Type series: ALM

Dimensions and sectional view

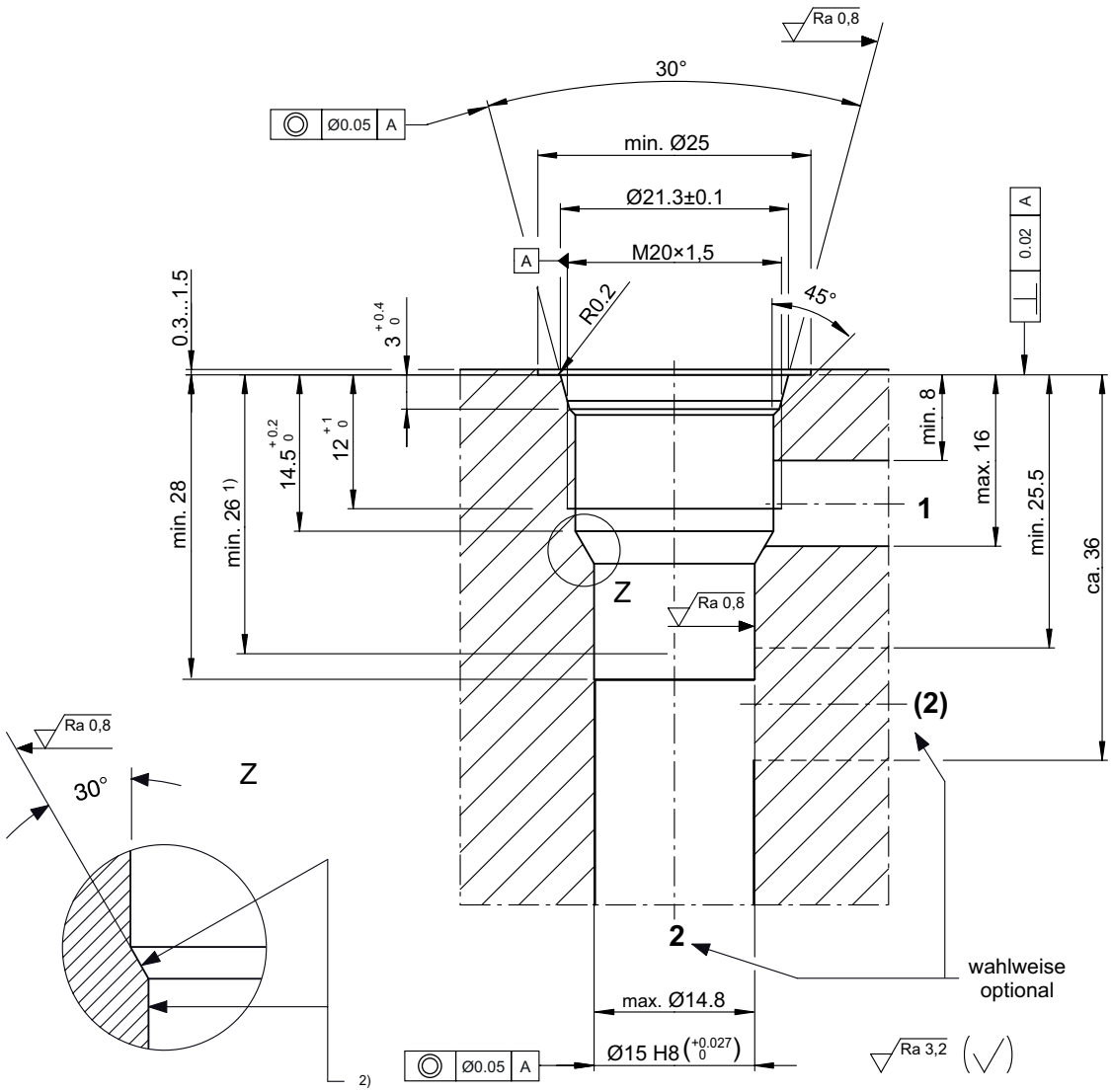

HINWEIS!
NOTE!

1) Passungstiefe
Minimum depth of specified diametral tolerance

2) Der Gewindeauslauf darf die Ringfläche und Ø15 H8 nicht verletzen.
The thread runout must not damage the ring surface or the Ø15 H8.

Beispiel für die Masseinheit:
Example for the dimensional units:

0.79 = 0.79 mm millimeter

Installation information

ATTENTION!
You must maintain the specified positional and diametral tolerances. To ensure trouble-free operation of the screw-in cartridges, we strongly recommend that pilot drilling, boring, reaming and cavity thread-cutting are always performed in one setup.

NOTE!
We offer form tool sets for sale or hire. For further information, see data sheet 400-P-040011.

NOTE!
Cavity type to factory standard.

info.ch@bucherhydraulics.com **www.bucherhydraulics.com**

© 2023 by Bucher Hydraulics AG Frutigen, 3714 Frutigen, Switzerland

All rights reserved.
Data is provided for the purpose of product description only, and must not be construed as warranted characteristics in the legal sense. The information does not relieve users from the duty of conducting their own evaluations and tests. Because the products are subject to continual improvement, we reserve the right to amend the product specifications contained in this catalogue.

BUCHER hydraulics

WWW.SUMY.IR

Directional valve 2-way/2-position

Q_{max} = 40 l/min, p_{max} = 350 bar
switching solenoid, pilot operated, poppet type
Type series: WR22L_Z5-...

- Screw-in cartridge valve
- For cavity ALM
- All external parts with zinc-nickel coating according to DIN EN ISO 19598
- Installation in threaded port body type GALMA
- The slip-on coil can be rotated, and it can be replaced without opening the hydraulic envelope
- High pressure wet-armature solenoids
- Various plug-connector systems and voltages are available
- Seat tight shut-off
- Compact construction
- Reliable switching, even after long dwell times

Description

The 2-way/2-position solenoid-operated directional seat valves, series WR22L_Z..., are size 5, two stage, pressure balanced screw-in valves with an M20×1,5 mounting thread. The main and pilot stages are both designed on the poppet/seat principle, and the 1 to 2 flow path is therefore virtually leak-free. This valve type is constructively designed for minimal head loss, thus the flow direction is possible only in one direction (1 to 2). The straightforward design delivers a good price/performance ratio and outstanding head loss/ flow ratings. All external parts of the screw-in valves are zinc-nickel plated, and are thus suitable for use in the harshest operating environments. The slip-on coils can be replaced without opening the hydraulic envelope and can be positioned at any angle through 360°. These valves are primarily used as pilot valves in certain mobile and industrial applications where leak-tight shut-off functions are crucially important. Examples are where loads, tensions, or clamping forces must be held without leakage. For self-assembly, please refer to the section related data sheets.

Symbol

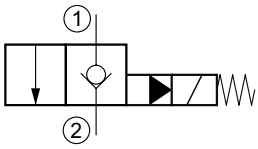

Technical Data

General Characteristics	Description, value, unit
Function group	Directional valve
Function	2-way/2-position
Design	Screw-in cartridge valve
Controls	switching solenoid
Characteristic	pilot operated, poppet type
Construction size	nominal size 5
Thread size	M20×1,5
Mounting attitude	unrestricted
Weight	0.40 kg
Cavity acc. factory standard	For cavity ALM
Tightening torque steel	50 Nm
Tightening torque aluminium	50 Nm
Tightening torque tolerance	± 10 %
Minimum ambient temperature	- 25 °C
Maximum ambient temperature	+ 50 °C
Surface protection	All external parts with zinc-nickel coating according to DIN EN ISO 19598
Available seal types	several seal types available, see ordering code
Seal kit order number	NBR: DS-245-N / FKM: DS-245-V

Hydraulic Characteristics	Description, value, unit
Maximum operating pressure	350 bar
Maximum flow rate	40 l/min
Flow direction	see symbol
Hydraulic fluid	HL and HLP mineral oil according to DIN 51 524; other fluids on request!
Minimum fluid temperature	- 25 °C
Maximum fluid temperature	+ 80 °C
Viscosity range	10 ... 500 mm^2/s (cSt)
Recommended viscosity range	15 ... 250 mm^2/s (cSt)
Minimum fluid cleanliness (cleanlineless class according to ISO 4406:1999)	class 20/18/15

ATTENTION!
Volume flow direction 2 to 1 not allowed.

NOTE!
The switching safety of the valve is achieved by the volume flow and pressure drop (Δp).

Electric Characteristics	Description, value, unit
Actuator type	solenoid coil
Solenoid coils type	D36
Supply voltage DC	12/24 V DC
Supply voltage AC	115/230 V AC (50 ... 60 Hz)
Supply voltage tolerance	± 10 %
Maximum permissible power consumption	Version "E": V DC = 17 W / V AC = 17 W Version "N": V DC = 27 W / V AC = 25 W
Switching time	Version "E": 25...110 ms (energized) / 65...180 ms (de-energized) Version "N": 30...125 ms (energized) / 30...110 ms (de-energized)
Relative duty cycle	100 %
Electrical connection coil	several connection types available, see ordering code
Protection class solenoid coil to ISO 20 653 / EN 60 529	several classes of protection available, see ordering code (with appropriate mating connector and proper fitting and sealing)

NOTE!
The switching time can be strongly dependent on flow rate, pressure, oil viscosity and the dwell time under pressure. In practice, the switching time may therefore deviate from the specified value range.

Performance graphs

measured with oil viscosity 33.0 mm²/s (cSt), coil at steady-state temperature and 10 % undervoltage

p = f (Q) Performance limit

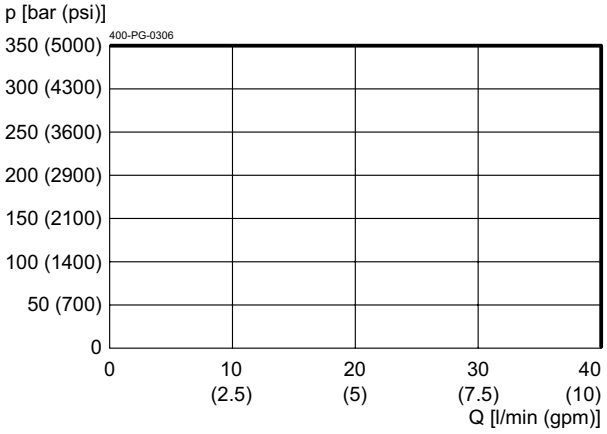

Δp = f (Q) Pressure drop-flow rate characteristic

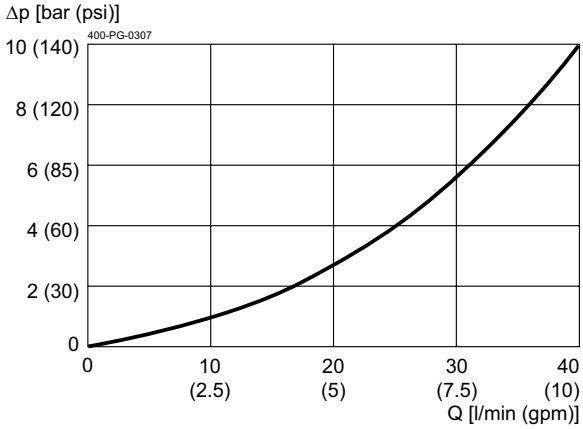

1 → 2, solenoid energising

Dimensions and sectional view

Beispiel für die Masseinheit:
Example for the dimensional units:

0.79 = 0.79 mm millimeter
(.031) = 0.031" inch

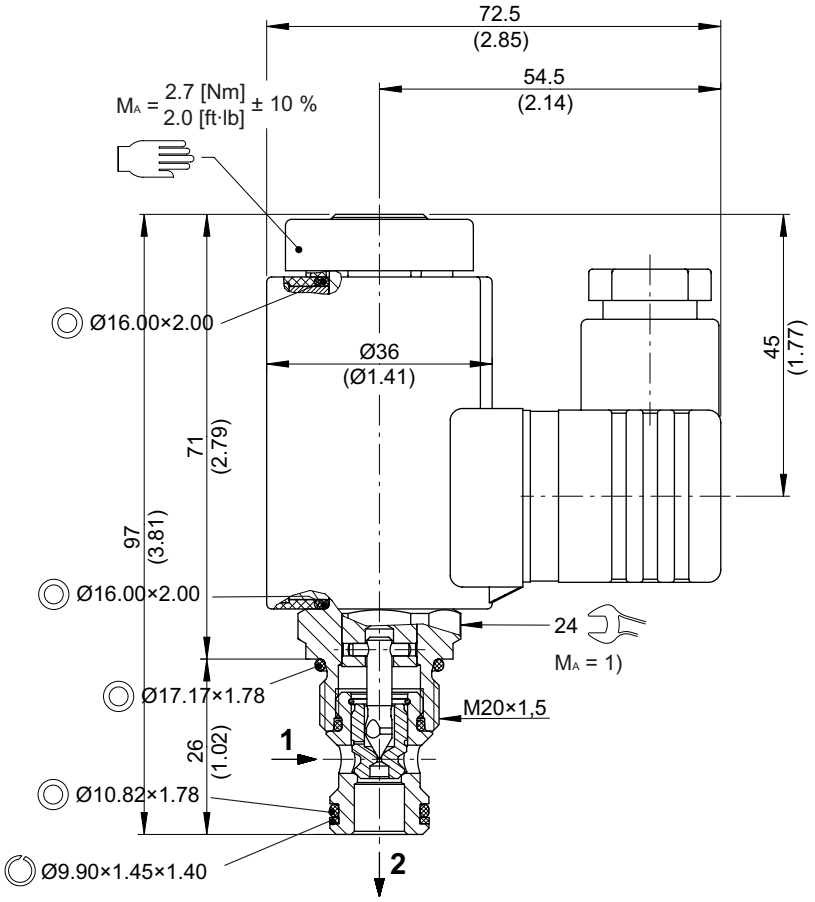

Installation information

NOTE!
1) When fitting the screw-in cartridge valve, use the specified tightening torque. The value can be found in the chapter "technical data".

NOTE!
The seals are not available individually. The seal kit order number can be found in the chapter "Technical data".

ATTENTION!
Only qualified personnel with mechanical skills may carry out any maintenance work. Generally, the only work that should ever be undertaken is to check, and possibly replace, the seals. When changing seals, oil or grease the new seals thoroughly before fitting them.

Ordering code

Ex. W R 22L E Z 5 _ - 4 24 D _

W = directional valve
R = check valve function, pilot operated
22L = 2-way/2-position, normally closed
E = electrical operation, V DC = 17 W / V AC = 17 W *(standard)*
N = electrical operation, V DC = 27 W / V AC = 25 W
Z = thread size M20×1,5 for cavity ALM
5 = nominal size 5
(blank) = NBR (nitril-butadien-rubber / BUNA) seals *(standard)*
V = FKM (fluorocarbon rubber / VITON) seals
(special seals - please consult BUCHER)
1 ... 9 = technical design no. (omit when ordering)
... = voltage e.g. 24 (24 V)
D = current DC
A = current AC
(blank) = DIN EN 175301-803 connection, 3-pole 2 P+E with mating plug (IP 65) *(standard)*
M100 = DIN EN 175301-803 connection, 3-pole 2 P+E
C = Kostal plug connection (IP 65)
JT = Junior Timer radial plug connection (with protection diode, IP 65)
IT = Junior Timer axial plug connection (with protection diode, IP 65)
D = Deutsch plug connection DT04-2P (IP 67/69K)
DT = Deutsch plug connection DT04-2P (with protection diode, IP 67/69K)
S = AMP Superseal 1.5 (IP 67) / Metri-Pack 150 (IP 65) plug connection
F = flying leads (500 mm)

} mating plug not supplied

Related data sheets

Reference	Description
400-P-040011	Forming tools
400-P-040201	Cavity ALM
400-P-720105	Threaded port body GALMA
400-P-120110	Solenoid coil D36

info.ch@bucherhydraulics.com **www.bucherhydraulics.com**

© 2021 by Bucher Hydraulics AG Frutigen, 3714 Frutigen, Switzerland

All rights reserved.
Data is provided for the purpose of product description only, and must not be construed as warranted characteristics in the legal sense. The information does not relieve users from the duty of conducting their own evaluations and tests. Because the products are subject to continual improvement, we reserve the right to amend the product specifications contained in this catalogue.

BUCHER hydraulics

WWW.SUMY.IR

Directional valve 2-way/2-position

Q_{max} = 40 l/min, p_{max} = 350 bar
pilot operated, poppet type, switching solenoid
Type series: WR22G_A5-...

- Screw-in cartridge valve
- For cavity AL
- All external parts with zinc-nickel coating according to DIN EN ISO 19598
- Installation in threaded port body type GALA
- The slip-on coil can be rotated, and it can be replaced without opening the hydraulic envelope
- High pressure wet-armature solenoids
- Various plug-connector systems and voltages are available
- Seat tight shut-off
- Compact construction
- High flow rates
- Low head loss
- Reliable switching, even after long dwell times

Description

The 2-way/2-position solenoid-operated directional seat valves, series WR22_A..., are size 5, two stage, pressure balanced screw-in valves with a 3/4-16 UNF-2A mounting thread. The main and pilot stages are both designed on the poppet/seat principle, and the 1 to 2 flow path is therefore virtually leak-free. The straightforward design delivers a good price/performance ratio and outstanding head loss/ flow ratings. All external parts of the screw-in valves are zinc-nickel plated, and are thus suitable for use in the harshest operating environments. The slip-on coils can be replaced without opening the hydraulic envelope and can be positioned at any angle through 360°. These valves are primarily used as pilot valves in certain mobile and industrial applications where leak-tight shut-off functions are crucially important. Examples are where loads, tensions, or clamping forces must be held without leakage. For self-assembly, please refer to the section related data sheets.

Symbol

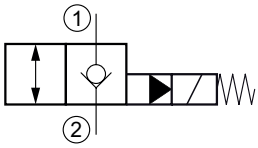

Technical Data

General Characteristics	Description, value, unit
Function group	Directional valve
Function	2-way/2-position
Design	Screw-in cartridge valve
Controls	switching solenoid
Characteristic	pilot operated, poppet type
Construction size	nominal size 5
Thread size	3/4-16 UNF-2A
Mounting attitude	unrestricted
Weight	0.40 kg
Cavity acc. factory standard	For cavity AL
Tightening torque steel	50 Nm
Tightening torque aluminium	50 Nm
Tightening torque tolerance	± 10 %
Minimum ambient temperature	- 25 °C
Maximum ambient temperature	+ 50 °C
Surface protection	All external parts with zinc-nickel coating according to DIN EN ISO 19598
Available seal types	several seal types available, see ordering code
Seal kit order number	NBR: DS-246-N / FKM: DS-246-V

Hydraulic Characteristics	Description, value, unit
Maximum operating pressure	350 bar
Maximum flow rate	40 l/min
Flow direction	see symbol
Hydraulic fluid	HL and HLP mineral oil according to DIN 51 524; other fluids on request!
Minimum fluid temperature	- 25 °C
Maximum fluid temperature	+ 80 °C
Viscosity range	10 ... 500 mm^2/s (cSt)
Recommended viscosity range	15 ... 250 mm^2/s (cSt)
Minimum fluid cleanliness (cleanlineless class according to ISO 4406:1999)	class 20/18/15

NOTE!
The switching safety of the valve is achieved by the volume flow and pressure drop (Δp).

Electric Characteristics	Description, value, unit
Actuator type	solenoid coil
Solenoid coils type	D36
Supply voltage DC	12/24 V DC
Supply voltage AC	115/230 V AC (50 ... 60 Hz)
Supply voltage tolerance	± 10 %
Maximum permissible power consumption	Version "E": V DC = 17 W / V AC = 17 W Version "N": V DC = 27 W / V AC = 25 W
Switching time	Version "E": 30...120 ms (energized) / 75...220 ms (de-energized) Version "N": 30...140 ms (energized) / 35...95 ms (de-energized)

Electric Characteristics	Description, value, unit
Relative duty cycle	100 %
Electrical connection coil	several connection types available, see ordering code
Protection class solenoid coil to ISO 20 653 / EN 60 529	several classes of protection available, see ordering code (with appropriate mating connector and proper fitting and sealing)

NOTE!
The switching time can be strongly dependent on flow rate, pressure, oil viscosity and the dwell time under pressure. In practice, the switching time may therefore deviate from the specified value range.

Performance graphs

measured with oil viscosity 33.0 mm²/s (cSt), coil at steady-state temperature and 10 % undervoltage

p = f (Q) Performance limit

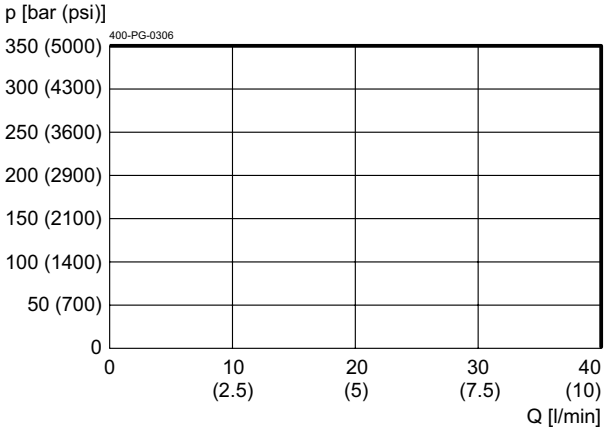

Δp = f (Q) Pressure drop-flow rate characteristic

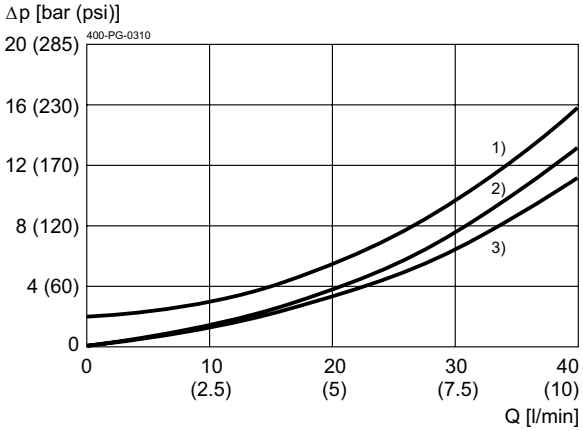

Version "E" - 17 W
1) 2 → 1, solenoid de-energized
2) 1 → 2, solenoid energized
3) 2 → 1, solenoid energized

Δp = f (Q) Pressure drop-flow rate characteristic

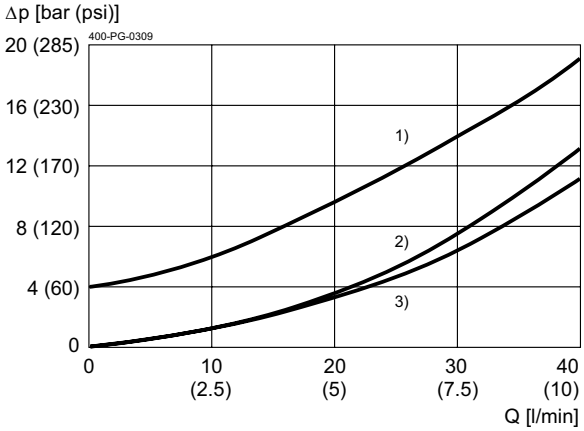

Version "N" – 27/25 W
1) 2 → 1, solenoid de-energized
2) 1 → 2, solenoid energized
3) 2 → 1, solenoid energized

Dimensions and sectional view

Beispiel für die Masseinheit:
Example for the dimensional units:

0.79 = 0.79 mm millimeter
(.031) = 0.031" inch

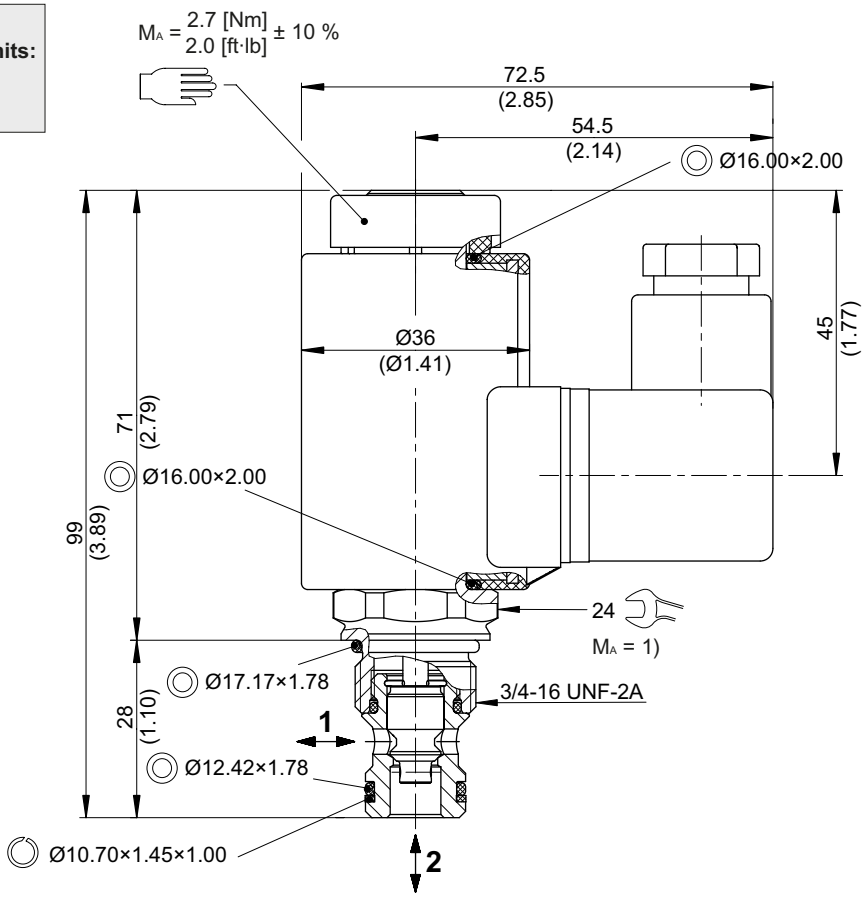

Installation information

NOTE!
1) When fitting the screw-in cartridge valve, use the specified tightening torque. The value can be found in the chapter "technical data".

NOTE!
The seals are not available individually. The seal kit order number can be found in the chapter "Technical data".

ATTENTION!
Only qualified personnel with mechanical skills may carry out any maintenance work. Generally, the only work that should ever be undertaken is to check, and possibly replace, the seals. When changing seals, oil or grease the new seals thoroughly before fitting them.

Ordering code

Ex. W R 22G E A 5 _ - 5 24 D _

W	=	directional valve
R	=	check valve function, pilot operated
22G	=	2-way/2-position, normally closed
E	=	electrically operated, V DC = 17 W / V AC = 17 W *(standard)*
N	=	electrically operated, V DC = 27 W / V AC = 25 W
A	=	thread size 3/4-16 UNF-2A for cavity AL
5	=	nominal size 5
(blank)	=	NBR (nitril-butadien-rubber / BUNA) seals *(standard)*
V	=	FKM (fluorocarbon rubber / VITON) seals *(special seals - please consult BUCHER)*
1 ... 9	=	technical design no. (omit when ordering)
...	=	voltage e.g. 24 (24 V)
D	=	current DC
A	=	current AC
(blank)	=	DIN EN 175301-803 connection, 3-pole 2 P+E with mating plug (IP 65) *(standard)*
M100	=	DIN EN 175301-803 connection, 3-pole 2 P+E
C	=	Kostal plug connection (IP 65)
JT	=	Junior Timer radial plug connection (with protection diode, IP 65)
IT	=	Junior Timer axial plug connection (with protection diode, IP 65)
D	=	Deutsch plug connection 45° DT04-2P (IP 67/69K)
DT	=	Deutsch plug connection 45° DT04-2P (with protection diode, IP 67/69K)
S	=	AMP Superseal 1.5 (IP 67) / Metri-Pack 150 (IP 65) plug connection
F	=	flying leads (500 mm)

mating plug not supplied

Related data sheets

Reference	Description
400-P-040011	Forming tools
400-P-040171	Cavity AL
400-P-720101	Threaded port body GALA
400-P-120110	Solenoid coil D36

info.ch@bucherhydraulics.com **www.bucherhydraulics.com**

© 2021 by Bucher Hydraulics AG Frutigen, 3714 Frutigen, Switzerland

All rights reserved.
Data is provided for the purpose of product description only, and must not be construed as warranted characteristics in the legal sense. The information does not relieve users from the duty of conducting their own evaluations and tests. Because the products are subject to continual improvement, we reserve the right to amend the product specifications contained in this catalogue.

BUCHER hydraulics

WWW.SUMY.IR

Directional valve 2-way/2-position

Q_{max} = 40 l/min, p_{max} = 420 bar
switching solenoid, pilot operated, poppet type
Type series: WRP22GEA5...

- Screw-in cartridge valve
- For cavity AL
- All external parts with zinc-nickel coating according to DIN EN ISO 19598
- Installation in threaded port body type GALA
- The slip-on coil can be rotated, and it can be replaced without opening the hydraulic envelope
- High pressure wet-armature solenoids
- Various plug-connector systems and voltages are available
- High-pressure model
- Seat tight shut-off
- Compact construction
- Low head loss

Description

The 2-way/2-position solenoid operated directional seat valves, series WRP22..., are size 5, two-stage, screw-in valves with a 3/4-16 UNF-2A mounting thread. The main and pilot stages are both designed on the poppet/seat principle, and the 1 to 2 flow path is therefore virtually leak-free. The straightforward design delivers an outstanding price/performance ratio and good headloss/flow ratings. All external parts of the screw-in valves are zinc-nickel plated, and are thus suitable for use in the harshest operating environments. The slip-on coils can be replaced without opening the hydraulic envelope and can be positioned at any angle through 360°. These valves are primarily used as pilot valves in certain mobile and industrial applications where leak-tight shut-off functions are crucially important. Examples are where loads, tensions, or clamping forces must be held without leakage. For self-assembly, please refer to the section related data sheets.

Symbol

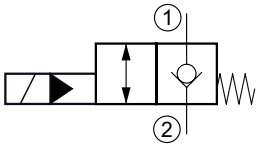

Technical Data

General Characteristics	Description, value, unit
Function group	Directional valve
Function	2-way/2-position
Design	Screw-in cartridge valve
Controls	switching solenoid
Characteristic	pilot operated, poppet type
Construction size	nominal size 5
Thread size	3/4-16 UNF-2A
Mounting attitude	unrestricted
Weight	0.40 kg
Cavity acc. factory standard	For cavity AL
Tightening torque steel	60 Nm
Tightening torque aluminium	60 Nm
Tightening torque tolerance	± 10 %
Minimum ambient temperature	- 25 °C
Maximum ambient temperature	+ 50 °C
Surface protection	All external parts with zinc-nickel coating according to DIN EN ISO 19598
Available seal types	several seal types available, see ordering code
Seal kit order number	NBR: DS-246-N / FKM: DS-246-V

Hydraulic Characteristics	Description, value, unit
Maximum operating pressure	420 bar
Maximum flow rate	40 l/min
Flow direction	see symbol
Hydraulic fluid	HL and HLP mineral oil according to DIN 51 524; other fluids on request!
Minimum fluid temperature	- 25 °C
Maximum fluid temperature	+ 80 °C
Viscosity range	10 ... 500 mm^2/s (cSt)
Recommended viscosity range	15 ... 250 mm^2/s (cSt)
Minimum fluid cleanliness (cleanlineless class according to ISO 4406:1999)	class 20/18/15

Electric Characteristics	Description, value, unit
Actuator type	solenoid coil
Solenoid coils type	D36
Supply voltage DC	12/24 V DC
Supply voltage AC	115/230 V AC (50 ... 60 Hz)
Supply voltage tolerance	± 10 %
Maximum permissible power consumption	V DC / V AC = 17 W
Relative duty cycle	100 %
Electrical connection coil	several connection types available, see ordering code
Protection class solenoid coil to ISO 20 653 / EN 60 529	several classes of protection available, see ordering code (with appropriate mating connector and proper fitting and sealing)

Performance graphs

measured with oil viscosity 33.0 mm²/s (cSt), coil at steady-state temperature and 10 % undervoltage

p = f (Q) Performance limit

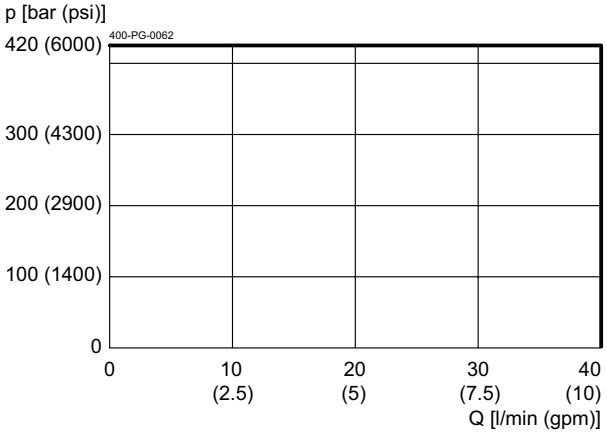

Δp = f (Q) Pressure drop-flow rate characteristic

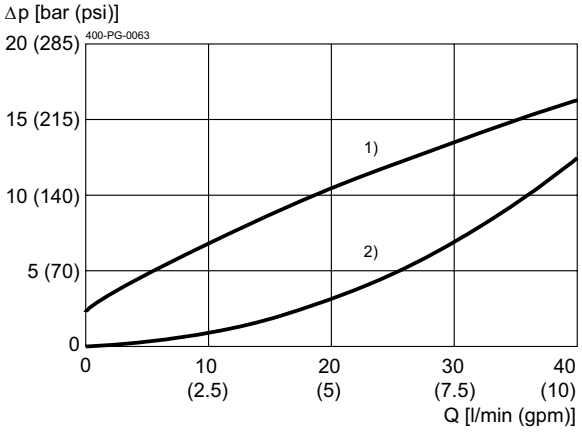

1) 2 → 1, solenoid de-energizing
2) 2 → 1 / 1 → 2, solenoid energizing

Dimensions and sectional view

Beispiel für die Masseinheit:
Example for the dimensional units:

0.79 = 0.79 mm millimeter
(.031) = 0.031" inch

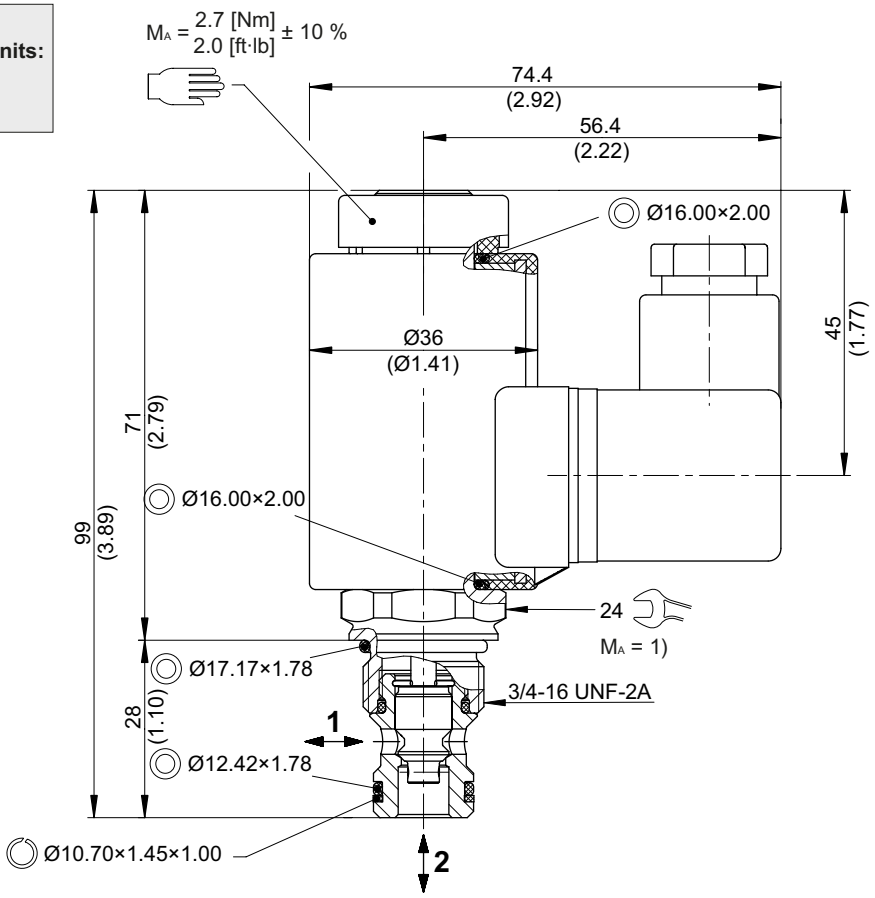

Installation information

NOTE!
1) When fitting the screw-in cartridge valve, use the specified tightening torque. The value can be found in the chapter "technical data".

NOTE!
The seals are not available individually. The seal kit order number can be found in the chapter "Technical data".

ATTENTION!
Only qualified personnel with mechanical skills may carry out any maintenance work. Generally, the only work that should ever be undertaken is to check, and possibly replace, the seals. When changing seals, oil or grease the new seals thoroughly before fitting them.

Ordering code

Ex. W R P 22G E A 5 _ - 2 24 D _

W	=	directional valve
R	=	check valve function, pilot operated
P	=	high-pressure version (420 bar)
22G	=	2-way/2-position, normally closed
E	=	electrically operated, V DC / V AC = 17 W
A ... Q	=	standard model according to valid data sheet *(standard)*
Z ... R	=	special model after consultation
5	=	nominal size 5
(blank)	=	NBR (nitril-butadien-rubber / BUNA) seals *(standard)*
V	=	FKM (fluorocarbon rubber / VITON) seals *(special seals - please consult BUCHER)*
1 ... 9	=	technical design no. (omit when ordering)
...	=	voltage e.g. 24 (24 V)
D	=	current DC
A	=	current AC
(blank)	=	DIN EN 175301-803 connection, 3-pole 2 P+E with mating plug (IP 65) *(standard)*
M100	=	DIN EN 175301-803 connection, 3-pole 2 P+E
C	=	Kostal plug connection (IP 65)
JT	=	Junior Timer radial plug connection (with protection diode, IP 65)
IT	=	Junior Timer axial plug connection (with protection diode, IP 65)
D	=	Deutsch plug connection DT04-2P (IP 67/69K)
DT	=	Deutsch plug connection DT04-2P (with protection diode, IP 67/69K)
S	=	AMP Superseal 1.5 (IP 67) / Metri-Pack 150 (IP 65) plug connection
F	=	flying leads (500 mm)

mating plug not supplied

Related data sheets

Reference	Description
400-P-040011	Forming tools
400-P-040171	Cavity AL
400-P-720101	Threaded port body GALA
400-P-120110	Solenoid coil D36

info.ch@bucherhydraulics.com
www.bucherhydraulics.com

© 2021 by Bucher Hydraulics AG Frutigen, 3714 Frutigen, Switzerland

All rights reserved.
Data is provided for the purpose of product description only, and must not be construed as warranted characteristics in the legal sense. The information does not relieve users from the duty of conducting their own evaluations and tests. Because the products are subject to continual improvement, we reserve the right to amend the product specifications contained in this catalogue.

BUCHER hydraulics

WWW.SUMY.IR

Directional valve 2-way/2-position

Q_{max} = 40 l/min, p_{max} = 350 bar
switching solenoid, pilot operated, poppet type
Type series: WR22G_Z5-...

- Screw-in cartridge valve
- For cavity ALM
- All external parts with zinc-nickel plating according to DIN EN ISO 19598
- The slip-on coil can be rotated, and it can be replaced without opening the hydraulic envelope
- High pressure wet-armature solenoids
- Various plug-connector systems and voltages are available
- Seat tight shut-off
- Compact construction
- High flow rates
- Low head loss
- Reliable switching, even after long dwell times
- Installation in threaded port body type GALMA

Description

The 2-way/2-position solenoid-operated directional seat valves, series WR22_Z..., are size 5, two stage, pressure balanced screw-in valves with an M20×1.5 mounting thread. The main and pilot stages are both designed on the poppet/seat principle, and the 1 to 2 flow path is therefore virtually leak-free. The straightforward design delivers a good price/performance ratio and outstanding head loss/ flow ratings. All external parts of the screw-in valves are zinc-nickel plated and are thus suitable for use in the harshest operating environments. The slip-on coils can be replaced without opening the hydraulic envelope and can be positioned at any angle through 360°. These valves are primarily used as pilot valves in certain mobile and industrial applications where leak-tight shut-off functions are crucially important. Examples are where loads, tensions, or clamping forces must be held without leakage. For self-assembly, please refer to the section related data sheets.

Symbol

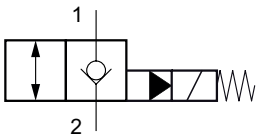

Technical data

General characteristics	Description, value, unit
Function group	Directional valve
Function	2-way/2-position
Design	Screw-in cartridge valve
Controls	switching solenoid
Characteristic	pilot operated, poppet type
Construction size	NG 5
Thread size	M20×1,5
Mounting attitude	unrestricted
Weight	0.40 kg
Cavity acc. factory standard	For cavity ALM
Tightening torque steel	50 Nm
Tightening torque aluminium	50 Nm
Tightening torque tolerance	± 10 %
Minimum ambient temperature	- 30 °C
Maximum ambient temperature	+ 50 °C
Surface protection	All external parts with zinc-nickel plating according to DIN EN ISO 19598
Sealing material	see ordering code
Seal kit order number	NBR: DS-245-N / FKM: DS-245-V

Hydraulic characteristics	Description, value, unit
Maximum operating pressure	350 bar
Maximum flow rate	40 l/min
Flow direction	see symbol
Hydraulic fluid	HL and HLP mineral oil according to DIN 51 524; other fluids on request!
Minimum fluid temperature	- 30 °C
Maximum fluid temperature	+ 80 °C
Viscosity range	10 ... 500 mm^2/s (cSt)
Recommended viscosity range	15 ... 250 mm^2/s (cSt)
Minimum fluid cleanliness (cleanlineless class according to ISO 4406:1999)	class 20/18/15

NOTE!
The switching safety of the valve is achieved by the volume flow and pressure drop (Δp).

Electric characteristics	Description, value, unit
Actuator type	solenoid coil
Solenoid coils type	D36
Supply voltage DC	12/24 V DC
Supply voltage AC	115/230 (50 ... 60 Hz) V AC
Supply voltage tolerance	± 10 %
Nominal power consumption	Version "E": V DC = 17 W / V AC = 17 W Version "N": V DC = 27 W / V AC = 25 W
Switching time	Version "E": 30...120 ms (energized) 75...220 ms (de-energized) Version "N": 30...140 ms (energized) 35...95 ms (de-energized)
Relative duty cycle	100 %
Electrical connection coil	several connection types available, see ordering code
Protection class solenoid coil to ISO 20 653 / EN 60 529	several classes of protection available, see ordering code (with appropriate mating connector and proper fitting and sealing)

NOTE!
The switching time can be strongly dependent on flow rate, pressure, oil viscosity and the dwell time under pressure. In practice, the switching time may therefore deviate from the specified value range.

Performance graphs

measured with oil viscosity 33.0 mm²/s (cSt), coil at steady-state temperature and 10 % undervoltage

p = f (Q) Performance limit

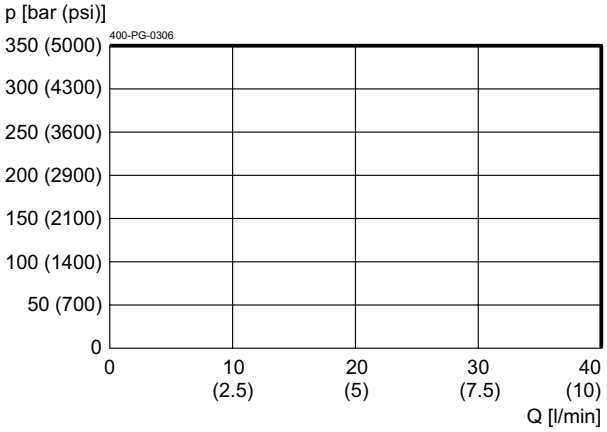

Δp = f (Q) Pressure drop-flow rate characteristic

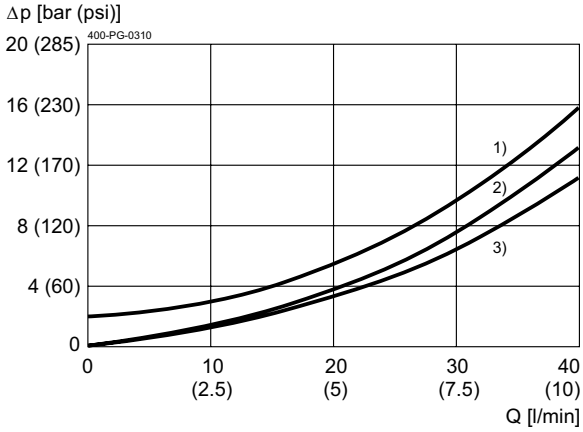

Version "E" - 17 W
1) 2 → 1, solenoid de-energized
2) 1 → 2, solenoid energized
3) 2 → 1, solenoid energized

Δp = f (Q) Pressure drop-flow rate characteristic

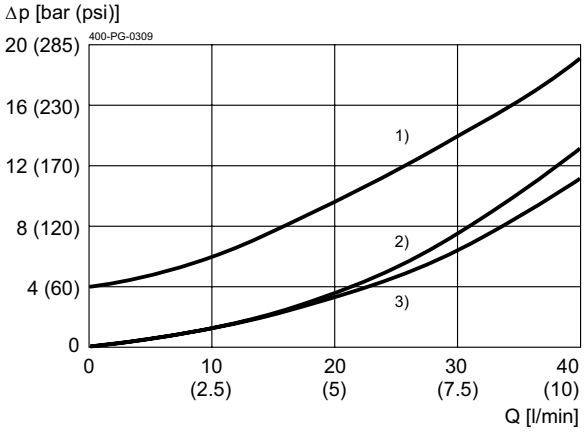

Version "N" – 27/25 W
1) 2 → 1, solenoid de-energized
2) 1 → 2, solenoid energized
3) 2 → 1, solenoid energized

Dimensions and sectional view

Beispiel für die Masseinheit:
Exampel for the dimensional units:

0.79	= 0.79 mm	millimeter
(.031)	= 0.031"	inch

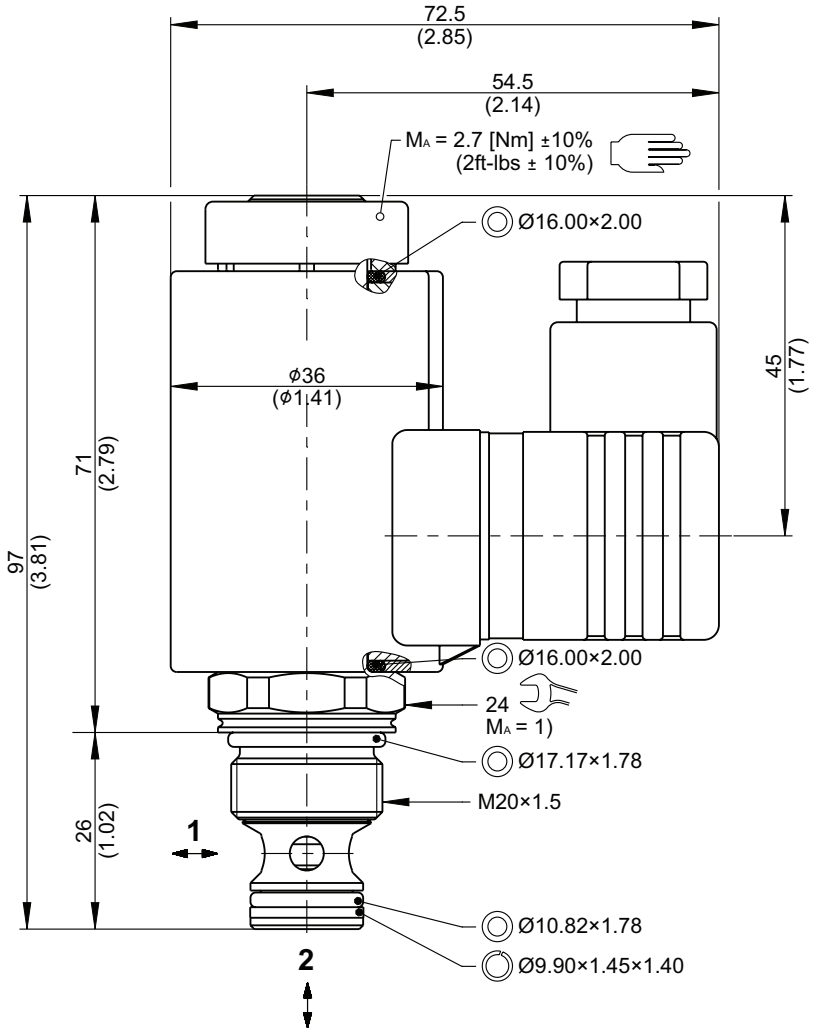

Installation information

NOTE!
1) When fitting the screw-in cartridge valve, use the specified tightening torque. The value can be found in the chapter "Technical data".

ATTENTION!
Only qualified personnel with mechanical skills may carry out any maintenance work. Generally, the only work that should ever be undertaken is to check, and possibly replace, the seals. When changing seals, oil or grease the new seals thoroughly before fitting them.

NOTE!
The seals are not available individually. The seal kit order number can be found in the chapter "Technical data".

Ordering code

Ex. W R 22G E Z 5 _ - 5 24 D _

W	=	directional valve
R	=	check valve function, pilot operated
22G	=	2-way/2-position function, normally closed
E	=	electrically operated, V DC = 17 W / V AC = 17 W **(standard)**
N	=	electrically operated, V DC = 27 W / V AC = 25 W
Z	=	thread size M20×1.5 for cavity ALM
5	=	nominal size 5
(ohne)	=	NBR (nitril-butadien-rubber / BUNA) seals **(standard)**
V	=	FKM (fluorocarbon rubber / VITON) seals (special seals on request)
1 ... 9	=	technical design no. (omit by ordering)
…	=	voltage e.g. 24 (24 V)
D	=	current DC
A	=	current AC
(blank)	=	DIN EN 175301-803 connection, 3-pole 2 P+E, with mating plug (IP65) **(standard)**
M100	=	DIN EN 175301-803 connection, 3-pole 2 P+E (IP65)
J	=	Junior Timer radial plug connection (IP 65)
JT	=	Junior Timer radial plug connection (with protection diode, IP 65)
IT	=	Junior Timer axial plug connection (with protection diode, IP 65)
D	=	Deutsch plug connection DT04-2P, 2-pole radial (IP 67/69)
DT	=	Deutsch plug connection DT04-2P, 2-pole radial (with protection diode, IP 67/69)
		for the following plug-variants, please consult BUCHER:
F	=	flying leads (500mm)
C	=	Kostal plug connection (IP 65)
S	=	AMP Superseal 1.5 (IP 67) / Metri-Pack 150 (IP 65) plug connection

mating plug not supplied

Related data sheets

Reference	Description
400-P-040011	Form tools
400-P-040201	Cavity ALM
400-P-720105	Threaded port body GALMA
400-P-120110	Solenoid coil D36

info.ch@bucherhydraulics.com **www.bucherhydraulics.com**

© 2024 by Bucher Hydraulics AG Frutigen, 3714 Frutigen, Switzerland

All rights reserved.
Data is provided for the purpose of product description only, and must not be construed as warranted characteristics in the legal sense. The information does not relieve users from the duty of conducting their own evaluations and tests. Because the products are subject to continual improvement, we reserve the right to amend the product specifications contained in this catalogue.

BUCHER hydraulics
WWW.SUMY.IR

General information
Cavity

Type series: AX/C1020

Dimensions and sectional view

Beispiel für die Masseinheit:
Example for the dimensional units:
0.79 = 0.79 mm millimeter

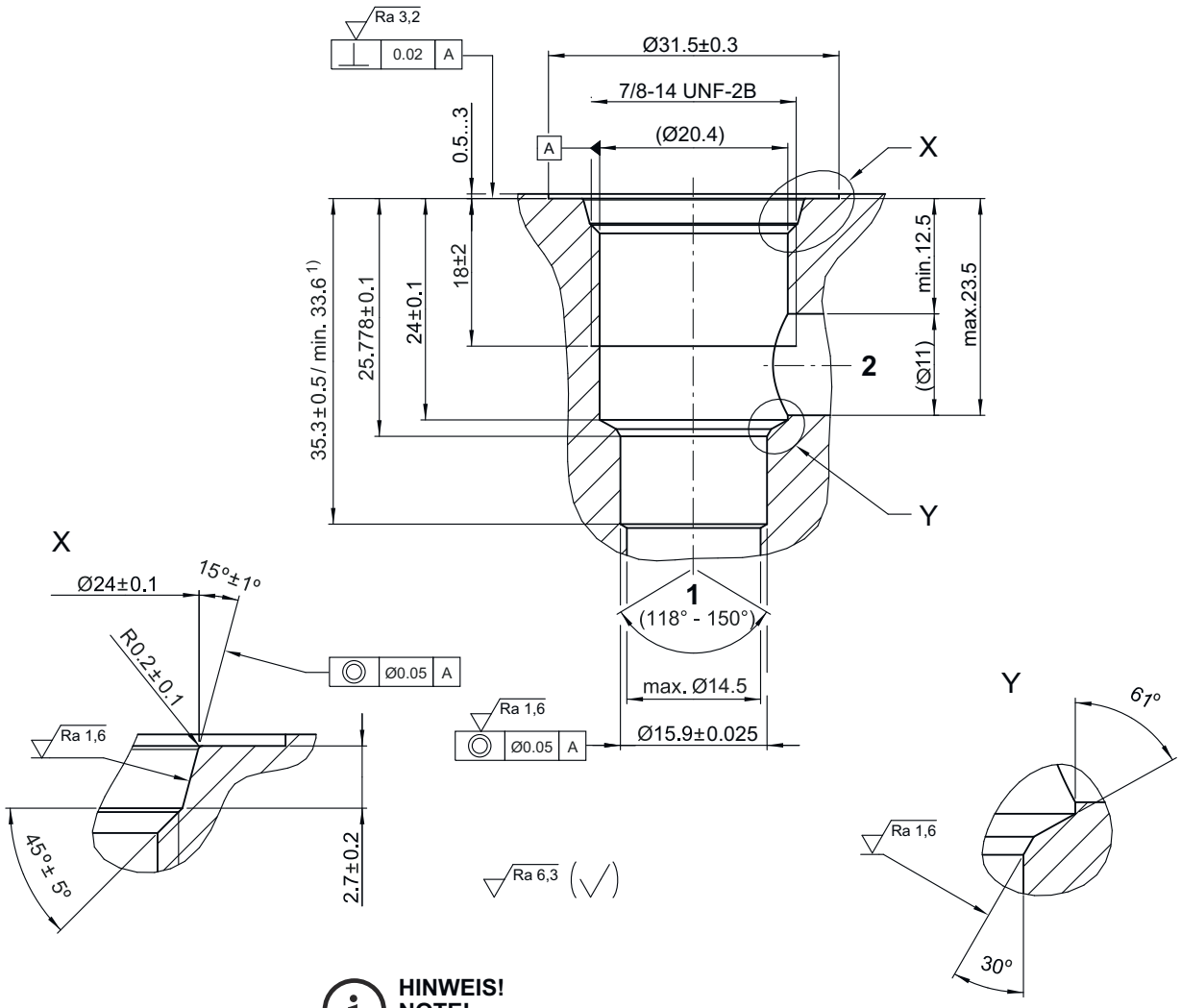

HINWEIS!
NOTE!

1) Passungstiefe
Minimum depth of specified diametral tolerance

WWW.SUMY.IR

Installation information

ATTENTION!
You must maintain the specified positional and diametral tolerances. To ensure trouble-free operation of the screw-in cartridges, we strongly recommend that pilot drilling, boring, reaming and cavity thread-cutting are always performed in one setup.

NOTE!
Cavity type to factory standard.

NOTE!
We offer form tool sets for sale or hire. See data sheet 400-P-040011 for further information.

info.ch@bucherhydraulics.com **www.bucherhydraulics.com**

© 2025 by Bucher Hydraulics AG Frutigen, 3714 Frutigen, Switzerland

All rights reserved.
Data is provided for the purpose of product description only, and must not be construed as warranted characteristics in the legal sense. The information does not relieve users from the duty of conducting their own evaluations and tests. Because the products are subject to continual improvement, we reserve the right to amend the product specifications contained in this catalogue.

BUCHER hydraulics
WWW.SUMY.IR

Directional valve 2-way/2-position

Q_{max} = 80 l/min, p_{max} = 350 bar
pilot operated, poppet type, switching solenoid
Type series: WRVP22G-8X...

- Screw-in cartridge valve
- For cavity AX/C1020
- All external parts with zinc-nickel plating according to DIN EN ISO 19598
- Installation in threaded port body type GAX-12
- Fits common cavity according to ISO and NFPA
- Reliable switching, even after long dwell times
- Low head loss
- High flow rates
- The slip-on coil can be rotated, and it can be replaced without opening the hydraulic envelope
- High pressure wet-armature solenoids
- Various plug-connector systems and voltages are available

Description

These 2-way/2-position solenoid operated directional seat valves, series WRVP22G-8X..., are size 8 / SAE 10, two stage, pressure balanced screw-in valves with a 7/8-14 UNF mounting thread. They are designed on the poppet/seat principle, and the 2 to 1 flow path is therefore virtually leak-free. The straightforward design delivers a good price/performance ratio and outstanding headloss/flow ratings. All external parts of the valves are zinc-nickel plated and are thus suitable for use in the harshest operating environments. The slip-on coils can be replaced without opening the hydraulic envelope and can be positioned at any angle through 360°. These valves are used in mobile and industrial applications where leak-tight shutoff functions are crucially important. Examples are where loads, tensions, or clamping forces must be held without leakage. For self-assembly, please refer to the section related data sheets.

Symbol

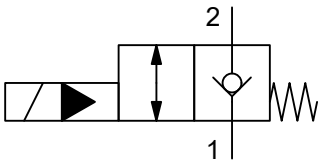

Technical data

General characteristics	Description, value, unit
Function group	Directional valve
Function	2-way/2-position
Design	Screw-in cartridge valve
Controls	switching solenoid
Characteristic	pilot operated, poppet type
MTTFd value	150 years
Construction size	NG 8 / SAE 10
Thread size	7/8-14 UNF-2A
Mounting attitude	unrestricted
Weight	0.58 kg
Cavity acc. ISO	fits into ISO 17209: 7/8-01-0-13
Cavity acc. NFPA	fits into NFPA/T3.5.50: 0.875-01-0-09
Cavity acc. factory standard	For cavity AX/C1020
Tightening torque steel	80 Nm
Tightening torque aluminium	80 Nm
Tightening torque tolerance	± 10 %
Minimum ambient temperature	- 30 °C
Maximum ambient temperature	+ 50 °C
Surface protection	All external parts with zinc-nickel plating according to DIN EN ISO 19598
Sealing material	see ordering code
Seal kit order number	NBR: DS-479-N / FKM: DS-479-V

Hydraulic characteristics	Description, value, unit
Maximum operating pressure	350 bar
Maximum flow rate	80 l/min
Flow direction	see symbol
Hydraulic fluid	HL and HLP mineral oil according to DIN 51 524; other fluids on request!
Minimum fluid temperature	- 30 °C
Maximum fluid temperature	+ 80 °C
Viscosity range	10 ... 500 mm^2/s (cSt)
Recommended viscosity range	15 ... 250 mm^2/s (cSt)
Minimum fluid cleanliness (cleanlineless class according to ISO 4406:1999)	class 20/18/15

NOTE!
The switching safety of the valve is achieved by the volume flow and pressure drop (Δp).

Electric characteristics	Description, value, unit
Actuator type	solenoid coil
Solenoid coils type	36X48/16.1
Supply voltage DC	12/24 V DC
Supply voltage tolerance	± 10 %

WWW.SUMY.IR

Electric characteristics	Description, value, unit
Nominal power consumption	19 W
Switching time	50...130 ms (energized) 70...170 ms (de-energized)
Relative duty cycle	100 %
Electrical connection coil	several connection types available, see ordering code
Protection class solenoid coil to ISO 20 653 / EN 60 529	IP 65 / IP 67 / IP 69K, see “Ordering code” (with appropriate mating connector and proper fitting and sealing)

NOTE!
The switching time can be strongly dependent on flow rate, pressure, oil viscosity and the dwell time under pressure. In practice, the switching time may therefore deviate from the specified value range.

Performance graphs

measured with oil viscosity 33.0 mm²/s (cSt), coil at steady-state temperature and 10 % undervoltage

Δp = f (Q) Pressure drop-flow rate characteristic

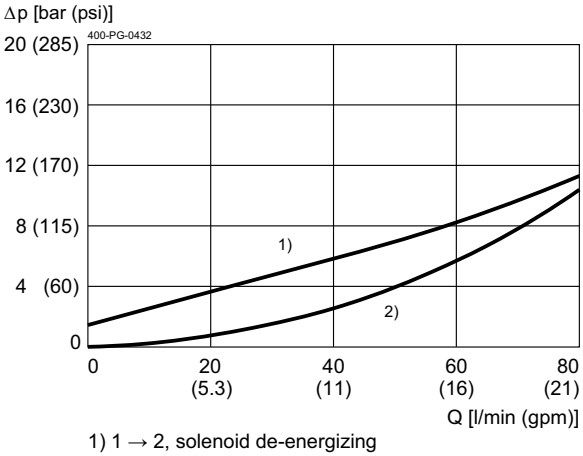

1) 1 → 2, solenoid de-energizing
2) 2 → 1, solenoid energizing
1 → 2, solenoid energizing

p = f (Q) Performance limit

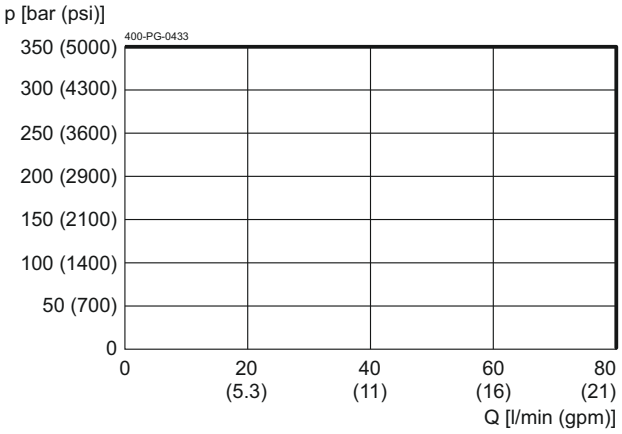

Dimensions and sectional view

Beispiel für die Masseinheit:
Exampel for the dimensional units:

0.79	= 0.79 mm	millimeter
(.031)	= 0.031"	inch

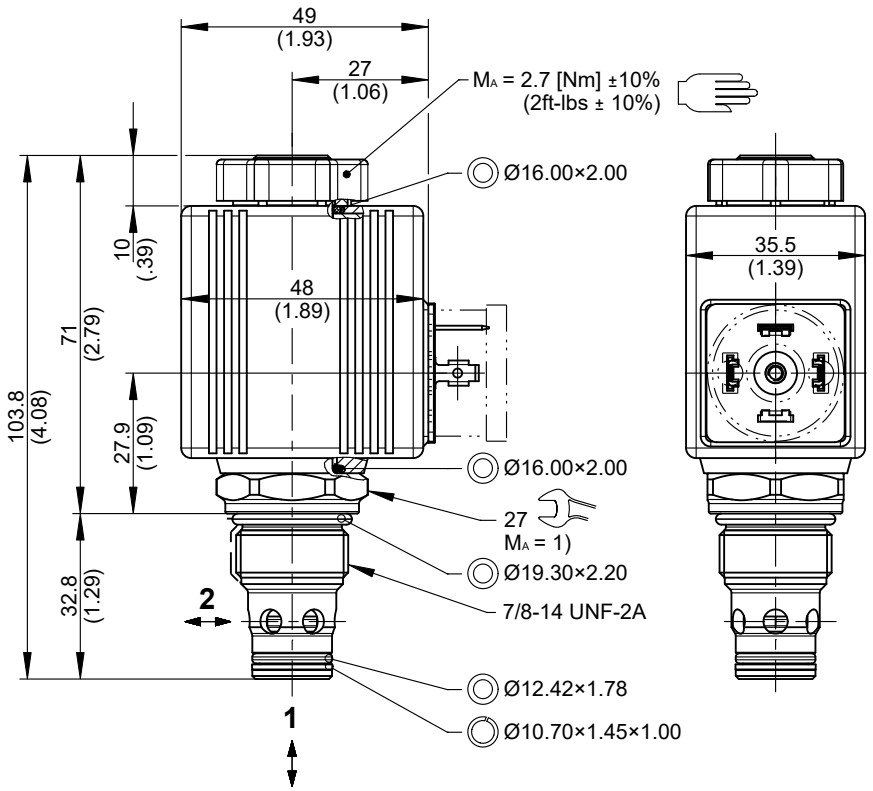

Installation information

NOTE!
1) When fitting the screw-in cartridge valve, use the specified tightening torque. The value can be found in the chapter "Technical data".

ATTENTION!
Only qualified personnel with mechanical skills may carry out any maintenance work. Generally, the only work that should ever be undertaken is to check, and possibly replace, the seals. When changing seals, oil or grease the new seals thoroughly before fitting them.

NOTE!
To achieve the screw-in valve's maximum performance rating, fit the solenoid coil as shown (with the plug pins nearest the valve body). The valve must be installed in a steel body.

Ordering code

| | | |

BUCHER hydraulics
WWW.SUMY.IR

General information
Cavity

Type series: DC

Dimensions and sectional view

Beispiel für die Masseinheit:
Example for the dimensional units:
0.79 = 0.79 mm millimeter

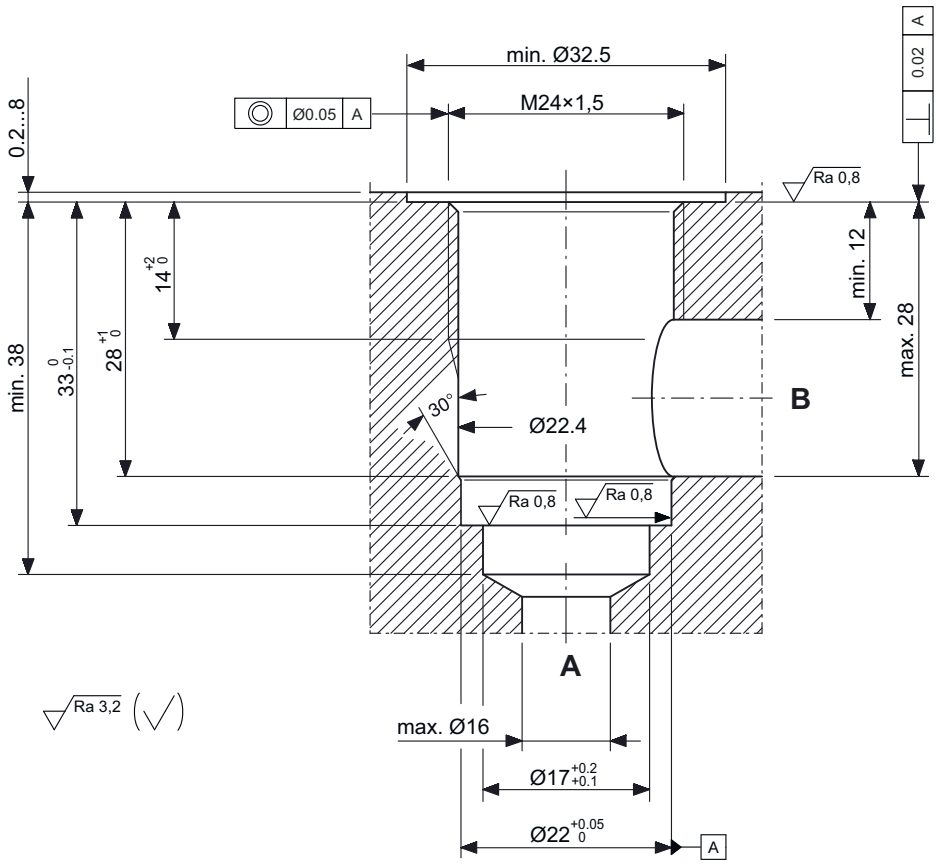

WWW.SUMY.IR

Installation information

ATTENTION!
You must maintain the specified positional and diametral tolerances. To ensure trouble-free operation of the screw-in cartridges, we strongly recommend that pilot drilling, boring, reaming and cavity thread-cutting are always performed in one setup.

NOTE!
Cavity type to factory standard.

NOTE!
We offer form tool sets for sale or hire. See data sheet 400-P-040011 for further information.

info.ch@bucherhydraulics.com **www.bucherhydraulics.com**

© 2025 by Bucher Hydraulics AG Frutigen, 3714 Frutigen, Switzerland

All rights reserved.
Data is provided for the purpose of product description only, and must not be construed as warranted characteristics in the legal sense. The information does not relieve users from the duty of conducting their own evaluations and tests. Because the products are subject to continual improvement, we reserve the right to amend the product specifications contained in this catalogue.

BUCHER hydraulics
WWW.SUMY.IR

Directional valve 2-way/2-position

Q_{max} = 140 l/min, p_{max} = 350 bar
pilot operated, poppet type, switching solenoid
Type series: WR22G_CA-10...

- Screw-in cartridge valve
- For cavity DC
- All external parts with zinc-nickel plating according to DIN EN ISO 19598
- Installation in threaded port body type DC-12
- Seat tight shut-off
- No external pilot drain required
- Reliable switching, even after long dwell times
- Also available as stack valve
- The slip-on coil can be rotated, and it can be replaced without opening the hydraulic envelope
- High pressure wet-armature solenoids
- Various plug-connector systems and voltages are available

Phase-Out

Description

The 2-way/2-position solenoid operated spool valves, series WR22_C... are size 10, two stage, screw-in valves with an M24×1.5 mounting thread. The main stage as well as the pilot stage are designed on the proven poppet seat design, which ensures that the cartridges are leak-tight from B to A. The straightforward design delivers an outstanding price/performance ratio and good pressure loss/volume flow ratings. All external parts of the screw-in valves are zinc-nickel plated and are thus suitable for use in the harshest operating environments. The slip-on coils can be replaced without opening the hydraulic envelope and can be positioned at any angle through 360°. These valves are used in mobile and industrial applications where leak-tight shutoff functions are crucially important. Examples are where loads, tensions, or clamping forces must be held without leakage. For self-assembly, please refer to the section related data sheets.

Symbol

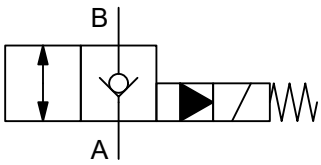

Technical data

General characteristics	Description, value, unit
Product status	Phase-Out
Alternative product	WRV_22G-10F-_A... (400-P-131210)
Function group	Directional valve
Function	2-way/2-position
Design	Screw-in cartridge valve
Controls	switching solenoid
Characteristic	pilot operated, poppet type
Construction size	NG 10
Thread size	M24×1,5
Mounting attitude	unrestricted
Weight	0.50 kg
Cavity acc. factory standard	For cavity DC
Tightening torque steel	100 Nm
Tightening torque aluminium	100 Nm
Tightening torque tolerance	± 10 %
Minimum ambient temperature	- 25 °C
Maximum ambient temperature	+ 50 °C
Surface protection	All external parts with zinc-nickel plating according to DIN EN ISO 19598
Sealing material	see ordering code
Seal kit order number	NBR: DS-276-N / FKM: DS-276-V

Hydraulic characteristics	Description, value, unit
Maximum operating pressure	350 bar
Maximum flow rate	140 l/min
Flow direction	see symbol
Hydraulic fluid	HL and HLP mineral oil according to DIN 51 524; other fluids on request!
Minimum fluid temperature	- 25 °C
Maximum fluid temperature	+ 80 °C
Viscosity range	10 ... 500 mm^2/s (cSt)
Recommended viscosity range	15 ... 250 mm^2/s (cSt)
Minimum fluid cleanliness (cleanlineless class according to ISO 4406:1999)	class 20/18/15

NOTE!
The switching safety of the valve is achieved by the volume flow and pressure drop (Δp).

Electric characteristics	Description, value, unit
Actuator type	solenoid coil
Solenoid coils type	D36
Supply voltage DC	12/24 V DC
Supply voltage AC	115/230 (50 ... 60 Hz) V AC
Supply voltage tolerance	± 10 %

Phase-Out

WWW.SUMY.IR

Electric characteristics	Description, value, unit
Nominal power consumption	Version "E": V DC = 17 W / V AC = 17 W Version "N": V DC = 27 W / V AC = 25 W
Switching time	Version "E": 50...150 ms (energized) / 15...40 ms (de-energized) Version "N": 40...195 ms (energized) / 20...40 ms (de-energized)
Relative duty cycle	100 %
Electrical connection coil	several connection types available, see ordering code
Protection class solenoid coil to ISO 20 653 / EN 60 529	several classes of protection available, see ordering code (with appropriate mating connector and proper fitting and sealing)

NOTE!
The switching time can be strongly dependent on flow rate, pressure, oil viscosity and the dwell time under pressure. In practice, the switching time may therefore deviate from the specified value range.

Performance graphs

measured with oil viscosity 33.0 mm²/s (cSt), coil at steady-state temperature and 10 % undervoltage

p = f (Q) Performance limit

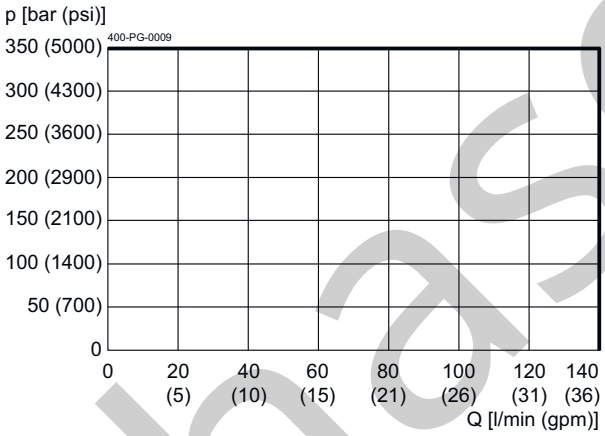

Δp = f (Q) Pressure drop-flow rate characteristic

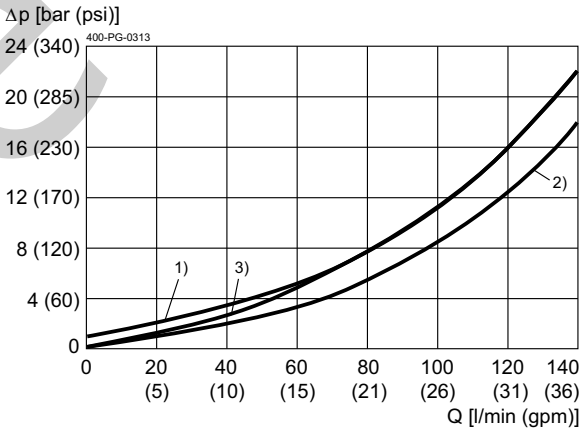

1) A → B, solenoid de-energizing
2) B → A, solenoid energizing
3) A → B, solenoid energizing

Phase-Out

Dimensions and sectional view

Beispiel für die Masseinheit:
Example for the dimensional units:

0.79 = 0.79 mm millimeter
(.031) = 0.031" inch

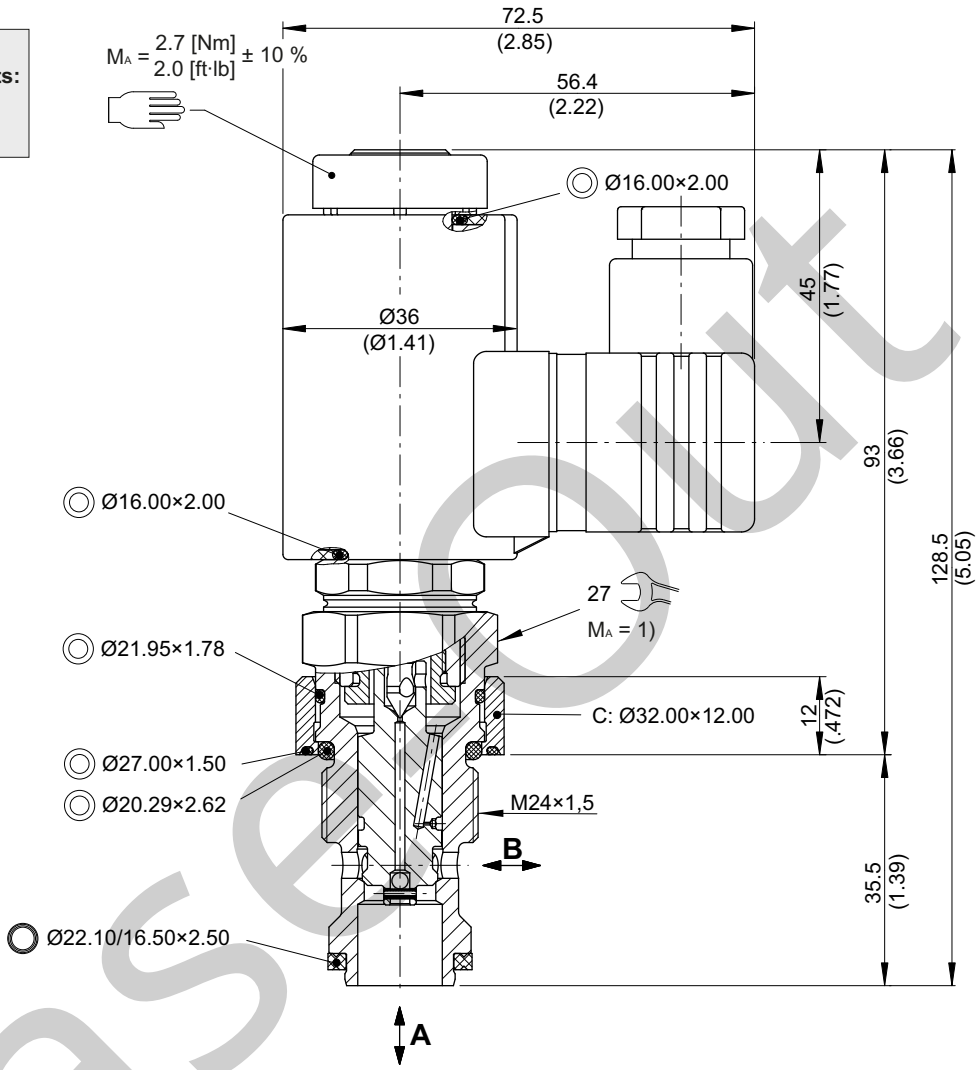

Installation information

NOTE!
1) When fitting the screw-in cartridge valve, use the specified tightening torque. The value can be found in the chapter "Technical data".

ATTENTION!
Only qualified personnel with mechanical skills may carry out any maintenance work. Generally, the only work that should ever be undertaken is to check, and possibly replace, the seals. When changing seals, oil or grease the new seals thoroughly before fitting them.

NOTE!
The seals are not available individually. The seal kit order number can be found in the chapter "Technical data".

Phase out

Ordering code

Ex. W R 22G E C A - 10 _ - 5 24 D - _

W	=	directional valve
R	=	check valve function, pilot operated
22G	=	2-way/2-position, normally closed
E	=	electrically operated, V DC = 17 W / V AC = 17 W *(standard)*
N	=	electrically operated, V DC = 27 W / V AC = 25 W
C	=	cavity type DC
A ... Q	=	standard model according to valid data sheet *(standard)*
Z ... R	=	special model after consultation
10	=	nominal size 10
(blank)	=	NBR (nitril-butadien-rubber / BUNA) seals *(standard)*
V	=	FKM (fluorocarbon rubber / VITON) seals *(special seals - please consult BUCHER)*
1 ... 9	=	technical design no. (omit when ordering)
...	=	voltage e.g. 24 (24 V)
D	=	current type DC
A	=	current type AC
(blank)	=	DIN EN 175301-803 connection, 3-pole 2 P+E with mating plug (IP 65) *(standard)*
M100	=	DIN EN 175301-803 connection, 3-pole 2 P+E
C	=	Kostal plug connection (IP 65)
JT	=	Junior Timer radial plug connection (with protection diode, IP 65)
IT	=	Junior Timer axial plug connection (with protection diode, IP 65)
D	=	Deutsch plug connection DT04-2P (IP 67/69K)
DT	=	Deutsch plug connection DT04-2P (with protection diode, IP 67/69K)
S	=	AMP Superseal 1.5 (IP 67) / Metri-Pack 150 (IP 65) plug connection
F	=	flying leads (500 mm)

mating plug not supplied

Related data sheets

Reference	Description
400-P-040011	Form tools
400-P-060111	Cavity DC
400-P-740101	Threaded port body DC-12
400-P-120110	Solenoid coil D36

Phase-Out

info.ch@bucherhydraulics.com www.bucherhydraulics.com

© 2025 by Bucher Hydraulics AG Frutigen, 3714 Frutigen, Switzerland

All rights reserved.
Data is provided for the purpose of product description only, and must not be construed as warranted characteristics in the legal sense. The information does not relieve users from the duty of conducting their own evaluations and tests. Because the products are subject to continual improvement, we reserve the right to amend the product specifications contained in this catalogue.

BUCHER hydraulics
WWW.SUMY.IR

General information
Cavity

Type series: DD

Dimensions and sectional view

Beispiel für die Masseinheit:
Example for the dimensional units:
0.79 = 0.79 mm millimeter

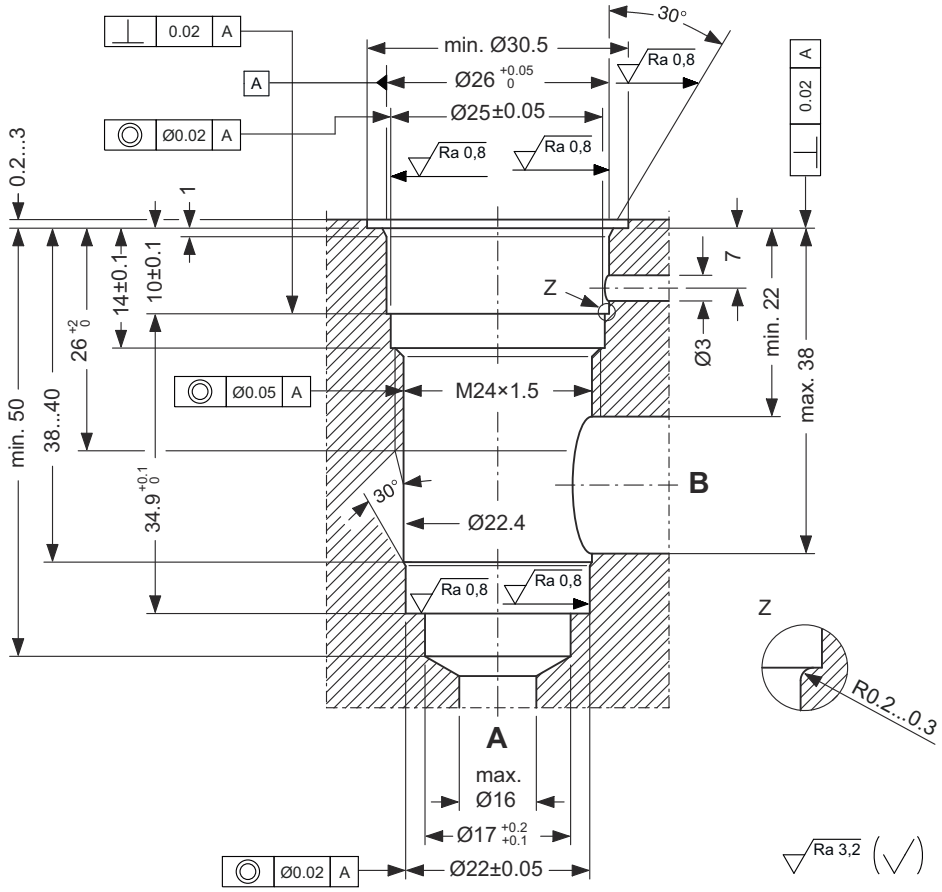

Installation information

ATTENTION!
You must maintain the specified positional and diametral tolerances. To ensure trouble-free operation of the screw-in cartridges, we strongly recommend that pilot drilling, boring, reaming and cavity thread-cutting are always performed in one setup.

NOTE!
Cavity type to factory standard.

NOTE!
We offer form tool sets for sale or hire. See data sheet 400-P-040011 for further information.

info.ch@bucherhydraulics.com **www.bucherhydraulics.com**

© 2025 by Bucher Hydraulics AG Frutigen, 3714 Frutigen, Switzerland

All rights reserved.
Data is provided for the purpose of product description only, and must not be construed as warranted characteristics in the legal sense. The information does not relieve users from the duty of conducting their own evaluations and tests. Because the products are subject to continual improvement, we reserve the right to amend the product specifications contained in this catalogue.

BUCHER hydraulics
WWW.SUMY.IR

Directional valve 2-way/2-position

Q_{max} = 140 l/min, p_{max} = 350 bar
pilot operated, poppet type, switching solenoid
Type series: WR22G_DA-10...

- Screw-in cartridge valve
- For cavity DD
- All external parts with zinc-nickel plating according to DIN EN ISO 19598
- Installation in threaded port body type DD-12
- Seat tight shut-off
- No external pilot drain required
- High flow rates
- The slip-on coil can be rotated, and it can be replaced without opening the hydraulic envelope
- High pressure wet-armature solenoids
- Various plug-connector systems and voltages are available

Phase-Out

Description

The 2-way/2-position solenoid operated spool valves, series WR22_D... are size 10, two stage, screw-in valves with an M24×1.5 mounting thread. The main stage as well as the pilot stage are designed on the proven poppet seat design, which ensures that the cartridges are leak-tight from B to A. The straightforward design delivers an outstanding price/performance ratio and good pressure loss/volume flow ratings. All external parts of the screw-in valves are zinc-nickel plated and are thus suitable for use in the harshest operating environments. The slip-on coils can be replaced without opening the hydraulic envelope and can be positioned at any angle through 360°. These valves are used in mobile and industrial applications where leak-tight shutoff functions are crucially important. Examples are where loads, tensions, or clamping forces must be held without leakage. For self-assembly, please refer to the section related data sheets.

Symbol

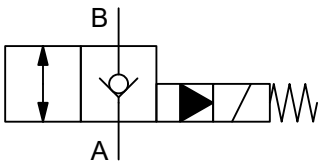

Technical data

General characteristics	Description, value, unit
Product status	Phase-Out
Alternative product	WRV_22G-10F-_A... (400-P-131210)
Function group	Directional valve
Function	2-way/2-position
Design	Screw-in cartridge valve
Controls	switching solenoid
Characteristic	pilot operated, poppet type
Construction size	NG 10
Thread size	M24×1,5
Mounting attitude	unrestricted
Weight	0.50 kg
Cavity acc. factory standard	For cavity DD
Tightening torque steel	65 Nm
Tightening torque aluminium	50 Nm
Tightening torque tolerance	± 10 %
Minimum ambient temperature	- 30 °C
Maximum ambient temperature	+ 50 °C
Surface protection	All external parts with zinc-nickel plating according to DIN EN ISO 19598
Sealing material	see ordering code
Seal kit order number	NBR: DS-276-N / FKM: DS-276-V

Hydraulic characteristics	Description, value, unit
Maximum operating pressure	350 bar
Maximum flow rate	140 l/min
Flow direction	see symbol
Hydraulic fluid	HL and HLP mineral oil according to DIN 51 524; other fluids on request!
Minimum fluid temperature	- 30 °C
Maximum fluid temperature	+ 80 °C
Viscosity range	10 ... 500 mm^2/s (cSt)
Recommended viscosity range	15 ... 250 mm^2/s (cSt)
Minimum fluid cleanliness (cleanlineless class according to ISO 4406:1999)	class 20/18/15

NOTE!
The switching safety of the valve is achieved by the volume flow and pressure drop (Δp).

Electric characteristics	Description, value, unit
Actuator type	solenoid coil
Solenoid coils type	D36
Supply voltage DC	12/24 V DC
Supply voltage AC	115/230 (50 ... 60 Hz) V AC
Supply voltage tolerance	± 10 %

Phase-Out

WWW.SUMY.IR

Electric characteristics	Description, value, unit
Nominal power consumption	Version "E": V DC = 17 W / V AC = 17 W Version "N": V DC = 27 W / V AC = 25 W
Switching time	Version "E": 50...150 ms (energized) / 15...40 ms (de-energized) Version "N": 40...195 ms (energized) / 20...40 ms (de-energized)
Relative duty cycle	100 %
Electrical connection coil	several connection types available, see ordering code
Protection class solenoid coil to ISO 20 653 / EN 60 529	several classes of protection available, see ordering code (with appropriate mating connector and proper fitting and sealing)

NOTE!
The switching time can be strongly dependent on flow rate, pressure, oil viscosity and the dwell time under pressure. In practice, the switching time may therefore deviate from the specified value range.

Performance graphs

measured with oil viscosity 33.0 mm²/s (cSt), coil at steady-state temperature and 10 % undervoltage

p = f (Q) Performance limit

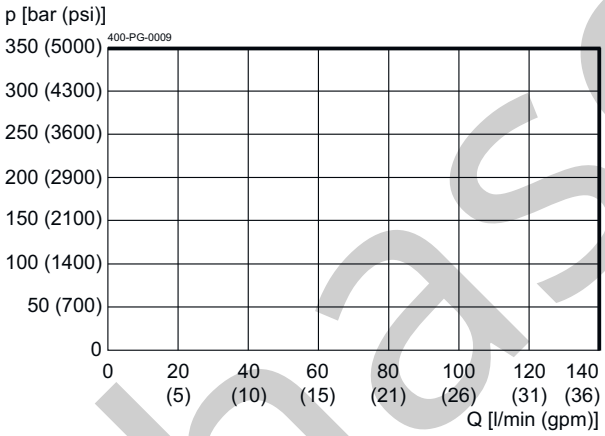

Δp = f (Q) Pressure drop-flow rate characteristic

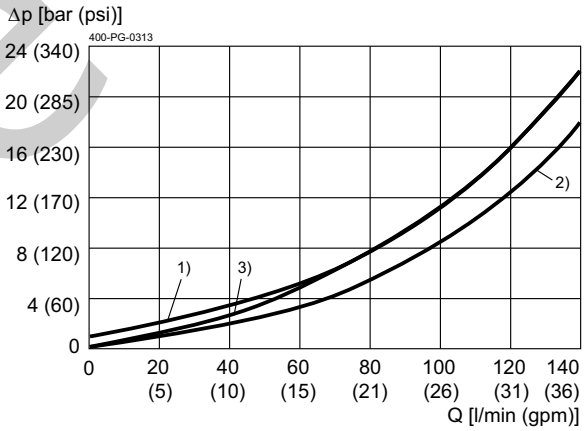

1) A → B, solenoid de-energizing
2) B → A, solenoid energizing
3) A → B, solenoid energizing

Phase-Out

Dimensions and sectional view

Beispiel für die Masseinheit:
Example for the dimensional units:

0.79 = 0.79 mm millimeter
(.031) = 0.031" inch

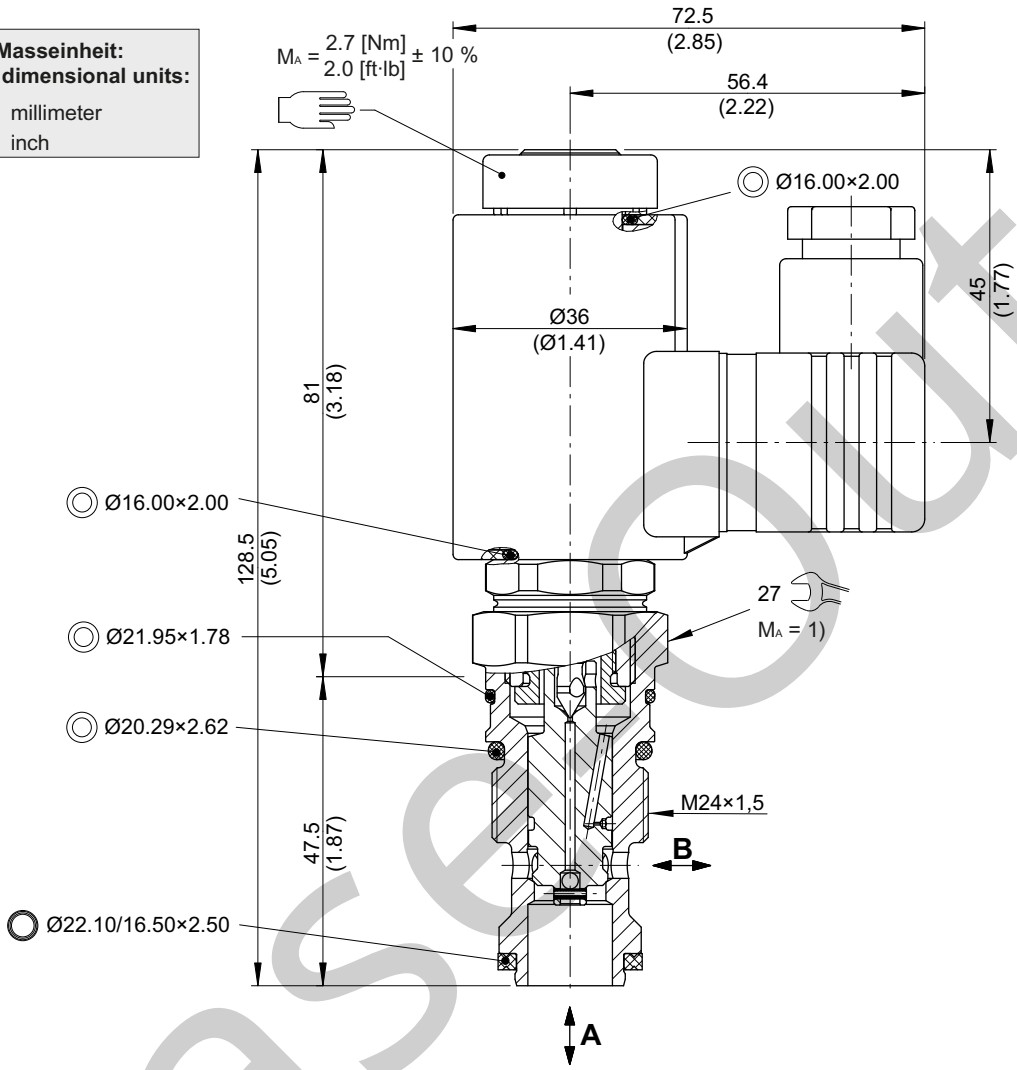

Installation information

NOTE!
1) When fitting the screw-in cartridge valve, use the specified tightening torque. The value can be found in the chapter "Technical data".

ATTENTION!
Only qualified personnel with mechanical skills may carry out any maintenance work. Generally, the only work that should ever be undertaken is to check, and possibly replace, the seals. When changing seals, oil or grease the new seals thoroughly before fitting them.

NOTE!
The seals are not available individually. The seal kit order number can be found in the chapter "Technical data".

Phase out

Ordering code

Ex. W R 22G E D A - 10 _ - 5 24 D - _

W	=	directional valve
R	=	check valve function, pilot operated
22G	=	2-way/2-position, normally closed
E	=	electrically operated, V DC = 17 W / V AC = 17 W *(standard)*
N	=	electrically operated, V DC = 27 W / V AC = 25 W
D	=	cavity type DD
A ... Q	=	standard model according to valid data sheet *(standard)*
Z ... R	=	special model after consultation
10	=	nominal size 10
(blank)	=	NBR (nitril-butadien-rubber / BUNA) seals *(standard)*
V	=	FKM (fluorocarbon rubber / VITON) seals *(special seals - please consult BUCHER)*
1 ... 9	=	technical design no. (omit when ordering)
...	=	voltage e.g. 24 (24 V)
D	=	current DC
A	=	current AC
(blank)	=	DIN EN 175301-803 connection, 3-pole 2 P+E with mating plug (IP 65) *(standard)*
M100	=	DIN EN 175301-803 connection, 3-pole 2 P+E
C	=	Kostal plug connection (IP 65)
JT	=	Junior Timer radial plug connection (with protection diode, IP 65)
IT	=	Junior Timer axial plug connection (with protection diode, IP 65)
D	=	Deutsch plug connection DT04-2P (IP 67/69K)
DT	=	Deutsch plug connection DT04-2P (with protection diode, IP 67/69K)
S	=	AMP Superseal 1.5 (IP 67) / Metri-Pack 150 (IP 65) plug connection
F	=	flying leads (500 mm)

mating plug not supplied

Related data sheets

Reference	Description
400-P-040011	Form tools
400-P-060121	Cavity DD
400-P-740111	Threaded port body DD-12
400-P-120110	Solenoid coil D36

Phase-Out

info.ch@bucherhydraulics.com www.bucherhydraulics.com

© 2025 by Bucher Hydraulics AG Frutigen, 3714 Frutigen, Switzerland

All rights reserved.
Data is provided for the purpose of product description only, and must not be construed as warranted characteristics in the legal sense. The information does not relieve users from the duty of conducting their own evaluations and tests. Because the products are subject to continual improvement, we reserve the right to amend the product specifications contained in this catalogue.

BUCHER
hydraulics
WWW.SUMY.IR

General information
Cavity

Type series: BH/C0820

Dimensions and sectional view

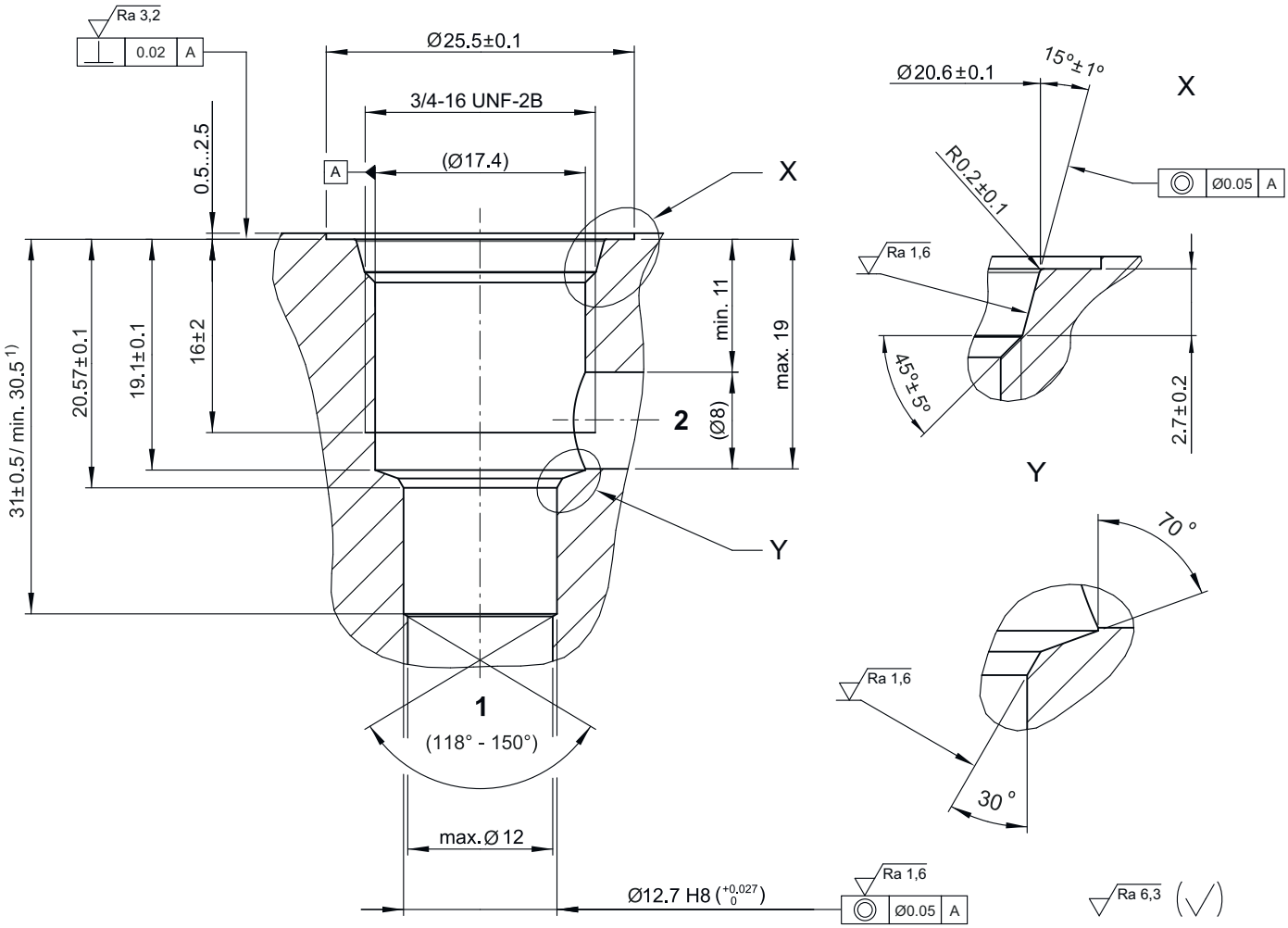

HINWEIS!
NOTE!

1) Passungstiefe
Minimum depth of specified diametral tolerance

Beispiel für die Masseinheit:
Example for the dimensional units:

0.79 = 0.79 mm millimeter

WWW.SUMY.IR

Installation information

ATTENTION!
You must maintain the specified positional and diametral tolerances. To ensure trouble-free operation of the screw-in cartridges, we strongly recommend that pilot drilling, boring, reaming and cavity thread-cutting are always performed in one setup.

NOTE!
Cavity type to factory standard.

NOTE!
We offer form tool sets for sale or hire. See data sheet 400-P-040011 for further information.

info.ch@bucherhydraulics.com **www.bucherhydraulics.com**

© 2025 by Bucher Hydraulics AG Frutigen, 3714 Frutigen, Switzerland

All rights reserved.
Data is provided for the purpose of product description only, and must not be construed as warranted characteristics in the legal sense. The information does not relieve users from the duty of conducting their own evaluations and tests. Because the products are subject to continual improvement, we reserve the right to amend the product specifications contained in this catalogue.

BUCHER hydraulics

WWW.SUMY.IR

Directional valve 2-way/2-position

Q_{max} = 40 l/min, p_{max} = 350 bar
switching solenoid, pilot operated, poppet type
Type series: WRVE22G-5H-_A...

- Screw-in cartridge valve
- For cavity BH/C0820
- All external parts with zinc-nickel plating according to DIN EN ISO 19598
- Fits common cavity according to ISO and NFPA
- Reliable switching, even after long dwell times
- Low head loss
- Seat tight shut-off
- Installation in threaded port body type GHB-38
- The slip-on coil can be rotated, and it can be replaced without opening the hydraulic envelope
- High pressure wet-armature solenoids
- Various plug-connector systems and voltages are available

Description

The 2-way/2-position solenoid-operated directional seat valves, series WRVE22G..., are NG 5 / SAE 08, two stage, pressure balanced screw-in valves with a 3/4-16 UNF-2A mounting thread. The main and pilot stages are both designed on the poppet/seat principle, and the 2 to 1 flow path is therefore virtually leak-free. The straightforward design delivers a good price/performance ratio and outstanding head loss/ flow ratings. All external parts of the screw-in valves are zinc-nickel plated, and are thus suitable for use in the harshest operating environments. The slip-on coils can be replaced without opening the hydraulic envelope and can be positioned at any angle through 360°. These valves are primarily used as pilot valves in certain mobile and industrial applications where leak-tight shut-off functions are crucially important. Examples are where loads, tensions, or clamping forces must be held without leakage. For self-assembly, please refer to the section related data sheets.

Symbol

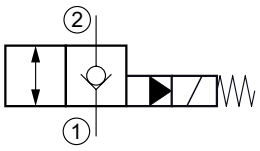

Technical data

General characteristics	Description, value, unit
Function group	Directional valve
Function	2-way/2-position
Design	Screw-in cartridge valve
Controls	switching solenoid
Characteristic	pilot operated, poppet type
MTTFd value	150 years
Construction size	NG 5 / SAE 08
Thread size	3/4-16 UNF-2A
Mounting attitude	unrestricted
Weight	0.45 kg
Cavity acc. ISO	fits into ISO 17209: 3/4-01-0-13
Cavity acc. NFPA	fits into NFPA/T3.5.50: 0.750-01-0-09
Cavity acc. factory standard	For cavity BH/C0820
Tightening torque steel	50 Nm
Tightening torque aluminium	50 Nm
Tightening torque tolerance	± 10 %
Minimum ambient temperature	- 25 °C
Maximum ambient temperature	+ 50 °C
Surface protection	All external parts with zinc-nickel plating according to DIN EN ISO 19598
Sealing material	see ordering code
Seal kit order number	NBR: DS-502-N / FKM: DS-502-V

Hydraulic characteristics	Description, value, unit
Maximum operating pressure	350 bar
Maximum flow rate	40 l/min
Flow direction	see symbol
Hydraulic fluid	HL and HLP mineral oil according to DIN 51 524; other fluids on request!
Minimum fluid temperature	- 25 °C
Maximum fluid temperature	+ 80 °C
Viscosity range	10 ... 500 mm^2/s (cSt)
Recommended viscosity range	15 ... 250 mm^2/s (cSt)
Minimum fluid cleanliness (cleanlineless class according to ISO 4406:1999)	class 20/18/15

NOTE!
The switching safety of the valve is achieved by the volume flow and pressure drop (Δp).

Electric characteristics	Description, value, unit
Actuator type	solenoid coil
Solenoid coils type	D36
Supply voltage DC	12/24 V DC
Supply voltage AC	115/230 (50 ... 60 Hz) V AC
Supply voltage tolerance	± 10 %
Maximum permissible power consumption	17 W
Switching time	Switching time measured at: U_N: Δp = 300 bar; Q = 30 l/min; $T_{Ambient}$ = 20 °C; ϑ = 46 mm2/s) 25 ms (energizing) 100 ms (de-energizing)
Relative duty cycle	100 %
Electrical connection coil	several connection types available, see ordering code
Protection class solenoid coil to ISO 20 653 / EN 60 529	several classes of protection available, see ordering code (with appropriate mating connector and proper fitting and sealing)

NOTE!
The switching time can be strongly dependent on flow rate, pressure, oil viscosity and the dwell time under pressure. In practice, the switching time may therefore deviate from the specified value range.

Performance graphs

measured with oil viscosity 33.0 mm²/s (cSt), coil at steady-state temperature and 10 % undervoltage

p = f (Q) Performance limit

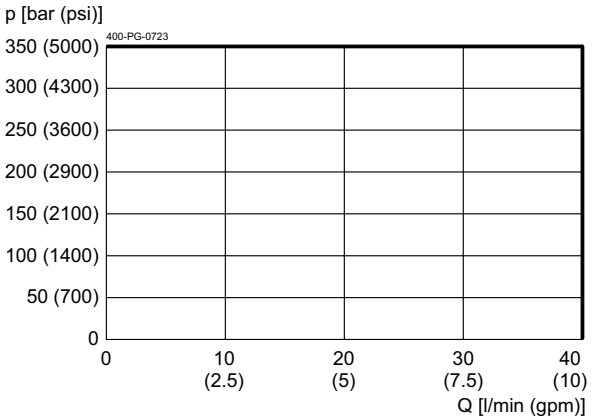

Δp = f (Q) Pressure drop-flow rate characteristic

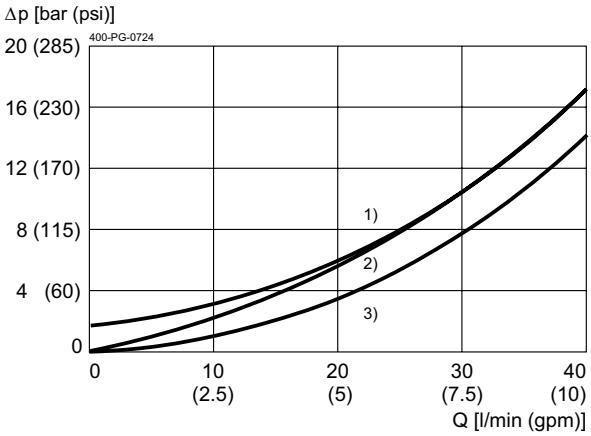

1) 1 → 2, solenoid de-energized
2) 1 → 2, solenoid energized
3) 2 → 1, solenoid energized

Dimensions and sectional view

Beispiel für die Masseinheit:
Example for the dimensional units:

0.79 = 0.79 mm millimeter
(.031) = 0.031" inch

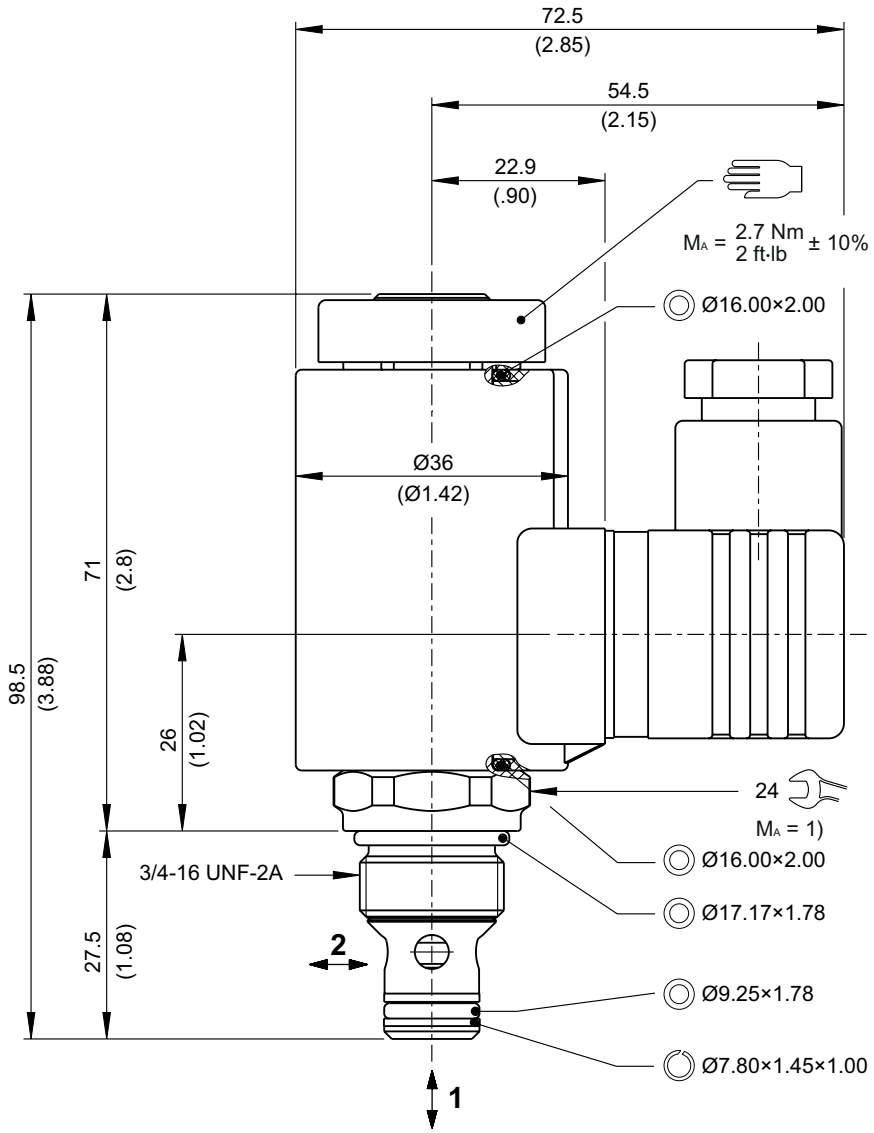

Installation information

NOTE!
1) When fitting the screw-in cartridge valve, use the specified tightening torque. The value can be found in the chapter "Technical data".

NOTE!
The seals are not available individually. The seal kit order number can be found in the chapter "Technical data".

ATTENTION!
Only qualified personnel with mechanical skills may carry out any maintenance work. Generally, the only work that should ever be undertaken is to check, and possibly replace, the seals. When changing seals, oil or grease the new seals thoroughly before fitting them.

Ordering code

Ex. W R V E 22G - 5 H - N A 1 24 _ _

W = directional valve
R = check valve function (seat-valve shut-off)
V = pilot operated
E = electrically operated, V DC = 17 W / V AC = 17 W
22G = 2-way/2-position, normally closed
5 = nominal size 5 / SAE 08
F = cavity type BH/C0820
(blank) = NBR (nitril-butadien-rubber / BUNA) seals **(standard)**
V = FKM (fluorocarbon rubber / VITON) seals
(special seals - please contact BUCHER)
A ... Q = standard model according to valid data sheet
Z ... R = special model after consultation
1 ... 9 = technical design no. *(omit when ordering)*
... = voltage e. g. 24 (24 V)
D = current DC
A = current AC
(blank) = DIN EN 175301-803 connection, 3-pole 2 P+E with mating plug, IP 65 **(standard)**
M100 = DIN EN 175301-803 connection, 3-pole 2 P+E
C = Kostal plug connection (IP 65)
JT = Junior Timer radial plug connection (with protection diode, IP 65)
IT = Junior Timer axial plug connection (with protection diode, IP 65)
D = Deutsch plug connection 45º DT04-2P (IP 67/69K)
DT = Deutsch plug connection 45º DT04-2P (with protection diode, IP 67/69K)
S = AMP Superseal 1.5 (IP 67) / Metri-Pack 150 (IP 65) plug connection
F = flying leads (500 mm)

mating plug not supplied

Related data sheets

Reference	Description
400-P-040011	Form tools
400-P-120110	Solenoid coil D36
400-P-040401	Cavity BH/C0820
400-P-738571	Threaded port body GBH-38...
400-P-010101	MTTFD Values for Hydraulic Valves

info.ch@bucherhydraulics.com **www.bucherhydraulics.com**

© 2023 by Bucher Hydraulics AG Frutigen, 3714 Frutigen, Switzerland

All rights reserved.
Data is provided for the purpose of product description only, and must not be construed as warranted characteristics in the legal sense. The information does not relieve users from the duty of conducting their own evaluations and tests. Because the products are subject to continual improvement, we reserve the right to amend the product specifications contained in this catalogue.

BUCHER hydraulics

WWW.SUMY.IR

Directional valve 2-way/2-position

Q_{max} = 40 l/min, p_{max} = 350 bar
switching solenoid, pilot operated, poppet type
Type series: WRVE22L-5H-_A...

- Screw-in cartridge valve
- For cavity BH/C0820
- All external parts with zinc-nickel plating according to DIN EN ISO 19598
- Low head loss
- Fits common cavity according to ISO and NFPA
- Reliable switching, even after long dwell times
- Low head loss
- Seat tight shut-off
- Installation in threaded port body type GHB-38
- The slip-on coil can be rotated, and it can be replaced without opening the hydraulic envelope
- High pressure wet-armature solenoids
- Various plug-connector systems and voltages are available

Description

The 2-way/2-position solenoid-operated directional seat valves, series WRVE22L..., are NG 5 / SAE 08, two stage, pressure balanced screw-in valves with a 3/4-16 UNF-2A mounting thread. The main and pilot stages are both designed on the poppet/seat principle, and the 2 to 1 flow path is therefore virtually leak-free. This valve type is constructively designed for minimal head loss, thus the flow direction is possible only in one direction (2 to 1). The straightforward design delivers a good price/performance ratio and outstanding head loss/ flow ratings. All external parts of the screw-in valves are zinc-nickel plated, and are thus suitable for use in the harshest operating environments. The slipon coils can be replaced without opening the hydraulic envelope and can be positioned at any angle through 360°. These valves are primarily used as pilot valves in certain mobile and industrial applications where leak-tight shut-off functions are crucially important. Examples are where loads, tensions, or clamping forces must be held without leakage. For self-assembly, please refer to the section related data sheets.

Symbol

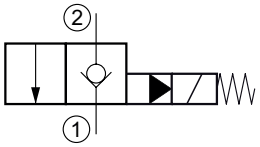

Technical data

General characteristics	Description, value, unit
Function group	Directional valve
Function	2-way/2-position
Design	Screw-in cartridge valve
Controls	switching solenoid
Characteristic	pilot operated, poppet type
MTTFd value	150 years
Construction size	NG 5 / SAE 08
Thread size	3/4-16 UNF-2A
Mounting attitude	unrestricted
Weight	0.40 kg
Cavity acc. ISO	fits into ISO 17209: 3/4-01-0-13
Cavity acc. NFPA	fits into NFPA/T3.5.50: 0.750-01-0-09
Cavity acc. factory standard	For cavity BH/C0820
Tightening torque steel	50 Nm
Tightening torque aluminium	50 Nm
Tightening torque tolerance	± 10 %
Minimum ambient temperature	- 25 °C
Maximum ambient temperature	+ 50 °C
Surface protection	All external parts with zinc-nickel plating according to DIN EN ISO 19598
Sealing material	see ordering code
Seal kit order number	NBR: DS-502-N / FKM: DS-502-V

Hydraulic characteristics	Description, value, unit
Maximum operating pressure	350 bar
Maximum flow rate	40 l/min
Flow direction	see symbol
Hydraulic fluid	HL and HLP mineral oil according to DIN 51 524; other fluids on request!
Minimum fluid temperature	- 25 °C
Maximum fluid temperature	+ 80 °C
Viscosity range	10 ... 500 mm^2/s (cSt)
Recommended viscosity range	15 ... 250 mm^2/s (cSt)
Minimum fluid cleanliness (cleanlineless class according to ISO 4406:1999)	class 20/18/15

ATTENTION!
Volume flow direction 1 to 2 not allowed.

NOTE!
The switching safety of the valve is achieved by the volume flow and pressure drop (Δp).

Electric characteristics	Description, value, unit
Actuator type	solenoid coil
Solenoid coils type	D36
Supply voltage DC	12/24 V DC
Supply voltage AC	115/230 (50 ... 60 Hz) V AC
Supply voltage tolerance	± 10 %
Maximum permissible power consumption	17 W
Switching time	Switching time measured at: U_N; Δp = 300 bar; Q = 30 l/min; $T_{Ambient}$ = 20 °C; ϑ = 46 mm2/s) 25 ms (energizing) 105 ms (de-energizing)
Relative duty cycle	100 %
Electrical connection coil	several connection types available, see ordering code
Protection class solenoid coil to ISO 20 653 / EN 60 529	several classes of protection available, see ordering code (with appropriate mating connector and proper fitting and sealing)

NOTE!
The switching time can be strongly dependent on flow rate, pressure, oil viscosity and the dwell time under pressure. In practice, the switching time may therefore deviate from the specified value range.

Performance graphs

measured with oil viscosity 33.0 mm²/s (cSt), coil at steady-state temperature and 10 % undervoltage

p = f (Q) Performance limit

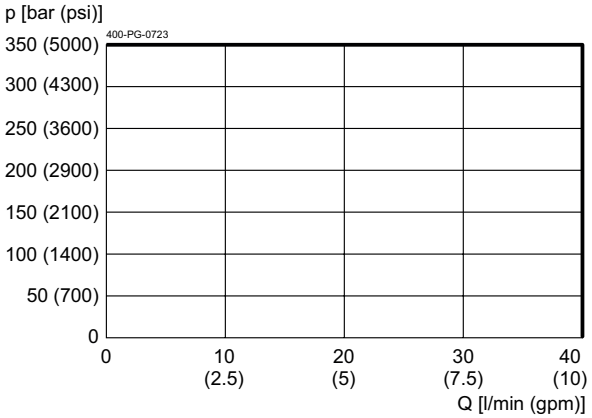

Δp = f (Q) Pressure drop-flow rate characteristic

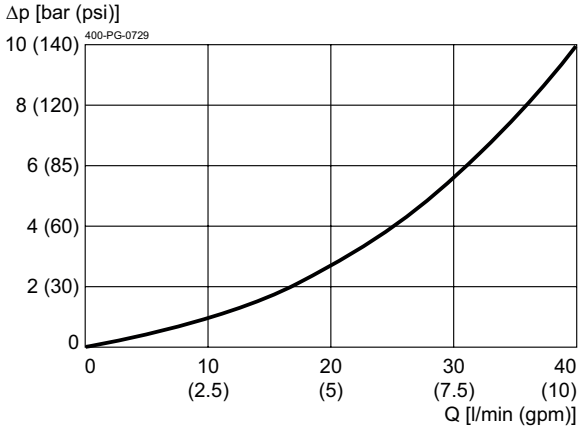

2 → 1 solenoid energized

Dimensions and sectional view

Beispiel für die Masseinheit:
Example for the dimensional units:

0.79 = 0.79 mm millimeter
(.031) = 0.031" inch

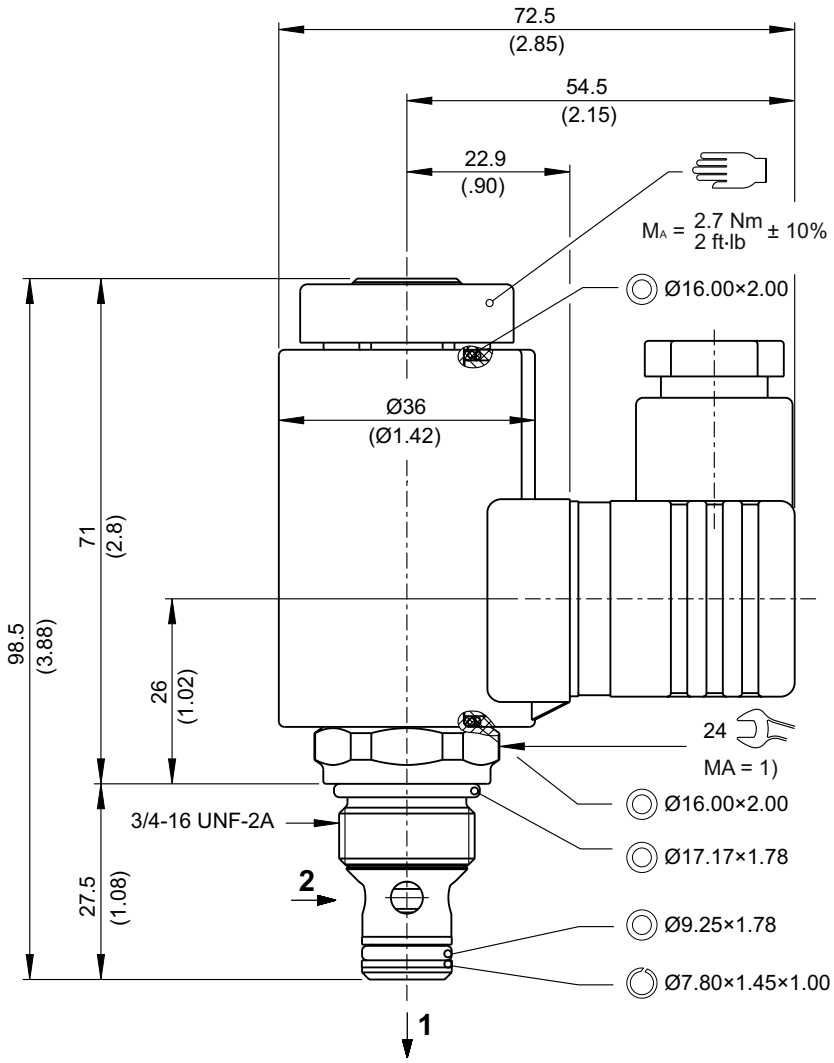

Installation information

NOTE!
1) When fitting the screw-in cartridge valve, use the specified tightening torque. The value can be found in the chapter "Technical data".

NOTE!
The seals are not available individually. The seal kit order number can be found in the chapter "Technical data".

ATTENTION!
Only qualified personnel with mechanical skills may carry out any maintenance work. Generally, the only work that should ever be undertaken is to check, and possibly replace, the seals. When changing seals, oil or grease the new seals thoroughly before fitting them.

Ordering code

Ex. W R V E 22L - 5 H - N A 1 24 _ _

W = directional valve
R = check valve function (seat-valve shut-off)
V = pilot operated
E = electrically operated, V DC = 17 W / V AC = 17 W
22L = 2-way/2-position, normally closed, flow only from 2 to 1
5 = nominal size 5 / SAE 08
F = cavity type BH/C0820
(blank) = NBR (nitril-butadien-rubber / BUNA) seals **(standard)**
V = FKM (fluorocarbon rubber / VITON) seals
(special seals - please contact BUCHER)
A ... Q = standard model according to valid data sheet
Z ... R = special model after consultation
1 ... 9 = technical design no. *(omit when ordering)*
... = voltage e. g. 24 (24 V)
D = current DC
A = current AC
(blank) = DIN EN 175301-803 connection, 3-pole 2 P+E with mating plug, IP 65 **(standard)**
M100 = DIN EN 175301-803 connection, 3-pole 2 P+E
C = Kostal plug connection (IP 65)
JT = Junior Timer radial plug connection (with protection diode, IP 65)
IT = Junior Timer axial plug connection (with protection diode, IP 65)
D = Deutsch plug connection 45º DT04-2P (IP 67/69K)
DT = Deutsch plug connection 45º DT04-2P (with protection diode, IP 67/69K)
S = AMP Superseal 1.5 (IP 67) / Metri-Pack 150 (IP 65) plug connection
F = flying leads (500 mm)

} mating plug not supplied

Related data sheets

Reference	Description
400-P-040011	Form tools
400-P-120110	Solenoid coil D36
400-P-040401	Cavity BH/C0820
400-P-738571	Threaded port body GBH-38...
400-P-010101	MTTFD Values for Hydraulic Valves

info.ch@bucherhydraulics.com **www.bucherhydraulics.com**

© 2023 by Bucher Hydraulics AG Frutigen, 3714 Frutigen, Switzerland

All rights reserved.
Data is provided for the purpose of product description only, and must not be construed as warranted characteristics in the legal sense. The information does not relieve users from the duty of conducting their own evaluations and tests. Because the products are subject to continual improvement, we reserve the right to amend the product specifications contained in this catalogue.

BUCHER hydraulics

WWW.SUMY.IR

Directional valve 2-way/2-position

Q_{max} = 40 l/min, p_{max} = 350 bar
switching solenoid, pilot operated, poppet type
Type series: WRVE22K-5H-_-_A...

- Screw-in cartridge valve
- For cavity BH/C0820
- All external parts with zinc-nickel plating according to DIN EN ISO 19598
- Fits common cavity according to ISO and NFPA
- Low head loss
- Seat tight shut-off
- Optional with manual override
- Installation in threaded port body type GHB-38
- The slip-on coil can be rotated, and it can be replaced without opening the hydraulic envelope
- High pressure wet-armature solenoids
- Various plug-connector systems and voltages are available

Description

The 2-way/2-position solenoid-operated directional seat valves, series WRVE22K..., are NG 5 / SAE 08, two stage, pressure balanced screw-in valves with a 3/4-16 UNF-2A mounting thread. The main and pilot stages are both designed on the poppet/seat principle, and the 2 to 1 flow path is therefore virtually leak-free. This valve type is constructively designed for minimal head loss, thus the flow direction is possible only in one direction (2 to 1). The straightforward design delivers a good price/performance ratio and outstanding head loss/ flow ratings. All external parts of the screw-in valves are zinc-nickel plated, and are thus suitable for use in the harshest operating environments. The slipon coils can be replaced without opening the hydraulic envelope and can be positioned at any angle through 360°. These valves are primarily used as pilot valves in certain mobile and industrial applications where leak-tight shut-off functions are crucially important. Examples are where loads, tensions, or clamping forces must be held without leakage. For self-assembly, please refer to the section related data sheets.

Symbol

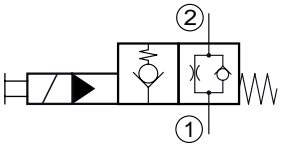

Technical data

General characteristics	Description, value, unit
Function group	Directional valve
Function	2-way/2-position
Design	Screw-in cartridge valve
Controls	switching solenoid
Characteristic	pilot operated, poppet type
MTTFd value	150 years
Construction size	NG 5 / SAE 08
Thread size	3/4-16 UNF-2A
Mounting attitude	unrestricted
Weight	0.44 kg
Cavity acc. ISO	fits into ISO 17209: 3/4-01-0-13
Cavity acc. NFPA	fits into NFPA/T3.5.50: 0.750-01-0-09
Cavity acc. factory standard	For cavity BH/C0820
Tightening torque steel	50 Nm
Tightening torque aluminium	50 Nm
Tightening torque tolerance	± 10 %
Minimum ambient temperature	- 25 °C
Maximum ambient temperature	+ 50 °C
Surface protection	All external parts with zinc-nickel plating according to DIN EN ISO 19598
Sealing material	see ordering code
Seal kit order number	NBR: DS-502-N / FKM: DS-502-V

Hydraulic characteristics	Description, value, unit
Maximum operating pressure	350 bar
Maximum flow rate	40 l/min
Flow direction	see symbol
Hydraulic fluid	HL and HLP mineral oil according to DIN 51 524; other fluids on request!
Minimum fluid temperature	- 25 °C
Maximum fluid temperature	+ 80 °C
Viscosity range	10 ... 500 mm^2/s (cSt)
Recommended viscosity range	15 ... 250 mm^2/s (cSt)
Minimum fluid cleanliness (cleanlineless class according to ISO 4406:1999)	class 20/18/15

ATTENTION!
Volume flow direction 1 to 2 not allowed.

NOTE!
The switching safety of the valve is achieved by the volume flow and pressure drop (Δp).

Electric characteristics	Description, value, unit
Actuator type	solenoid coil
Solenoid coils type	D36
Supply voltage DC	12/24 V DC
Supply voltage AC	115/230 (50 ... 60 Hz) V AC
Supply voltage tolerance	± 10 %
Maximum permissible power consumption	17 W
Switching time	Switching time measured at: U_N; Δp = 300 bar; Q = 30 l/min; $T_{Ambient}$ = 20 °C; ϑ = 46 mm2/s) 70 ms (energizing) 20 ms (de-energizing)
Relative duty cycle	100 %
Electrical connection coil	several connection types available, see ordering code
Protection class solenoid coil to ISO 20 653 / EN 60 529	several classes of protection available, see ordering code (with appropriate mating connector and proper fitting and sealing)

NOTE!
The switching time can be strongly dependent on flow rate, pressure, oil viscosity and the dwell time under pressure. In practice, the switching time may therefore deviate from the specified value range.

Performance graphs

measured with oil viscosity 33.0 mm²/s (cSt), coil at steady-state temperature and 10 % undervoltage

p = f (Q) Performance limit

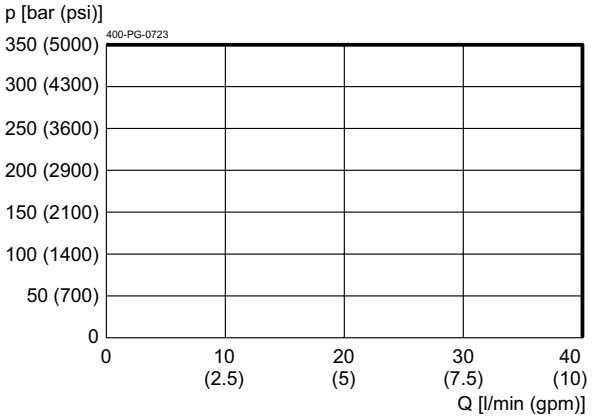

Δp = f (Q) Pressure drop-flow rate characteristic

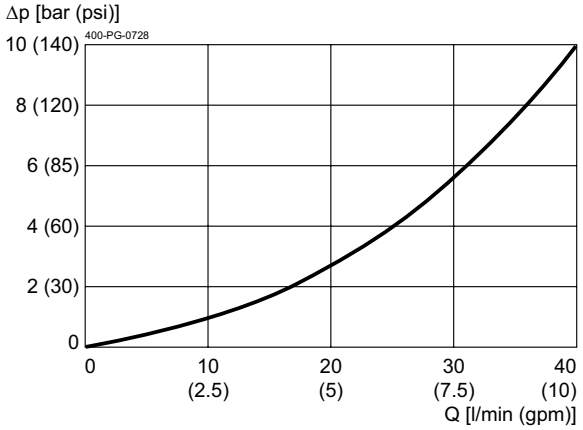

2 →1 solenoid energized

Dimensions and sectional view

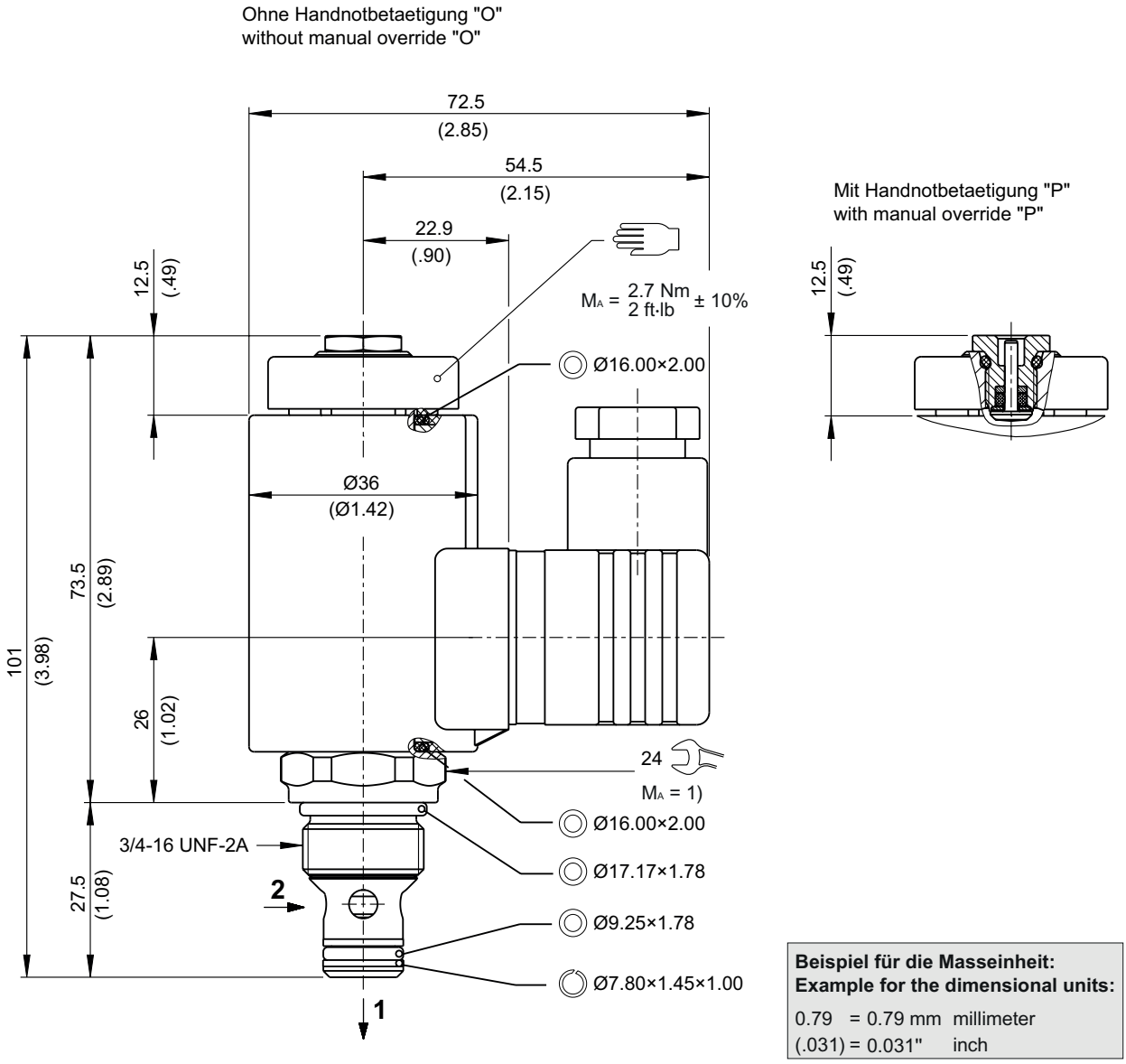

Installation information

NOTE!
1) When fitting the screw-in cartridge valve, use the specified tightening torque. The value can be found in the chapter "Technical data".

NOTE!
The seals are not available individually. The seal kit order number can be found in the chapter "Technical data".

ATTENTION!
Only qualified personnel with mechanical skills may carry out any maintenance work. Generally, the only work that should ever be undertaken is to check, and possibly replace, the seals. When changing seals, oil or grease the new seals thoroughly before fitting them.

Ordering code

z. B. W R V E 22K - 5 H - _ - N A 1 24 _ _

W = directional valve
R = check valve function (seat-valve shut-off)
V = pilot operated
E = electrically operated, V DC = 17 W / V AC = 17 W
22K = 2-way/2-position, normally open, flow only from 2 to 1
5 = nominal size 5 / SAE 08
H = cavity type BH/C0820
O = without manual override
P = with manual override
(blank) = NBR (nitril-butadien-rubber / BUNA) seals **(standard)**
V = FKM (fluorocarbon rubber / VITON) seals
(special seals - please contact BUCHER)
A ... Q = standard model according to valid data sheet
Z ... R = special model after consultation
1 ... 9 = technical design no. *(omit when ordering)*
... = voltage e. g. 24 (24 V)
D = current DC
A = current AC
(blank) = DIN EN 175301-803 connection, 3-pole 2 P+E with mating plug, IP 65 **(standard)**
M100 = DIN EN 175301-803 connection, 3-pole 2 P+E
C = Kostal plug connection (IP 65)
JT = Junior Timer radial plug connection (with protection diode, IP 65)
IT = Junior Timer axial plug connection (with protection diode, IP 65)
D = Deutsch plug connection 45° DT04-2P (IP 67/69K)
DT = Deutsch plug connection 45° DT04-2P (with protection diode, IP 67/69K)
S = AMP Superseal 1.5 (IP 67) / Metri-Pack 150 (IP 65) plug connection
F = flying leads (500 mm)

} mating plug not supplied

Related data sheets

Reference	Description
400-P-040011	Form tools
400-P-120110	Solenoid coil D36
400-P-040401	Cavity BH/C0820
400-P-738571	Threaded port body GBH-38...
400-P-010101	MTTFD Values for Hydraulic Valves

info.ch@bucherhydraulics.com **www.bucherhydraulics.com**

© 2023 by Bucher Hydraulics AG Frutigen, 3714 Frutigen, Switzerland

All rights reserved.
Data is provided for the purpose of product description only, and must not be construed as warranted characteristics in the legal sense. The information does not relieve users from the duty of conducting their own evaluations and tests. Because the products are subject to continual improvement, we reserve the right to amend the product specifications contained in this catalogue.

BUCHER hydraulics

WWW.SUMY.IR

Directional valve 2-way/2-position

Q_{max} = 40 l/min, p_{max} = 350 bar
switching solenoid, pilot operated, poppet type
Type series: WRVE22O-5H-_-_A...

- Screw-in cartridge valve
- For cavity BH/C0820
- All external parts with zinc-nickel plating according to DIN EN ISO 19598
- Fits common cavity according to ISO and NFPA
- Reliable switching, even after long dwell times
- Seat tight shut-off
- Optional with manual override
- Installation in threaded port body type GHB-38
- The slip-on coil can be rotated, and it can be replaced without opening the hydraulic envelope
- High pressure wet-armature solenoids
- Various plug-connector systems and voltages are available

Description

The 2-way/2-position solenoid-operated directional seat valves, series WRVE22O..., are NG 5 / SAE 08, two stage, pressure balanced screw-in valves with a 3/4-16 UNF-2A mounting thread. The main and pilot stages are both designed on the poppet/seat principle, and the 2 to 1 flow path is therefore virtually leak-free. The function “de-energized open” is available. The straightforward design delivers a good price/performance ratio and outstanding head loss/ flow ratings. All external parts of the screw-in valves are zinc-nickel plated, and are thus suitable for use in the harshest operating environments. The slip-on coils can be replaced without opening the hydraulic envelope and can be positioned at any angle through 360°. These valves are primarily used as pilot valves in certain mobile and industrial applications where leak-tight shut-off functions are crucially important. Examples are where loads, tensions, or clamping forces must be held without leakage. For self-assembly, please refer to the section related data sheets.

Symbol

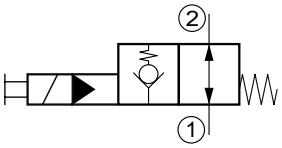

Technical data

General characteristics	Description, value, unit
Function group	Directional valve
Function	2-way/2-position
Design	Screw-in cartridge valve
Controls	switching solenoid
Characteristic	pilot operated, poppet type
MTTFd value	150 years
Construction size	NG 5 / SAE 08
Thread size	3/4-16 UNF-2A
Mounting attitude	unrestricted
Weight	0.40 kg
Cavity acc. ISO	fits into ISO 17209: 3/4-01-0-13
Cavity acc. NFPA	fits into NFPA/T3.5.50: 0.750-01-0-09
Cavity acc. factory standard	For cavity BH/C0820
Tightening torque steel	50 Nm
Tightening torque aluminium	50 Nm
Tightening torque tolerance	± 10 %
Minimum ambient temperature	- 25 °C
Maximum ambient temperature	+ 50 °C
Surface protection	All external parts with zinc-nickel plating according to DIN EN ISO 19598
Sealing material	see ordering code
Seal kit order number	NBR: DS-502-N / FKM: DS-502-V

Hydraulic characteristics	Description, value, unit
Maximum operating pressure	350 bar
Maximum flow rate	40 l/min
Flow direction	see symbol
Hydraulic fluid	HL and HLP mineral oil according to DIN 51 524; other fluids on request!
Minimum fluid temperature	- 25 °C
Maximum fluid temperature	+ 80 °C
Viscosity range	10 ... 500 mm^2/s (cSt)
Recommended viscosity range	15 ... 250 mm^2/s (cSt)
Minimum fluid cleanliness (cleanlineless class according to ISO 4406:1999)	class 20/18/15

NOTE!
The switching safety of the valve is achieved by the volume flow and pressure drop (Δp).

Electric characteristics	Description, value, unit
Actuator type	solenoid coil
Solenoid coils type	D36
Supply voltage DC	12/24 V DC
Supply voltage AC	115/230 (50 ... 60 Hz) V AC
Supply voltage tolerance	± 10 %
Maximum permissible power consumption	17 W
Switching time	Switching time measured at: U_N; Δp = 300 bar; Q = 30 l/min; $T_{Ambient}$ = 20 °C; ϑ = 46 mm2/s) 140 ms (energizing) 20 ms (de-energizing)
Relative duty cycle	100 %
Electrical connection coil	several connection types available, see ordering code
Protection class solenoid coil to ISO 20 653 / EN 60 529	several classes of protection available, see ordering code (with appropriate mating connector and proper fitting and sealing)

NOTE!
The switching time can be strongly dependent on flow rate, pressure, oil viscosity and the dwell time under pressure. In practice, the switching time may therefore deviate from the specified value range.

Performance graphs

measured with oil viscosity 33.0 mm²/s (cSt), coil at steady-state temperature and 10 % undervoltage

p = f (Q) Performance limit

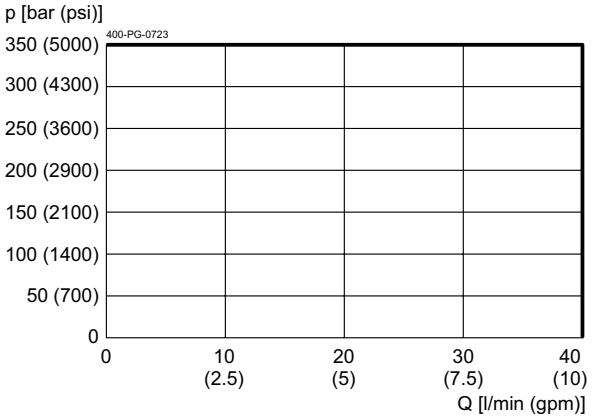

Δp = f (Q) Pressure drop-flow rate characteristic

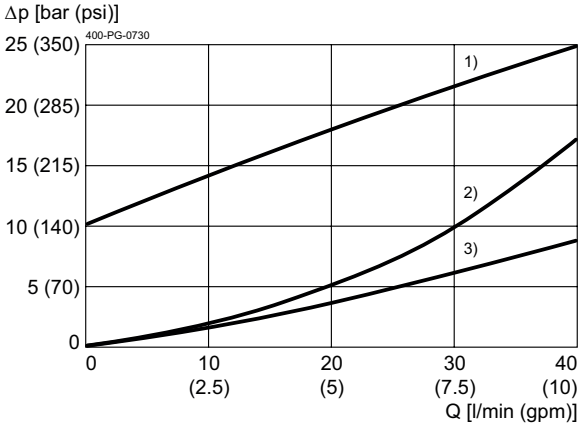

1) 1 → 2 solenoid energized
2) 1 → 2 solenoid de-energized
3) 2 → 1 solenoid de-energized

Dimensions and sectional view

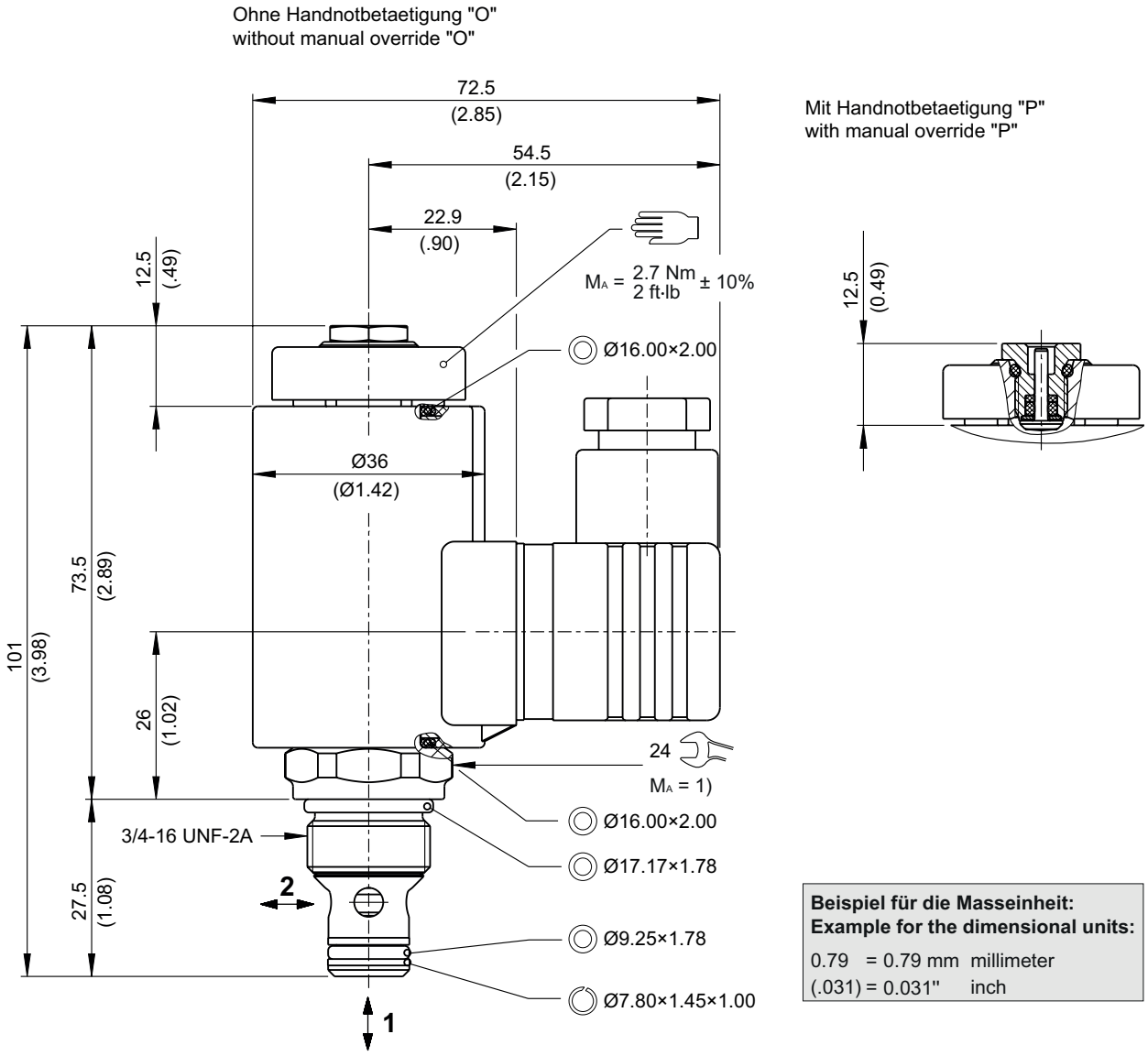

Installation information

NOTE!
1) When fitting the screw-in cartridge valve, use the specified tightening torque. The value can be found in the chapter "Technical data".

NOTE!
The seals are not available individually. The seal kit order number can be found in the chapter "Technical data".

ATTENTION!
Only qualified personnel with mechanical skills may carry out any maintenance work. Generally, the only work that should ever be undertaken is to check, and possibly replace, the seals. When changing seals, oil or grease the new seals thoroughly before fitting them.

Ordering code

Ex. W R V E 22O - 5 H - _ - N A 1 24 D _

W = directional valve
R = check valve function (seat-valve shut-off)
V = pilot operated
E = electrically operated, V DC = 17 W / V AC = 17 W
22O = 2-way/2-position, normally open
5 = nominal size 5 / SAE 08
H = cavity type BH/C0820
O = without manual override
P = with manual override
(blank) = NBR (nitril-butadien-rubber / BUNA) seals **(standard)**
V = FKM (fluorocarbon rubber / VITON) seals
(special seals - please contact BUCHER)
A ... Q = standard model according to valid data sheet
Z ... R = special model after consultation
1 ... 9 = technical design no. *(omit when ordering)*
... = voltage e. g. 24 (24 V)
D = current DC
A = current AC
(blank) = DIN EN 175301-803 connection, 3-pole 2 P+E with mating plug, IP 65 **(standard)**
M100 = DIN EN 175301-803 connection, 3-pole 2 P+E
C = Kostal plug connection (IP 65)
JT = Junior Timer radial plug connection (with protection diode, IP 65)
IT = Junior Timer axial plug connection (with protection diode, IP 65)
D = Deutsch plug connection 45º DT04-2P (IP 67/69K)
DT = Deutsch plug connection 45º DT04-2P (with protection diode, IP 67/69K)
S = AMP Superseal 1.5 (IP 67) / Metri-Pack 150 (IP 65) plug connection
F = flying leads (500 mm)
} mating plug not supplied

Related data sheets

Reference	Description
400-P-040011	Form tools
400-P-120110	Solenoid coil D36
400-P-040401	Cavity BH/C0820
400-P-738571	Threaded port body GBH-38...
400-P-010101	MTTFD Values for Hydraulic Valves

info.ch@bucherhydraulics.com **www.bucherhydraulics.com**

© 2023 by Bucher Hydraulics AG Frutigen, 3714 Frutigen, Switzerland

All rights reserved.
Data is provided for the purpose of product description only, and must not be construed as warranted characteristics in the legal sense. The information does not relieve users from the duty of conducting their own evaluations and tests. Because the products are subject to continual improvement, we reserve the right to amend the product specifications contained in this catalogue.

BUCHER hydraulics
WWW.SUMY.IR

General information
Cavity

Type series: HF/C1220A

Dimensions and sectional view

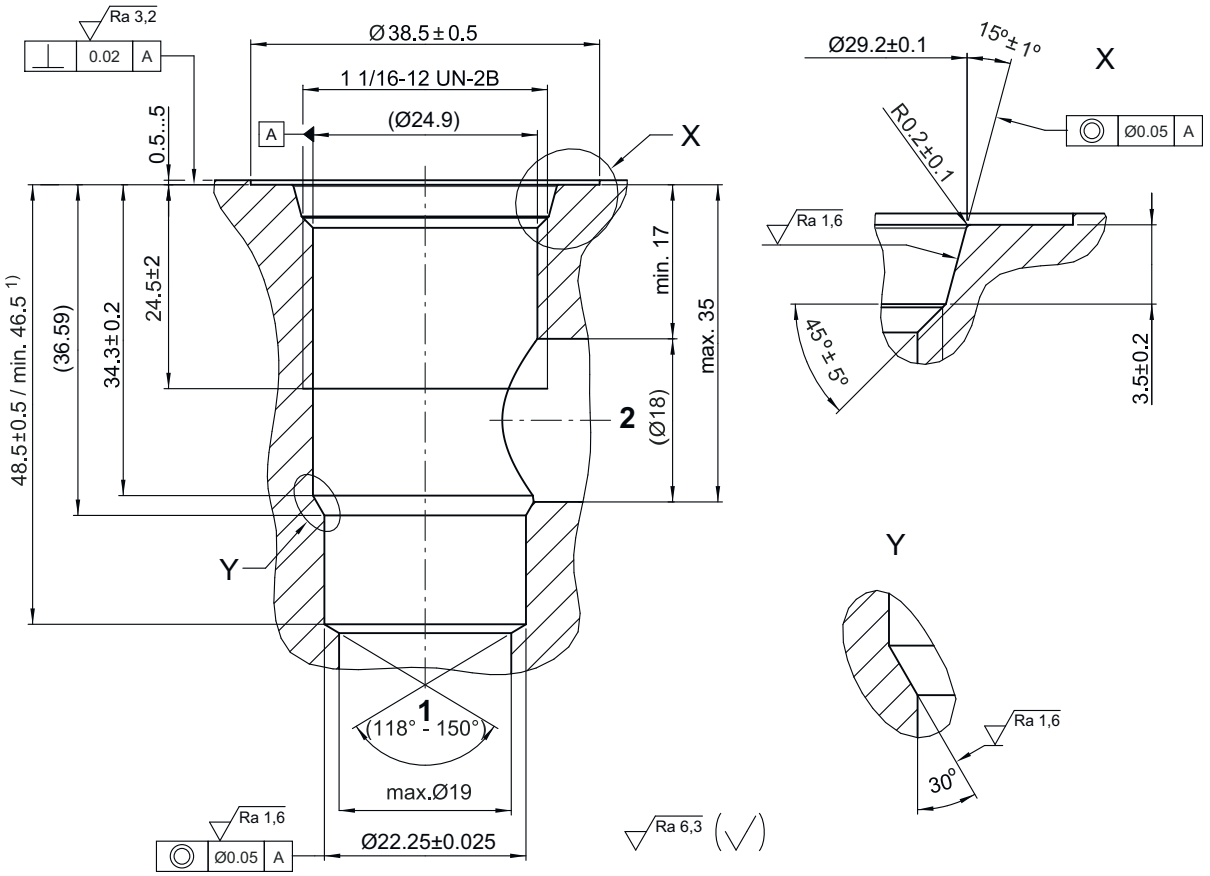

HINWEIS!
NOTE!

1) Passungstiefe
Minimum depth of specified diametral tolerance

Beispiel für die Masseinheit:
Example for the dimensional units:

0.79 = 0.79 mm millimeter

Installation information

ATTENTION!
You must maintain the specified positional and diametral tolerances. To ensure trouble-free operation of the screw-in cartridges, we strongly recommend that pilot drilling, boring, reaming and cavity thread-cutting are always performed in one setup.

NOTE!
Cavity type to factory standard.

NOTE!
We offer form tool sets for sale or hire. See data sheet 400-P-040011 for further information.

info.ch@bucherhydraulics.com **www.bucherhydraulics.com**

© 2025 by Bucher Hydraulics AG Frutigen, 3714 Frutigen, Switzerland

All rights reserved.
Data is provided for the purpose of product description only, and must not be construed as warranted characteristics in the legal sense. The information does not relieve users from the duty of conducting their own evaluations and tests. Because the products are subject to continual improvement, we reserve the right to amend the product specifications contained in this catalogue.

WWW.SUMY.IR

Directional valve 2-way/2-position

Q_{max} = 140 l/min, p_{max} = 350 bar
pilot operated, poppet type, switching solenoid
Type series: WRV_22G-10F-_A...

- Screw-in cartridge valve
- For cavity HF/C1220A
- All external parts with zinc-nickel plating according to DIN EN ISO 19598
- Installation in threaded port body type GHF-34
- Reliable switching, even after long dwell times
- Low head loss
- High flow rates
- The slip-on coil can be rotated, and it can be replaced without opening the hydraulic envelope
- High pressure wet-armature solenoids
- Various plug-connector systems and voltages are available

Description

The 2-way/2-position solenoid operated directional seat valves, series WRV_22G-10F..., are size 10 / SAE 12, two stage, pressure balanced screw-in valves with a 1 1/16-12 UN mounting thread. They are designed on the poppet/seat principle, and the 2 to 1 flow path is therefore virtually leak-free. "De-energized closed" function is available. The switching times can be influenced by using solenoid coils with differing power ratings. The straightforward design delivers a good price/performance ratio and outstanding head-loss/flow ratings. These valves are used in mobile and industrial applications where leak-tight shut-off functions are crucially important. Examples are where loads, tensions, or clamping forces must be held without leakage. All external parts of the cartridge are zinc-nickel plated and are thus suitable for use in the harshest operating environments. The slip-on coils can be replaced without opening the hydraulic envelope and can be positioned at any angle through 360°. For self-assembly, please refer to the section related data sheets.

Symbol

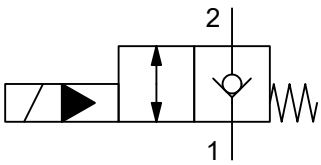

Technical data

General characteristics	Description, value, unit
Function group	Directional valve
Function	2-way/2-position
Design	Screw-in cartridge valve
Controls	switching solenoid
Characteristic	pilot operated, poppet type
MTTFd value	150 years
Construction size	NG 10 / SAE 12
Thread size	1 1/16-12 UN-2A
Mounting attitude	unrestricted
Weight	0.70 kg
Cavity acc. factory standard	For cavity HF/C1220A
Tightening torque steel	150 Nm
Tightening torque aluminium	150 Nm
Tightening torque tolerance	± 10 %
Minimum ambient temperature	- 25 °C
Maximum ambient temperature	+ 50 °C
Surface protection	All external parts with zinc-nickel plating according to DIN EN ISO 19598
Sealing material	see ordering code
Seal kit order number	NBR: DS-498-N / FKM: DS-498-V

Hydraulic characteristics	Description, value, unit
Maximum operating pressure	350 bar
Maximum flow rate	140 l/min
Flow direction	see symbol
Hydraulic fluid	HL and HLP mineral oil according to DIN 51 524; other fluids on request!
Minimum fluid temperature	- 25 °C
Maximum fluid temperature	+ 80 °C
Viscosity range	10 ... 500 mm^2/s (cSt)
Recommended viscosity range	15 ... 250 mm^2/s (cSt)
Minimum fluid cleanliness (cleanlineless class according to ISO 4406:1999)	class 20/18/15

NOTE!
The switching safety of the valve is achieved by the volume flow and pressure drop (Δp).

Electric characteristics	Description, value, unit
Actuator type	solenoid coil
Solenoid coils type	D36
Supply voltage DC	12/24 V DC
Supply voltage AC	115/230 (50 ... 60 Hz) V AC
Supply voltage tolerance	± 10 %

WWW.SUMY.IR

Electric characteristics	Description, value, unit
Nominal power consumption	Version "E": V DC = 17 W / V AC = 17 W Version "N": V DC = 27 W / V AC = 25 W
Switching time	Switching time measured at: UN; Δp = 350 bar; Q = 80 l/min; TAmbient = 20 °C; ϑ = 46 mm2/s), WRVE: 45 ms (energizing) 115 ms (de-energizing), WRVN: 45 ms (energizing) 71 ms (de-energizing)
Relative duty cycle	100 %
Electrical connection coil	several connection types available, see ordering code
Protection class solenoid coil to ISO 20 653 / EN 60 529	several classes of protection available, see ordering code (with appropriate mating connector and proper fitting and sealing)

NOTE!
The switching time can be strongly dependent on flow rate, pressure, oil viscosity and the dwell time under pressure. In practice, the switching time may therefore deviate from the specified value range.

Performance graphs

measured with oil viscosity 33.0 mm²/s (cSt), coil at steady-state temperature and 10 % undervoltage

p = f (Q) Performance limit

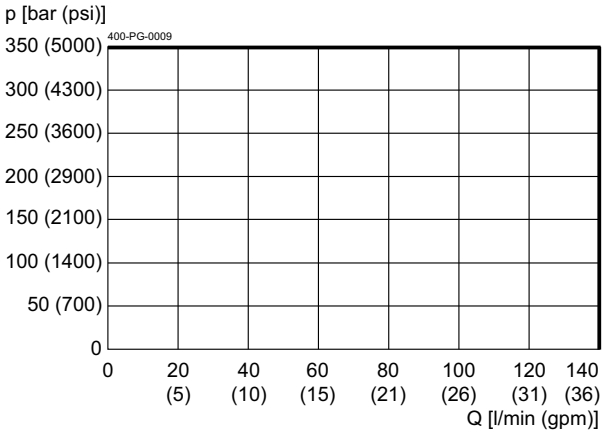

Δp = f (Q) Pressure drop-flow rate characteristic

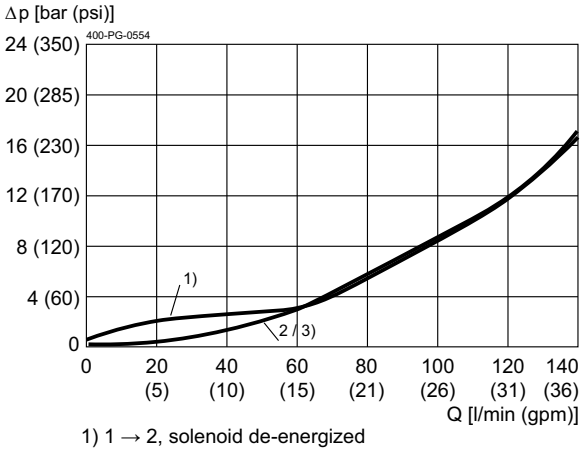

1) 1 → 2, solenoid de-energized
2) 2 → 1, solenoid energized
3) 1 → 2, solenoid energized

Dimensions and sectional view

Beispiel für die Masseinheit:
Example for the dimensional units:

0.79 = 0.79 mm millimeter
(.031) = 0.031" inch

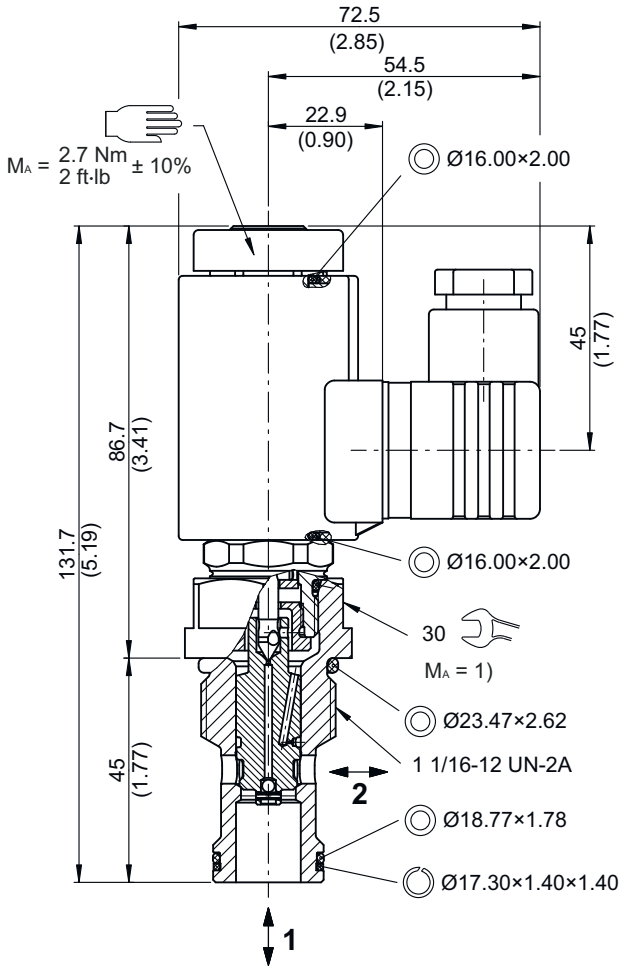

Installation information

IMPORTANT!
When fitting the screw-in valves, use the specified tightening torque. No adjustments are necessary, since the valves are set in the factory.

ATTENTION!
Only qualified personnel with mechanical skills may carry out any maintenance work. Generally, the only work that should ever be undertaken is to check, and possibly replace, the seals. When changing seals, oil or grease the new seals thoroughly before fitting them.

Ordering code

Ex. W R V _ 22G - 10 F - N A 1 24 _ _

W	=	directional valve
R	=	check valve function, seated design
V	=	pilot operated
E	=	electrically operated, V DC = 17 W / V AC = 17 W
N	=	electrically operated, V DC = 27 W / V AC = 25 W
22G	=	2-way/2-position, normally closed
10	=	nominal size 10 / SAE 12
F	=	cavity type HF/C1220A
N	=	NBR (Nitrile) seals **(standard)**
V	=	FKM (Viton) seals (special seals - please contact BUCHER)
A ... Q	=	standard model - see relevant data sheet
Z ... R	=	special model - please consult BUCHER
1 ... 9	=	technical design no. (omit when ordering)
...	=	voltage e. g. 24 (24 V)
D	=	current DC
A	=	current AC
Ohne	=	DIN EN 175301-803 connection with mating plug **(standard, IP 65)**
M100	=	DIN EN 175301-803 connection without mating plug
C	=	Kostal plug connection (IP 65)
JT	=	Junior Timer radial plug connection (with protection diode, IP 65)
IT	=	Junior Timer axial plug connection (with protection diode, IP 65)
D	=	Deutsch plug connection 45º DT04-2P (IP 67/69K)
DT	=	Deutsch plug connection 45º DT04-2P (with protection diode, IP 67/69K)
S	=	AMP Superseal 1.5 (IP 67) / Metri-Pack 150 (IP 65) plug connection
F	=	flying leads (500 mm)

mating plug not supplied

Related data sheets

Reference	Description
400-P-040011	Form tools
400-P-120110	Solenoid coil D36
400-P-065111	Cavity HF/C1220A
400-P-740551	Threaded port body GHF-34...
400-P-010101	MTTFd Values for Hydraulic Valves

info.ch@bucherhydraulics.com **www.bucherhydraulics.com**

© 2025 by Bucher Hydraulics AG Frutigen, 3714 Frutigen, Switzerland

All rights reserved.
Data is provided for the purpose of product description only, and must not be construed as warranted characteristics in the legal sense. The information does not relieve users from the duty of conducting their own evaluations and tests. Because the products are subject to continual improvement, we reserve the right to amend the product specifications contained in this catalogue.

BUCHER hydraulics

WWW.SUMY.IR

General information
Cavity

Type series: DH

Dimensions and sectional view

Beispiel für die Masseinheit:
Example for the dimensional units:
0.79 = 0.79 mm millimeter

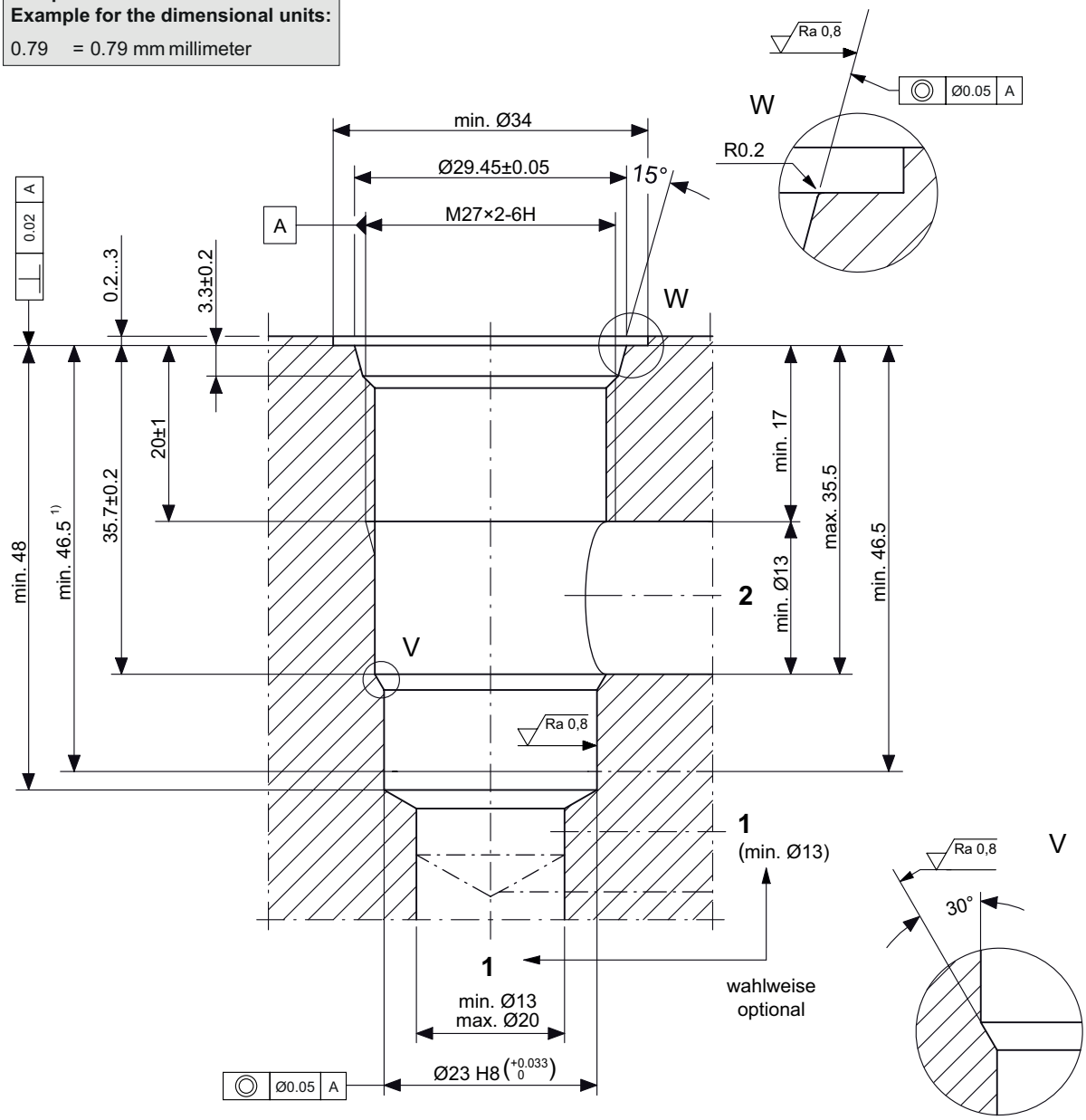

HINWEIS!
NOTE!

1) Passungstiefe
Minimum depth of specified diametral tolerance

Ra 3,2 (√)

Installation information

ATTENTION!
You must maintain the specified positional and diametral tolerances. To ensure trouble-free operation of the screw-in cartridges, we strongly recommend that pilot drilling, boring, reaming and cavity thread-cutting are always performed in one setup.

NOTE!
The cavity type DH complies with the standard according to ISO 7789: 27-01-0-07.

NOTE!
We offer form tool sets for sale or hire. For further information, see data sheet 400-P-040011.

info.ch@bucherhydraulics.com **www.bucherhydraulics.com**

© 2023 by Bucher Hydraulics AG Frutigen, 3714 Frutigen, Switzerland

All rights reserved.
Data is provided for the purpose of product description only, and must not be construed as warranted characteristics in the legal sense. The information does not relieve users from the duty of conducting their own evaluations and tests. Because the products are subject to continual improvement, we reserve the right to amend the product specifications contained in this catalogue.

BUCHER hydraulics

WWW.SUMY.IR

Directional valve 2-way/2-position

Q_{max} = 140 l/min, p_{max} = 350 bar
pilot operated, poppet type, switching solenoid
Type series: WR22G_HA-10-...

- Screw-in cartridge valve
- For cavity DH
- All external parts with zinc-nickel plating according to DIN EN ISO 19598
- Seat tight shut-off
- The slip-on coil can be rotated, and it can be replaced without opening the hydraulic envelope
- High pressure wet-armature solenoids
- Various plug-connector systems and voltages are available
- Compact construction
- High flow rates
- Low head loss
- Reliable switching, even after long dwell times
- Installation in threaded port body type GCDHA

Description

The 2-way/2-position solenoid-operated directional seat valves, series WR22G..., are size 10, two stage, pressure balanced screw-in valves with a M27x2 mounting thread. The main and pilot stages are both designed on the poppet/seat principle, and the 2 to 1 flow path is therefore virtually leak-free. The straightforward design delivers a good price/performance ratio and outstanding head loss/ flow ratings. All external parts of the screw-in valves are zinc-nickel plated and are thus suitable for use in the harshest operating environments. The slip-on coils can be replaced without opening the hydraulic envelope and can be positioned at any angle through 360°. These valves are primarily used as pilot valves in certain mobile and industrial applications where leak-tight shut-off functions are crucially important. Examples are where loads, tensions, or clamping forces must be held without leakage. For self-assembly, please refer to the section related data sheets.

Symbol

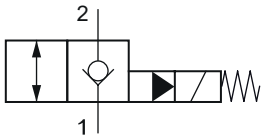

Technical data

General characteristics	Description, value, unit
Sales category	minimum order quantity required (see order details)
Function group	Directional valve
Function	2-way/2-position
Design	Screw-in cartridge valve
Controls	switching solenoid
Characteristic	pilot operated, poppet type
Construction size	NG 10
Thread size	M27×2
Mounting attitude	unrestricted
Weight	0.57 kg
Cavity acc. ISO	fits into ISO 7789: 27-01-0-07
Cavity acc. factory standard	For cavity DH
Tightening torque steel	80 Nm
Tightening torque tolerance	± 10 %
Minimum ambient temperature	- 30 °C
Maximum ambient temperature	+ 50 °C
Surface protection	All external parts with zinc-nickel plating according to DIN EN ISO 19598
Sealing material	see ordering code
Seal kit order number	NBR: DS-367-N / FKM: DS-367-V

Hydraulic characteristics	Description, value, unit
Maximum operating pressure	350 bar
Maximum flow rate	140 l/min
Flow direction	see symbol
Hydraulic fluid	HL and HLP mineral oil according to DIN 51 524; other fluids on request!
Minimum fluid temperature	- 30 °C
Maximum fluid temperature	+ 80 °C
Viscosity range	10 ... 500 mm^2/s (cSt)
Recommended viscosity range	15 ... 250 mm^2/s (cSt)
Minimum fluid cleanliness (cleanlineless class according to ISO 4406:1999)	class 20/18/15

NOTE!
The switching safety of the valve is achieved by the volume flow and pressure drop (Δp).

Electric characteristics	Description, value, unit
Actuator type	solenoid coil
Solenoid coils type	D36
Supply voltage DC	12/24 V DC
Supply voltage AC	115/230 (50 ... 60 Hz) V AC
Supply voltage tolerance	± 10 %
Nominal power consumption	Version "E": V DC = 17 W / V AC = 17 W Version "N": V DC = 27 W / V AC = 25 W
Switching time	Version "E": 30...90 ms (energized) / 75...220 ms (de-energized) Version "N": 25...130 ms (energized) / 50...200 ms (de-energized)
Relative duty cycle	100 %
Electrical connection coil	several connection types available, see ordering code
Protection class solenoid coil to ISO 20 653 / EN 60 529	several classes of protection available, see ordering code (with appropriate mating connector and proper fitting and sealing)

NOTE!
The switching time can be strongly dependent on flow rate, pressure, oil viscosity and the dwell time under pressure. In practice, the switching time may therefore deviate from the specified value range.

Performance graphs

measured with oil viscosity 33.0 mm²/s (cSt), coil at steady-state temperature and 10 % undervoltage

p = f (Q) Performance limit

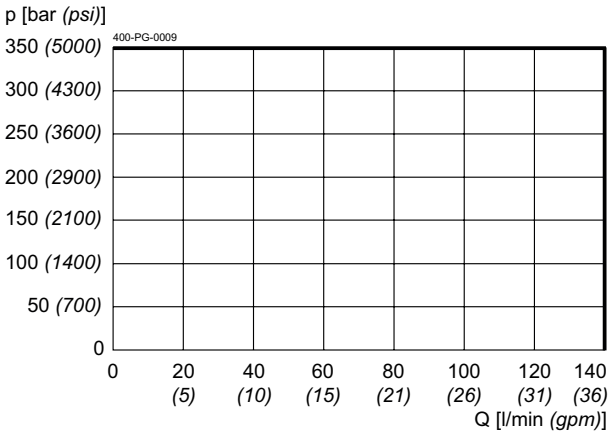

Δp = f (Q) Pressure drop-flow rate characteristic

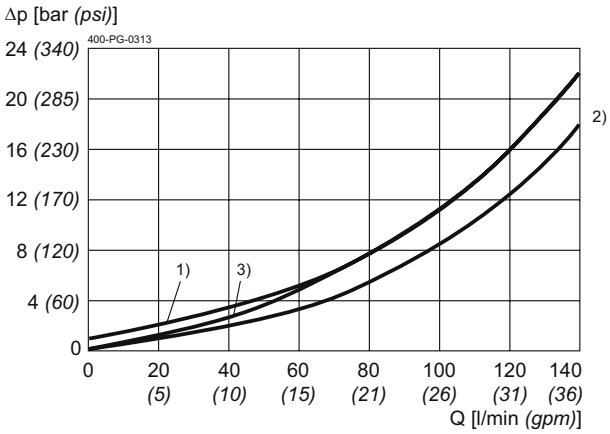

1) 1 →2, solenoid de-energized
2) 2 → 1, solenoid energized
3) 1 →2, solenoid energized

Dimensions and sectional view

Beispiel für die Masseinheit:
Example for the dimensional units:

0.79 = 0.79 mm millimeter
(.031) = 0.031" inch

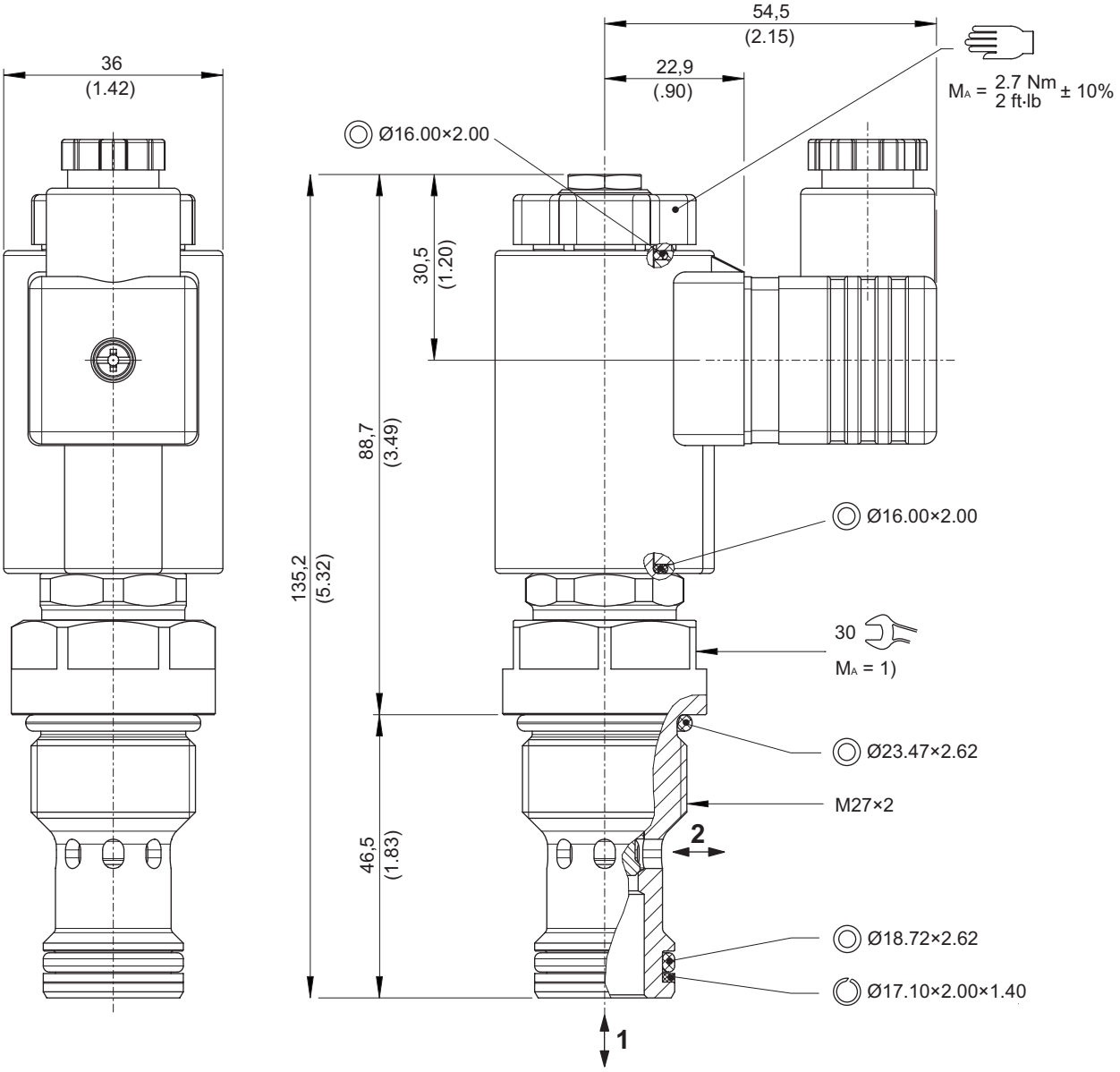

Installation information

NOTE!
1) When fitting the screw-in cartridge valve, use the specified tightening torque. The value can be found in the chapter "Technical data".

NOTE!
The seals are not available individually. The seal kit order number can be found in the chapter "Technical data".

ATTENTION!
Only qualified personnel with mechanical skills may carry out any maintenance work. Generally, the only work that should ever be undertaken is to check, and possibly replace, the seals. When changing seals, oil or grease the new seals thoroughly before fitting them.

Ordering code

Ex. W R 22G E H A - 10 _ - 1 24 D _

W	=	directional valve
R	=	check valve function, pilot operated
22G	=	2-way/2-position, normally closed
E	=	electrically operated, V DC = 17 W / V AC = 17 W **(standard)**
N	=	electrically operated, V DC = 27 W / V AC = 25 W
H	=	cavity type DH
A ... Q	=	standard model - see relevant data sheets
Z ... R	=	special features - please consult BUCHER
10	=	nominal size 10
(ohne)	=	NBR (nitril-butadien-rubber / BUNA) seals **(standard)**
V	=	FKM (fluorocarbon rubber / VITON) seals *(Spezial-Dichtungen nach Rücksprache)*
1 ... 9	=	technical design no. (omit when ordering)
...	=	voltage e.g. 24 (24 V)
D	=	current DC
A	=	current AC
(blank)	=	DIN EN 175301-803 connection, 3-pole 2 P+E with mating plug (IP 65) **(standard)**
M100	=	DIN EN 175301-803 connection, 3-pole 2 P+E
C	=	Kostal plug connection (IP 65)
JT	=	Junior Timer radial plug connection (with protection diode, IP 65)
IT	=	Junior Timer axial plug connection (with protection diode, IP 65)
D	=	Deutsch plug connection 45° DT04-2P (IP 67/69K)
DT	=	Deutsch plug connection 45° DT04-2P (with protection diode, IP 67/69K)
S	=	AMP Superseal 1.5 (IP 67) / Metri-Pack 150 (IP 65) plug connection
F	=	flying leads (500 mm)

mating plug not supplied

IMPORTANT!
Minimum order quantity of 500 pcs/year

Related data sheets

Reference	Description
400-P-040011	Form tools
400-P-060171	Cavity DH
400-P-740161	Threaded port body GCDHA
400-P-120110	Solenoid coil D36

info.ch@bucherhydraulics.com **www.bucherhydraulics.com**

© 2024 by Bucher Hydraulics AG Frutigen, 3714 Frutigen, Switzerland

All rights reserved.
Data is provided for the purpose of product description only, and must not be construed as warranted characteristics in the legal sense. The information does not relieve users from the duty of conducting their own evaluations and tests. Because the products are subject to continual improvement, we reserve the right to amend the product specifications contained in this catalogue.

BUCHER hydraulics
WWW.SUMY.IR

General information
Cavity

Type series: LA/C1620

Dimensions and sectional view

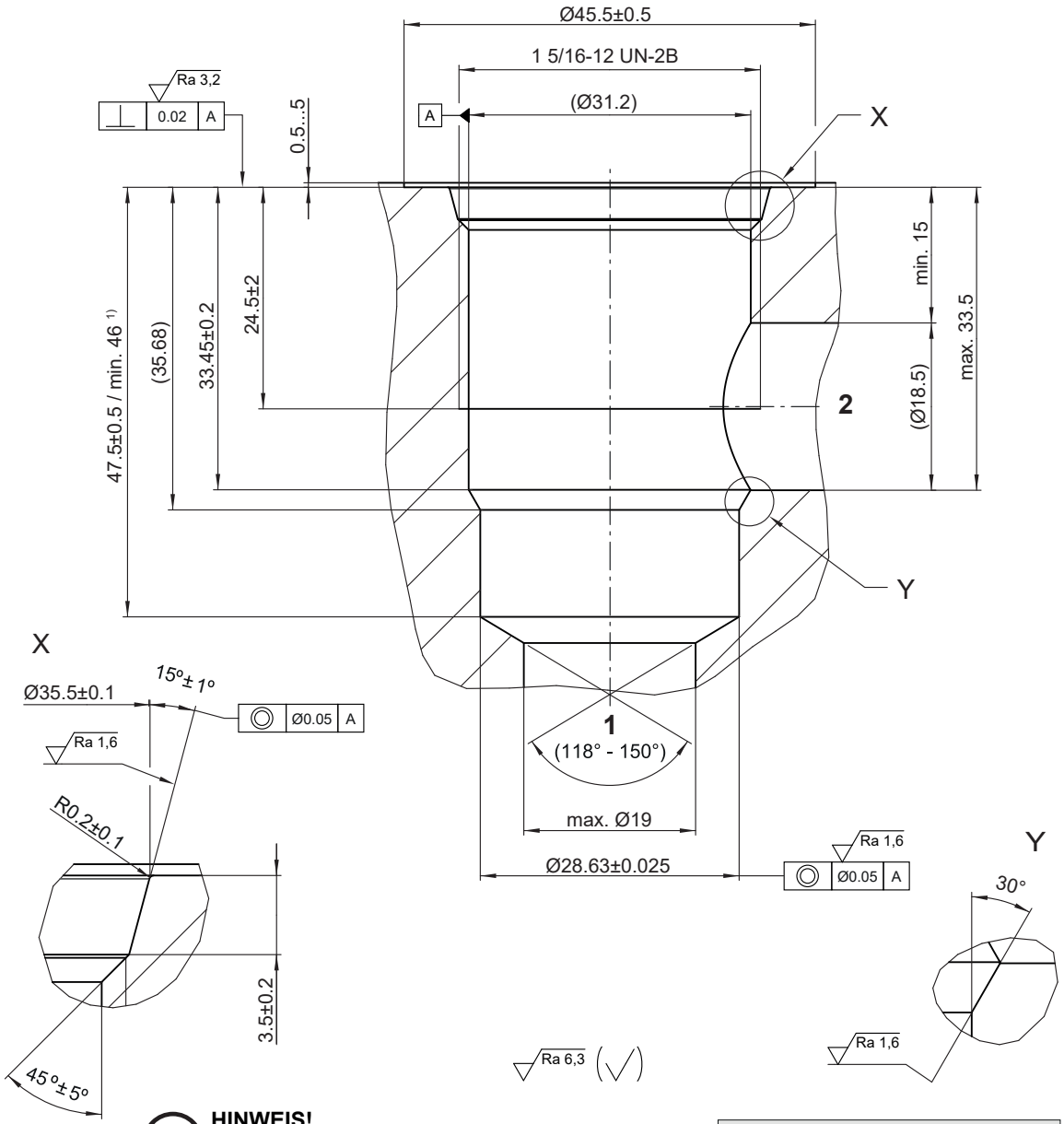

HINWEIS!
NOTE!

1) Passungstiefe
Minimum depth of specified diametral tolerance

Beispiel für die Masseinheit:
Example for the dimensional units:
0.79 = 0.79 mm millimeter

WWW.SUMY.IR

Installation information

ATTENTION!
You must maintain the specified positional and diametral tolerances. To ensure trouble-free operation of the screw-in cartridges, we strongly recommend that pilot drilling, boring, reaming and cavity thread-cutting are always performed in one setup.

NOTE!
Cavity type to factory standard.

NOTE!
We offer form tool sets for sale or hire. See data sheet 400-P-040011 for further information.

info.ch@bucherhydraulics.com **www.bucherhydraulics.com**

© 2025 by Bucher Hydraulics AG Frutigen, 3714 Frutigen, Switzerland

All rights reserved.
Data is provided for the purpose of product description only, and must not be construed as warranted characteristics in the legal sense. The information does not relieve users from the duty of conducting their own evaluations and tests. Because the products are subject to continual improvement, we reserve the right to amend the product specifications contained in this catalogue.

BUCHER hydraulics

WWW.SUMY.IR

Directional valve 2-way/2-position

Q_{max} = 180 l/min, p_{max} = 350 bar
switching solenoid, pilot operated, poppet type
Type series: WRVP22G-12A-_B...

- Screw-in cartridge valve
- For cavity LA/C1620
- All external parts with zinc-nickel plating according to DIN EN ISO 19598
- Fits common cavity according to ISO and NFPA
- Reliable switching, even after long dwell times
- Low head loss
- High flow rates
- Installation in threaded port body type GLA-11
- The slip-on coil can be rotated, and it can be replaced without opening the hydraulic envelope
- High pressure wet-armature solenoids
- Various plug-connector systems and voltages are available

Description

The 2-way/2-position solenoid operated directional seat valves, series WRVP22G..., are size NG 12 / SAE 16, two stage, pressure balanced screw-in valves with a 1 5/16-12 UN mounting thread. They are designed on the poppet/seat principle, and the 2 to 1 flow path is therefore virtually leak-free. “De-energized closed” function is available. The straightforward design delivers a good price/performance ratio and outstanding headloss/flow ratings. These valves are used in mobile and industrial applications where leak-tight shutoff functions are crucially important. Examples are where loads, tensions, or clamping forces must be held without leakage. All external parts of the screw-in valve are zinc-nickel plated and are thus suitable for use in the harshest operating environments. The slip-on coils can be replaced without opening the hydraulic envelope and can be positioned at any angle through 360°. For self-assembly, please refer to the section related data sheets.

Symbol

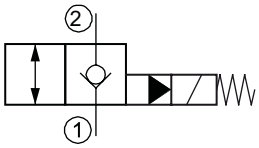

Technical data

General characteristics	Description, value, unit
Function group	Directional valve
Function	2-way/2-position
Design	Screw-in cartridge valve
Controls	switching solenoid
Characteristic	pilot operated, poppet type
MTTFd value	150 years
Construction size	NG 12 / SAE 16
Thread size	1 5/16-12 UN-2A
Mounting attitude	unrestricted
Weight	1.70 kg
Cavity acc. ISO	fits into ISO 17209: 1 5/16-01-0-13
Cavity acc. NFPA	fits into NFPA/T3.5.50: 1.312-01-0-09
Cavity acc. factory standard	For cavity LA/C1620
Tightening torque steel	245 Nm
Tightening torque aluminium	245 Nm
Tightening torque tolerance	± 10 %
Minimum ambient temperature	- 25 °C
Maximum ambient temperature	+ 50 °C
Surface protection	All external parts with zinc-nickel plating according to DIN EN ISO 19598
Sealing material	see ordering code
Seal kit order number	NBR: DS-499-N / FKM: DS-499-V

Hydraulic characteristics	Description, value, unit
Maximum operating pressure	350 bar
Maximum flow rate	180 l/min
Flow direction	see symbol
Hydraulic fluid	HL and HLP mineral oil according to DIN 51 524; other fluids on request!
Minimum fluid temperature	- 25 °C
Maximum fluid temperature	+ 80 °C
Viscosity range	10 ... 500 mm^2/s (cSt)
Recommended viscosity range	15 ... 250 mm^2/s (cSt)
Minimum fluid cleanliness (cleanlineless class according to ISO 4406:1999)	class 20/18/15

Electric characteristics	Description, value, unit
Actuator type	solenoid coil
Solenoid coils type	36X48/16.1
Supply voltage DC	12/24 V DC
Supply voltage tolerance	± 10 %
Maximum permissible power consumption	19 W
Switching time	Switching time measured at: U_N; Δp = 300 bar; Q = 120 l/min; $T_{Ambient}$ = 20 °C; ϑ = 46 mm2/s) 36 ms (energizing) 100 ms (de-energizing)
Relative duty cycle	100 %
Electrical connection coil	several connection types available, see ordering code
Protection class solenoid coil to ISO 20 653 / EN 60 529	several classes of protection available, see ordering code (with appropriate mating connector and proper fitting and sealing)

Performance graphs

measured with oil viscosity 33.0 mm²/s (cSt), coil at steady-state temperature and 10 % undervoltage

Δp = f (Q) Pressure drop-flow rate characteristic

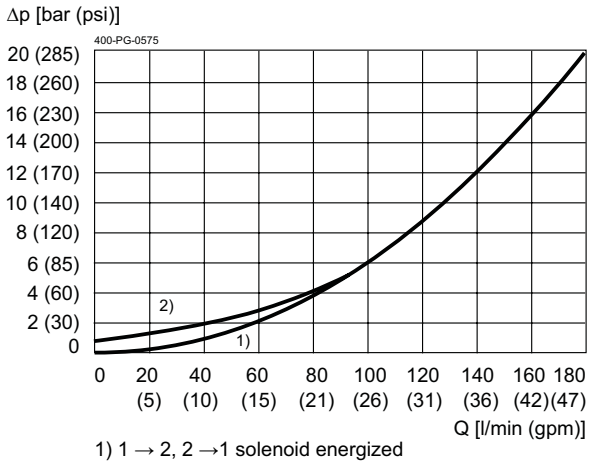

1) 1 → 2, 2 →1 solenoid energized
2) 1 → 2 solenoid de-energized

p = f (Q) Performance limit

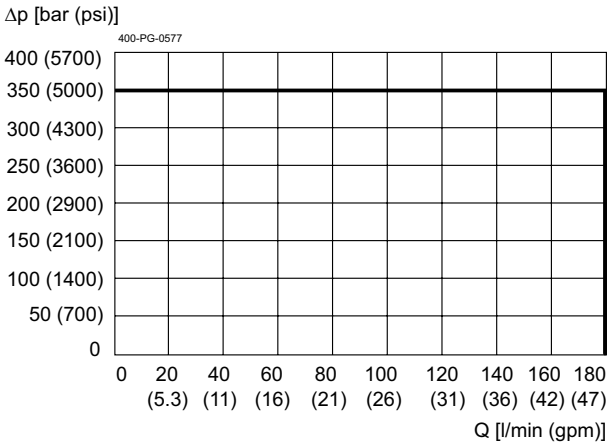

Dimensions and sectional view

Beispiel für die Masseinheit:
Example for the dimensional units:

.031 = 0.031" inch
(0.79) = 0.79 mm millimeter

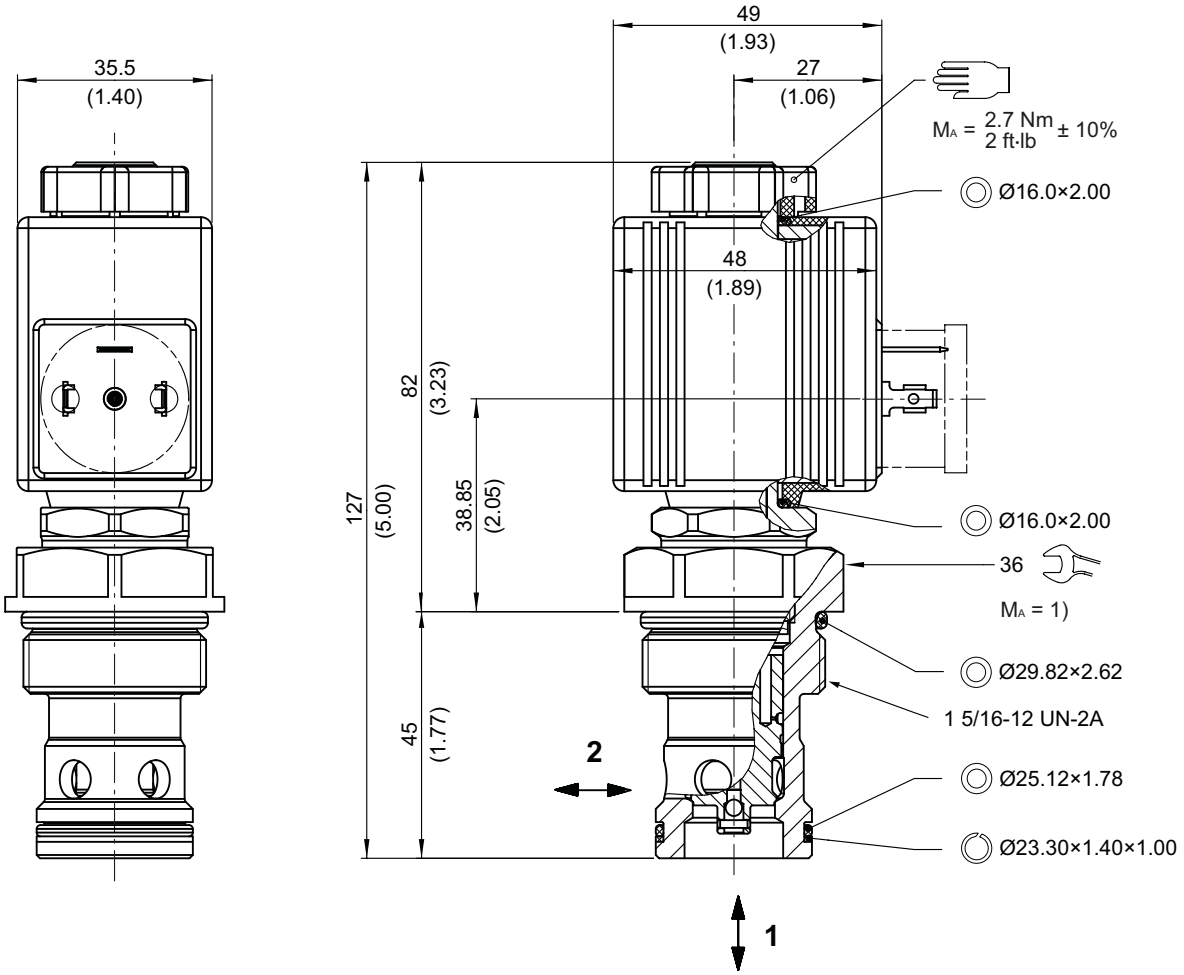

Installation information

NOTE!
1) When fitting the screw-in cartridge valve, use the specified tightening torque. The value can be found in the chapter "Technical data".

ATTENTION!
Only qualified personnel with mechanical skills may carry out any maintenance work. Generally, the only work that should ever be undertaken is to check, and possibly replace, the seals. When changing seals, oil or grease the new seals thoroughly before fitting them.

Ordering code

Ex. W R V P 22G - 12 A - F - N B 1 24 D G _

W	=	directional valve
R	=	check valve function (seat-type)
V	=	pilot operated
P	=	electrically operated, V DC = 19 W
22G	=	2-way/2-position, normally closed
12	=	nominal size 12 / SAE 16
A	=	cavity type LA/C1620
F	=	main spool overlap (fine control)
N	=	NBR (nitril-butadien-rubber / BUNA) seals **(standard)**
V	=	FKM (fluorocarbon rubber / VITON) seals *(special seals - please consult BUCHER)*
A … Q	=	standard model according to valid data sheet
Z … R	=	special model after consultation
1 … 9	=	technical design no. (omit when ordering)
…	=	voltage e.g. 24 (24 V)
D	=	current DC
G	=	standard plug connection to DIN EN (3-pole, 2 P+E, IP 65)
J	=	Junior Timer radial plug connection (IP 65)
JR	=	Junior Timer radial plug connection (with protection diode, IP 65)
U	=	Deutsch plug connection radial DT04-2P (IP 67/69K)
UR	=	Deutsch plug connection radial DT04-2P (with protection diode, IP 67/69K)
(blank)	=	without mating plug
Q	=	with mating plug (only by connection type "G" possible)

Related data sheets

Reference	Description
400-P-040011	Form tools
400-P-120212	Solenoid coil 36X48/16.1
400-P-067101	Cavity LA/C1620
400-P-742101	Threaded port body GLA-11...
400-P-010101	MTTFD Values for Hydraulic Valves

info.ch@bucherhydraulics.com **www.bucherhydraulics.com**

© 2023 by Bucher Hydraulics AG Frutigen, 3714 Frutigen, Switzerland

All rights reserved.
Data is provided for the purpose of product description only, and must not be construed as warranted characteristics in the legal sense. The information does not relieve users from the duty of conducting their own evaluations and tests. Because the products are subject to continual improvement, we reserve the right to amend the product specifications contained in this catalogue.

BUCHER hydraulics
WWW.SUMY.IR

General information
Cavity

Type series: EB

Dimensions and sectional view

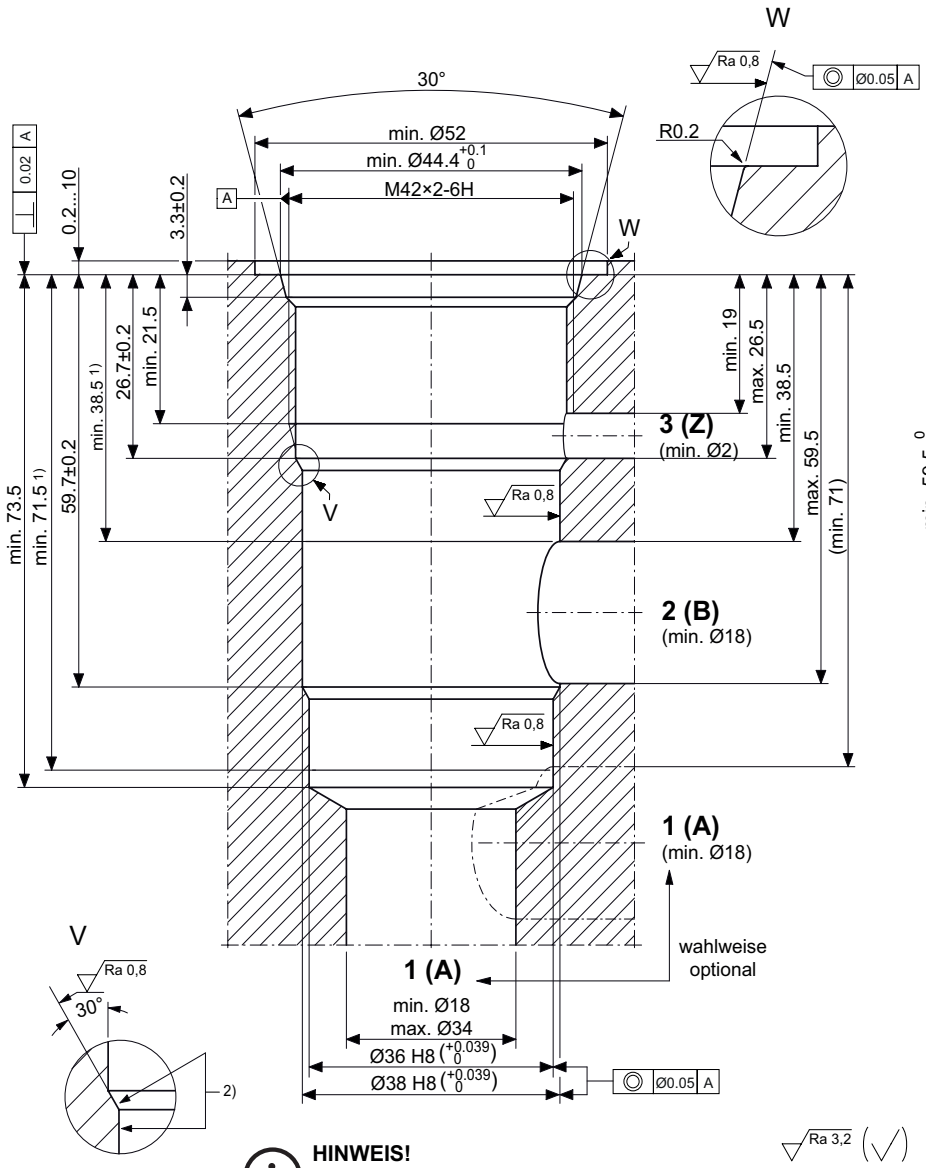

Bohrungsform mit Ring-Nut /
Cavity type with annular groove

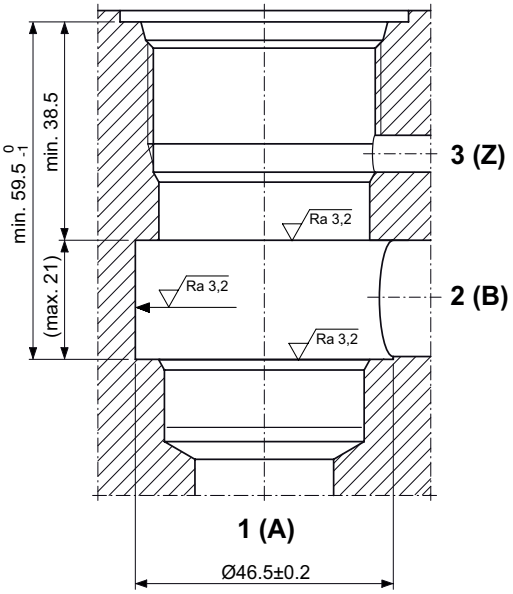

Ra 3,2 (√)

HINWEIS!
NOTE!

1) Passungstiefe
Minimum depth of specified diametral tolerance

2) Der Gewindeauslauf darf die Ringfläche und Ø38 H8 nicht verletzen.
The thread runout must not damage the ring surface or the Ø38 H8.

Beispiel für die Masseinheit:
Example for the dimensional units:
0.79 = 0.79 mm millimeter

Installation information

ATTENTION!
You must maintain the specified positional and diametral tolerances. To ensure trouble-free operation of the screw-in cartridges, we strongly recommend that pilot drilling, boring, reaming and cavity thread-cutting are always performed in one setup.

ATTENTION!
For improved Δp values with directional and logic valves, use the cavity with an annular groove in the 2 stage.

NOTE!
The cavity type EB complies with the standard according to ISO 7789: 42-06-0-07.

NOTE!
We offer form tool sets for sale or hire. For further information, see data sheet 400-P-040011.

info.ch@bucherhydraulics.com **www.bucherhydraulics.com**

© 2023 by Bucher Hydraulics AG Frutigen, 3714 Frutigen, Switzerland

All rights reserved.
Data is provided for the purpose of product description only, and must not be construed as warranted characteristics in the legal sense. The information does not relieve users from the duty of conducting their own evaluations and tests. Because the products are subject to continual improvement, we reserve the right to amend the product specifications contained in this catalogue.

BUCHER hydraulics
WWW.SUMY.IR

Directional valve 2-way/2-position

Q_{max} = 350 l/min, p_{max} = 420 bar
Pilot operated, poppet type, switching solenoid
Type series: WR22G_BA-16...

- Screw-in cartridge valve for cavity EB
- All external parts with zinc-nickel plating according to DIN EN ISO 19598
- Installation in threaded port body type GEBAA
- Seat tight shut-off
- No external pilot drain required
- High flow rates
- Also available as stack valve
- The slip-on coil can be rotated, and it can be replaced without opening the hydraulic envelope
- High pressure wet-armature solenoids
- Various plug-connector systems and voltages are available
- "Low watt" version

Symbol

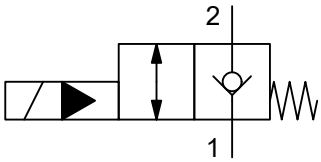

Description

The 2-way/2-position solenoid operated seat valves, series WR22_B... are size 16, two stage, high-performance screw-in valves with an M42×2 mounting thread. The main stage as well as the pilot stage are designed on the proven poppet seat design, which ensures that the cartridges are leak-tight from 2 to 1. The straightforward design delivers an outstanding price/performance ratio and good pressure loss/volume flow ratings. All external parts of the screw-in valves are zinc-nickel plated and are thus suitable for use in the harshest operating environments. The slip-on coils can be replaced without opening the hydraulic envelope and can be positioned at any angle through 360°. These valves are mainly used in mobile and industrial applications where leak-tight shut-off functions are crucially important. Examples are loads, tensions, or clamping forces that must be held without leakage. For self-assembly, please refer to the section related data sheets.

WWW.SUMY.IR

Technical data

General characteristics	Description, value, unit
Function group	directional valve
Function	2-way/2-position
Design	screw-in cartridge valve
Controls	switching solenoid
Characteristic	pilot operated, poppet type
Construction size	NG 16
Thread size	M42×2
Mounting attitude	unrestricted
Weight	1.20 kg
Cavity acc. ISO	fits into ISO 7789: 42-06-0-07
Cavity acc. factory standard	EB
Tightening torque steel	200 Nm
Tightening torque aluminium	200 Nm
Tightening torque tolerance	± 10 %
Minimum ambient temperature	- 30 °C
Maximum ambient temperature	+ 50 °C
Surface protection	all external parts with zinc-nickel plating according to DIN EN ISO 19598
Sealing material	see ordering code
Seal kit order number	NBR: DS-351-N / FKM: DS-351-V

Hydraulic characteristics	Description, value, unit
Maximum operating pressure	420 bar
Maximum flow rate	350 l/min
Flow direction	see symbol
Hydraulic fluid	HL and HLP mineral oil according to DIN 51 524; other fluids on request!
Minimum fluid temperature	- 30 °C
Maximum fluid temperature	+ 80 °C
Viscosity range	10 ... 500 mm^2/s (cSt)
Recommended viscosity range	15 ... 250 mm^2/s (cSt)
Minimum fluid cleanliness (cleanliness class according to ISO 4406:1999)	class 20/18/15

Electric characteristics	Description, value, unit
Actuator type	solenoid coil
Solenoid coils type	D36
Supply voltage DC	12 V DC 24 V DC
Supply voltage AC	115/230 (50 ... 60 Hz) V AC
Supply voltage tolerance	± 10 %
Nominal power consumption	Version "N": V DC = 27 W / V AC = 25 W Version "L": V DC = 8 W
Relative duty cycle	100 %
Electrical connection coil	several connection types available, see ordering code
Protection class solenoid coil to ISO 20 653 / EN 60 529	several classes of protection available, see ordering code (with appropriate mating connector and proper fitting and sealing)

Performance graphs

measured with oil viscosity 33.0 mm²/s (cSt), coil at steady-state temperature and 10 % undervoltage

p = f (Q) Performance limit

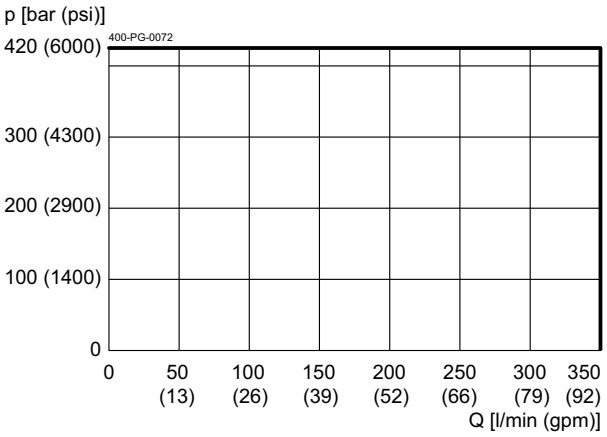

Δp = f (Q) Pressure drop-flow rate characteristic

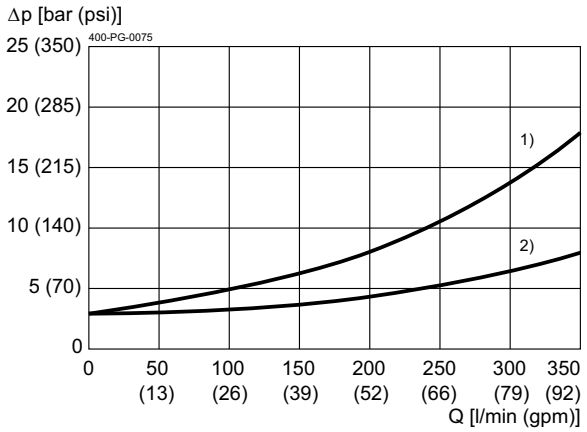

cavity type EB with annular groove
1) 1 → 2
2) 2 → 1

Δp = f (Q) Pressure drop-flow rate characteristic

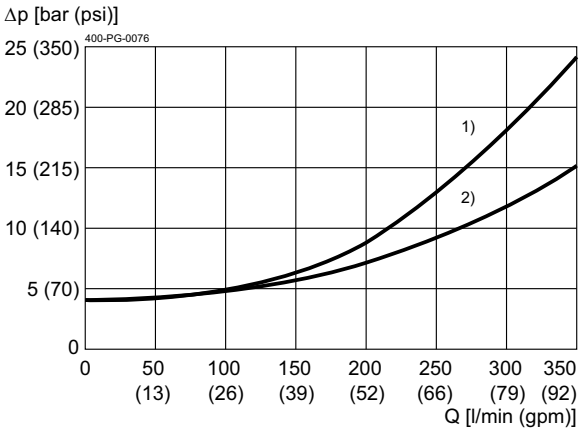

cavity type EB without annular groove
1) 1 → 2
2) 2 → 1

Installation

Beispiel für die Masseinheit:
Example for the dimensional units:

0.79 = 0.79 mm millimeter
(.031) = 0.031'' inch

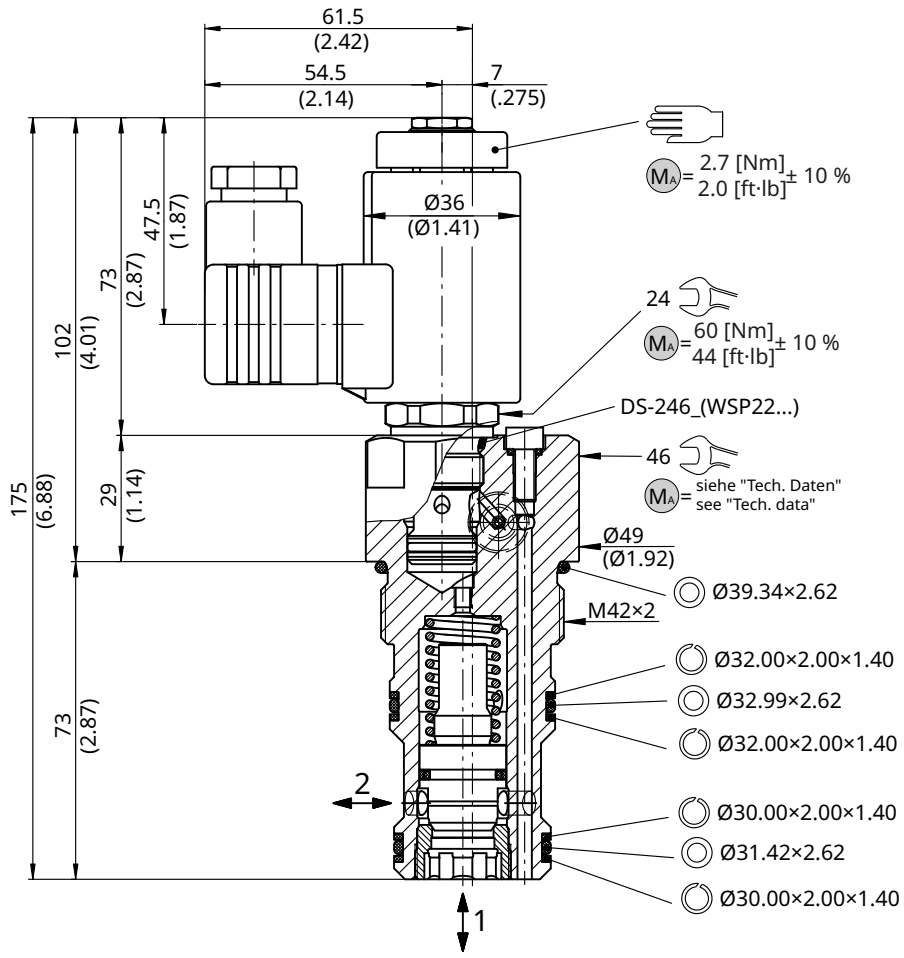

ATTENTION!
Only qualified personnel with mechanical skills may carry out the following work:

- installation and, if necessary, adjustment.
- replacement of slip-on solenoid coil, if present (solenoid coil type; see "Technical Data").
- inspection and, if necessary, replacement of the seals shown in the illustration. New seals must only be installed after being oiled or greased (seal kit; see "Technical Data").

NOTE!
- Observe tightening torques M_A .

Ordering code

Ex. W R 22G N B A – 16 _ – 3 24 D _

W	=	directional valve
R	=	check valve function, pilot operated
22G	=	2-way/2-position, normally closed
N	=	electrically operated, V DC = 27 W / V AC = 25 W (standard)
L	=	electrically operated, V DC = 8 W *
B	=	cavity type EB
A ... Q	=	standard model according to valid data sheet (standard)
Z ... R	=	special model after consultation
16	=	nominal size 16
(blank)	=	NBR (nitril-butadien-rubber / BUNA) seals (standard)
V	=	FKM (fluorocarbon rubber / VITON) seals * (special seals - please consult BUCHER)
1 ... 9	=	technical design no. (omit when ordering)
...	=	voltage e.g. 24 (24 V)
D	=	current DC
A	=	current AC
(blank)	=	DIN EN 175301-803 connection, 3-pole 2 P+E with mating plug (IP 65) (standard)
M100	=	DIN EN 175301-803 connection, 3-pole 2 P+E
C	=	Kostal plug connection (IP 65)
JT	=	Junior Timer radial plug connection (with protection diode, IP 65)
IT	=	Junior Timer axial plug connection (with protection diode, IP 65)
D	=	Deutsch plug connection 45° DT04-2P (IP 67/69K)
DT	=	Deutsch plug connection 45° DT04-2P (with protection diode, IP 67/69K)
F	=	flying leads (500 mm)

mating plug not supplied

IMPORTANT!
* = In the WR22GLBA-16V-... with 8-Watt coil, the piston of the pilot valve WSP22GLA1V-... is also in the FKM (Viton) version fitted with an NBR O-ring.

Related data sheets

Reference	Description
400-P-040011	form tools
400-P-080111	cavity EB
400-P-750115	threaded port body GEBAA
400-P-120110	solenoid coil D36

info.ch@bucherhydraulics.com **www.bucherhydraulics.com**

© 2026 by Bucher Hydraulics AG Frutigen, 3714 Frutigen, Switzerland

All rights reserved.
Data is provided for the purpose of product description only, and must not be construed as warranted characteristics in the legal sense. The information does not relieve users from the duty of conducting their own evaluations and tests. Because the products are subject to continual improvement, we reserve the right to amend the product specifications contained in this catalogue.

BUCHER hydraulics

WWW.SUMY.IR

Directional valve 2-way/2-position

Q_{max} = 140 l/min, p_{max} = 350 bar
switching solenoid, pilot operated, poppet type
Type series: WRA22G_DA-10...

- Screw-in cartridge valve
- For cavity DD
- All external parts with zinc-nickel coating according to DIN EN ISO 19598
- Installation in threaded port body type DD-12 / DDY-12
- The slip-on coil can be rotated, and it can be replaced without opening the hydraulic envelope
- High pressure wet-armature solenoids
- Various plug-connector systems and voltages are available
- Seat tight shut-off
- High flow rates
- Also available as stack valve

Description

The 2-way/2-position solenoid-operated directional seat valves, series WRA22_D..., are size 10, two stage, screw-in valves with an M24x1,5 mounting thread. The main and pilot stages are both designed on the poppet/seat principle, therefore virtually leak-free. The straightforward design delivers a good price/performance ratio and outstanding head loss/ flow ratings. All external parts of the screw-in valves are zinc-nickel plated, and are thus suitable for use in the harshest operating environments. The slip-on coils can be replaced without opening the hydraulic envelope and can be positioned at any angle through 360°. These valves are primarily used as pilot valves in certain mobile and industrial applications where leak-tight shut-off functions are crucially important. Examples are where loads, tensions, or clamping forces must be held without leakage. For self-assembly, please refer to the section related data sheets.

Symbol

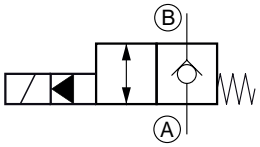

Technical Data

General Characteristics	Description, value, unit
Function group	Directional valve
Function	2-way/2-position
Design	Screw-in cartridge valve
Controls	switching solenoid
Characteristic	pilot operated, poppet type
Construction size	nominal size 10
Thread size	M24×1,5
Mounting attitude	unrestricted
Weight	0.50 kg
Cavity acc. factory standard	For cavity DD
Tightening torque steel	65 Nm
Tightening torque aluminium	50 Nm
Tightening torque tolerance	± 10 %
Minimum ambient temperature	- 25 °C
Maximum ambient temperature	+ 50 °C
Surface protection	All external parts with zinc-nickel coating according to DIN EN ISO 19598
Available seal types	several seal types available, see ordering code
Seal kit order number	NBR: DS-276-N / FKM: DS-276-V

Hydraulic Characteristics	Description, value, unit
Maximum operating pressure	350 bar
Maximum flow rate	140 l/min
Flow direction	see symbol
Hydraulic fluid	HL and HLP mineral oil according to DIN 51 524; other fluids on request!
Minimum fluid temperature	- 25 °C
Maximum fluid temperature	+ 80 °C
Viscosity range	10 ... 500 mm^2/s (cSt)
Recommended viscosity range	15 ... 250 mm^2/s (cSt)
Minimum fluid cleanliness (cleanlineless class according to ISO 4406:1999)	class 20/18/15

Electric Characteristics	Description, value, unit
Actuator type	solenoid coil
Solenoid coils type	D36
Supply voltage DC	12/24 V DC
Supply voltage AC	115/230 V AC (50 ... 60 Hz)
Supply voltage tolerance	± 10 %
Maximum permissible power consumption	Version "E": V DC = 17 W / V AC = 17 W Version "N": V DC = 27 W / V AC = 25 W
Switching time	Version "E": 28...108 ms (energized) / 90...292 ms (de-energized) Version "N": 28...180 ms (energized) / 68...102 ms (de-energized)

Electric Characteristics	Description, value, unit
Relative duty cycle	100 %
Electrical connection coil	several connection types available, see ordering code
Protection class solenoid coil to ISO 20 653 / EN 60 529	several classes of protection available, see ordering code (with appropriate mating connector and proper fitting and sealing)

NOTE!
The switching time can be strongly dependent on flow rate, pressure, oil viscosity and the dwell time under pressure. In practice, the switching time may therefore deviate from the specified value range.

Performance graphs

measured with oil viscosity 33.0 mm²/s (cSt), coil at steady-state temperature and 10 % undervoltage

Δp = f (Q) Pressure drop-flow rate characteristic

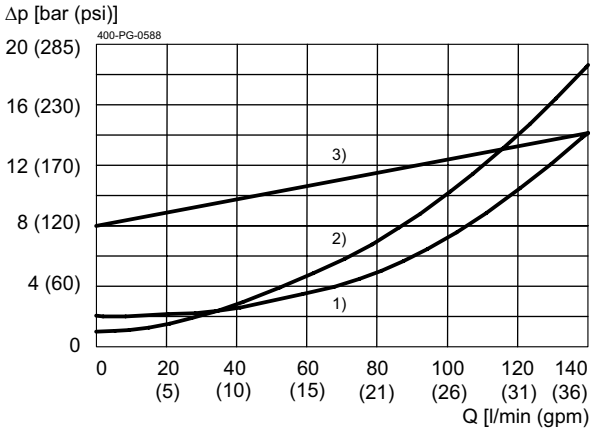

1) = B → A, energized
2) = A → B, energized
3) = B → A, de-energized

Version "E" – 17 W

Δp = f (Q) Pressure drop-flow rate characteristic

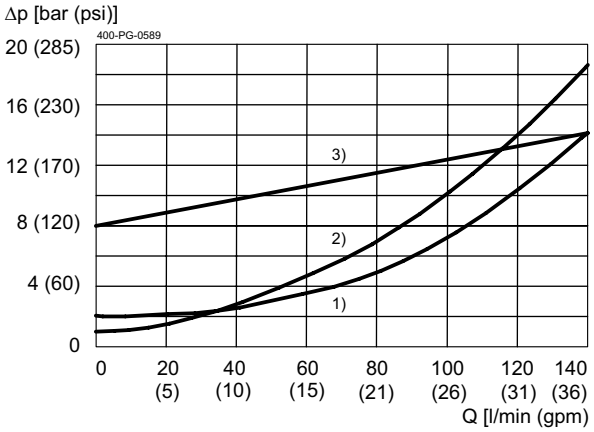

1) = B → A, energized
2) = A → B, energized
3) = B → A, de-energized

Version "N" – 27/25 W

Dimensions and sectional view

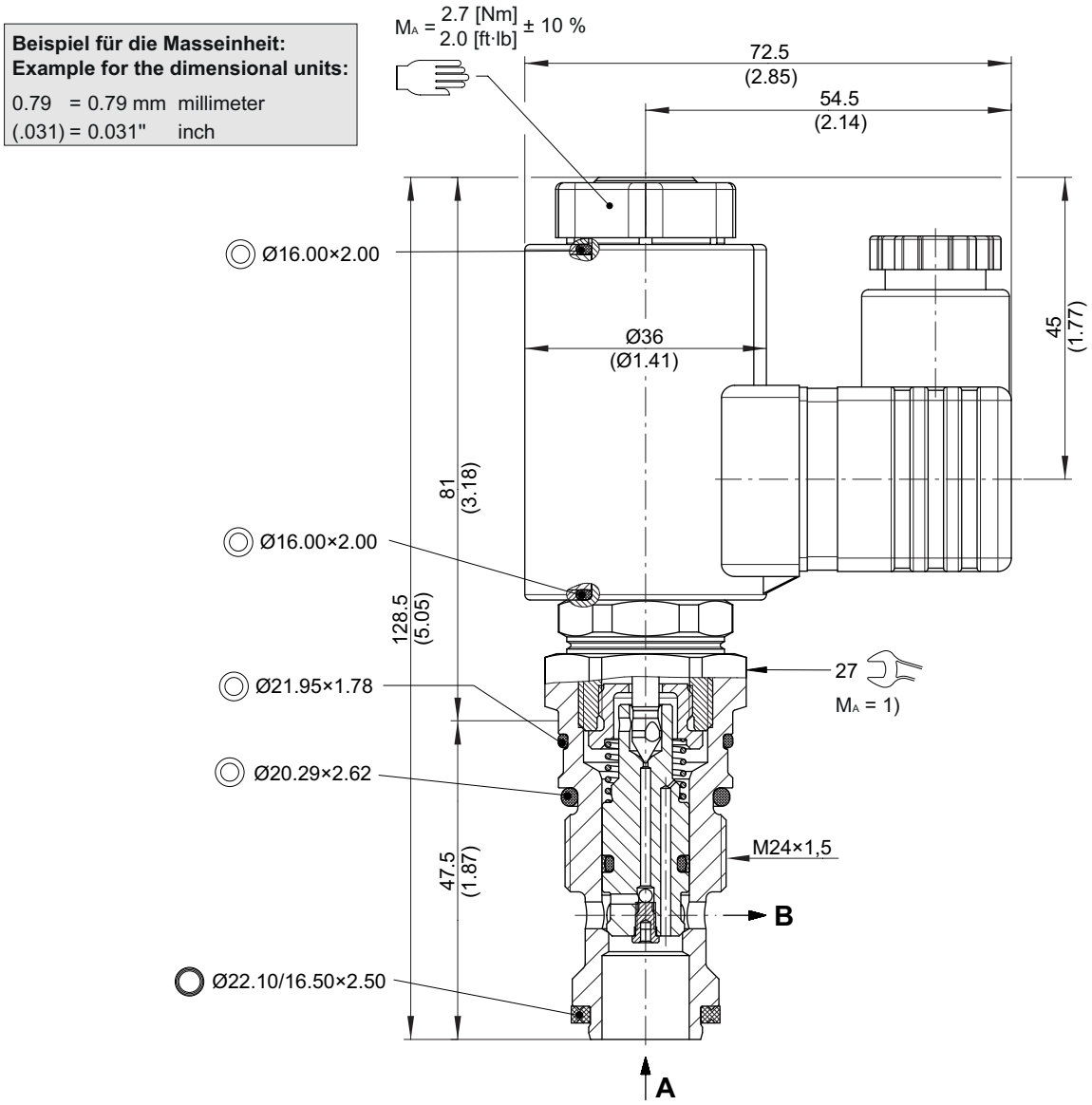

Installation information

NOTE!
1) When fitting the screw-in cartridge valve, use the specified tightening torque. The value can be found in the chapter "technical data".

NOTE!
The seals are not available individually. The seal kit order number can be found in the chapter "Technical data".

ATTENTION!
Only qualified personnel with mechanical skills may carry out any maintenance work. Generally, the only work that should ever be undertaken is to check, and possibly replace, the seals. When changing seals, oil or grease the new seals thoroughly before fitting them.

Ordering code

Ex. W R A 22G E D A - 10 _ - 3 24 D - _

W	=	directional valve
R	=	check valve function, pilot operated
A	=	blocking direction A to B
22G	=	2-way/2-position, normally closed
E	=	electrically operated, V DC = 17 W / V AC = 17 W *(standard)*
N	=	electrically operated, V DC = 27 W / V AC = 25 W
D	=	cavity type DD
A ... Q	=	standard model according to valid data sheet *(standard)*
Z ... R	=	special model after consultation
10	=	nominal size 10
(blank)	=	NBR (nitril-butadien-rubber / BUNA) seals *(standard)*
V	=	FKM (fluorocarbon rubber / VITON) seals *(special seals - please consult BUCHER)*
1 ... 9	=	technical design no. (omit when ordering)
...	=	voltage e.g. 24 (24 V)
D	=	current DC
A	=	current AC
(blank)	=	DIN EN 175301-803 connection, 3-pole 2 P+E with mating plug, IP 65 *(standard)*
M100	=	DIN EN 175301-803 connection, 3-pole 2 P+E
C	=	Kostal plug connection (IP 65)
JT	=	Junior Timer radial plug connection (with protection diode, IP 65)
IT	=	Junior Timer axial plug connection (with protection diode, IP 65)
D	=	Deutsch plug connection DT04-2P (IP 67/69K)
DT	=	Deutsch plug connection DT04-2P (with protection diode, IP 67/69K)
S	=	AMP Superseal 1.5 (IP 67) / Metri-Pack 150 (IP 65) plug connection
F	=	flying leads (500 mm)

mating plug not supplied

Related data sheets

Reference	Description
400-P-040011	Forming tools
400-P-060121	Cavity DD
400-P-740111	Threaded port body DD-12
400-P-740112	Threaded port body DDY-12
400-P-120110	Solenoid coil D36

info.ch@bucherhydraulics.com **www.bucherhydraulics.com**

© 2021 by Bucher Hydraulics AG Frutigen, 3714 Frutigen, Switzerland

All rights reserved.
Data is provided for the purpose of product description only, and must not be construed as warranted characteristics in the legal sense. The information does not relieve users from the duty of conducting their own evaluations and tests. Because the products are subject to continual improvement, we reserve the right to amend the product specifications contained in this catalogue.

BUCHER hydraulics
WWW.SUMY.IR

Directional valve 2-way/2-position

Q_{max} = 140 l/min, p_{max} = 350 bar
pilot operated, poppet type, switching solenoid
Type series: WRA22G_CA-10...

- Screw-in cartridge valve
- For cavity DC
- All external parts with zinc-nickel plating according to DIN EN ISO 19598
- Installation in threaded port body type DC-12
- Seat tight shut-off
- High flow rates
- Also available as stack valve
- The slip-on coil can be rotated, and it can be replaced without opening the hydraulic envelope
- High pressure wet-armature solenoids
- Various plug-connector systems and voltages are available

Phase-Out

Description

The 2-way/2-position solenoid-operated directional seat valves, series WRA22_C..., are size 10, two stage, screw-in valves with an M24×1.5 mounting thread. They are designed on the poppet/seat principle, and the A to B flow path is therefore virtually leak-free. "De-energized closed" and "de-energized open" functions are available. The switching times can be influenced by using solenoid coils with differing power ratings. The straightforward design delivers a good price/performance ratio and outstanding head-loss/flow ratings. These 2/2 solenoid operated seat valves are used in mobile and industrial applications where leak-tight shut-off functions are crucially important. Examples are where loads, tensions, or clamping forces must be held without leakage. All external parts of the cartridge are zinc-nickel plated and are thus suitable for use in the harshest operating environments. The slip-on coils can be replaced without opening the hydraulic envelope and can be positioned at any angle through 360°. For self-assembly, please refer to the section related data sheets.

Symbol

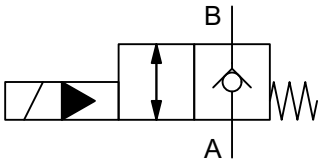

Technical data

General characteristics	Description, value, unit
Product status	Phase-Out
Alternative product	WRA22G_DA-10... (400-P-131121)
Function group	Directional valve
Function	2-way/2-position
Design	Screw-in cartridge valve
Controls	switching solenoid
Characteristic	pilot operated, poppet type
Construction size	NG 10
Thread size	M24×1,5
Mounting attitude	unrestricted
Weight	0.50 kg
Cavity acc. factory standard	For cavity DC
Tightening torque steel	100 Nm
Tightening torque aluminium	100 Nm
Tightening torque tolerance	± 10 %
Minimum ambient temperature	- 25 °C
Maximum ambient temperature	+ 50 °C
Surface protection	All external parts with zinc-nickel plating according to DIN EN ISO 19598
Sealing material	see ordering code
Seal kit order number	NBR: DS-276-N / FKM: DS-276-V

Hydraulic characteristics	Description, value, unit
Maximum operating pressure	350 bar
Maximum flow rate	140 l/min
Flow direction	see symbol
Hydraulic fluid	HL and HLP mineral oil according to DIN 51 524; other fluids on request!
Minimum fluid temperature	- 25 °C
Maximum fluid temperature	+ 80 °C
Viscosity range	10 ... 500 mm^2/s (cSt)
Recommended viscosity range	15 ... 250 mm^2/s (cSt)
Minimum fluid cleanliness (cleanlineless class according to ISO 4406:1999)	class 20/18/15

Electric characteristics	Description, value, unit
Actuator type	solenoid coil
Solenoid coils type	D36
Supply voltage DC	12/24 V DC
Supply voltage AC	115/230 (50 ... 60 Hz) V AC
Supply voltage tolerance	± 10 %
Nominal power consumption	Version "E": V DC = 17 W / V AC = 17 W Version "N": V DC = 27 W / V AC = 25 W

Phase-Out

WWW.SUMY.IR

Electric characteristics	Description, value, unit
Switching time	Version "E": 28...108 ms (energized) / 90...292 ms (de-energized) Version "N": 28...180 ms (energized) / 68...102 ms (de-energized)
Relative duty cycle	100 %
Electrical connection coil	several connection types available, see ordering code
Protection class solenoid coil to ISO 20 653 / EN 60 529	several classes of protection available, see ordering code (with appropriate mating connector and proper fitting and sealing)

NOTE!
The switching time can be strongly dependent on flow rate, pressure, oil viscosity and the dwell time under pressure. In practice, the switching time may therefore deviate from the specified value range.

Performance graphs

measured with oil viscosity 33.0 mm²/s (cSt), coil at steady-state temperature and 10 % undervoltage

Δp = f (Q) Pressure drop-flow rate characteristic

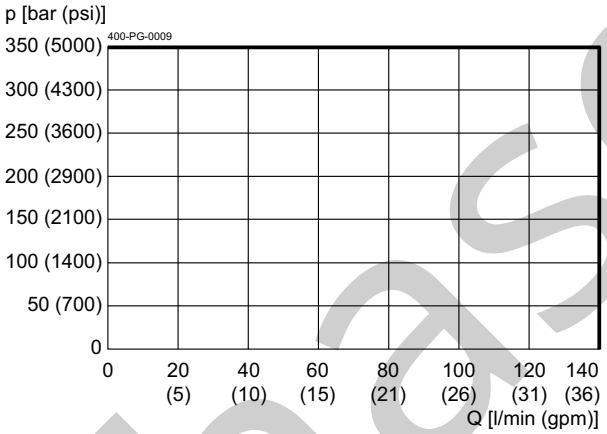

Δp = f (Q) Pressure drop-flow rate characteristic
Version "E" – 17 W

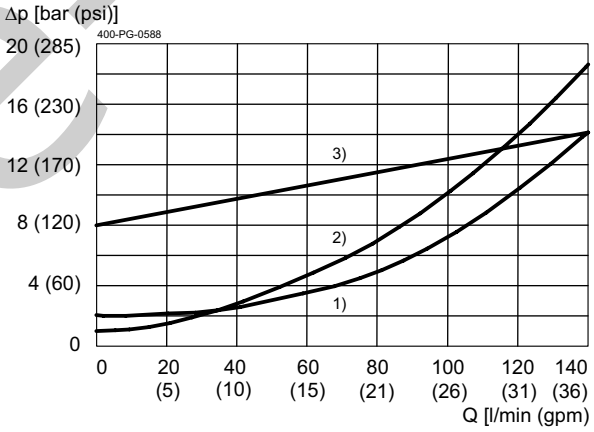

1) = B → A, energized
2) = A → B, energized
3) = B → A, de-energized

Phase-Out

BUCHER
hydraulics
WWW.SUMY.IR

Δp = f (Q) Pressure drop-flow rate characteristic

Version "N" – 27/25 W

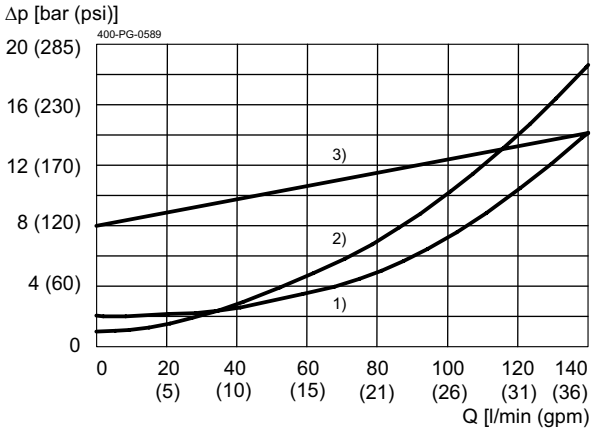

1) = B → A, energized
2) = A → B, energized
3) = B → A, de-energized

Phase-Out

Dimensions and sectional view

Beispiel für die Masseinheit:
Example for the dimensional units:

0.79 = 0.79 mm millimeter
(.031) = 0.031" inch

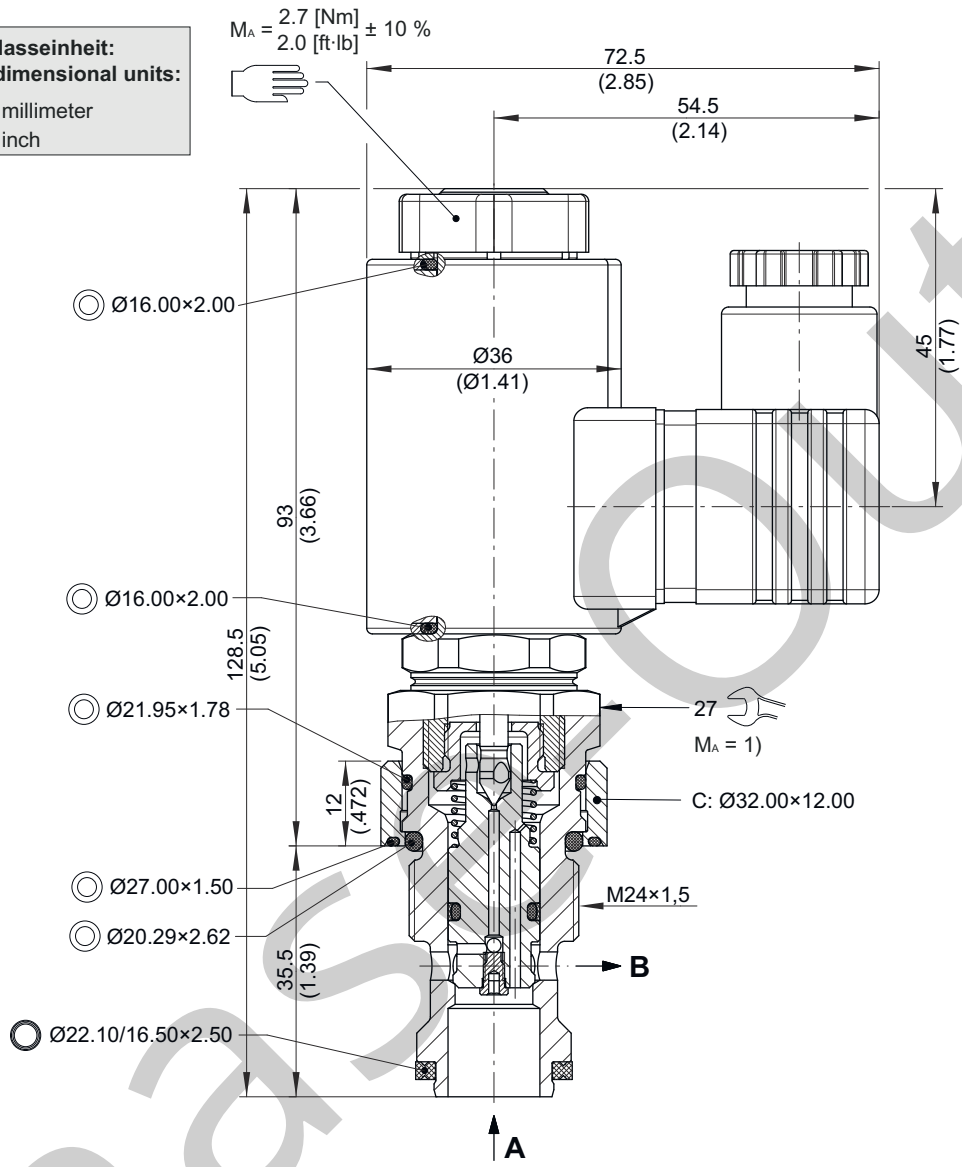

Installation information

NOTE!
1) When fitting the screw-in cartridge valve, use the specified tightening torque. The value can be found in the chapter "Technical data".

ATTENTION!
Only qualified personnel with mechanical skills may carry out any maintenance work. Generally, the only work that should ever be undertaken is to check, and possibly replace, the seals. When changing seals, oil or grease the new seals thoroughly before fitting them.

NOTE!
The seals are not available individually. The seal kit order number can be found in the chapter "Technical data".

Phasout

Ordering code

Ex. W R A 22G E C A - 10 _ - 3 24 D - _

W	=	directional valve
R	=	check valve function, pilot operated
A	=	blocking direction A to B
22G	=	2-way/2-position, normally closed
E	=	electrically operated, V DC = 17 W / V AC = 17 W *(standard)*
N	=	electrically operated, V DC = 27 W / V AC = 25 W
C	=	cavity type DC
A ... Q	=	standard model according to valid data sheet *(standard)*
Z ... R	=	special model after consultation
10	=	nominal size 10
(blank)	=	NBR (nitril-butadien-rubber / BUNA) seals *(standard)*
V	=	FKM (fluorocarbon rubber / VITON) seals *(special seals - please consult BUCHER)*
1 ... 9	=	technical design no. (omit when ordering)
...	=	voltage e.g. 24 (24 V)
D	=	current DC
A	=	current AC
(blank)	=	DIN EN 175301-803 connection, 3-pole 2 P+E with mating plug, IP 65 *(standard)*
M100	=	DIN EN 175301-803 connection, 3-pole 2 P+E
C	=	Kostal plug connection (IP 65)
JT	=	Junior Timer radial plug connection (with protection diode, IP 65)
IT	=	Junior Timer axial plug connection (with protection diode, IP 65)
D	=	Deutsch plug connection DT04-2P (IP 67/69K)
DT	=	Deutsch plug connection DT04-2P (with protection diode, IP 67/69K)
S	=	AMP Superseal 1.5 (IP 67) / Metri-Pack 150 (IP 65) plug connection
F	=	flying leads (500 mm)

mating plug not supplied

Related data sheets

Reference	Description
400-P-040011	Form tools
400-P-060111	Cavity DC
400-P-740101	Threaded port body DC-12
400-P-120110	Solenoid coil D36

Phase-Out

info.ch@bucherhydraulics.com www.bucherhydraulics.com

© 2025 by Bucher Hydraulics AG Frutigen, 3714 Frutigen, Switzerland

All rights reserved.
Data is provided for the purpose of product description only, and must not be construed as warranted characteristics in the legal sense. The information does not relieve users from the duty of conducting their own evaluations and tests. Because the products are subject to continual improvement, we reserve the right to amend the product specifications contained in this catalogue.

WWW.SUMY.IR

Directional valve 2-way/2-position

Q_{max} = 40 l/min, p_{max} = 350 bar
Pilot operated, poppet type, switching solenoid with emergency override
Type series: WR22O_A5...

- Screw-in cartridge valve for cavity AL
- All external parts with zinc-nickel plating according to DIN EN ISO 19598
- Installation in threaded port body type GALA
- Seat tight shut-off
- Compact construction
- High flow rates
- Low head loss
- Reliable switching, even after long dwell times
- With manual override
- The slip-on coil can be rotated, and it can be replaced without opening the hydraulic envelope
- High pressure wet-armature solenoids
- Various plug-connector systems and voltages are available

Symbol

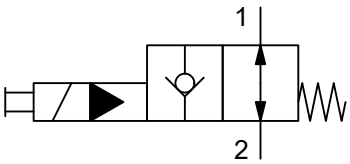

Description

The 2-way/2-position solenoid-operated directional seat valves, series WR22_A..., are size 5, two stage, pressure balanced screw-in valves with a 3/4-16 UNF mounting thread. The main and pilot stages are both designed on the poppet/seat principle, and the 1 to 2 flow path is therefore virtually leak-free. The straightforward design delivers a good price/performance ratio and outstanding head loss/ flow ratings. All external parts of the screw-in valves are zinc-nickel plated and are thus suitable for use in the harshest operating environments. The slip-on coils can be replaced without opening the hydraulic envelope and can be positioned at any angle through 360°. These valves are primarily used as pilot valves in certain mobile and industrial applications where leak-tight shut-off functions are crucially important. Examples are where loads, tensions, or clamping forces must be held without leakage. For self-assembly, please refer to the section related data sheets.

Technical data

General characteristics	Description, value, unit
Function group	directional valve
Function	2-way/2-position
Design	screw-in cartridge valve
Controls	switching solenoid with emergency override
Characteristic	pilot operated, poppet type
MTTFd value	150 years
Construction size	NG 5
Thread size	3/4-16 UNF-2A
Mounting attitude	unrestricted
Weight	0.40 kg
Cavity acc. factory standard	AL
Tightening torque steel	50 Nm
Tightening torque aluminium	50 Nm
Tightening torque tolerance	± 10 %
Minimum ambient temperature	- 30 °C
Maximum ambient temperature	+ 50 °C
Surface protection	all external parts with zinc-nickel plating according to DIN EN ISO 19598
Sealing material	see ordering code
Seal kit order number	NBR: DS-246-N / FKM: DS-246-V

Hydraulic characteristics	Description, value, unit
Maximum operating pressure	350 bar
Maximum flow rate	40 l/min
Flow direction	see symbol
Hydraulic fluid	HL and HLP mineral oil according to DIN 51 524; other fluids on request!
Minimum fluid temperature	- 30 °C
Maximum fluid temperature	+ 80 °C
Viscosity range	10 ... 500 mm^2/s (cSt)
Recommended viscosity range	15 ... 250 mm^2/s (cSt)
Minimum fluid cleanliness (cleanlineless class according to ISO 4406:1999)	class 20/18/15

NOTE!
The switching safety of the valve is achieved by the volume flow and pressure drop (Δp).

Electric characteristics	Description, value, unit
Actuator type	solenoid coil
Solenoid coils type	D36
Supply voltage DC	12/24 V DC
Supply voltage AC	115/230 (50 ... 60 Hz) V AC
Supply voltage tolerance	± 10 %
Nominal power consumption	Version "E": V DC = 17 W / V AC = 17 W Version "N": V DC = 27 W / V AC = 25 W
Switching time	Version "E": 35...105 ms (energized) / 20...70 ms (de-energized) Version "N": 25...135 ms (energized) / 20...40 ms (de-energized)
Relative duty cycle	100 %
Electrical connection coil	several connection types available, see ordering code
Protection class solenoid coil to ISO 20 653 / EN 60 529	several classes of protection available, see ordering code (with appropriate mating connector and proper fitting and sealing)

NOTE!
The switching time can be strongly dependent on flow rate, pressure, oil viscosity and the dwell time under pressure. In practice, the switching time may therefore deviate from the specified value range.

Performance graphs

measured with oil viscosity 33.0 mm²/s (cSt), coil at steady-state temperature and 10 % undervoltage

p = f (Q) Performance limit

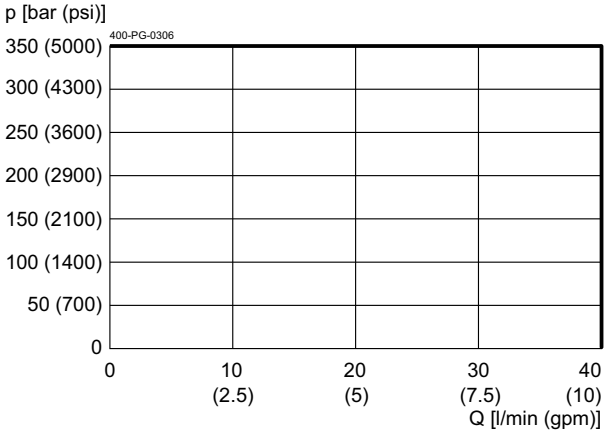

Δp = f (Q) Pressure drop-flow rate characteristic

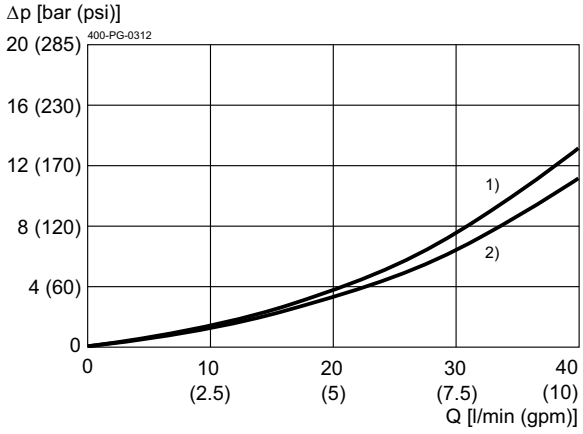

Version "E" - 17 W / Version "N" - 27/25 W
1) 2 → 1, solenoid de-energized
2) 1 → 2, solenoid de-energized

Installation

Beispiel für die Masseinheit:
Example for the dimensional units:

0.79 = 0.79 mm millimeter
(.031) = 0.031" inch

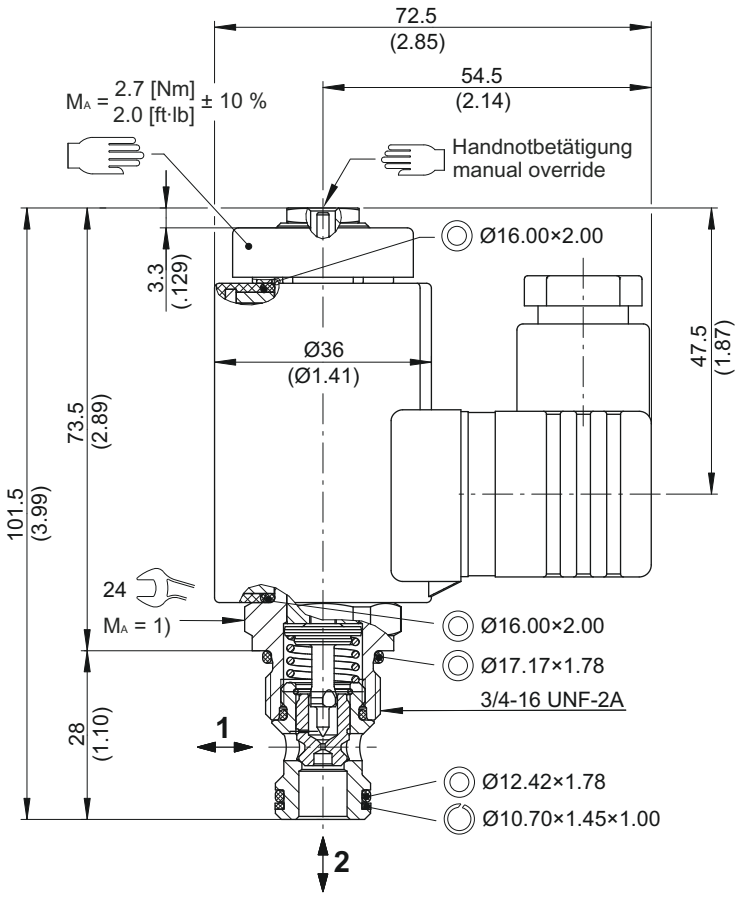

NOTE!
1) When fitting the screw-in cartridge valve, use the specified tightening torque. The value can be found in the chapter "Technical data".

ATTENTION!
Only qualified personnel with mechanical skills may carry out any maintenance work. Generally, the only work that should ever be undertaken is to check, and possibly replace, the seals. When changing seals, oil or grease the new seals thoroughly before fitting them.

NOTE!
The seals are not available individually. The seal kit order number can be found in the chapter "Technical data".

Ordering code

Ex. W R 22O E A 5 _ - 5 24 D _

W	=	directional valve
R	=	check valve function, pilot operated
22O	=	2-way/2-position, normally open
E	=	electrically operated, V DC = 17 W / V AC = 17 W *(standard)*
N	=	electrically operated, V DC = 27 W / V AC = 25 W
A	=	thread size 3/4-16 UNF-2A for cavity AL
5	=	nominal size 5
(blank)	=	NBR (nitril-butadien-rubber / BUNA) seals *(standard)*
V	=	FKM (fluorocarbon rubber / VITON) seals *(special seals - please consult BUCHER)*
1 ... 9	=	technical design no. (omit when ordering)
...	=	voltage e.g. 24 (24 V)
D	=	current DC
A	=	current AC
(blank)	=	DIN EN 175301-803 connection, 3-pole 2 P+E with mating plug (IP 65) *(standard)*
M100	=	DIN EN 175301-803 connection, 3-pole 2 P+E
C	=	Kostal plug connection (IP 65)
JT	=	Junior Timer radial plug connection (with protection diode, IP 65)
IT	=	Junior Timer axial plug connection (with protection diode, IP 65)
D	=	Deutsch plug connection 45° DT04-2P (IP 67/69K)
DT	=	Deutsch plug connection 45° DT04-2P (with protection diode, IP 67/69K)
S	=	AMP Superseal 1.5 (IP 67) / Metri-Pack 150 (IP 65) plug connection
F	=	flying leads (500 mm)

mating plug not supplied

Related data sheets

Reference	Description
400-P-040011	form tools
400-P-040171	cavity AL
400-P-720101	threaded port body GALA
400-P-120110	solenoid coil D36
400-P-010101	MTTFd Values for Hydraulic Valves

info.ch@bucherhydraulics.com **www.bucherhydraulics.com**

© 2026 by Bucher Hydraulics AG Frutigen, 3714 Frutigen, Switzerland

All rights reserved.
Data is provided for the purpose of product description only, and must not be construed as warranted characteristics in the legal sense. The information does not relieve users from the duty of conducting their own evaluations and tests. Because the products are subject to continual improvement, we reserve the right to amend the product specifications contained in this catalogue.

BUCHER hydraulics

WWW.SUMY.IR

Directional valve 2-way/2-position

Q_{max} = 40 l/min, p_{max} = 420 bar
pilot operated, poppet type, switching solenoid
Type series: WRP22OEA5...

- Screw-in cartridge valve
- For cavity AL
- All external parts with zinc-nickel coating according to DIN EN ISO 19598
- Installation in threaded port body type GALA
- The slip-on coil can be rotated, and it can be replaced without opening the hydraulic envelope
- High pressure wet-armature solenoids
- Various plug-connector systems and voltages are available
- High-pressure model
- Seat tight shut-off
- Compact construction
- Low head loss

Description

The 2-way/2-position solenoid operated directional seat valves, series WRP22..., are size 5, two-stage, screw-in valves with a 3/4-16 UNF-2A mounting thread. The main and pilot stages are both designed on the poppet/seat principle, and the 1 to 2 flow path is therefore virtually leak-free. The straightforward design delivers an outstanding price/performance ratio and good headloss/flow ratings. All external parts of the screw-in valves are zinc-nickel plated, and are thus suitable for use in the harshest operating environments. The slip-on coils can be replaced without opening the hydraulic envelope and can be positioned at any angle through 360°. These valves are primarily used as pilot valves in certain mobile and industrial applications where leak-tight shut-off functions are crucially important. Examples are where loads, tensions, or clamping forces must be held without leakage. For self-assembly, please refer to the section related data sheets.

Symbol

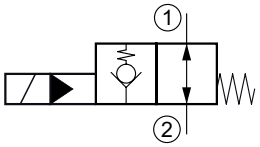

Technical Data

General Characteristics	Description, value, unit
Function group	Directional valve
Function	2-way/2-position
Design	Screw-in cartridge valve
Controls	switching solenoid
Characteristic	pilot operated, poppet type
Construction size	nominal size 5
Thread size	3/4-16 UNF-2A
Mounting attitude	unrestricted
Weight	0.40 kg
Cavity acc. factory standard	For cavity AL
Tightening torque steel	60 Nm
Tightening torque aluminium	60 Nm
Tightening torque tolerance	± 10 %
Minimum ambient temperature	- 25 °C
Maximum ambient temperature	+ 50 °C
Surface protection	All external parts with zinc-nickel coating according to DIN EN ISO 19598
Available seal types	several seal types available, see ordering code
Seal kit order number	NBR: DS-246-N / FKM: DS-246-V

Hydraulic Characteristics	Description, value, unit
Maximum operating pressure	420 bar
Maximum flow rate	40 l/min
Flow direction	see symbol
Hydraulic fluid	HL and HLP mineral oil according to DIN 51 524; other fluids on request!
Minimum fluid temperature	- 25 °C
Maximum fluid temperature	+ 80 °C
Viscosity range	10 ... 500 mm^2/s (cSt)
Recommended viscosity range	15 ... 250 mm^2/s (cSt)
Minimum fluid cleanliness (cleanlineless class according to ISO 4406:1999)	class 20/18/15

Electric Characteristics	Description, value, unit
Actuator type	solenoid coil
Solenoid coils type	D36
Supply voltage DC	12/24 V DC
Supply voltage AC	115/230 V AC (50 ... 60 Hz)
Supply voltage tolerance	± 10 %
Maximum permissible power consumption	V DC / V AC = 17 W
Relative duty cycle	100 %
Electrical connection coil	several connection types available, see ordering code
Protection class solenoid coil to ISO 20 653 / EN 60 529	several classes of protection available, see ordering code (with appropriate mating connector and proper fitting and sealing)

Performance graphs

measured with oil viscosity 33.0 mm²/s (cSt), coil at steady-state temperature and 10 % undervoltage

p = f (Q) Performance limit

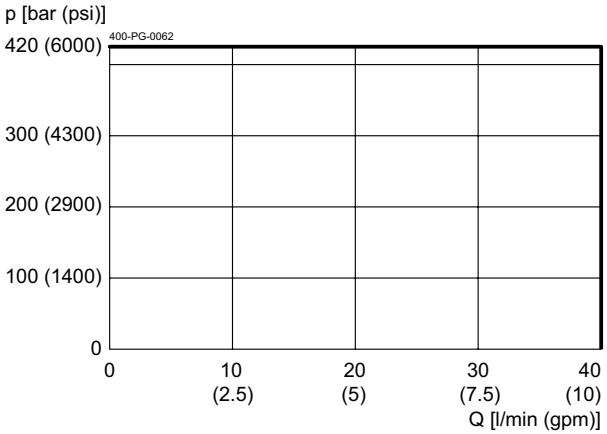

Δp = f (Q) Pressure drop-flow rate characteristic

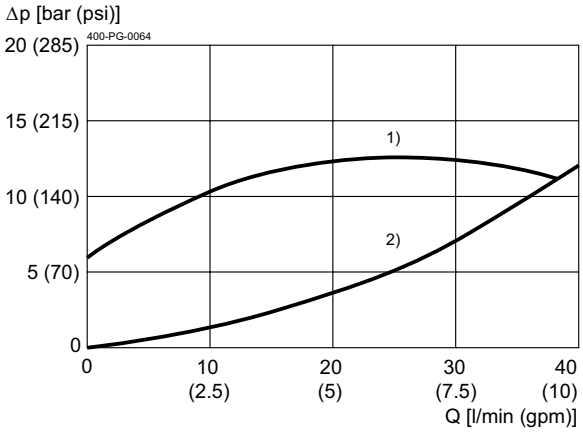

1) 2 → 1, solenoid de-energizing
2) 2 → 1 / 1 → 2, solenoid energizing

Dimensions and sectional view

Beispiel für die Masseinheit:
Example for the dimensional units:

0.79 = 0.79 mm millimeter
(.031) = 0.031" inch

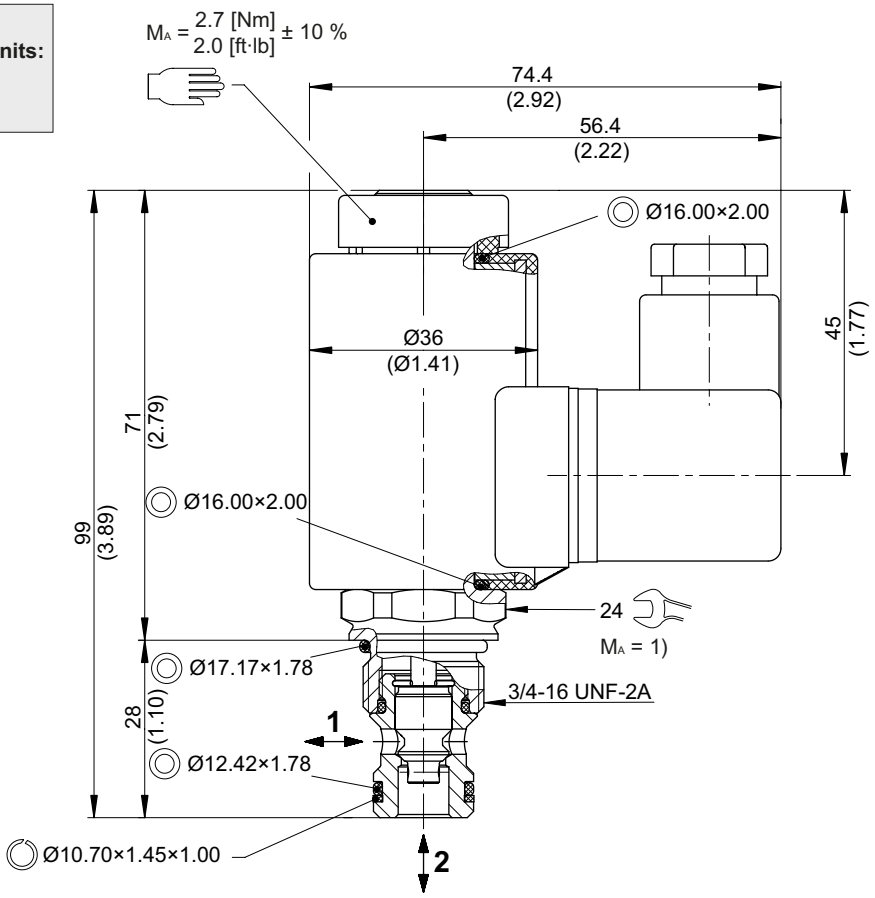

Installation information

NOTE!
1) When fitting the screw-in cartridge valve, use the specified tightening torque. The value can be found in the chapter "technical data".

NOTE!
The seals are not available individually. The seal kit order number can be found in the chapter "Technical data".

ATTENTION!
Only qualified personnel with mechanical skills may carry out any maintenance work. Generally, the only work that should ever be undertaken is to check, and possibly replace, the seals. When changing seals, oil or grease the new seals thoroughly before fitting them.

Ordering code

Ex. W R P 22O E A 5 _ - 2 24 D _

W	=	directional valve
R	=	check valve function, pilot operated
P	=	high-pressure version (420 bar)
22O	=	2-way/2-position, normally open
E	=	electrically operated, V DC / V AC = 17 W
A ... Q	=	standard model according to valid data sheet *(standard)*
Z ... R	=	special model after consultation
5	=	nominal size 5
(blank)	=	NBR (nitril-butadien-rubber / BUNA) seals *(standard)*
V	=	FKM (fluorocarbon rubber / VITON) seals *(special seals - please consult BUCHER)*
1 ... 9	=	technical design no. (omit when ordering)
...	=	voltage e.g. 24 (24 V)
D	=	current DC
A	=	current AC
(blank)	=	DIN EN 175301-803 connection, 3-pole 2 P+E with mating plug (IP 65) *(standard)*
M100	=	DIN EN 175301-803 connection, 3-pole 2 P+E
C	=	Kostal plug connection (IP 65)
JT	=	Junior Timer radial plug connection (with protection diode, IP 65)
IT	=	Junior Timer axial plug connection (with protection diode, IP 65)
D	=	Deutsch plug connection DT04-2P (IP 67/69K)
DT	=	Deutsch plug connection DT04-2P (with protection diode, IP 67/69K)
S	=	AMP Superseal 1.5 (IP 67) / Metri-Pack 150 (IP 65) plug connection
F	=	flying leads (500 mm)

mating plug not supplied

Related data sheets

Reference	Description
400-P-040011	Forming tools
400-P-040171	Cavity AL
400-P-720101	Threaded port body GALA
400-P-120110	Solenoid coil D36

info.ch@bucherhydraulics.com
www.bucherhydraulics.com

© 2021 by Bucher Hydraulics AG Frutigen, 3714 Frutigen, Switzerland

All rights reserved.
Data is provided for the purpose of product description only, and must not be construed as warranted characteristics in the legal sense. The information does not relieve users from the duty of conducting their own evaluations and tests. Because the products are subject to continual improvement, we reserve the right to amend the product specifications contained in this catalogue.

WWW.SUMY.IR

Directional valve 2-way/2-position

Q_{max} = 40 l/min, p_{max} = 350 bar
Pilot operated, poppet type, switching solenoid with emergency override
Type series: WR22O_Z5...

- Screw-in cartridge valve for cavity ALM
- All external parts with zinc-nickel plating according to DIN EN ISO 19598
- Installation in threaded port body type GALMA
- Seat tight shut-off
- Compact construction
- High flow rates
- Low head loss
- Reliable switching, even after long dwell times
- With manual override
- The slip-on coil can be rotated, and it can be replaced without opening the hydraulic envelope
- High pressure wet-armature solenoids
- Various plug-connector systems and voltages are available

Symbol

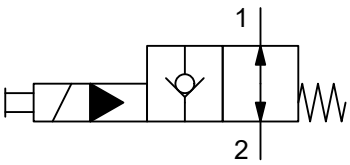

Description

The 2-way/2-position solenoid-operated directional seat valves, series WR22_Z..., are size 5, two stage, pressure balanced screw-in valves with an M20×1.5 mounting thread. The main and pilot stages are both designed on the poppet/seat principle, and the 1 to 2 flow path is therefore virtually leak-free. The straightforward design delivers a good price/performance ratio and outstanding head loss/ flow ratings. All external parts of the screw-in valves are zinc-nickel plated and are thus suitable for use in the harshest operating environments. The slip-on coils can be replaced without opening the hydraulic envelope and can be positioned at any angle through 360°. These valves are primarily used as pilot valves in certain mobile and industrial applications where leak-tight shut-off functions are crucially important. Examples are where loads, tensions, or clamping forces must be held without leakage. For self-assembly, please refer to the section related data sheets.

Technical data

General characteristics	Description, value, unit
Function group	directional valve
Function	2-way/2-position
Design	screw-in cartridge valve
Controls	switching solenoid with emergency override
Characteristic	pilot operated, poppet type
MTTFd value	150 years
Construction size	NG 5
Thread size	M20×1,5
Mounting attitude	unrestricted
Weight	0.40 kg
Cavity acc. factory standard	ALM
Tightening torque steel	50 Nm
Tightening torque aluminium	50 Nm
Tightening torque tolerance	± 10 %
Minimum ambient temperature	- 30 °C
Maximum ambient temperature	+ 50 °C
Surface protection	all external parts with zinc-nickel plating according to DIN EN ISO 19598
Sealing material	see ordering code
Seal kit order number	NBR: DS-245-N / FKM: DS-245-V

Hydraulic characteristics	Description, value, unit
Maximum operating pressure	350 bar
Maximum flow rate	40 l/min
Flow direction	see symbol
Hydraulic fluid	HL and HLP mineral oil according to DIN 51 524; other fluids on request!
Minimum fluid temperature	- 30 °C
Maximum fluid temperature	+ 80 °C
Viscosity range	10 ... 500 mm^2/s (cSt)
Recommended viscosity range	15 ... 250 mm^2/s (cSt)
Minimum fluid cleanliness (cleanlineless class according to ISO 4406:1999)	class 20/18/15

NOTE!
The switching safety of the valve is achieved by the volume flow and pressure drop (Δp).

Electric characteristics	Description, value, unit
Actuator type	solenoid coil
Solenoid coils type	D36
Supply voltage DC	12/24 V DC
Supply voltage AC	115/230 (50 ... 60 Hz) V AC
Supply voltage tolerance	± 10 %
Nominal power consumption	Version "E": V DC = 17 W / V AC = 17 W Version "N": V DC = 27 W / V AC = 25 W
Switching time	Version "E": 35...105 ms (energized) / 20...70 ms (de-energized) Version "N": 25...135 ms (energized) / 20...40 ms (de-energized)
Relative duty cycle	100 %
Electrical connection coil	several connection types available, see ordering code
Protection class solenoid coil to ISO 20 653 / EN 60 529	several classes of protection available, see ordering code (with appropriate mating connector and proper fitting and sealing)

NOTE!
The switching time can be strongly dependent on flow rate, pressure, oil viscosity and the dwell time under pressure. In practice, the switching time may therefore deviate from the specified value range.

Performance graphs

measured with oil viscosity 33.0 mm²/s (cSt), coil at steady-state temperature and 10 % undervoltage

p = f (Q) Performance limit

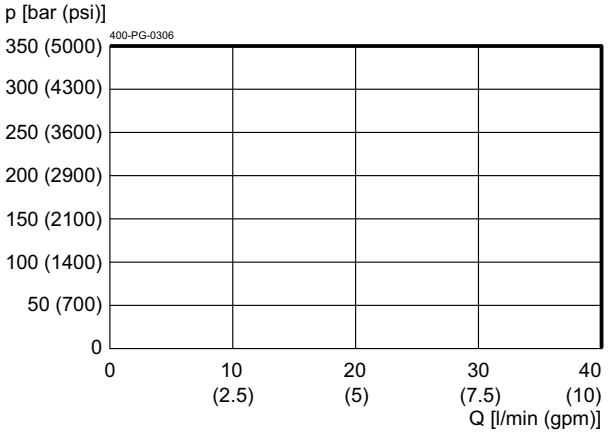

Δp = f (Q) Pressure drop-flow rate characteristic

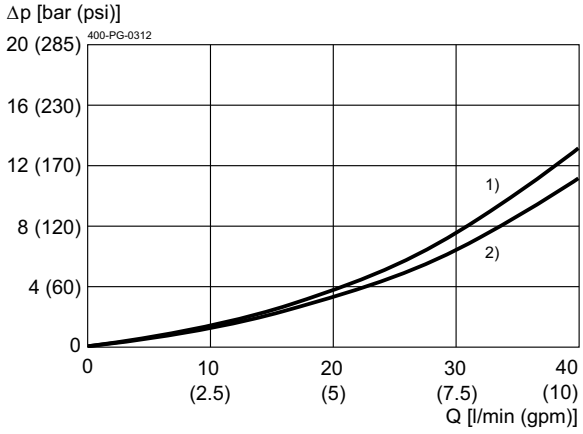

Version "E" - 17 W / Version "N" - 27/25 W
1) 2 → 1, solenoid de-energized
2) 1 → 2, solenoid de-energized

Installation

Beispiel für die Masseinheit:
Example for the dimensional units:

0.79 = 0.79 mm millimeter
(.031) = 0.031" inch

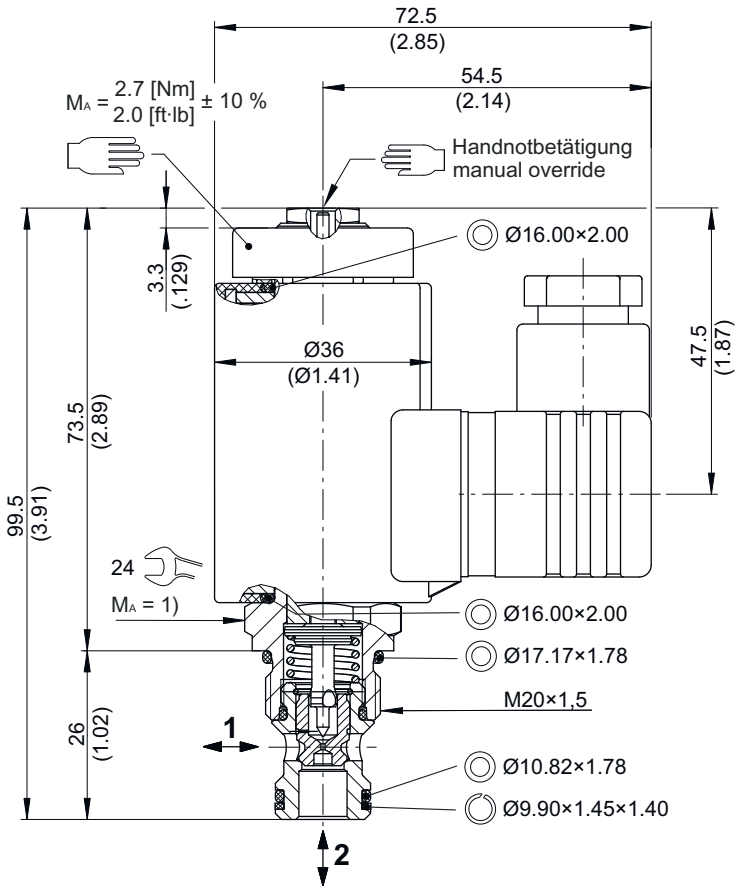

NOTE!
1) When fitting the screw-in cartridge valve, use the specified tightening torque. The value can be found in the chapter "Technical data".

ATTENTION!
Only qualified personnel with mechanical skills may carry out any maintenance work. Generally, the only work that should ever be undertaken is to check, and possibly replace, the seals. When changing seals, oil or grease the new seals thoroughly before fitting them.

NOTE!
The seals are not available individually. The seal kit order number can be found in the chapter "Technical data".

Ordering code

Ex. W R 22O E Z 5 _ - 5 24 D _

W	=	directional valve
R	=	check valve function, pilot operated
22O	=	2-way/2-position, normally open
E	=	electrically operated, V DC = 17 W / V AC = 17 W *(standard)*
N	=	electrically operated, V DC = 27 W / V AC = 25 W
Z	=	thread size M20×1,5 for cavity ALM
5	=	nominal size 5
(blank)	=	NBR (nitril-butadien-rubber / BUNA) seals *(standard)*
V	=	FKM (fluorocarbon rubber / VITON) seals *(special seals - please consult BUCHER)*
1 ... 9	=	technical design no. (omit when ordering)
...	=	voltage e.g. 24 (24 V)
D	=	current DC
A	=	current AC
(blank)	=	DIN EN 175301-803 connection, 3-pole 2 P+E with mating plug (IP 65) *(standard)*
M100	=	DIN EN 175301-803 connection, 3-pole 2 P+E
C	=	Kostal plug connection (IP 65)
JT	=	Junior Timer radial plug connection (with protection diode, IP 65)
IT	=	Junior Timer axial plug connection (with protection diode, IP 65)
D	=	Deutsch plug connection 45° DT04-2P (IP 67/69K)
DT	=	Deutsch plug connection 45° DT04-2P (with protection diode, IP 67/69K)
S	=	AMP Superseal 1.5 (IP 67) / Metri-Pack 150 (IP 65) plug connection
F	=	flying leads (500 mm)

mating plug not supplied

Related data sheets

Reference	Description
400-P-040011	form tools
400-P-040201	cavity ALM
400-P-720105	threaded port body GALMA
400-P-120110	solenoid coil D36
400-P-010101	MTTFd Values for Hydraulic Valves

info.ch@bucherhydraulics.com **www.bucherhydraulics.com**

© 2026 by Bucher Hydraulics AG Frutigen, 3714 Frutigen, Switzerland

All rights reserved.
Data is provided for the purpose of product description only, and must not be construed as warranted characteristics in the legal sense. The information does not relieve users from the duty of conducting their own evaluations and tests. Because the products are subject to continual improvement, we reserve the right to amend the product specifications contained in this catalogue.

BUCHER
hydraulics
WWW.SUMY.IR

Directional valve 2-way/2-position

Q_{max} = 80 l/min, p_{max} = 350 bar
pilot operated, poppet type, switching solenoid
Type series: WRVP22O-8X...

- Screw-in cartridge valve
- For cavity AX/C1020
- All external parts with zinc-nickel plating according to DIN EN ISO 19598
- Installation in threaded port body type GAX-12
- Fits common cavity according to ISO and NFPA
- Reliable switching, even after long dwell times
- Low head loss
- Optional with manual override
- The slip-on coil can be rotated, and it can be replaced without opening the hydraulic envelope
- High pressure wet-armature solenoids
- Various plug-connector systems and voltages are available

Description

These 2-way/2-position solenoid operated directional seat valves, series WRVP22O-8X..., are size 8 / SAE 10, two stage, pressure balanced screw-in valves with a 7/8-14 UNF mounting thread. They are designed on the poppet/seat principle, and the 2 to 1 flow path is therefore virtually leak-free. The straightforward design delivers a good price/performance ratio and outstanding headloss/flow ratings. All external parts of the valves are zinc-nickel plated and are thus suitable for use in the harshest operating environments. The slip-on coils can be replaced without opening the hydraulic envelope and can be positioned at any angle through 360°. These valves are used in mobile and industrial applications where leak-tight shutoff functions are crucially important. Examples are where loads, tensions, or clamping forces must be held without leakage. For self-assembly, please refer to the section related data sheets.

Symbol

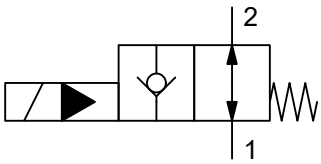

Technical data

General characteristics	Description, value, unit
Function group	Directional valve
Function	2-way/2-position
Design	Screw-in cartridge valve
Controls	switching solenoid
Characteristic	pilot operated, poppet type
MTTFd value	150 years
Construction size	NG 8 / SAE 10
Thread size	7/8-14 UNF-2A
Mounting attitude	unrestricted
Weight	0.58 kg
Cavity acc. ISO	fits into ISO 17209: 7/8-01-0-13
Cavity acc. NFPA	fits into NFPA/T3.5.50: 0.875-01-0-09
Cavity acc. factory standard	For cavity AX/C1020
Tightening torque steel	80 Nm
Tightening torque aluminium	80 Nm
Tightening torque tolerance	± 10 %
Minimum ambient temperature	- 30 °C
Maximum ambient temperature	+ 50 °C
Surface protection	All external parts with zinc-nickel plating according to DIN EN ISO 19598
Sealing material	see ordering code
Seal kit order number	NBR: DS-479-N / FKM: DS-479-V

Hydraulic characteristics	Description, value, unit
Maximum operating pressure	350 bar
Maximum flow rate	80 l/min
Flow direction	see symbol
Hydraulic fluid	HL and HLP mineral oil according to DIN 51 524; other fluids on request!
Minimum fluid temperature	- 30 °C
Maximum fluid temperature	+ 80 °C
Viscosity range	10 ... 500 mm^2/s (cSt)
Recommended viscosity range	15 ... 250 mm^2/s (cSt)
Minimum fluid cleanliness (cleanlineless class according to ISO 4406:1999)	class 20/18/15

NOTE!
The switching safety of the valve is achieved by the volume flow and pressure drop (Δp).

Electric characteristics	Description, value, unit
Actuator type	solenoid coil
Solenoid coils type	36X48/16.1
Supply voltage DC	12/24 V DC
Supply voltage tolerance	± 10 %

WWW.SUMY.IR

Electric characteristics	Description, value, unit
Nominal power consumption	19 W
Switching time	120...280 ms (energized) 20...110 ms (de-energized)
Relative duty cycle	100 %
Electrical connection coil	several connection types available, see ordering code
Protection class solenoid coil to ISO 20 653 / EN 60 529	IP 65 / IP 67 / IP 69K, see “Ordering code” (with appropriate mating connector and proper fitting and sealing)

NOTE!
The switching time can be strongly dependent on flow rate, pressure, oil viscosity and the dwell time under pressure. In practice, the switching time may therefore deviate from the specified value range.

Performance graphs

measured with oil viscosity 33.0 mm²/s (cSt), coil at steady-state temperature and 10 % undervoltage

Δp = f (Q) Pressure drop-flow rate characteristic

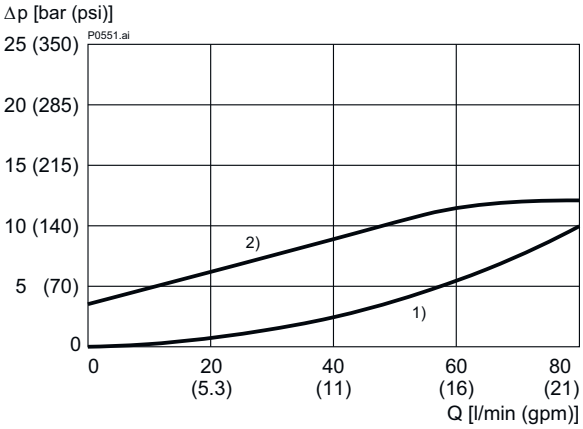

1) 1 → 2, solenoid de-energizing
2 → 1, solenoid de-energizing
2) 1 → 2, solenoid energizing

p = f (Q) Performance limit

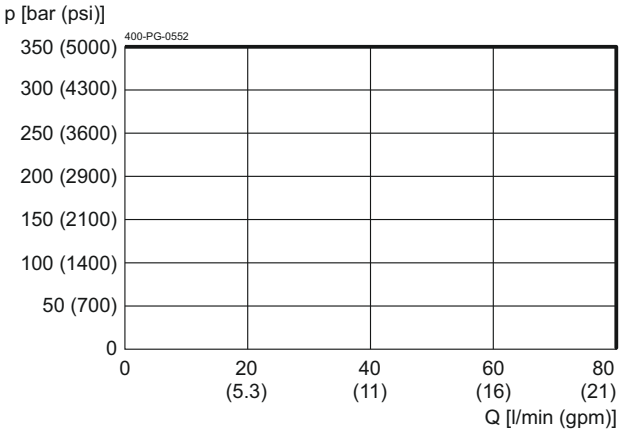

WWW.SUMY.IR

Dimensions and sectional view

Beispiel für die Masseinheit:
Exampel for the dimensional units:

0.79	= 0.79 mm	millimeter
(.031)	= 0.031"	inch

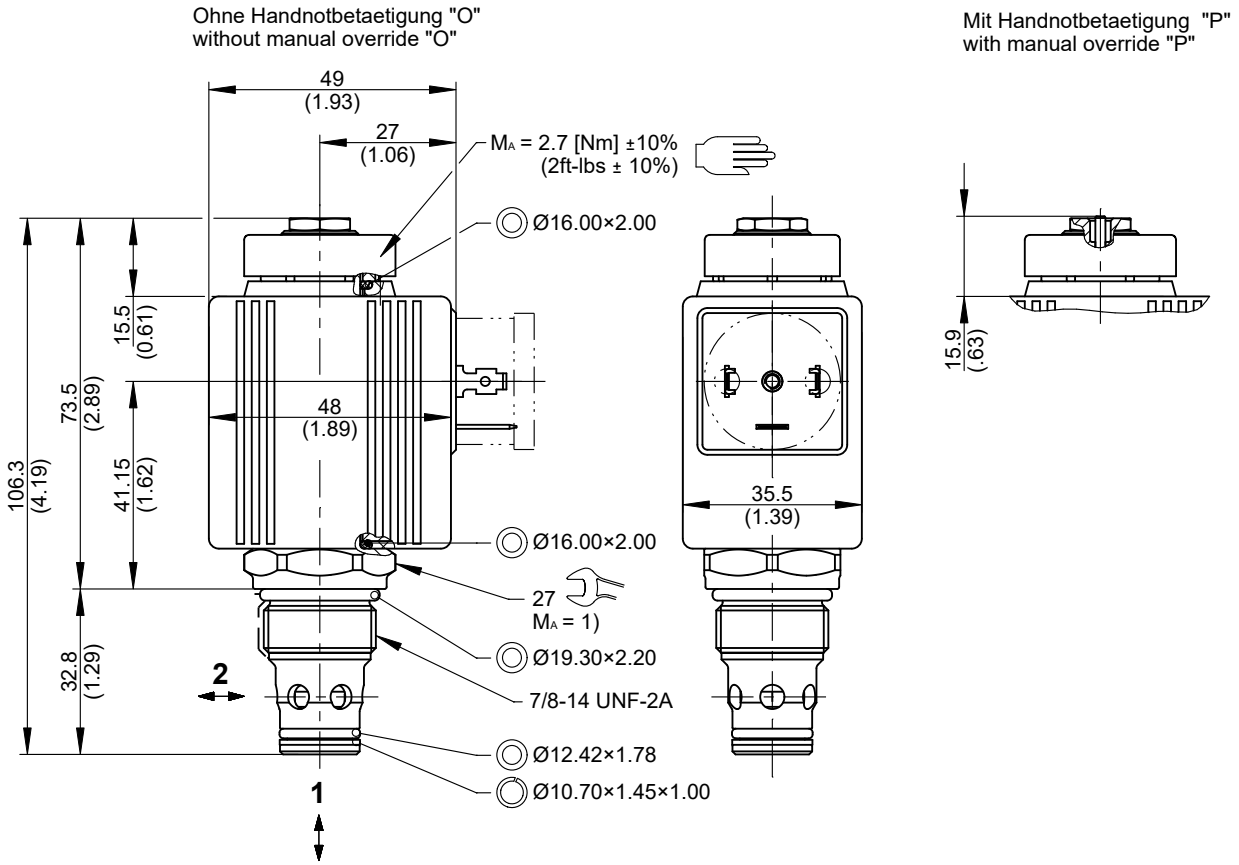

Installation information

NOTE!
1) When fitting the screw-in cartridge valve, use the specified tightening torque. The value can be found in the chapter "Technical data".

ATTENTION!
Only qualified personnel with mechanical skills may carry out any maintenance work. Generally, the only work that should ever be undertaken is to check, and possibly replace, the seals. When changing seals, oil or grease the new seals thoroughly before fitting them.

NOTE!
To achieve the screw-in valve's maximum performance rating, fit the solenoid coil as shown (with the plug pins nearest the knurled nut). The valve must be installed in a steel body.

Ordering code

z.B. W R V P 22O - 8 X - O - N A 1 24 D G _

W	=	Wegventil / Directional valve
R	=	Rückschlag-Funktion (Sitzventil) / Check valve function (seat type)
V	=	Vorgesteuert / Pilot operated
P	=	Elektrisch betätigt, COIL 36X48/16.1 / Electrically operated, COIL 36X48/16.1
22O	=	2-Wege-2-Stellungsfunktion, stromlos offen / 2-way 2-position function, normally open
8	=	Nennweite 8 / Size 8 / SAE 10
X	=	Bohrungsform AX / CX 1020 / Cavity form AX/CX 1020
O	=	Ohne Handbetätigung **(Standard)** / Without manual override **(Standard)**
P	=	Mit Handbetätigung (Pin) / With manual override (Pin)
N	=	NBR (Nitril-Butadien-Kautschuk / Nitrile Butadiene Rubber) **(Standard)** / NBR (Nitrile Butadiene Rubber) **(Standard)**
V	=	FKM (Fluor-Kautschuk / Fluoroelastomer) / FKM (Fluoroelastomer)
		(Spezial-Dichtungen auf Anfrage) / (Special seals on request)
A ... Q	=	Standard-Ausführung gemäss gültigem Datenblatt / Standard-Ausführung gemäss gültigem Datenblatt
Z ... R	=	Spezial-Ausführung (auf Anfrage) / Special-Ausführung (auf Anfrage)
1 ... 9	=	Technischer Stand (bei Bestellung) / Technical design (when ordering)
...	=	Spannungsart (24 V) / Voltage (24 V)
D	=	Strom / Current DC
G	=	DIN EN 175301-803 Anschluss / DIN EN 175301-803 connection — 3-polig + PE (2P+E) **(Standard)** — (IP 65)
GR	=	DIN EN 175301-803 Anschluss / DIN EN 175301-803 connection — 3-polig + PE (2P+E), mit Schutzdiode / with protection diode — (IP 65)
J	=	Junior-Timer-Stecker-Anschluss / Junior-Timer-plug connection — 2-polig radial — (IP 65)
JR	=	Junior-Timer-Stecker-Anschluss / Junior-Timer-plug connection — 2-polig radial, mit Schutzdiode / with protection diode — (IP 65)
U	=	Deutsch-Stecker-Anschluss DT04-2P / Deutsch-plug connection DT04-2P — 2-polig radial — (IP 67/69K)
UR	=	Deutsch-Stecker-Anschluss DT04-2P / Deutsch-plug connection DT04-2P — 2-polig radial, mit Schutzdiode / with protection diode — (IP 67/69K)
		Weitere Stecker-Anschlüsse / Varianten auf Anfrage. / Other plug connections / variants on request.
(blank)	=	ohne Gegenstecker **(Standard)** / without mating plug **(standard)**
Q	=	mit Gegenstecker (nur bei Steckerausführung "G" und "GR") / with mating plug (only for plug versions "G" and "GR")
		W
		W
		W

ohne mating plug / Gegen-stecker not supplied

HINWEIS / IMPORTANT!
Nicht jede Kombination von Spannungsarten und Stecker-Anschlüssen ist verfügbar / Not every combination of voltage values and plug connections is available.

Related data sheets

Reference	Description
400-P-040011	Form tools
400-P-120212	Solenoid coil 36X48/16.1
400-P-040261	Cavity AX/C1020
400-P-738101	Threaded port body GAX-12-...
400-P-010101	MTTFd Values for Hydraulic Valves

info.ch@bucherhydraulics.com **www.bucherhydraulics.com**

© 2024 by Bucher Hydraulics AG Frutigen, 3714 Frutigen, Switzerland

All rights reserved.
Data is provided for the purpose of product description only, and must not be construed as warranted characteristics in the legal sense. The information does not relieve users from the duty of conducting their own evaluations and tests. Because the products are subject to continual improvement, we reserve the right to amend the product specifications contained in this catalogue.

BUCHER hydraulics

WWW.SUMY.IR

Directional valve 2-way/2-position

Q_{max} = 40 l/min, p_{max} = 350 bar
pilot operated, poppet type, switching solenoid with emergency override
Type series: WR22K_A5-...

- Screw-in cartridge valve
- For cavity AL
- All external parts with zinc-nickel coating according to DIN EN ISO 19598
- Installation in threaded port body type GALA
- The slip-on coil can be rotated, and it can be replaced without opening the hydraulic envelope
- High pressure wet-armature solenoids
- Various plug-connector systems and voltages are available
- Seat tight shut-off
- Compact construction
- Minimal headloss
- Reliable switching, even after long dwell times
- With manual override

Description

The 2-way/2-position solenoid-operated directional seat valves, series WR22K_A..., are size 5, two stage, pressure balanced screw-in valves with a 3/4-16 UNF-2A mounting thread. The main and pilot stages are both designed on the poppet/seat principle, and the 1 to 2 flow path is therefore virtually leak-free. This valve type is constructively designed for minimal head loss, thus the flow direction is possible only in one direction (1 to 2). The straightforward design delivers a good price/performance ratio and outstanding head loss/ flow ratings. All external parts of the screw-in valves are zinc-nickel plated, and are thus suitable for use in the harshest operating environments. The slip-on coils can be replaced without opening the hydraulic envelope and can be positioned at any angle through 360°. These valves are primarily used as pilot valves in certain mobile and industrial applications where leak-tight shut-off functions are crucially important. Examples are where loads, tensions, or clamping forces must be held without leakage. For self-assembly, please refer to the section related data sheets.

Symbol

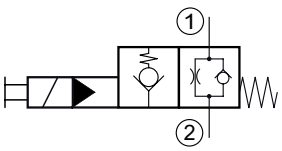

Technical Data

General Characteristics	Description, value, unit
Function group	Directional valve
Function	2-way/2-position
Design	Screw-in cartridge valve
Controls	switching solenoid with emergency override
Characteristic	pilot operated, poppet type
Construction size	nominal size 5
Thread size	3/4-16 UNF-2A
Mounting attitude	unrestricted
Weight	0.40 kg
Cavity acc. factory standard	For cavity AL
Tightening torque steel	50 Nm
Tightening torque aluminium	50 Nm
Tightening torque tolerance	± 10 %
Minimum ambient temperature	- 25 °C
Maximum ambient temperature	+ 50 °C
Surface protection	All external parts with zinc-nickel coating according to DIN EN ISO 19598
Available seal types	several seal types available, see ordering code
Seal kit order number	NBR: DS-246-N / FKM: DS-246-V

Hydraulic Characteristics	Description, value, unit
Maximum operating pressure	350 bar
Maximum flow rate	40 l/min
Flow direction	see symbol
Hydraulic fluid	HL and HLP mineral oil according to DIN 51 524; other fluids on request!
Minimum fluid temperature	- 25 °C
Maximum fluid temperature	+ 80 °C
Viscosity range	10 ... 500 mm^2/s (cSt)
Recommended viscosity range	15 ... 250 mm^2/s (cSt)
Minimum fluid cleanliness (cleanlineless class according to ISO 4406:1999)	class 20/18/15

ATTENTION!
Volume flow direction 2 to 1 not allowed.

NOTE!
The switching safety of the valve is achieved by the volume flow and pressure drop (Δp).

Electric Characteristics	Description, value, unit
Actuator type	solenoid coil
Solenoid coils type	D36
Supply voltage DC	12/24 V DC
Supply voltage AC	115/230 V AC (50 ... 60 Hz)
Supply voltage tolerance	± 10 %
Maximum permissible power consumption	Version "E": V DC = 17 W / V AC = 17 W Version "N": V DC = 27 W / V AC = 25 W
Switching time	Version "E": 35...125 ms (energized) / 15...55 ms (de-energized) Version "N": 30...125 ms (energized) / 20...50 ms (de-energized)
Relative duty cycle	100 %
Electrical connection coil	several connection types available, see ordering code
Protection class solenoid coil to ISO 20 653 / EN 60 529	several classes of protection available, see ordering code (with appropriate mating connector and proper fitting and sealing)

NOTE!
The switching time can be strongly dependent on flow rate, pressure, oil viscosity and the dwell time under pressure. In practice, the switching time may therefore deviate from the specified value range.

Performance graphs

measured with oil viscosity 33.0 mm²/s (cSt), coil at steady-state temperature and 10 % undervoltage

p = f (Q) Performance limit

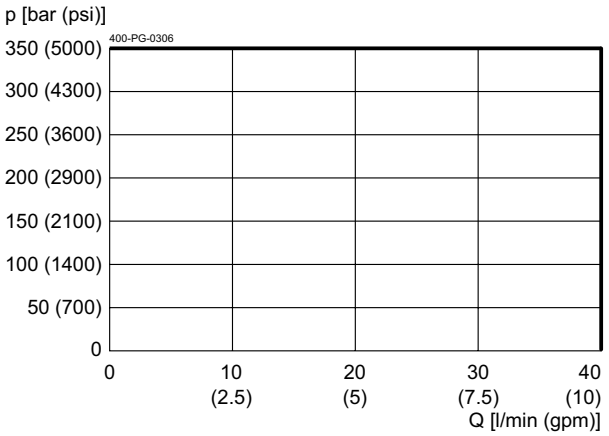

Δp = f (Q) Pressure drop-flow rate characteristic

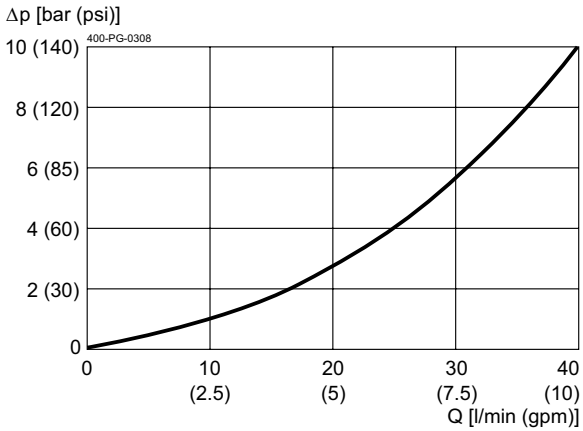

1 → 2, solenoid de-energized

Dimensions and sectional view

Beispiel für die Masseinheit:
Example for the dimensional units:

0.79 = 0.79 mm millimeter
(.031) = 0.031" inch

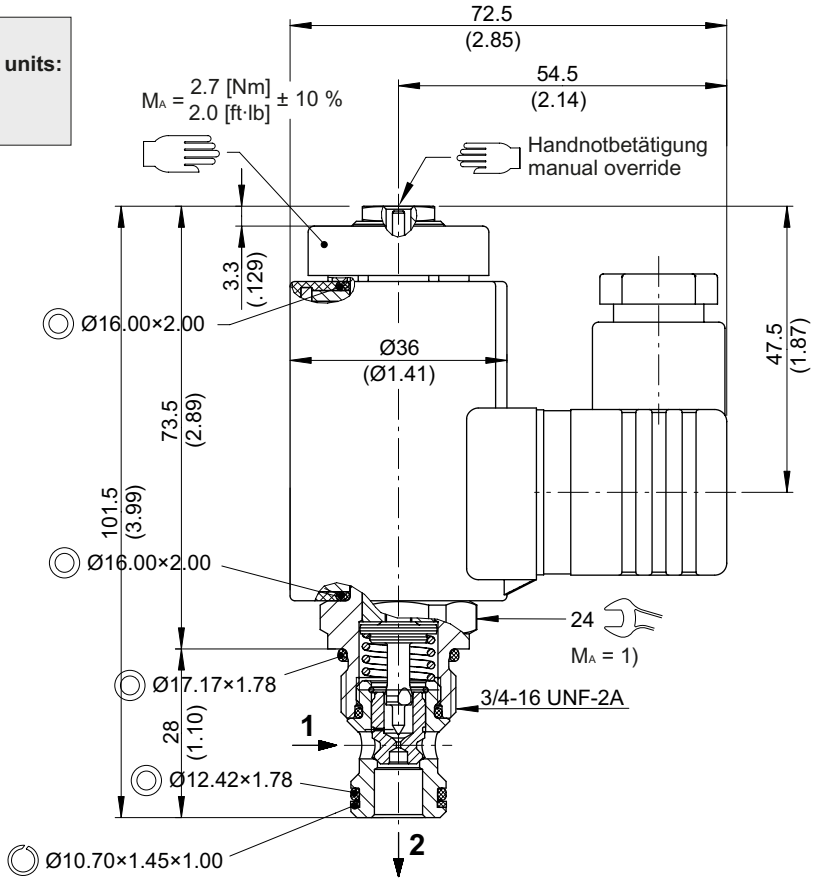

Installation information

NOTE!
1) When fitting the screw-in cartridge valve, use the specified tightening torque. The value can be found in the chapter "technical data".

NOTE!
The seals are not available individually. The seal kit order number can be found in the chapter "Technical data".

ATTENTION!
Only qualified personnel with mechanical skills may carry out any maintenance work. Generally, the only work that should ever be undertaken is to check, and possibly replace, the seals. When changing seals, oil or grease the new seals thoroughly before fitting them.

Ordering code

Ex. W | R | 22K | E | A | 5 | _ - 4 | 24 | D | _

W = directional valve
R = check valve function, pilot operated
22K = 2-way/2-position, normally open
E = electrical operation, V DC = 17 W / V AC = 17 W *(standard)*
N = electrical operation, V DC = 27 W / V AC = 25 W
A = thread size 3/4-16 UNF-2A for cavity AL
5 = nominal size 5
(blank) = NBR (nitril-butadien-rubber / BUNA) seals *(standard)*
V = FKM (fluorocarbon rubber / VITON) seals
(special seals - please consult BUCHER)
1 ... 9 = technical design no. (omit when ordering)
... = voltage e.g. 24 (24 V)
D = current DC
A = current AC
(blank) = DIN EN 175301-803 connection, 3-pole 2 P+E with mating plug (IP 65) *(standard)*
M100 = DIN EN 175301-803 connection, 3-pole 2 P+E
C = Kostal plug connection (IP 65)
JT = Junior Timer radial plug connection (with protection diode, IP 65)
IT = Junior Timer axial plug connection (with protection diode, IP 65)
D = Deutsch plug connection DT04-2P (IP 67/69K)
DT = Deutsch plug connection DT04-2P (with protection diode, IP 67/69K)
S = AMP Superseal 1.5 (IP 67) / Metri-Pack 150 (IP 65) plug connection
F = flying leads (500 mm)

} mating plug not supplied

Related data sheets

Reference	Description
400-P-040011	Forming tools
400-P-040171	Cavity AL
400-P-720101	Threaded port body GALA
400-P-120110	Solenoid coil D36

info.ch@bucherhydraulics.com
www.bucherhydraulics.com

© 2021 by Bucher Hydraulics AG Frutigen, 3714 Frutigen, Switzerland

All rights reserved.
Data is provided for the purpose of product description only, and must not be construed as warranted characteristics in the legal sense. The information does not relieve users from the duty of conducting their own evaluations and tests. Because the products are subject to continual improvement, we reserve the right to amend the product specifications contained in this catalogue.

BUCHER hydraulics

WWW.SUMY.IR

Directional valve 2-way/2-position

Q_{max} = 40 l/min, p_{max} = 350 bar
pilot operated, poppet type, switching solenoid with emergency override
Type series: WR22K_Z5-...

- Screw-in cartridge valve
- For cavity ALM
- All external parts with zinc-nickel coating according to DIN EN ISO 19598
- Installation in threaded port body type GALMA
- The slip-on coil can be rotated, and it can be replaced without opening the hydraulic envelope
- High pressure wet-armature solenoids
- Various plug-connector systems and voltages are available
- Seat tight shut-off
- Compact construction
- Minimal headloss
- Reliable switching, even after long dwell times
- With manual override

Description

The 2-way/2-position solenoid-operated directional seat valves, series WR22K_Z..., are size 5, two stage, pressure balanced screw-in valves with an M20×1,5 mounting thread. The main and pilot stages are both designed on the poppet/seat principle, and the 1 to 2 flow path is therefore virtually leak-free. This valve type is constructively designed for minimal head loss, thus the flow direction is possible only in one direction (1 to 2). The straightforward design delivers a good price/performance ratio and outstanding head loss/flow ratings. All external parts of the screw-in valves are zinc-nickel plated, and are thus suitable for use in the harshest operating environments. The slip-on coils can be replaced without opening the hydraulic envelope and can be positioned at any angle through 360°. These valves are primarily used as pilot valves in certain mobile and industrial applications where leak-tight shut-off functions are crucially important. Examples are where loads, tensions, or clamping forces must be held without leakage. For self-assembly, please refer to the section related data sheets.

Symbol

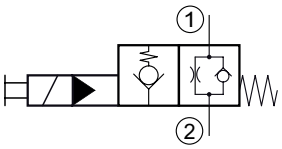

Technical Data

General Characteristics	Description, value, unit
Function group	Directional valve
Function	2-way/2-position
Design	Screw-in cartridge valve
Controls	switching solenoid with emergency override
Characteristic	pilot operated, poppet type
Construction size	nominal size 5
Thread size	M20×1,5
Mounting attitude	unrestricted
Weight	0.40 kg
Cavity acc. factory standard	For cavity ALM
Tightening torque steel	50 Nm
Tightening torque aluminium	50 Nm
Tightening torque tolerance	± 10 %
Minimum ambient temperature	- 25 °C
Maximum ambient temperature	+ 50 °C
Surface protection	All external parts with zinc-nickel coating according to DIN EN ISO 19598
Available seal types	several seal types available, see ordering code
Seal kit order number	NBR: DS-245-N / FKM: DS-245-V

Hydraulic Characteristics	Description, value, unit
Maximum operating pressure	350 bar
Maximum flow rate	40 l/min
Flow direction	see symbol
Hydraulic fluid	HL and HLP mineral oil according to DIN 51 524; other fluids on request!
Minimum fluid temperature	- 25 °C
Maximum fluid temperature	+ 80 °C
Viscosity range	10 ... 500 mm^2/s (cSt)
Recommended viscosity range	15 ... 250 mm^2/s (cSt)
Minimum fluid cleanliness (cleanlineless class according to ISO 4406:1999)	class 20/18/15

ATTENTION!
Volume flow direction 2 to 1 not allowed.

NOTE!
The switching safety of the valve is achieved by the volume flow and pressure drop (Δp).

Electric Characteristics	Description, value, unit
Actuator type	solenoid coil
Solenoid coils type	D36
Supply voltage DC	12/24 V DC
Supply voltage AC	115/230 V AC (50 ... 60 Hz)
Supply voltage tolerance	± 10 %
Maximum permissible power consumption	Version "E": V DC = 17 W / V AC = 17 W Version "N": V DC = 27 W / V AC = 25 W
Switching time	Version "E": 35...125 ms (energized) / 15...55 ms (de-energized) Version "N": 30...125 ms (energized) / 20...50 ms (de-energized)
Relative duty cycle	100 %
Electrical connection coil	several connection types available, see ordering code
Protection class solenoid coil to ISO 20 653 / EN 60 529	several classes of protection available, see ordering code (with appropriate mating connector and proper fitting and sealing)

NOTE!
The switching time can be strongly dependent on flow rate, pressure, oil viscosity and the dwell time under pressure. In practice, the switching time may therefore deviate from the specified value range.

Performance graphs

measured with oil viscosity 33.0 mm²/s (cSt), coil at steady-state temperature and 10 % undervoltage

p = f (Q) Performance limit

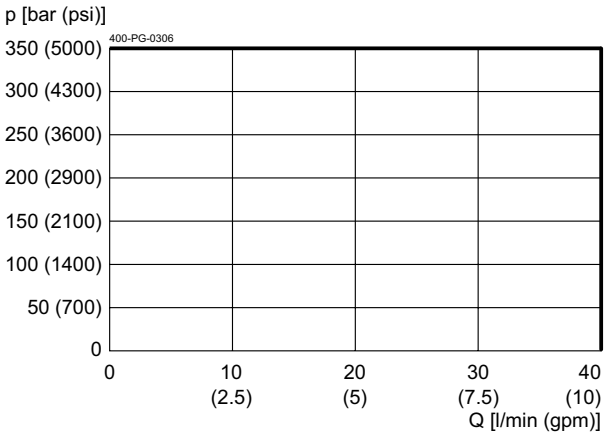

Δp = f (Q) Pressure drop-flow rate characteristic

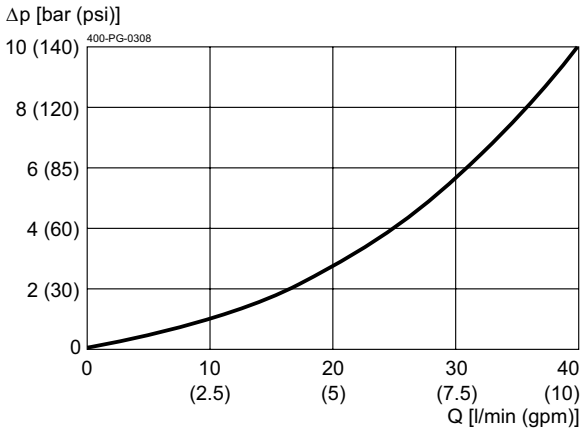

1 → 2, solenoid de-energized

Dimensions and sectional view

Beispiel für die Masseinheit:
Example for the dimensional units:

0.79 = 0.79 mm millimeter
(.031) = 0.031" inch

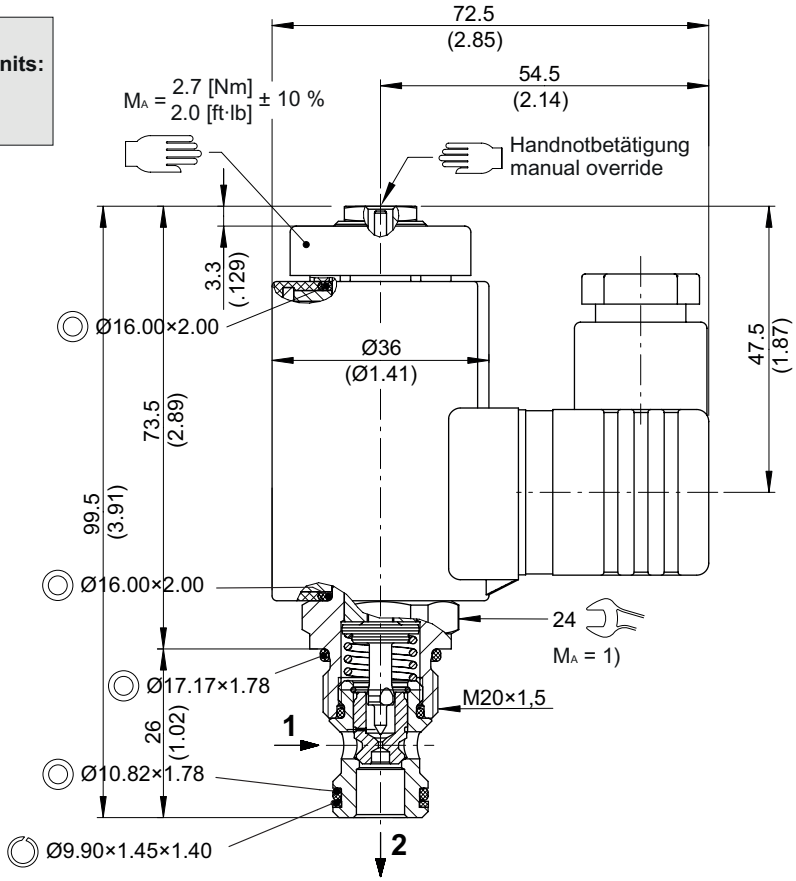

Installation information

NOTE!
1) When fitting the screw-in cartridge valve, use the specified tightening torque. The value can be found in the chapter "technical data".

NOTE!
The seals are not available individually. The seal kit order number can be found in the chapter "Technical data".

ATTENTION!
Only qualified personnel with mechanical skills may carry out any maintenance work. Generally, the only work that should ever be undertaken is to check, and possibly replace, the seals. When changing seals, oil or grease the new seals thoroughly before fitting them.

Ordering code

Ex. W | R | 22K | E | Z | 5 | _ - 4 | 24 | D | _

W = directional valve
R = check valve function, pilot operated
22K = 2-way/2-position, normally open
E = electrical operation, V DC = 17 W / V AC = 17 W *(standard)*
N = electrical operation, V DC = 27 W / V AC = 25 W
Z = thread size M20×1,5 for cavity ALM
5 = nominal size 5
(blank) = NBR (nitril-butadien-rubber / BUNA) seals *(standard)*
V = FKM (fluorocarbon rubber / VITON) seals
(special seals - please consult BUCHER)
1 ... 9 = technical design no. (omit when ordering)
... = voltage e.g. 24 (24 V)
D = current DC
A = current AC
(blank) = DIN EN 175301-803 connection, 3-pole 2 P+E with mating plug (IP 65) *(standard)*
M100 = DIN EN 175301-803 connection, 3-pole 2 P+E
C = Kostal plug connection (IP 65)
JT = Junior Timer radial plug connection (with protection diode, IP 65)
IT = Junior Timer axial plug connection (with protection diode, IP 65)
D = Deutsch plug connection DT04-2P (IP 67/69K)
DT = Deutsch plug connection DT04-2P (with protection diode, IP 67/69K)
S = AMP Superseal 1.5 (IP 67) / Metri-Pack 150 (IP 65) plug connection
F = flying leads (500 mm)

mating plug not supplied

Related data sheets

Reference	Description
400-P-040011	Forming tools
400-P-040201	Cavity ALM
400-P-720105	Threaded port body GALMA
400-P-120110	Solenoid coil D36

info.ch@bucherhydraulics.com **www.bucherhydraulics.com**

© 2021 by Bucher Hydraulics AG Frutigen, 3714 Frutigen, Switzerland

All rights reserved.
Data is provided for the purpose of product description only, and must not be construed as warranted characteristics in the legal sense. The information does not relieve users from the duty of conducting their own evaluations and tests. Because the products are subject to continual improvement, we reserve the right to amend the product specifications contained in this catalogue.

BUCHER hydraulics
WWW.SUMY.IR

Directional valve 2-way/2-position

Q_{max} = 140 l/min, p_{max} = 350 bar
pilot operated, poppet type, switching solenoid with emergency override
Type series: WR22O_DA-10...

- Screw-in cartridge valve
- For cavity DD
- All external parts with zinc-nickel plating according to DIN EN ISO 19598
- Installation in threaded port body type DD-12
- Seat tight shut-off
- No external pilot drain required
- High flow rates
- Low head loss
- Reliable switching, even after long dwell times
- With manual override
- Also available as stack valve
- The slip-on coil can be rotated, and it can be replaced without opening the hydraulic envelope
- High pressure wet-armature solenoids
- Various plug-connector systems and voltages are available

Phase-Out

Description

The 2-way/2-position solenoid operated spool valves, series WR22_D... are size 10, two stage, screw-in valves with an M24×1.5 mounting thread. The main stage as well as the pilot stage are designed on the proven poppet seat design, which ensures that the cartridges are leak-tight from B to A. The straightforward design delivers an outstanding price/performance ratio and good pressure loss/volume flow ratings. All external parts of the screw-in valves are zinc-nickel plated and are thus suitable for use in the harshest operating environments. The slip-on coils can be replaced without opening the hydraulic envelope and can be positioned at any angle through 360°. These valves are used in mobile and industrial applications where leak-tight shutoff functions are crucially important. Examples are where loads, tensions, or clamping forces must be held without leakage. For self-assembly, please refer to the section related data sheets.

WWW.SUMY.IR

Symbol

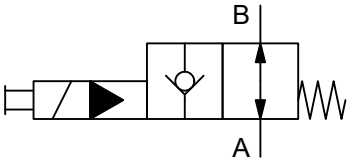

Technical data

General characteristics	Description, value, unit
Product status	Phase-Out
Alternative product	WRV_22O-10F-_A... (400-P-131211)
Function group	Directional valve
Function	2-way/2-position
Design	Screw-in cartridge valve
Controls	switching solenoid with emergency override
Characteristic	pilot operated, poppet type
Construction size	NG 10
Thread size	M24×1,5
Mounting attitude	unrestricted
Weight	0.50 kg
Cavity acc. factory standard	For cavity DD
Tightening torque steel	65 Nm
Tightening torque aluminium	50 Nm
Tightening torque tolerance	± 10 %
Minimum ambient temperature	- 30 °C
Maximum ambient temperature	+ 50 °C
Surface protection	All external parts with zinc-nickel plating according to DIN EN ISO 19598
Sealing material	see ordering code
Seal kit order number	NBR: DS-276-N / FKM: DS-276-V

Hydraulic characteristics	Description, value, unit
Maximum operating pressure	350 bar
Maximum flow rate	140 l/min
Flow direction	see symbol
Hydraulic fluid	HL and HLP mineral oil according to DIN 51 524; other fluids on request!
Minimum fluid temperature	- 30 °C
Maximum fluid temperature	+ 80 °C
Viscosity range	10 ... 500 mm^2/s (cSt)
Recommended viscosity range	15 ... 250 mm^2/s (cSt)
Minimum fluid cleanliness (cleanlineless class according to ISO 4406:1999)	class 20/18/15

NOTE!
The switching safety of the valve is achieved by the volume flow and pressure drop (Δp).

Phase-Out

WWW.SUMY.IR

Electric characteristics	Description, value, unit
Actuator type	solenoid coil
Solenoid coils type	D36
Supply voltage DC	12/24 V DC
Supply voltage AC	115/230 (50 ... 60 Hz) V AC
Supply voltage tolerance	± 10 %
Nominal power consumption	Version "E": V DC = 17 W / V AC = 17 W Version "N": V DC = 27 W / V AC = 25 W
Switching time	Version "E": 50...150 ms (energized) / 15...40 ms (de-energized) Version "N": 40...195 ms (energized) / 20...40 ms (de-energized)
Relative duty cycle	100 %
Electrical connection coil	several connection types available, see ordering code
Protection class solenoid coil to ISO 20 653 / EN 60 529	several classes of protection available, see ordering code (with appropriate mating connector and proper fitting and sealing)

NOTE!
The switching time can be strongly dependent on flow rate, pressure, oil viscosity and the dwell time under pressure. In practice, the switching time may therefore deviate from the specified value range.

Performance graphs

measured with oil viscosity 33.0 mm²/s (cSt), coil at steady-state temperature and 10 % undervoltage

p = f (Q) Performance limit

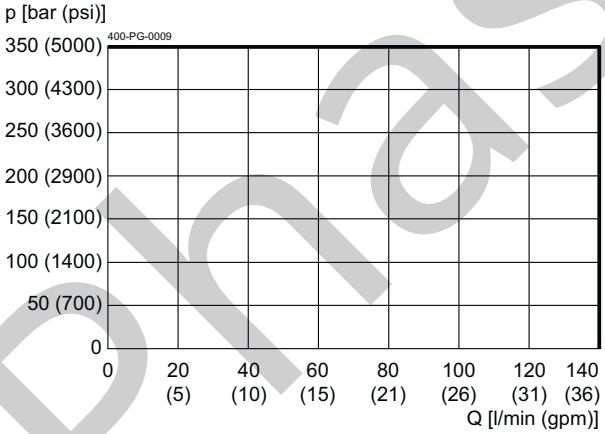

Δp = f (Q) Pressure drop-flow rate characteristic

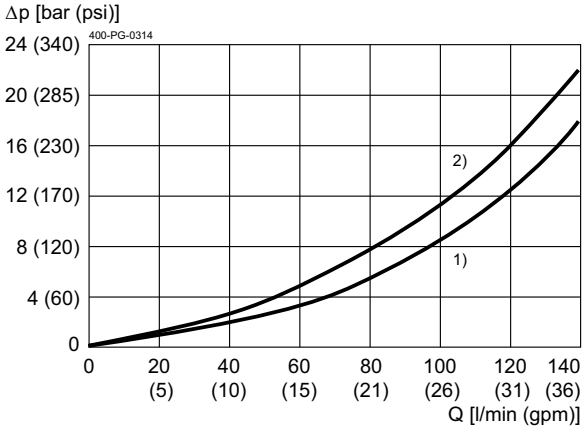

1) A → B, solenoid de-energizing
2) B → A, solenoid de-energizing

Phase-Out

Dimensions and sectional view

Beispiel für die Masseinheit:
Example for the dimensional units:

0.79 = 0.79 mm millimeter
(.031) = 0.031" inch

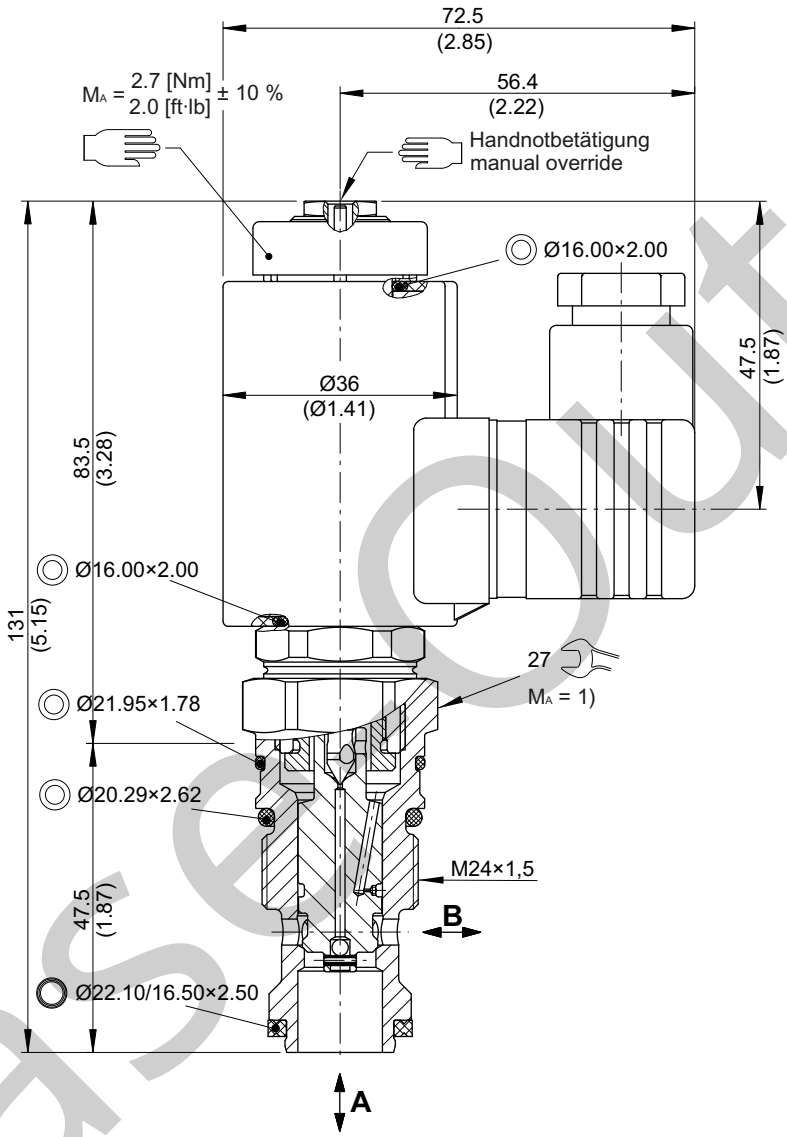

Installation information

NOTE!
1) When fitting the screw-in cartridge valve, use the specified tightening torque. The value can be found in the chapter "Technical data".

ATTENTION!
Only qualified personnel with mechanical skills may carry out any maintenance work. Generally, the only work that should ever be undertaken is to check, and possibly replace, the seals. When changing seals, oil or grease the new seals thoroughly before fitting them.

NOTE!
The seals are not available individually. The seal kit order number can be found in the chapter "Technical data".

Phase out

Ordering code

Ex. W R 22O E D A - 10 _ - 5 24 D - _

W	=	directional valve
R	=	check valve function, pilot operated
22O	=	2-way/2-position, normally open
E	=	electrically operated, V DC = 17 W / V AC = 17 W *(standard)*
N	=	electrically operated, V DC = 27 W / V AC = 25 W
D	=	cavity type DD
A ... Q	=	standard model according to valid data sheet *(standard)*
Z ... R	=	special model after consultation
10	=	nominal size 10
(blank)	=	NBR (nitril-butadien-rubber / BUNA) seals *(standard)*
V	=	FKM (fluorocarbon rubber / VITON) seals *(special seals - please consult BUCHER)*
1 ... 9	=	technical design no. (omit when ordering)
...	=	voltage e.g. 24 (24 V)
D	=	current DC
A	=	current AC
(blank)	=	DIN EN 175301-803 connection, 3-pole 2 P+E with mating plug (IP 65) *(standard)*
M100	=	DIN EN 175301-803 connection, 3-pole 2 P+E
C	=	Kostal plug connection (IP 65)
JT	=	Junior Timer radial plug connection (with protection diode, IP 65)
IT	=	Junior Timer axial plug connection (with protection diode, IP 65)
D	=	Deutsch plug connection DT04-2P (IP 67/69K)
DT	=	Deutsch plug connection DT04-2P (with protection diode, IP 67/69K)
S	=	AMP Superseal 1.5 (IP 67) / Metri-Pack 150 (IP 65) plug connection
F	=	flying leads (500 mm)

mating plug not supplied

Related data sheets

Reference	Description
400-P-040011	Form tools
400-P-060121	Cavity DD
400-P-740111	Threaded port body DD-12
400-P-120110	Solenoid coil D36

Phase-Out

info.ch@bucherhydraulics.com www.bucherhydraulics.com

© 2025 by Bucher Hydraulics AG Frutigen, 3714 Frutigen, Switzerland

All rights reserved.
Data is provided for the purpose of product description only, and must not be construed as warranted characteristics in the legal sense. The information does not relieve users from the duty of conducting their own evaluations and tests. Because the products are subject to continual improvement, we reserve the right to amend the product specifications contained in this catalogue.

BUCHER hydraulics

WWW.SUMY.IR

Directional valve 2-way/2-position

Q_{max} = 140 l/min, p_{max} = 350 bar
pilot operated, poppet type, switching solenoid
Type series: WRV_22O-10F-_A...

- Screw-in cartridge valve
- For cavity HF/C1220A
- All external parts with zinc-nickel plating according to DIN EN ISO 19598
- Installation in threaded port body type GHF-34
- Reliable switching, even after long dwell times
- Low head loss
- Optional with manual override
- The slip-on coil can be rotated, and it can be replaced without opening the hydraulic envelope
- High pressure wet-armature solenoids
- Various plug-connector systems and voltages are available

Description

The 2-way/2-position solenoid operated directional seat valves, series WRV_22O-10F..., are size 10 / SAE 12, two stage, pressure balanced screw-in valves with a 1 1/16-12 UN mounting thread. They are designed on the poppet/seat principle, and the 2 to 1 flow path is therefore virtually leak-free. "De-energized open" function is available. The switching times can be influenced by using solenoid coils with differing power ratings. The straightforward design delivers a good price/performance ratio and outstanding head-loss/flow ratings. These valves are used in mobile and industrial applications where leak-tight shut-off functions are crucially important. Examples are where loads, tensions, or clamping forces must be held without leakage. All external parts of the screw-in valves are zinc-nickel plated according and are thus suitable for use in the harshest operating environments. The slip-on coils can be replaced without opening the hydraulic envelope and can be positioned at any angle through 360°. For self-assembly, please refer to the section related data sheets.

Symbol

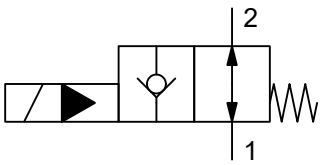

Technical data

General characteristics	Description, value, unit
Function group	Directional valve
Function	2-way/2-position
Design	Screw-in cartridge valve
Controls	switching solenoid
Characteristic	pilot operated, poppet type
MTTFd value	150 years
Construction size	NG 10 / SAE 12
Thread size	1 1/16-12 UN-2A
Mounting attitude	unrestricted
Weight	0.70 kg
Cavity acc. factory standard	For cavity HF/C1220A
Tightening torque steel	150 Nm
Tightening torque aluminium	150 Nm
Tightening torque tolerance	± 10 %
Minimum ambient temperature	- 25 °C
Maximum ambient temperature	+ 50 °C
Surface protection	All external parts with zinc-nickel plating according to DIN EN ISO 19598
Sealing material	see ordering code
Seal kit order number	NBR: DS-498-N / FKM: DS-498-V

Hydraulic characteristics	Description, value, unit
Maximum operating pressure	350 bar
Maximum flow rate	140 l/min
Flow direction	see symbol
Hydraulic fluid	HL and HLP mineral oil according to DIN 51 524; other fluids on request!
Minimum fluid temperature	- 25 °C
Maximum fluid temperature	+ 80 °C
Viscosity range	10 ... 500 mm^2/s (cSt)
Recommended viscosity range	15 ... 250 mm^2/s (cSt)
Minimum fluid cleanliness (cleanlineless class according to ISO 4406:1999)	class 20/18/15

NOTE!
The switching safety of the valve is achieved by the volume flow and pressure drop (Δp).

Electric characteristics	Description, value, unit
Actuator type	solenoid coil
Solenoid coils type	D36
Supply voltage DC	12/24 V DC
Supply voltage AC	115/230 (50 ... 60 Hz) V AC
Supply voltage tolerance	± 10 %

WWW.SUMY.IR

Electric characteristics	Description, value, unit
Nominal power consumption	Version "E": V DC = 17 W / V AC = 17 W Version "N": V DC = 27 W / V AC = 25 W
Switching time	Switching time measured at: UN; Δp = 350 bar; Q = 80 l/min; TAmbient = 20 °C; ϑ = 46 mm2/s), WRVE: 88 ms (energizing) 30 ms (de-energizing), WRVN: 75 ms (energizing) 25 ms (de-energizing)
Relative duty cycle	100 %
Electrical connection coil	several connection types available, see ordering code
Protection class solenoid coil to ISO 20 653 / EN 60 529	several classes of protection available, see ordering code (with appropriate mating connector and proper fitting and sealing)

NOTE!
The switching time can be strongly dependent on flow rate, pressure, oil viscosity and the dwell time under pressure. In practice, the switching time may therefore deviate from the specified value range.

Performance graphs

measured with oil viscosity 33.0 mm²/s (cSt), coil at steady-state temperature and 10 % undervoltage

p = f (Q) Performance limit

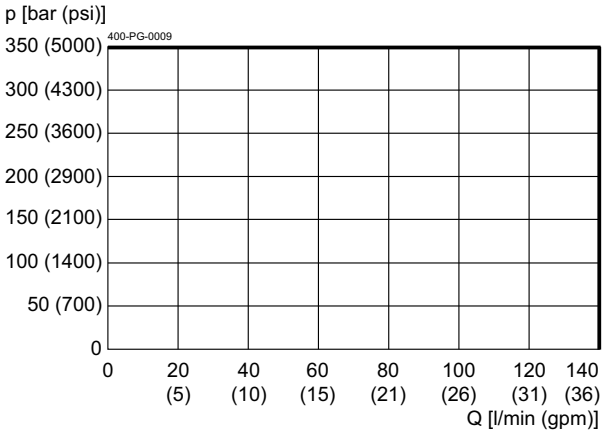

Δp = f (Q) Pressure drop-flow rate characteristic

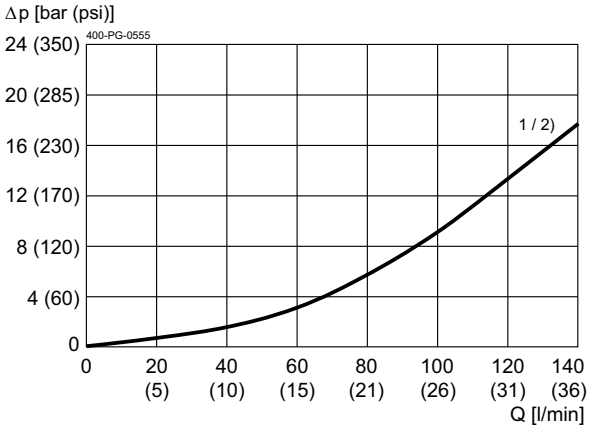

1) 1 → 2, solenoid de-energized
2) 2 → 1, solenoid de-energized

Dimensions and sectional view

Beispiel für die Masseinheit:
Example for the dimensional units:

.031 = 0.031" inch
(0.79) = 0.79 mm millimeter

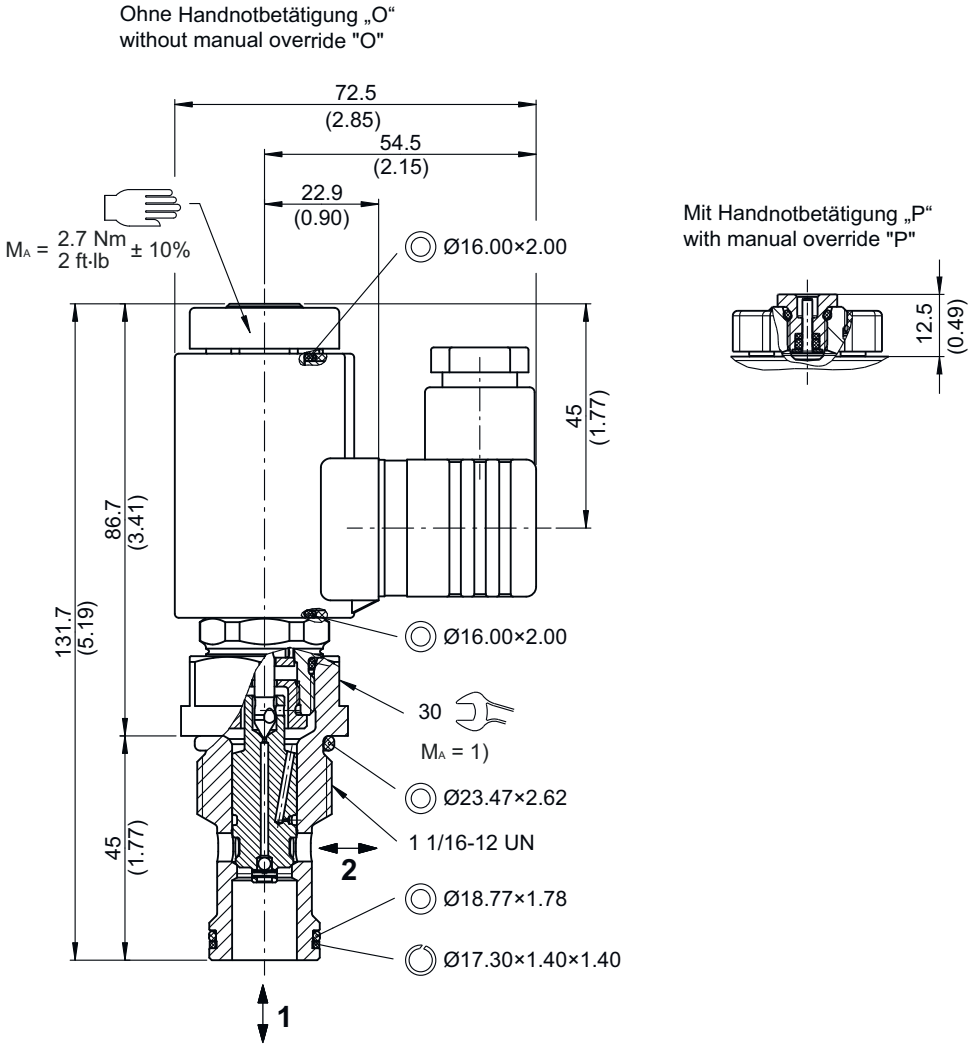

Installation information

IMPORTANT!
When fitting the screw-in valves, use the specified tightening torque. No adjustments are necessary, since the valves are set in the factory.

ATTENTION!
Only qualified personnel with mechanical skills may carry out any maintenance work. Generally, the only work that should ever be undertaken is to check, and possibly replace, the seals. When changing seals, oil or grease the new seals thoroughly before fitting them.

Ordering code

Ex. W R V _ 22O - 10 F - _ - N A 1 24 _ _

W = directional valve
R = check valve function, seated design
V = pilot operated
E = electrically operated, V DC = 17 W / V AC = 17 W
N = electrically operated, V DC = 27 W / V AC = 25 W
22O = 2-way/2-position, normally open
10 = nominal size 10 / SAE 12
F = cavity type HF/C1220A
O = without manual override
P = with manual override
N = NBR (Nitrile) seals **(standard)**
V = FKM (Viton) seals
(special seals - please contact BUCHER)
A ...Q = standard model according to valid data sheet
Z ... R = special model after consultation
1 ... 9 = technical design no. (omit when ordering)
... = voltage e. g. 24 (24 V)
D = current DC
A = current AC
Ohne = DIN EN 175301-803 connection with mating plug **(standard, IP 65)**
M100 = DIN EN 175301-803 connection without mating plug
C = Kostal plug connection (IP 65)
JT = Junior Timer radial plug connection (with protection diode, IP 65)
IT = Junior Timer axial plug connection (with protection diode, IP 65)
D = Deutsch plug connection 45º DT04-2P (IP 67/69K)
DT = Deutsch plug connection 45º DT04-2P (with protection diode, IP 67/69K)
S = AMP Superseal 1.5 (IP 67) / Metri-Pack 150 (IP 65) plug connection
F = flying leads (500 mm)

} mating plug not supplied

Related data sheets

Reference	Description
400-P-040011	Form tools
400-P-120110	Solenoid coil D36
400-P-065111	Cavity HF/C1220A
400-P-740551	Threaded port body GHF-34...
400-P-010101	MTTFd Values for Hydraulic Valves

info.ch@bucherhydraulics.com **www.bucherhydraulics.com**

© 2025 by Bucher Hydraulics AG Frutigen, 3714 Frutigen, Switzerland

All rights reserved.
Data is provided for the purpose of product description only, and must not be construed as warranted characteristics in the legal sense. The information does not relieve users from the duty of conducting their own evaluations and tests. Because the products are subject to continual improvement, we reserve the right to amend the product specifications contained in this catalogue.

BUCHER hydraulics

WWW.SUMY.IR

Directional valve 2-way/2-position

Q_{max} = 180 l/min, p_{max} = 350 bar
switching solenoid, pilot operated, poppet type
Type series: WRVP22O-12A-_B...

- Screw-in cartridge valve
- For cavity LA/C1620
- All external parts with zinc-nickel plating according to DIN EN ISO 19598
- Fits common cavity according to ISO and NFPA
- Reliable switching, even after long dwell times
- Low head loss
- Optional with manual override
- Installation in threaded port body type GLA-11
- The slip-on coil can be rotated, and it can be replaced without opening the hydraulic envelope
- High pressure wet-armature solenoids
- Various plug-connector systems and voltages are available

Description

The 2-way/2-position solenoid-operated directional seat valves, series WRVP22O..., are size NG 12 / SAE 16, two stage, pressure balanced screw-in valves with a 1 5/16-12 UN mounting thread. They are designed on the poppet/seat principle, and the 2 to 1 flow path is therefore virtually leak-free. “De-energized open“ function is available. The straightforward design delivers a good price/performance ratio and outstanding headloss/flow ratings. These valves are used in mobile and industrial applications where leak-tight shut-off functions are crucially important. Examples are where loads, tensions, or clamping forces must be held without leakage. All external parts of the screw-in valve are zinc-nickel plated and are thus suitable for use in the harshest operating environments. The slip-on coils can be replaced without opening the hydraulic envelope and can be positioned at any angle through 360°. For self-assembly, please refer to the section related data sheets.

Symbol

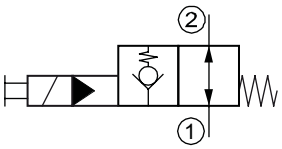

Technical data

General characteristics	Description, value, unit
Function group	Directional valve
Function	2-way/2-position
Design	Screw-in cartridge valve
Controls	switching solenoid
Characteristic	pilot operated, poppet type
MTTFd value	150 years
Construction size	NG 12 / SAE 16
Thread size	1 5/16-12 UN-2A
Mounting attitude	unrestricted
Weight	0.77 kg
Cavity acc. ISO	fits into ISO 17209: 1 5/16-01-0-13
Cavity acc. NFPA	fits into NFPA/T3.5.50: 1.312-01-0-09
Cavity acc. factory standard	For cavity LA/C1620
Tightening torque steel	245 Nm
Tightening torque aluminium	245 Nm
Tightening torque tolerance	± 10 %
Minimum ambient temperature	- 25 °C
Maximum ambient temperature	+ 50 °C
Surface protection	All external parts with zinc-nickel plating according to DIN EN ISO 19598
Sealing material	see ordering code
Seal kit order number	NBR: DS-499-N / FKM: DS-499-V

Hydraulic characteristics	Description, value, unit
Maximum operating pressure	350 bar
Maximum flow rate	180 l/min
Flow direction	see symbol
Hydraulic fluid	HL and HLP mineral oil according to DIN 51 524; other fluids on request!
Minimum fluid temperature	- 25 °C
Maximum fluid temperature	+ 80 °C
Viscosity range	10 ... 500 mm^2/s (cSt)
Recommended viscosity range	15 ... 250 mm^2/s (cSt)
Minimum fluid cleanliness (cleanlineless class according to ISO 4406:1999)	class 20/18/15

Electric characteristics	Description, value, unit
Actuator type	solenoid coil
Solenoid coils type	36X48/16.1
Supply voltage DC	12/24 V DC
Supply voltage tolerance	± 10 %
Maximum permissible power consumption	19 W
Switching time	Switching time measured at: U_N; Δp = 300 bar; Q = 120 l/min; $T_{Ambient}$ = 20 °C; ϑ = 46 mm2/s) 90 ms (energizing) 167 ms (de-energizing)
Relative duty cycle	100 %
Electrical connection coil	several connection types available, see ordering code
Protection class solenoid coil to ISO 20 653 / EN 60 529	several classes of protection available, see ordering code (with appropriate mating connector and proper fitting and sealing)

Performance graphs

measured with oil viscosity 33.0 mm²/s (cSt), coil at steady-state temperature and 10 % undervoltage

Δp = f (Q) Pressure drop-flow rate characteristic

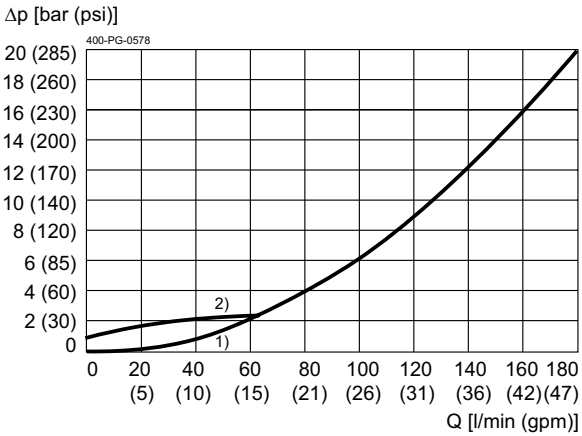

1) 1 → 2, 2 → 1 solenoid de-energized
2) 1 → 2 solenoid energized

p = f (Q) Performance limit

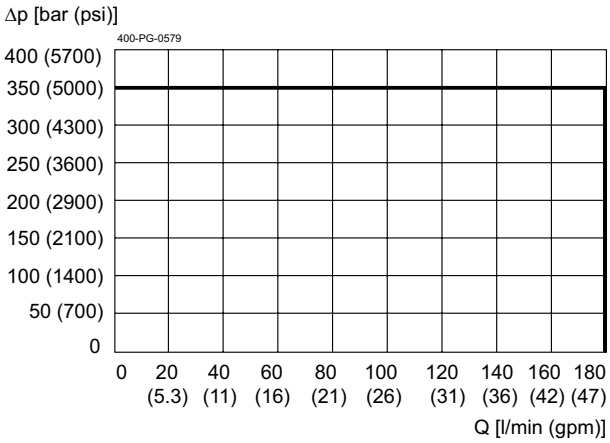

Dimensions and sectional view

Beispiel für die Masseinheit:
Example for the dimensional units:

.031 = 0.031" inch
(0.79) = 0.79 mm millimeter

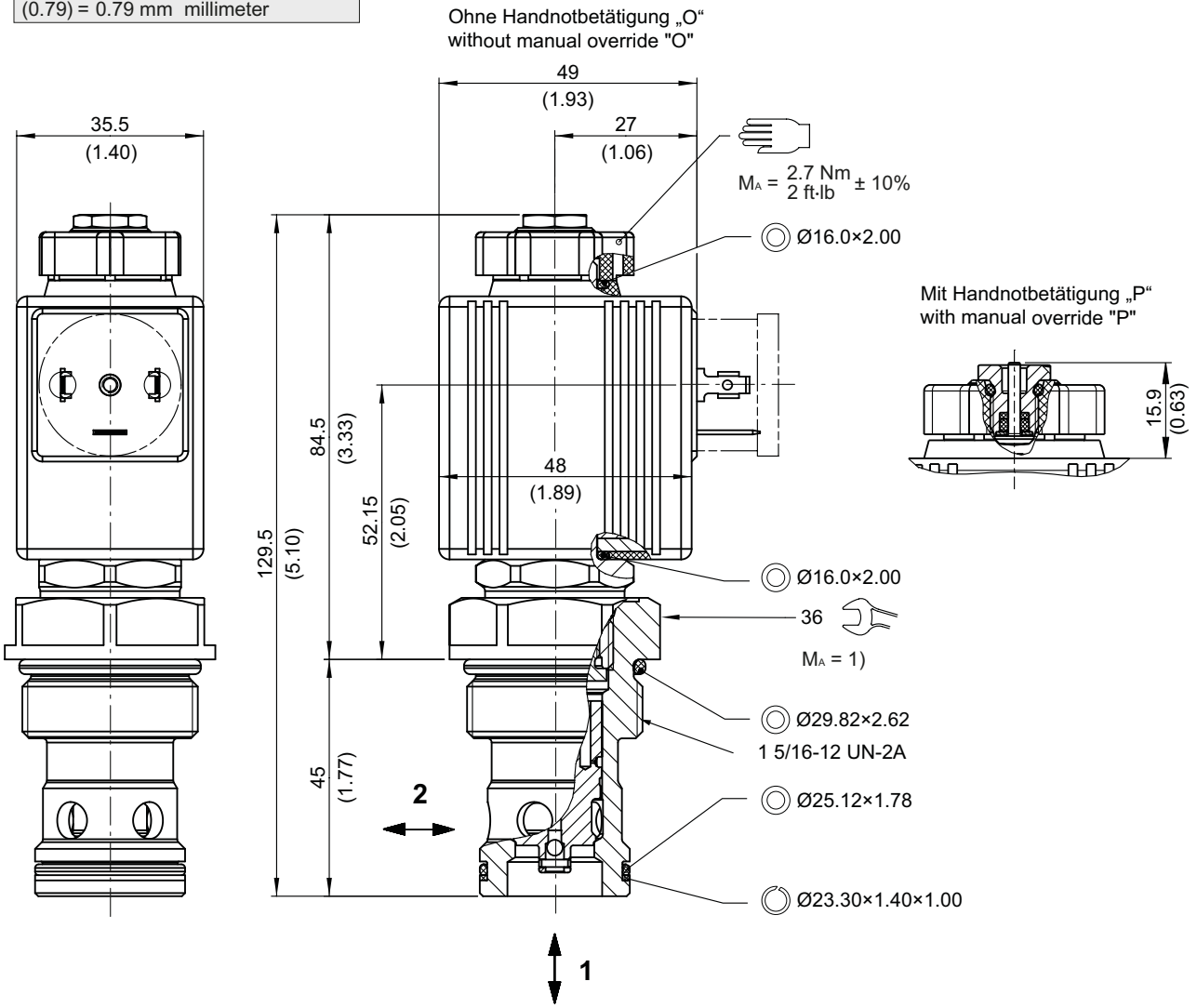

Installation information

NOTE!
1) When fitting the screw-in cartridge valve, use the specified tightening torque. The value can be found in the chapter "Technical data".

ATTENTION!
Only qualified personnel with mechanical skills may carry out any maintenance work. Generally, the only work that should ever be undertaken is to check, and possibly replace, the seals. When changing seals, oil or grease the new seals thoroughly before fitting them.

Ordering code

Ex. W R V P 22O - 12 A - _ - F - N B 1 24 D G _

W	=	directional valve
R	=	check valve function (seat-type)
V	=	pilot operated
P	=	electrically operated, V DC = 19 W
22O	=	2-way/2-position, normally open
12	=	nominal size 12 / SAE 16
A	=	cavity type LA/C1620
O	=	without manual override
P	=	with manual override
F	=	main spool overlap (fine control)
N	=	NBR (nitril-butadien-rubber / BUNA) seals **(standard)**
V	=	FKM (fluorocarbon rubber / VITON) seals *(special seals - please consult BUCHER)*
A … Q	=	standard model according to valid data sheet
Z … R	=	special model after consultation
1 … 9	=	technical design no. (omit when ordering)
…	=	voltage e.g. 24 (24 V)
D	=	current DC
G	=	standard plug connection to DIN EN (3-pole, 2 P+E, IP 65)
J	=	Junior Timer radial plug connection (IP 65)
JR	=	Junior Timer radial plug connection (with protection diode, IP 65)
U	=	Deutsch plug connection radial DT04-2P (IP 67/69K)
UR	=	Deutsch plug connection radial DT04-2P (with protection diode, IP 67/69K)
(blank)	=	without mating plug
Q	=	with mating plug (only by connection type "G" possible)

Related data sheets

Reference	Description
400-P-040011	Form tools
400-P-120212	Solenoid coil 36X48/16.1
400-P-067101	Cavity LA/C1620
400-P-742101	Threaded port body GLA-11...
400-P-010101	MTTFD Values for Hydraulic Valves

info.ch@bucherhydraulics.com **www.bucherhydraulics.com**

© 2023 by Bucher Hydraulics AG Frutigen, 3714 Frutigen, Switzerland

All rights reserved.
Data is provided for the purpose of product description only, and must not be construed as warranted characteristics in the legal sense. The information does not relieve users from the duty of conducting their own evaluations and tests. Because the products are subject to continual improvement, we reserve the right to amend the product specifications contained in this catalogue.

BUCHER hydraulics
WWW.SUMY.IR

Directional valve 2-way/2-position

Q_{max} = 350 l/min, p_{max} = 420 bar
Pilot operated, poppet type, switching solenoid
Type series: WR22O_BA-16...

- Screw-in cartridge valve for cavity EB
- All external parts with zinc-nickel plating according to DIN EN ISO 19598
- Installation in threaded port body type GEBAA
- Seat tight shut-off
- No external pilot drain required
- High flow rates
- Also available as stack valve
- The slip-on coil can be rotated, and it can be replaced without opening the hydraulic envelope
- High pressure wet-armature solenoids
- Various plug-connector systems and voltages are available
- "Low watt" version

Symbol

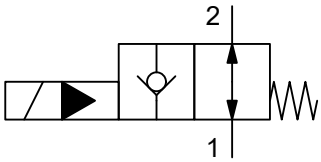

Description

The 2-way/2-position solenoid operated seat valves, series WR22_B... are size 16, two stage, high-performance screw-in valves with an M42×2 mounting thread. The main stage as well as the pilot stage are designed on the proven poppet seat design, which ensures that the cartridges are leak-tight from 2 to 1. The straightforward design delivers an outstanding price/performance ratio and good pressure loss/volume flow ratings. All external parts of the screw-in valves are zinc-nickel plated and are thus suitable for use in the harshest operating environments. The slip-on coils can be replaced without opening the hydraulic envelope and can be positioned at any angle through 360°. These valves are mainly used in mobile and industrial applications where leak-tight shut-off functions are crucially important. Examples are loads, tensions, or clamping forces that must be held without leakage. For self-assembly, please refer to the section related data sheets.

WWW.SUMY.IR

Technical data

General characteristics	Description, value, unit
Function group	directional valve
Function	2-way/2-position
Design	screw-in cartridge valve
Controls	switching solenoid
Characteristic	pilot operated, poppet type
Construction size	NG 16
Thread size	M42×2
Mounting attitude	unrestricted
Weight	1.20 kg
Cavity acc. ISO	fits into ISO 7789: 42-06-0-07
Cavity acc. factory standard	EB
Tightening torque steel	200 Nm
Tightening torque aluminium	200 Nm
Tightening torque tolerance	± 10 %
Minimum ambient temperature	- 25 °C
Maximum ambient temperature	+ 50 °C
Surface protection	all external parts with zinc-nickel plating according to DIN EN ISO 19598
Sealing material	see ordering code
Seal kit order number	NBR: DS-351-N / FKM: DS-351-V

Hydraulic characteristics	Description, value, unit
Maximum operating pressure	420 bar
Maximum flow rate	350 l/min
Flow direction	see symbol
Hydraulic fluid	HL and HLP mineral oil according to DIN 51 524; other fluids on request!
Minimum fluid temperature	- 25 °C
Maximum fluid temperature	+ 80 °C
Viscosity range	10 ... 500 mm^2/s (cSt)
Recommended viscosity range	15 ... 250 mm^2/s (cSt)
Minimum fluid cleanliness (cleanliness class according to ISO 4406:1999)	class 20/18/15

Electric characteristics	Description, value, unit
Actuator type	solenoid coil
Solenoid coils type	D36
Supply voltage DC	12 V DC 24 V DC
Supply voltage AC	115/230 (50 ... 60 Hz) V AC
Supply voltage tolerance	± 10 %
Nominal power consumption	Version "N": V DC = 27 W / V AC = 25 W Version "L": V DC = 8 W
Relative duty cycle	100 %
Electrical connection coil	several connection types available, see ordering code
Protection class solenoid coil to ISO 20 653 / EN 60 529	several classes of protection available, see ordering code (with appropriate mating connector and proper fitting and sealing)

Performance graphs

measured with oil viscosity 33.0 mm²/s (cSt), coil at steady-state temperature and 10 % undervoltage

p = f (Q) Performance limit

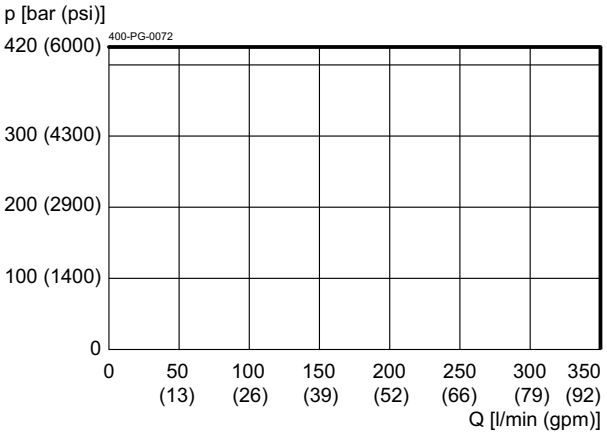

Δp = f (Q) Pressure drop-flow rate characteristic

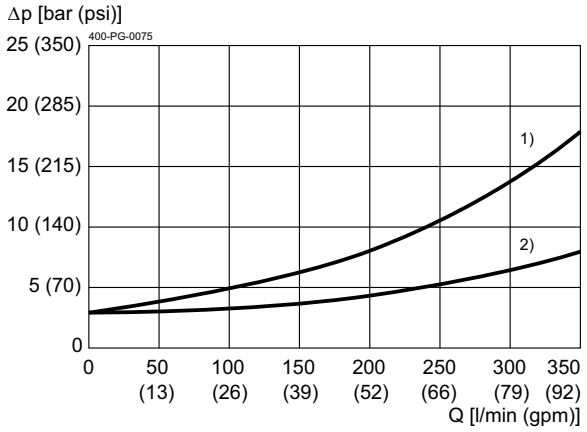

cavity type EB with annular groove
1) 1 → 2
2) 2 → 1

Δp = f (Q) Pressure drop-flow rate characteristic

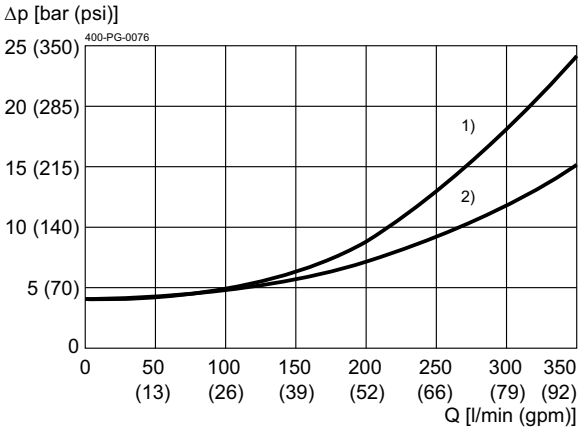

cavity type EB without annular groove
1) 1 → 2
2) 2 → 1

Installation

Beispiel für die Masseinheit:
Example for the dimensional units:

0.79 = 0.79 mm millimeter
(.031) = 0.031'' inch

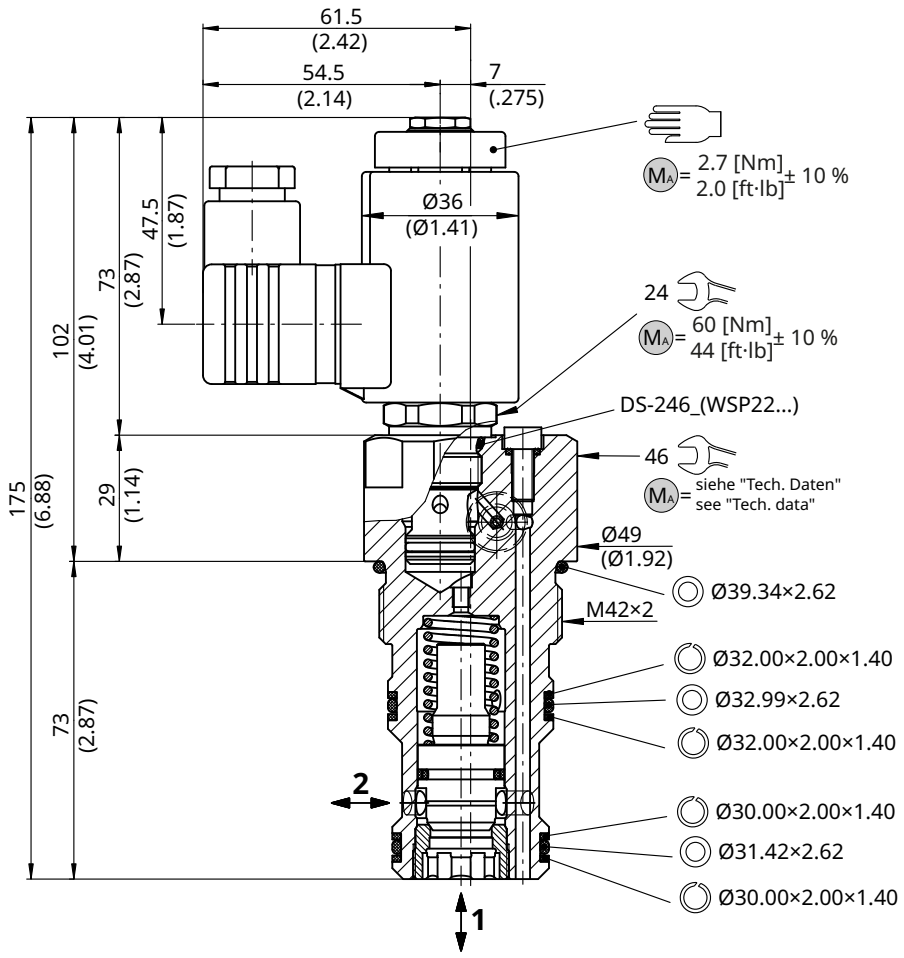

ATTENTION!
Only qualified personnel with mechanical skills may carry out the following work:

- installation and, if necessary, adjustment.
- replacement of slip-on solenoid coil, if present (solenoid coil type; see "Technical Data").
- inspection and, if necessary, replacement of the seals shown in the illustration. New seals must only be installed after being oiled or greased (seal kit; see "Technical Data").

NOTE!
- Observe tightening torques M_A.

Ordering code

Ex. W | R | 22O | N | B | A – 16 | _ – 4 | 24 | D | _

W	=	directional valve
R	=	check valve function, pilot operated
22O	=	2-way/2-position, normally open
N	=	electrically operated, V DC = 27 W / V AC = 25 W *(standard)*
L	=	electrically operated, V DC = 8 W
B	=	cavity type EB
A ... Q	=	standard model according to valid data sheet *(standard)*
Z ... R	=	special model after consultation
16	=	nominal size 16
(blank)	=	NBR (nitril-butadien-rubber / BUNA) seals *(standard)*
V	=	FKM (fluorocarbon rubber / VITON) seals *(special seals - please consult BUCHER)*
1 ... 9	=	technical design no. (omit when ordering)
...	=	voltage e.g. 24 (24 V)
D	=	current DC
A	=	current AC
(blank)	=	DIN EN 175301-803 connection, 3-pole 2 P+E with mating plug (IP 65) *(standard)*
M100	=	DIN EN 175301-803 connection, 3-pole 2 P+E
C	=	Kostal plug connection (IP 65)
JT	=	Junior Timer radial plug connection (with protection diode, IP 65)
IT	=	Junior Timer axial plug connection (with protection diode, IP 65)
D	=	Deutsch plug connection 45° DT04-2P (IP 67/69K)
DT	=	Deutsch plug connection 45° DT04-2P (with protection diode, IP 67/69K)
F	=	flying leads (500 mm)

mating plug not supplied

Related data sheets

Reference	Description
400-P-040011	form tools
400-P-080111	cavity EB
400-P-750115	threaded port body GEBAA
400-P-120110	solenoid coil D36

info.ch@bucherhydraulics.com **www.bucherhydraulics.com**

© 2026 by Bucher Hydraulics AG Frutigen, 3714 Frutigen, Switzerland

All rights reserved.
Data is provided for the purpose of product description only, and must not be construed as warranted characteristics in the legal sense. The information does not relieve users from the duty of conducting their own evaluations and tests. Because the products are subject to continual improvement, we reserve the right to amend the product specifications contained in this catalogue.

BUCHER hydraulics
WWW.SUMY.IR

Directional valve 2-way/2-position

Q_{max} = 140 l/min, p_{max} = 350 bar
pilot operated, poppet type, switching solenoid with emergency override
Type series: WR22O_CA-10...

- Screw-in cartridge valve
- For cavity DC
- All external parts with zinc-nickel plating according to DIN EN ISO 19598
- Installation in threaded port body type DC-12
- Seat tight shut-off
- No external pilot drain required
- High flow rates
- Low head loss
- Reliable switching, even after long dwell times
- With manual override
- Also available as stack valve
- The slip-on coil can be rotated, and it can be replaced without opening the hydraulic envelope
- High pressure wet-armature solenoids
- Various plug-connector systems and voltages are available

Phase-Out

Description

The 2-way/2-position solenoid operated spool valves, series WR22_C... are size 10, two stage, screw-in valves with an M24×1.5 mounting thread. The main stage as well as the pilot stage are designed on the proven poppet seat design, which ensures that the cartridges are leak-tight from B to A. The straightforward design delivers an outstanding price/performance ratio and good pressure loss/volume flow ratings. All external parts of the screw-in valves are zinc-nickel plated and are thus suitable for use in the harshest operating environments. The slip-on coils can be replaced without opening the hydraulic envelope and can be positioned at any angle through 360°. These valves are used in mobile and industrial applications where leak-tight shutoff functions are crucially important. Examples are where loads, tensions, or clamping forces must be held without leakage. For self-assembly, please refer to the section related data sheets.

Symbol

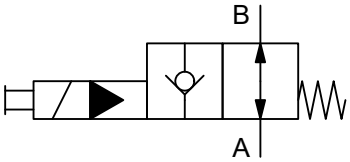

Technical data

General characteristics	Description, value, unit
Product status	Phase-Out
Alternative product	WRV_22O-10F-_A... (400-P-131211)
Function group	Directional valve
Function	2-way/2-position
Design	Screw-in cartridge valve
Controls	switching solenoid with emergency override
Characteristic	pilot operated, poppet type
Construction size	NG 10
Thread size	M24×1,5
Mounting attitude	unrestricted
Weight	0.50 kg
Cavity acc. factory standard	For cavity DC
Tightening torque steel	100 Nm
Tightening torque aluminium	100 Nm
Tightening torque tolerance	± 10 %
Minimum ambient temperature	- 25 °C
Maximum ambient temperature	+ 50 °C
Surface protection	All external parts with zinc-nickel plating according to DIN EN ISO 19598
Sealing material	see ordering code
Seal kit order number	NBR: DS-276-N / FKM: DS-276-V

Hydraulic characteristics	Description, value, unit
Maximum operating pressure	350 bar
Maximum flow rate	140 l/min
Flow direction	see symbol
Hydraulic fluid	HL and HLP mineral oil according to DIN 51 524; other fluids on request!
Minimum fluid temperature	- 25 °C
Maximum fluid temperature	+ 80 °C
Viscosity range	10 ... 500 mm^2/s (cSt)
Recommended viscosity range	15 ... 250 mm^2/s (cSt)
Minimum fluid cleanliness (cleanlineless class according to ISO 4406:1999)	class 20/18/15

NOTE!
The switching safety of the valve is achieved by the volume flow and pressure drop (Δp).

Phase-Out

WWW.SUMY.IR

Electric characteristics	Description, value, unit
Actuator type	solenoid coil
Solenoid coils type	D36
Supply voltage DC	12/24 V DC
Supply voltage AC	115/230 (50 ... 60 Hz) V AC
Supply voltage tolerance	± 10 %
Nominal power consumption	Version "E": V DC = 17 W / V AC = 17 W Version "N": V DC = 27 W / V AC = 25 W
Switching time	Version "E": 50...150 ms (energized) / 15...40 ms (de-energized) Version "N": 40...195 ms (energized) / 20...40 ms (de-energized)
Relative duty cycle	100 %
Electrical connection coil	several connection types available, see ordering code
Protection class solenoid coil to ISO 20 653 / EN 60 529	several classes of protection available, see ordering code (with appropriate mating connector and proper fitting and sealing)

NOTE!
The switching time can be strongly dependent on flow rate, pressure, oil viscosity and the dwell time under pressure. In practice, the switching time may therefore deviate from the specified value range.

Performance graphs

measured with oil viscosity 33.0 mm²/s (cSt), coil at steady-state temperature and 10 % undervoltage

p = f (Q) Performance limit

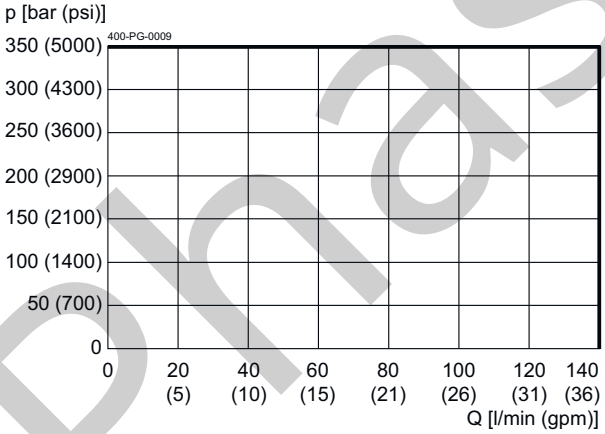

Δp = f (Q) Pressure drop-flow rate characteristic

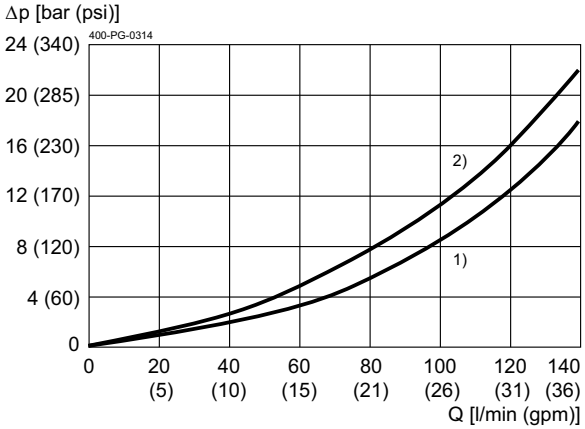

1) A → B, solenoid de-energizing
2) B → A, solenoid de-energizing

Phase-Out

Dimensions and sectional view

Beispiel für die Masseinheit:
Example for the dimensional units:

0.79	= 0.79 mm	millimeter
(.031)	= 0.031"	inch

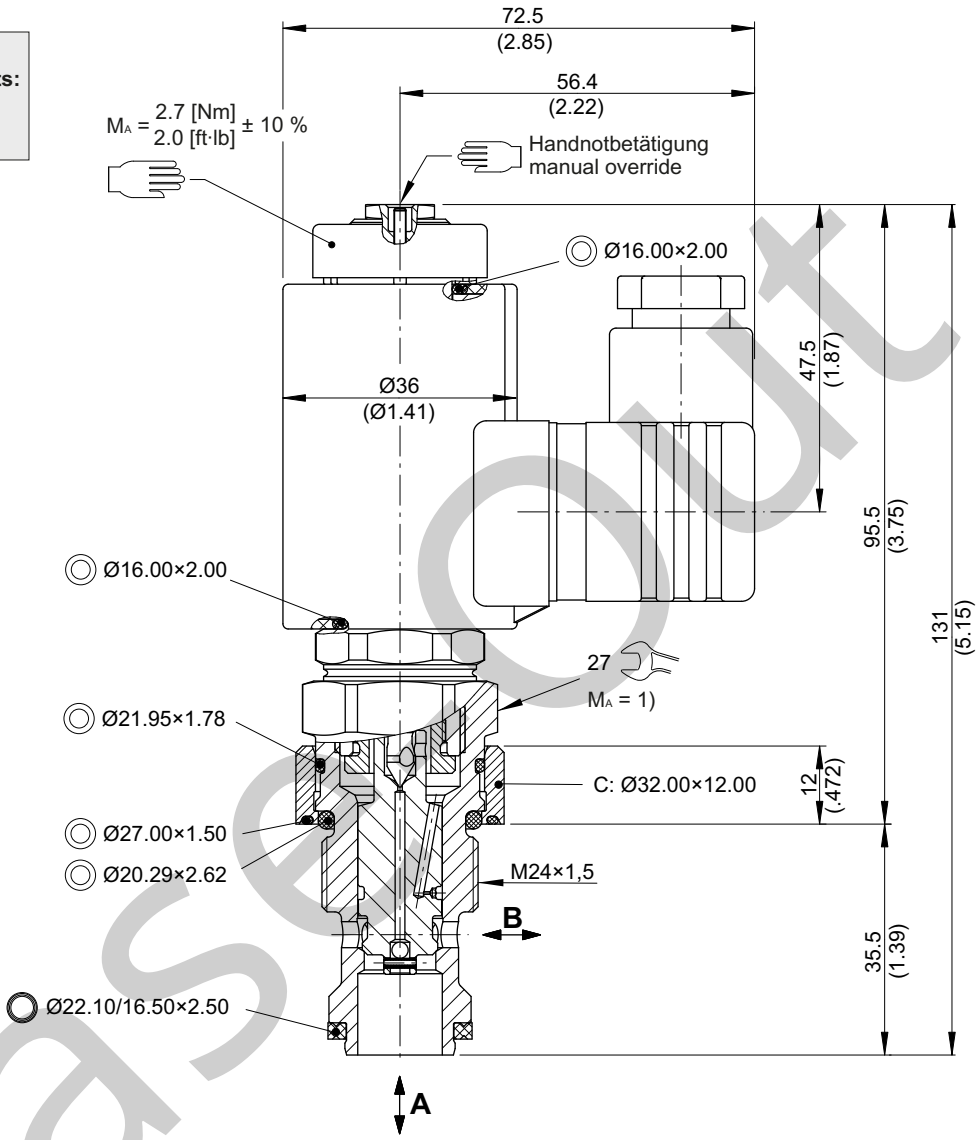

Installation information

NOTE!
1) When fitting the screw-in cartridge valve, use the specified tightening torque. The value can be found in the chapter "Technical data".

ATTENTION!
Only qualified personnel with mechanical skills may carry out any maintenance work. Generally, the only work that should ever be undertaken is to check, and possibly replace, the seals. When changing seals, oil or grease the new seals thoroughly before fitting them.

NOTE!
The seals are not available individually. The seal kit order number can be found in the chapter "Technical data".

Phase out

Ordering code

Ex. W R 22O E C A - 10 _ - 5 24 D - _

W	=	directional valve
R	=	check valve function, pilot operated
22O	=	2-way/2-position, normally open
E	=	electrically operated, V DC = 17 W / V AC = 17 W *(standard)*
N	=	electrically operated, V DC = 27 W / V AC = 25 W
C	=	cavity type DC
A ... Q	=	standard model according to valid data sheet *(standard)*
Z ... R	=	special model after consultation
10	=	nominal size 10
(blank)	=	NBR (nitril-butadien-rubber / BUNA) seals *(standard)*
V	=	FKM (fluorocarbon rubber / VITON) seals *(special seals - please consult BUCHER)*
1 ... 9	=	technical design no. (omit when ordering)
...	=	voltage e.g. 24 (24 V)
D	=	current type DC
A	=	current type AC
(blank)	=	DIN EN 175301-803 connection, 3-pole 2 P+E with mating plug (IP 65) *(standard)*
M100	=	DIN EN 175301-803 connection, 3-pole 2 P+E
C	=	Kostal plug connection (IP 65)
JT	=	Junior Timer radial plug connection (with protection diode, IP 65)
IT	=	Junior Timer axial plug connection (with protection diode, IP 65)
D	=	Deutsch plug connection DT04-2P (IP 67/69K)
DT	=	Deutsch plug connection DT04-2P (with protection diode, IP 67/69K)
S	=	AMP Superseal 1.5 (IP 67) / Metri-Pack 150 (IP 65) plug connection
F	=	flying leads (500 mm)

mating plug not supplied

Related data sheets

Reference	Description
400-P-040011	Form tools
400-P-060111	Cavity DC
400-P-740101	Threaded port body DC-12
400-P-120110	Solenoid coil D36

Phase-Out

info.ch@bucherhydraulics.com www.bucherhydraulics.com

© 2025 by Bucher Hydraulics AG Frutigen, 3714 Frutigen, Switzerland

All rights reserved.
Data is provided for the purpose of product description only, and must not be construed as warranted characteristics in the legal sense. The information does not relieve users from the duty of conducting their own evaluations and tests. Because the products are subject to continual improvement, we reserve the right to amend the product specifications contained in this catalogue.

BUCHER hydraulics
WWW.SUMY.IR

Directional valve 2-way/2-position

Q_{max} = 140 l/min, p_{max} = 350 bar
pilot operated, poppet type, switching solenoid with emergency override
Type series: WRA22O_CA-10...

- Screw-in cartridge valve
- For cavity DC
- All external parts with zinc-nickel plating according to DIN EN ISO 19598
- Installation in threaded port body type DC-12
- Seat tight shut-off
- High flow rates
- With manual override
- Also available as stack valve
- The slip-on coil can be rotated, and it can be replaced without opening the hydraulic envelope
- High pressure wet-armature solenoids
- Various plug-connector systems and voltages are available

Phase-Out

Description

The 2-way/2-position solenoid-operated directional seat valves, series WRA22_C..., are size 10, two stage, screw-in valves with an M24×1.5 mounting thread. They are designed on the poppet/seat principle, and the A to B flow path is therefore virtually leak-free. "De-energized closed" and "de-energized open" functions are available. The switching times can be influenced by using solenoid coils with differing power ratings. The straightforward design delivers a good price/performance ratio and outstanding head-loss/flow ratings. These 2/2 solenoid operated seat valves are used in mobile and industrial applications where leak-tight shut-off functions are crucially important. Examples are where loads, tensions, or clamping forces must be held without leakage. All external parts of the cartridge are zinc-nickel plated and are thus suitable for use in the harshest operating environments. The slip-on coils can be replaced without opening the hydraulic envelope and can be positioned at any angle through 360°. For self-assembly, please refer to the section related data sheets.

Symbol

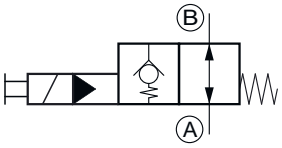

Technical data

General characteristics	Description, value, unit
Product status	Phase-Out
Alternative product	WRA22O_DA-10... (400-P-131123)
Function group	Directional valve
Function	2-way/2-position
Design	Screw-in cartridge valve
Controls	switching solenoid with emergency override
Characteristic	pilot operated, poppet type
Construction size	NG 10
Thread size	M24×1,5
Mounting attitude	unrestricted
Weight	0.50 kg
Cavity acc. factory standard	For cavity DC
Tightening torque steel	100 Nm
Tightening torque aluminium	100 Nm
Tightening torque tolerance	± 10 %
Minimum ambient temperature	- 25 °C
Maximum ambient temperature	+ 50 °C
Surface protection	All external parts with zinc-nickel plating according to DIN EN ISO 19598
Sealing material	see ordering code
Seal kit order number	NBR: DS-276-N / FKM: DS-276-V

Hydraulic characteristics	Description, value, unit
Maximum operating pressure	350 bar
Maximum flow rate	140 l/min
Flow direction	see symbol
Hydraulic fluid	HL and HLP mineral oil according to DIN 51 524; other fluids on request!
Minimum fluid temperature	- 25 °C
Maximum fluid temperature	+ 80 °C
Viscosity range	10 ... 500 mm^2/s (cSt)
Recommended viscosity range	15 ... 250 mm^2/s (cSt)
Minimum fluid cleanliness (cleanlineless class according to ISO 4406:1999)	class 20/18/15

Electric characteristics	Description, value, unit
Actuator type	solenoid coil
Solenoid coils type	D36
Supply voltage DC	12/24 V DC
Supply voltage AC	115/230 (50 ... 60 Hz) V AC
Supply voltage tolerance	± 10 %
Nominal power consumption	Version "E": V DC = 17 W / V AC = 17 W Version "N": V DC = 27 W / V AC = 25 W

Phase-Out

BUCHER hydraulics
WWW.SUMY.IR

Electric characteristics	Description, value, unit
Switching time	Version "E": 66...132 ms (energized) / 16...66 ms (de-energized) Version "N": 54...142 ms (energized) / 18...60 ms (de-energized)
Relative duty cycle	100 %
Electrical connection coil	several connection types available, see ordering code
Protection class solenoid coil to ISO 20 653 / EN 60 529	several classes of protection available, see ordering code (with appropriate mating connector and proper fitting and sealing)

NOTE!
The switching time can be strongly dependent on flow rate, pressure, oil viscosity and the dwell time under pressure. In practice, the switching time may therefore deviate from the specified value range.

Performance graphs

measured with oil viscosity 33.0 mm²/s (cSt), coil at steady-state temperature and 10 % undervoltage

Δp = f (Q) Pressure drop-flow rate characteristic

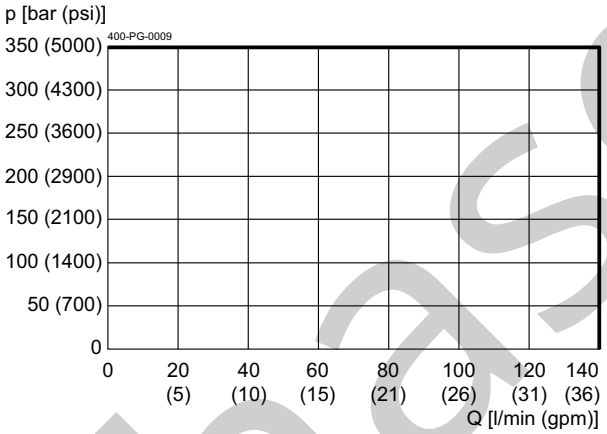

Δp = f (Q) Pressure drop-flow rate characteristic
Version "E" – 17 W

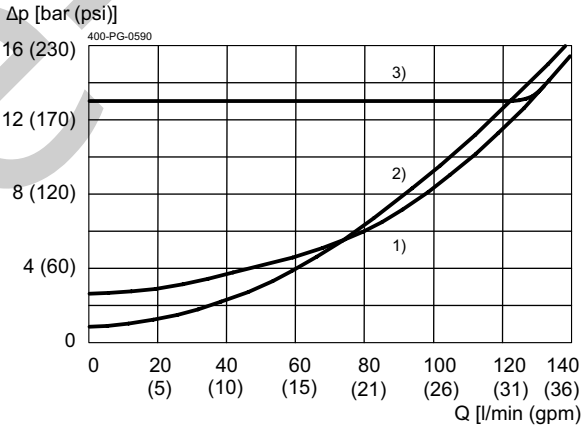

1) = B → A, de-energized
2) = A → B, de-energized
3) = B → A, energized

Phase-Out

BUCHER
hydraulics
WWW.SUMY.IR

Δp = f (Q) Pressure drop-flow rate characteristic

Version "N" – 27/25 W

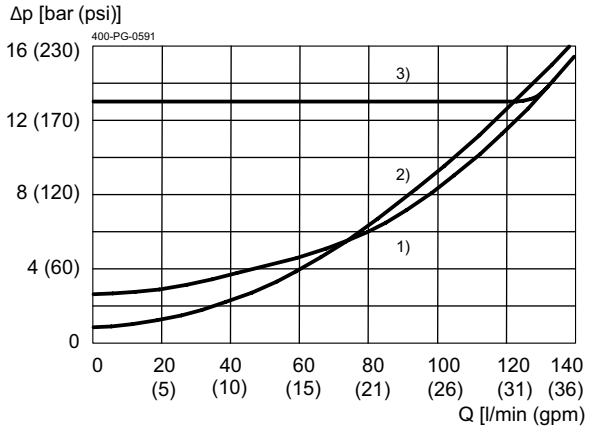

1) = B → A, de-energized
2) = A → B, de-energized
3) = B → A, energized

Phase-Out

BUCHER
hydraulics
WWW.SUMY.IR

Dimensions and sectional view

Beispiel für die Masseinheit:
Example for the dimensional units:

0.79 = 0.79 mm millimeter
(.031) = 0.031" inch

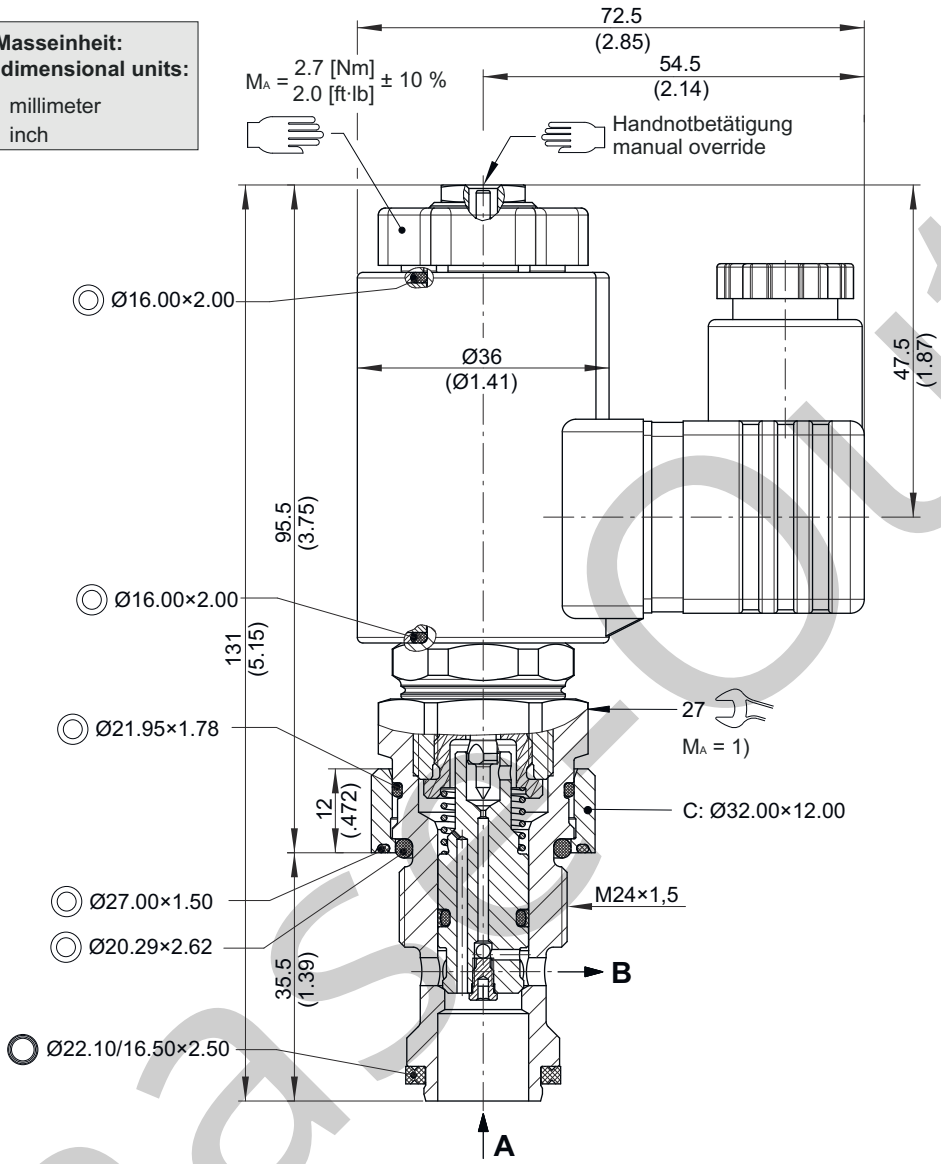

Installation information

NOTE!
1) When fitting the screw-in cartridge valve, use the specified tightening torque. The value can be found in the chapter "Technical data".

ATTENTION!
Only qualified personnel with mechanical skills may carry out any maintenance work. Generally, the only work that should ever be undertaken is to check, and possibly replace, the seals. When changing seals, oil or grease the new seals thoroughly before fitting them.

NOTE!
The seals are not available individually. The seal kit order number can be found in the chapter "Technical data".

Phase out

Ordering code

Ex. W R A 22O E C A - 10 _ - 3 24 D - _

W	=	directional valve
R	=	check valve function, pilot operated
A	=	blocking direction A to B
22O	=	2-way/2-position, normally open
E	=	electrically operated, V DC = 17 W / V AC = 17 W *(standard)*
N	=	electrically operated, V DC = 27 W / V AC = 25 W
C	=	cavity type DC
A ... Q	=	standard model according to valid data sheet *(standard)*
Z ... R	=	special model after consultation
10	=	nominal size 10
(blank)	=	NBR (nitril-butadien-rubber / BUNA) seals *(standard)*
V	=	FKM (fluorocarbon rubber / VITON) seals *(special seals - please consult BUCHER)*
1 ... 9	=	technical design no. (omit when ordering)
...	=	voltage e.g. 24 (24 V)
D	=	current DC
A	=	current AC
(blank)	=	DIN EN 175301-803 connection, 3-pole 2 P+E with mating plug, IP 65 *(standard)*
M100	=	DIN EN 175301-803 connection, 3-pole 2 P+E
C	=	Kostal plug connection (IP 65)
JT	=	Junior Timer radial plug connection (with protection diode, IP 65)
IT	=	Junior Timer axial plug connection (with protection diode, IP 65)
D	=	Deutsch plug connection DT04-2P (IP 67/69K)
DT	=	Deutsch plug connection DT04-2P (with protection diode, IP 67/69K)
S	=	AMP Superseal 1.5 (IP 67) / Metri-Pack 150 (IP 65) plug connection
F	=	flying leads (500 mm)

mating plug not supplied

Related data sheets

Reference	Description
400-P-040011	Form tools
400-P-060111	Cavity DC
400-P-740101	Threaded port body DC-12
400-P-120110	Solenoid coil D36

Phase-Out

info.ch@bucherhydraulics.com www.bucherhydraulics.com

© 2025 by Bucher Hydraulics AG Frutigen, 3714 Frutigen, Switzerland

All rights reserved.
Data is provided for the purpose of product description only, and must not be construed as warranted characteristics in the legal sense. The information does not relieve users from the duty of conducting their own evaluations and tests. Because the products are subject to continual improvement, we reserve the right to amend the product specifications contained in this catalogue.

BUCHER hydraulics

WWW.SUMY.IR

Directional valve 2-way/2-position

Q_{max} = 140 l/min, p_{max} = 350 bar
switching solenoid with emergency override, pilot operated, poppet type
Type series: WRA22O_DA-10...

- Screw-in cartridge valve
- For cavity DD
- All external parts with zinc-nickel coating according to DIN EN ISO 19598
- Installation in threaded port body type DD-12 / DDY-12
- The slip-on coil can be rotated, and it can be replaced without opening the hydraulic envelope
- High pressure wet-armature solenoids
- Various plug-connector systems and voltages are available
- Seat tight shut-off
- High flow rates
- With manual override
- Also available as stack valve

Description

The 2-way/2-position solenoid-operated directional seat valves, series WRA22_D..., are size 10, two stage, screw-in valves with an M24x1,5 mounting thread. The main and pilot stages are both designed on the poppet/seat principle, therefore virtually leak-free. The straightforward design delivers a good price/performance ratio and outstanding head loss/ flow ratings. All external parts of the screw-in valves are zinc-nickel plated, and are thus suitable for use in the harshest operating environments. The slip-on coils can be replaced without opening the hydraulic envelope and can be positioned at any angle through 360°. These valves are primarily used as pilot valves in certain mobile and industrial applications where leak-tight shut-off functions are crucially important. Examples are where loads, tensions, or clamping forces must be held without leakage. For self-assembly, please refer to the section related data sheets.

Symbol

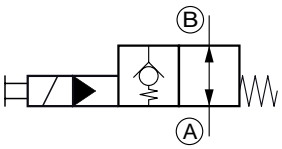

Technical Data

General Characteristics	Description, value, unit
Function group	Directional valve
Function	2-way/2-position
Design	Screw-in cartridge valve
Controls	switching solenoid with emergency override
Characteristic	pilot operated, poppet type
Construction size	nominal size 10
Thread size	M24×1,5
Mounting attitude	unrestricted
Weight	0.50 kg
Cavity acc. factory standard	For cavity DD
Tightening torque steel	65 Nm
Tightening torque aluminium	50 Nm
Tightening torque tolerance	± 10 %
Minimum ambient temperature	- 25 °C
Maximum ambient temperature	+ 50 °C
Surface protection	All external parts with zinc-nickel coating according to DIN EN ISO 19598
Available seal types	several seal types available, see ordering code
Seal kit order number	NBR: DS-276-N / FKM: DS-276-V

Hydraulic Characteristics	Description, value, unit
Maximum operating pressure	350 bar
Maximum flow rate	140 l/min
Flow direction	see symbol
Hydraulic fluid	HL and HLP mineral oil according to DIN 51 524; other fluids on request!
Minimum fluid temperature	- 25 °C
Maximum fluid temperature	+ 80 °C
Viscosity range	10 ... 500 mm^2/s (cSt)
Recommended viscosity range	15 ... 250 mm^2/s (cSt)
Minimum fluid cleanliness (cleanlineless class according to ISO 4406:1999)	class 20/18/15

Electric Characteristics	Description, value, unit
Actuator type	solenoid coil
Solenoid coils type	D36
Supply voltage DC	12/24 V DC
Supply voltage AC	115/230 V AC (50 ... 60 Hz) V AC
Supply voltage tolerance	± 10 %
Maximum permissible power consumption	Version "E": V DC = 17 W / V AC = 17 W Version "N": V DC = 27 W / V AC = 25 W
Switching time	Version "E": 66...132 ms (energized) / 16...66 ms (de-energized) Version "N": 54...142 ms (energized) / 18...60 ms (de-energized)

Electric Characteristics	Description, value, unit
Relative duty cycle	100 %
Electrical connection coil	several connection types available, see ordering code
Protection class solenoid coil to ISO 20 653 / EN 60 529	several classes of protection available, see ordering code (with appropriate mating connector and proper fitting and sealing)

NOTE!
The switching time can be strongly dependent on flow rate, pressure, oil viscosity and the dwell time under pressure. In practice, the switching time may therefore deviate from the specified value range.

Performance graphs

measured with oil viscosity 33.0 mm²/s (cSt), coil at steady-state temperature and 10 % undervoltage

Δp = f (Q) Pressure drop-flow rate characteristic

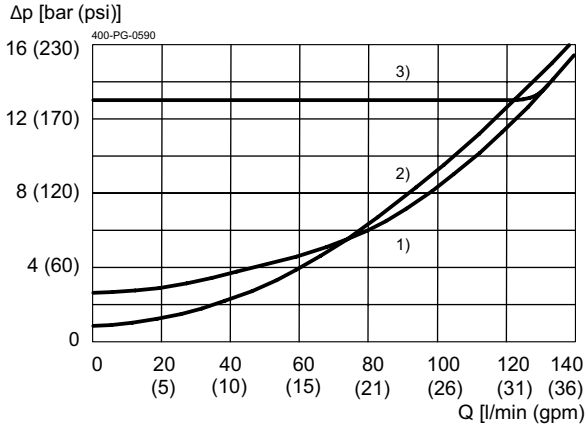

1) = B → A, de-energized
2) = A → B, de-energized
3) = B → A, energized

Version "E" – 17 W

Δp = f (Q) Pressure drop-flow rate characteristic

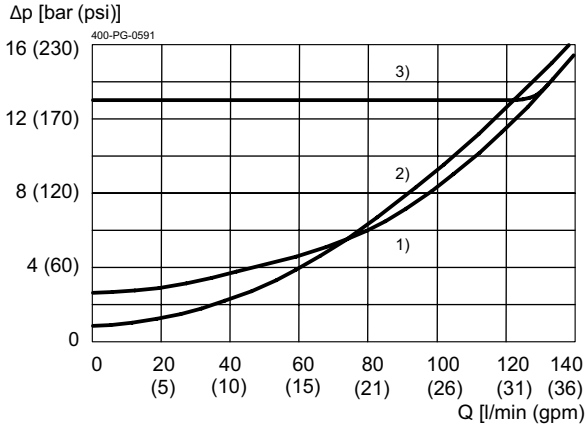

1) = B → A, de-energized
2) = A → B, de-energized
3) = B → A, energized

Version "N" – 27/25 W

Dimensions and sectional view

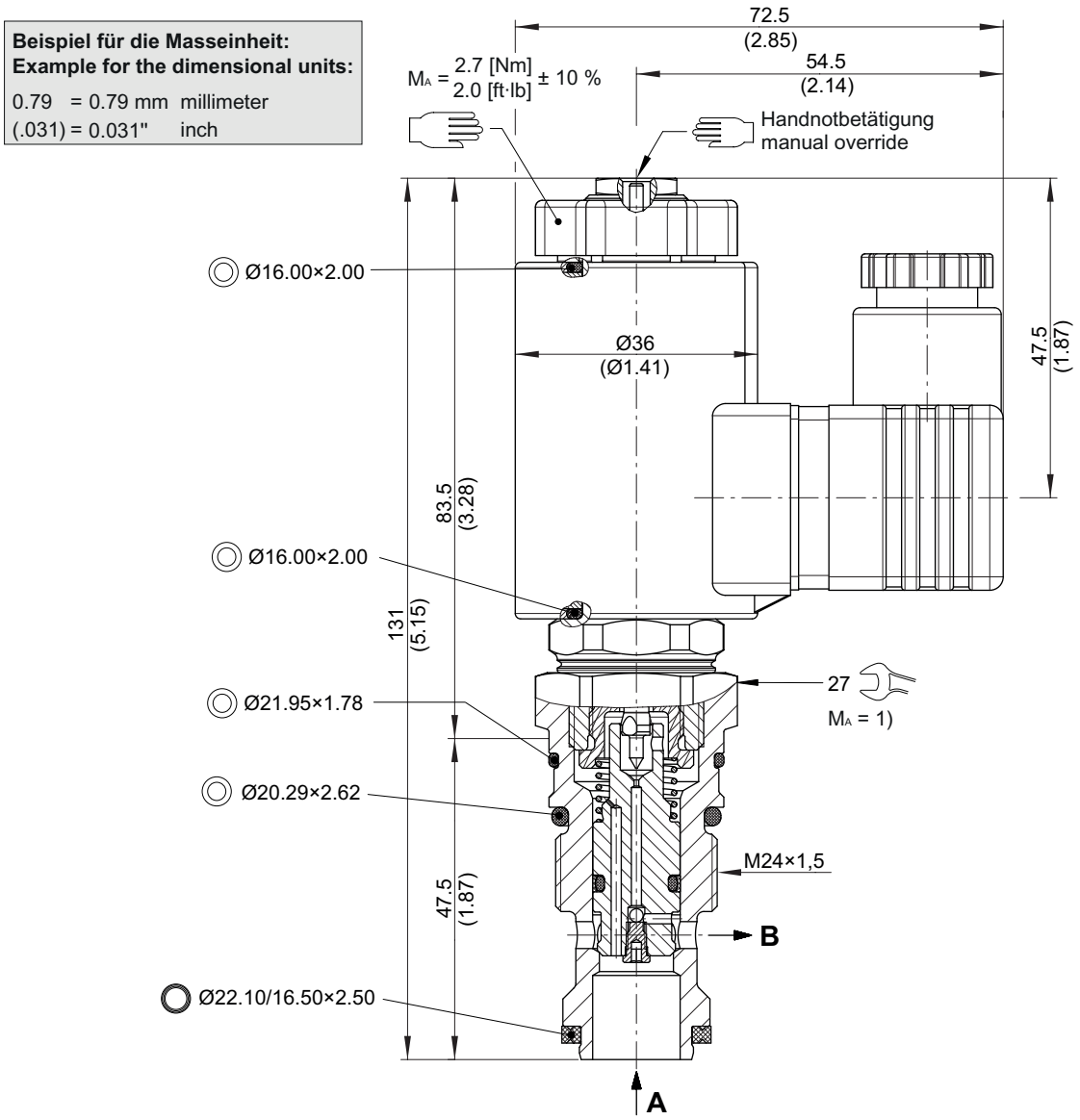

Installation information

NOTE!
1) When fitting the screw-in cartridge valve, use the specified tightening torque. The value can be found in the chapter "technical data".

NOTE!
The seals are not available individually. The seal kit order number can be found in the chapter "Technical data".

ATTENTION!
Only qualified personnel with mechanical skills may carry out any maintenance work. Generally, the only work that should ever be undertaken is to check, and possibly replace, the seals. When changing seals, oil or grease the new seals thoroughly before fitting them.

Ordering code

Ex. W R A 22O E D A - 10 _ - 3 24 D - _

W	=	directional valve
R	=	check valve function, pilot operated
A	=	blocking direction A to B
22O	=	2-way/2-position, normally open
E	=	electrically operated, V DC = 17 W / V AC = 17 W *(standard)*
N	=	electrically operated, V DC = 27 W / V AC = 25 W
D	=	cavity type DD
A ... Q	=	standard model according to valid data sheet *(standard)*
Z ... R	=	special model after consultation
10	=	nominal size 10
(blank)	=	NBR (nitril-butadien-rubber / BUNA) seals *(standard)*
V	=	FKM (fluorocarbon rubber / VITON) seals *(special seals - please consult BUCHER)*
1 ... 9	=	technical design no. (omit when ordering)
...	=	voltage e.g. 24 (24 V)
D	=	current DC
A	=	current AC
(blank)	=	DIN EN 175301-803 connection, 3-pole 2 P+E with mating plug, IP 65 *(standard)*
M100	=	DIN EN 175301-803 connection, 3-pole 2 P+E
C	=	Kostal plug connection (IP 65)
JT	=	Junior Timer radial plug connection (with protection diode, IP 65)
IT	=	Junior Timer axial plug connection (with protection diode, IP 65)
D	=	Deutsch plug connection DT04-2P (IP 67/69K)
DT	=	Deutsch plug connection DT04-2P (with protection diode, IP 67/69K)
S	=	AMP Superseal 1.5 (IP 67) / Metri-Pack 150 (IP 65) plug connection
F	=	flying leads (500 mm)

mating plug not supplied

Related data sheets

Reference	Description
400-P-040011	Forming tools
400-P-060121	Cavity DD
400-P-740111	Threaded port body DD-12
400-P-740112	Threaded port body DDY-12
400-P-120110	Solenoid coil D36

info.ch@bucherhydraulics.com **www.bucherhydraulics.com**

© 2021 by Bucher Hydraulics AG Frutigen, 3714 Frutigen, Switzerland

All rights reserved.
Data is provided for the purpose of product description only, and must not be construed as warranted characteristics in the legal sense. The information does not relieve users from the duty of conducting their own evaluations and tests. Because the products are subject to continual improvement, we reserve the right to amend the product specifications contained in this catalogue.

BUCHER hydraulics

WWW.SUMY.IR

Directional valve 2-way/2-position

Q_{max} = 5 l/min, p_{max} = 420 bar
Direct acting, poppet type, switching solenoid
Type series: WSP22GLA1...

- Screw-in cartridge valve for cavity AL
- All external parts with zinc-nickel plating according to DIN EN ISO 19598
- Installation in threaded port body type GALA
- Can be used as a high-pressure pilot valve
- With bidirectional seat-valve shut-off
- Low head loss
- Compact construction
- De-energized closed
- "Low watt" version
- The slip-on coil can be rotated, and it can be replaced without opening the hydraulic envelope
- High pressure wet-armature solenoids
- Various plug-connector systems and voltages are available

Symbol

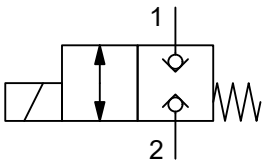

Description

The 2-way/2-position solenoid operated directional seat valves, series WSP22G..., are size 1, pressure balanced screw-in valves with a 3/4-16 UNF mounting thread. They are designed on the poppet/seat principle, and are therefore virtually leak-free in both directions of flow (bidirectional seat-valve shut-off). They are fitted with a low-watt coil (nominal power consumption 8 W). The straightforward design delivers an outstanding price/performance ratio. All external parts of the screw-in valves are zinc-nickel plated and are thus suitable for use in the harshest operating environments. The slip-on coils can be replaced without opening the hydraulic envelope and can be positioned at any angle through 360°. These valves are primarily used as pilot valves in certain mobile and industrial applications where leak-tight shut-off functions are crucially important. Examples are where loads, tensions, or clamping forces must be held without leakage. For self-assembly, please refer to the section related data sheets.

Technical data

General characteristics	Description, value, unit
Function group	directional valve
Function	2-way/2-position
Design	screw-in cartridge valve
Controls	switching solenoid
Characteristic	direct acting, poppet type
Construction size	NG 1
Thread size	3/4-16 UNF-2A
Mounting attitude	unrestricted
Weight	0.40 kg
Cavity acc. factory standard	AL
Tightening torque steel	60 Nm
Tightening torque aluminium	60 Nm
Tightening torque tolerance	± 10 %
Minimum ambient temperature	- 30 °C
Maximum ambient temperature	+ 50 °C
Surface protection	all external parts with zinc-nickel plating according to DIN EN ISO 19598
Sealing material	see ordering code
Seal kit order number	NBR: DS-246-N / FKM: DS-246-V

Hydraulic characteristics	Description, value, unit
Maximum operating pressure	420 bar
Maximum flow rate	5 l/min
Flow direction	see symbol
Hydraulic fluid	HL and HLP mineral oil according to DIN 51 524; other fluids on request!
Minimum fluid temperature	- 30 °C
Maximum fluid temperature	+ 80 °C
Viscosity range	10 ... 500 mm^2/s (cSt)
Recommended viscosity range	15 ... 250 mm^2/s (cSt)
Minimum fluid cleanliness (cleanlineless class according to ISO 4406:1999)	class 20/18/15

Electric characteristics	Description, value, unit
Actuator type	solenoid coil
Solenoid coils type	D36
Supply voltage DC	12/24 V DC
Nominal power consumption	8 W
Relative duty cycle	100 %
Electrical connection coil	several connection types available, see ordering code
Protection class solenoid coil to ISO 20 653 / EN 60 529	IP 65 / IP 67 / IP 69K, see “Ordering code” (with appropriate mating connector and proper fitting and sealing)

Performance graphs

measured with oil viscosity 33.0 mm²/s (cSt), coil at steady-state temperature and 10 % undervoltage

p = f (Q) Performance limit

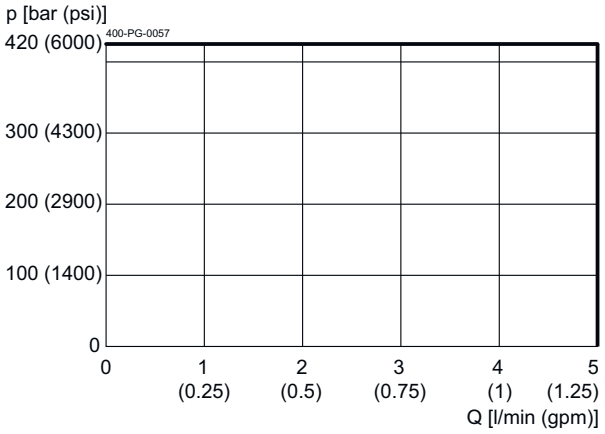

Δp = f (Q) Pressure drop-flow rate characteristic

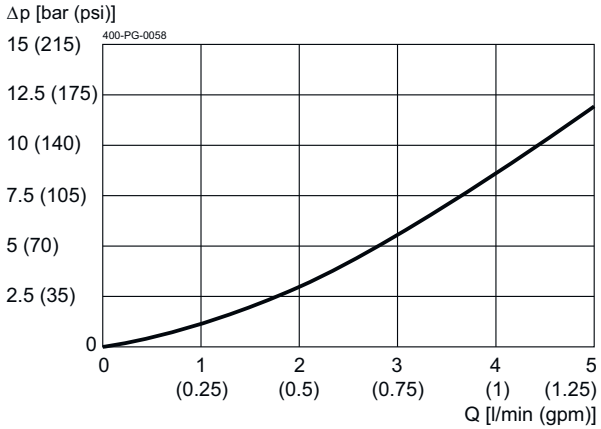

Installation

Beispiel für die Masseinheit:
Example for the dimensional units:

0.79 = 0.79 mm millimeter
(.031) = 0.031" inch

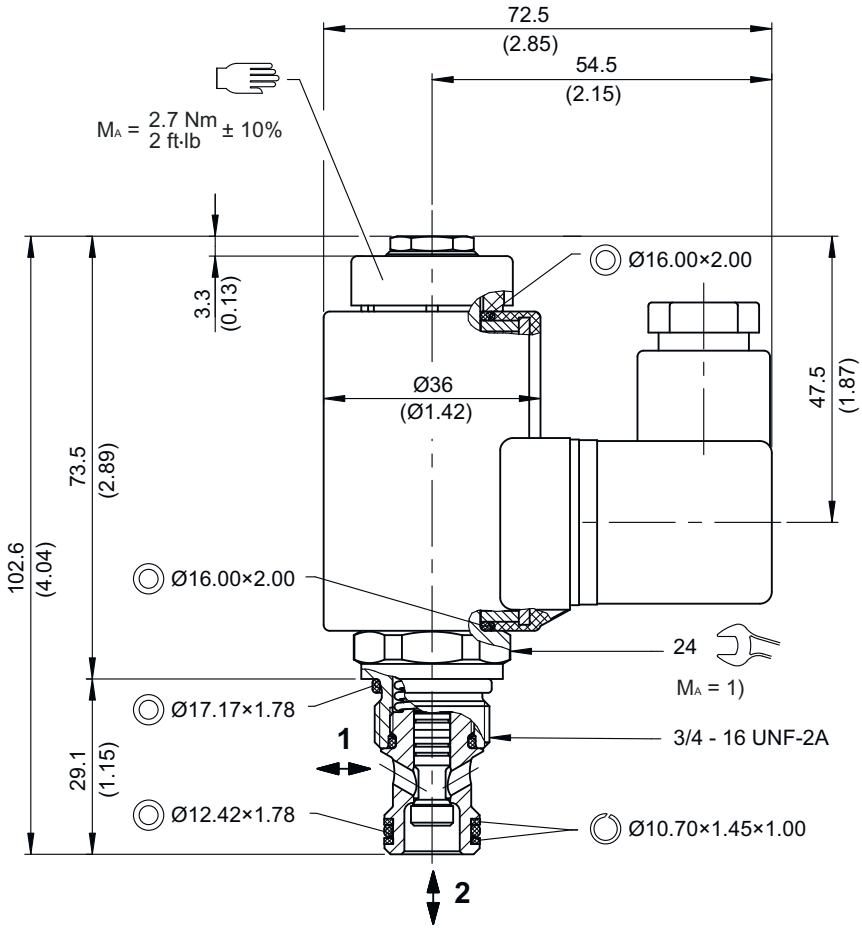

IMPORTANT!
1) When fitting the screw-in cartridge valve, use the specified tightening torque. The value can be found in the chapter "Technical data".

ATTENTION!
Only qualified personnel with mechanical skills may carry out any maintenance work. Generally, the only work that should ever be undertaken is to check, and possibly replace, the seals. When changing seals, oil or grease the new seals thoroughly before fitting them.

Ordering code

Ex. W S P 22G L A 1 _ - 2 24 D _

z.B. W S P 22G L A 1 _ - 1 24 VDC _

W = directional valve
S = seat valve, direct acting
P = high-pressure model, 420 bar
22G = 2-way/2-position function, de-energized closed
W = Wegeventil
L = electrically operated, VDC = 8 W *
S = Sitzausführung, direktgesteuert
A ... Q = standard model - see relevant data sheets
P = Hochdruckausführung, 420 bar
Y ... R = special features - please consult BUCHER
22G = 2/2-Wege, stromlos geschlossen
1 = nominal size 1 (primarily for pilot controls)
L = Elektrisch betätigt, V DC = 8 W
(blank) = NBR (nitril-butadien-rubber / BUNA) seals (standard)
A ... Q = Standard-Ausführung nach gültigen Datenblättern
Y ... R = Spezial-Ausführung nach Rücksprache
1 ... 9 = Nenngrösse 1 (vorzugsweise für Vorsteuerungen)
Ohne = NBR (Nitril) Dichtungen (Standard)
V = FKM (Viton) Dichtungen
D = current DC
(blank) = DIN EN 175301-803 connection, 3-pole 2 P+E with mating plug, IP 65 (standard)
1 ... 9 = Technischer Stand (bei Bestellung weglassen)
M100 = DIN EN 175301-803 connection, 3-pole 2 P+E
... = Spannungswert z.B. 24 = (24 V)
C = Kostal plug connection (IP 65)
Ohne = Gegenstecker nach ISO 4400 / DIN 43 650 **(Standard, IP 65)**
IT = Junior Timer radial plug connection (with protection diode, IP65)
M100 = Ohne DIN-Gegenstecker
IT = Junior Timer axial plug connection (with protection diode, IP65)
D = Deutsch plug connection DT04-2P (IP 67/69K)
C = Kostal-Stecker-Anschluss (IP 65)
DT = Deutsch plug connection DT04-2P (with protection diode, IP 67/69K)
JT = Junior-Timer-Radialstecker-Anschluss (mit Schutzdiode, IP 65)
S = AMP Superseal 1,5 (IP 67) / Metri-Pack 150 (IP 65)
IT = Junior-Timer-Axialstecker-Anschluss (mit Schutzdiode, IP 65)
F = flying leads (500 mm)
D = Deutsch-Stecker-Anschluss DT04-2P (IP 67/69K)
DT = Deutsch-Stecker-Anschluss DT04-2P (mit Schutzdiode, IP 67/69K)
S = AMP Superseal 1,5 (IP 67) / Metri-Pack 150 (IP 65)
F = Freie Kabelenden (500 mm)

For the following plug variants, please consult Bucher:
Nachfolgende Stecker-Varianten auf Anfrage:

mating plug not supplied

ohne Gegenstecker

IMPORTANT!
* = In the WSP 22GLA-1V... with 8 Watt coil, the piston is also in the FKM (Viton) version fitted with an NBR O-ring.

Related data sheets

Reference	Description
400-P-040011	form tools
400-P-120110	solenoid coil D36
400-P-040171	cavity AL
400-P-720101	threaded port body GALA

info.ch@bucherhydraulics.com **www.bucherhydraulics.com**

© 2026 by Bucher Hydraulics AG Frutigen, 3714 Frutigen, Switzerland

All rights reserved.
Data is provided for the purpose of product description only, and must not be construed as warranted characteristics in the legal sense. The information does not relieve users from the duty of conducting their own evaluations and tests. Because the products are subject to continual improvement, we reserve the right to amend the product specifications contained in this catalogue.

BUCHER hydraulics

WWW.SUMY.IR

Directional valve 2-way/2-position

Q_{max} = 15 l/min, p_{max} = 420 bar
switching solenoid, direct acting, poppet type
Type series: WSP22GNA3...

- Screw-in cartridge valve
- For cavity AL
- All external parts with zinc-nickel plating according to DIN EN ISO 19598
- Can be used as a high-pressure pilot valve
- With bidirectional seat-valve shut-off
- Low head loss
- Compact construction
- Installation in threaded port body type GALA
- De-energized closed
- "Low watt" version
- The slip-on coil can be rotated, and it can be replaced without opening the hydraulic envelope
- High pressure wet-armature solenoids
- Various plug-connector systems and voltages are available

Description

The 2-way/2-position solenoid operated directional seat valves, series WSP22G..., are size 3, pressure balanced screw-in valves with a 3/4-16 UNF mounting thread. They are designed on the poppet/seat principle, and are therefore virtually leak-free in both directions of flow (bidirectional seat-valve shut-off). They are fitted with a low-watt coil (nominal power consumption 8 W). The straightforward design delivers an outstanding price/ performance ratio. All external parts of the screw-in valves are zinc-nickel plated, and are thus suitable for use in the harshest operating environments. The slip-on coils can be replaced without opening the hydraulic envelope and can be positioned at any angle through 360°. These valves are primarily used as pilot valves in certain mobile and industrial applications where leak-tight shut-off functions are crucially important. Examples are where loads, tensions, or clamping forces must be held without leakage. For self-assembly, please refer to the section related data sheets.

Symbol

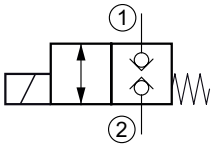

Technical data

General characteristics	Description, value, unit
Function group	Directional valve
Function	2-way/2-position
Design	Screw-in cartridge valve
Controls	switching solenoid
Characteristic	direct acting, poppet type
Construction size	NG 3
Thread size	3/4-16 UNF-2A
Mounting attitude	unrestricted
Weight	0.40 kg
Cavity acc. factory standard	For cavity AL
Tightening torque steel	60 Nm
Tightening torque aluminium	60 Nm
Tightening torque tolerance	± 10 %
Minimum ambient temperature	- 25 °C
Maximum ambient temperature	+ 50 °C
Surface protection	All external parts with zinc-nickel plating according to DIN EN ISO 19598
Sealing material	see ordering code
Seal kit order number	NBR: DS-246-N / FKM: DS-246-V

Hydraulic characteristics	Description, value, unit
Maximum operating pressure	420 bar
Maximum flow rate	15 l/min
Flow direction	see symbol
Hydraulic fluid	HL and HLP mineral oil according to DIN 51 524; other fluids on request!
Minimum fluid temperature	- 25 °C
Maximum fluid temperature	+ 80 °C
Viscosity range	10 ... 500 mm^2/s (cSt)
Recommended viscosity range	15 ... 250 mm^2/s (cSt)
Minimum fluid cleanliness (cleanlineless class according to ISO 4406:1999)	class 20/18/15

Electric characteristics	Description, value, unit
Actuator type	solenoid coil
Solenoid coils type	D36
Supply voltage DC	12/24 V DC
Supply voltage AC	115/230 (50 ... 60 Hz) V AC
Maximum permissible power consumption	V DC = 27 W / V AC = 25 W
Relative duty cycle	100 %
Electrical connection coil	several connection types available, see ordering code
Protection class solenoid coil to ISO 20 653 / EN 60 529	IP 65 / IP 67 / IP 69K, see “Ordering code” (with appropriate mating connector and proper fitting and sealing)

Performance graphs

measured with oil viscosity 33.0 mm²/s (cSt), coil at steady-state temperature and 10 % undervoltage

p = f (Q) Performance limit

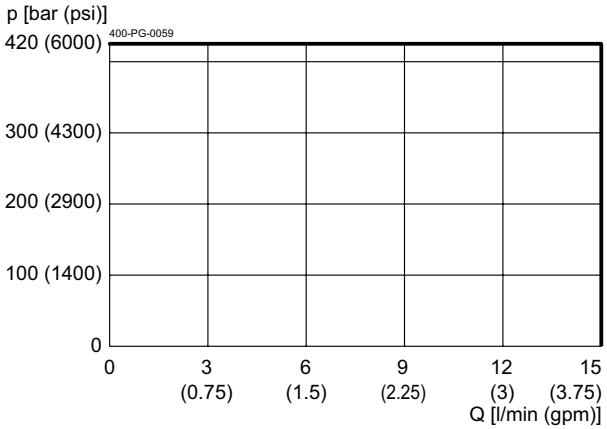

Δp = f (Q) Pressure drop-flow rate characteristic

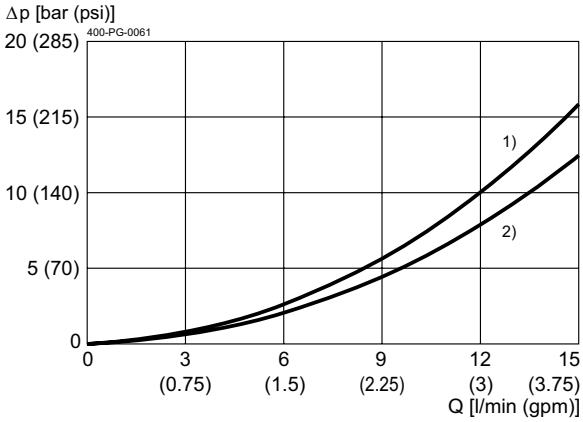

1) 2 → 1
2) 1 → 2

Dimensions and sectional view

Beispiel für die Masseinheit:
Example for the dimensional units:

0.79 = 0.79 mm millimeter
(.031) = 0.031" inch

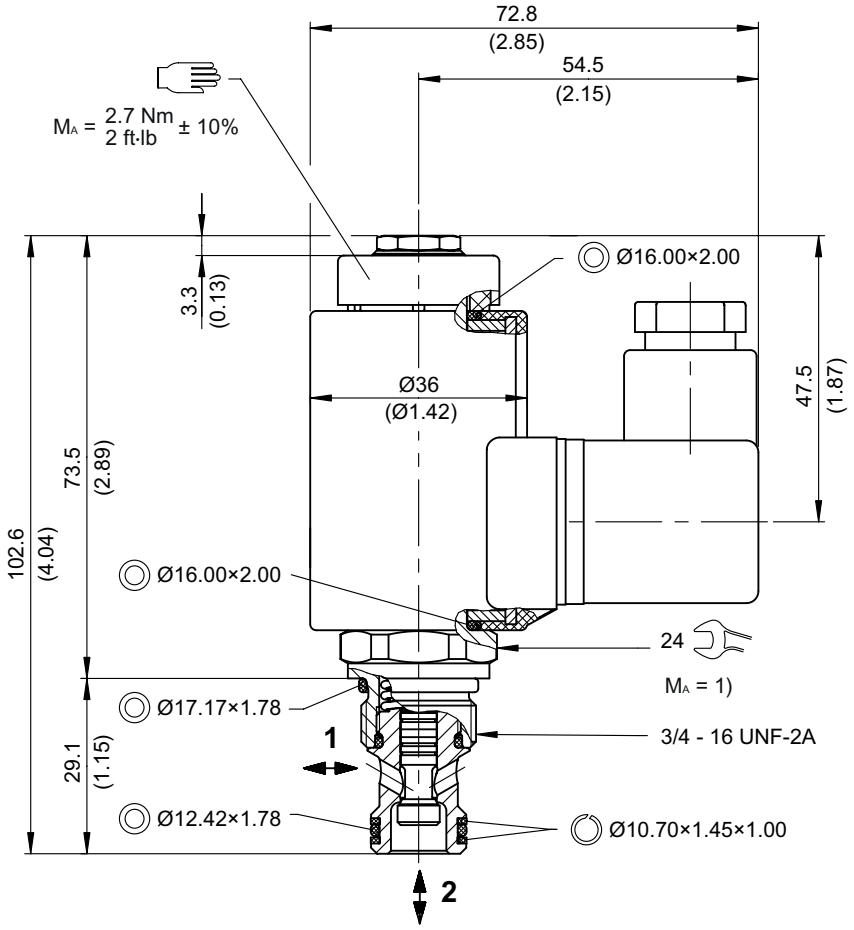

Installation information

IMPORTANT!
1) When fitting the screw-in cartridge valve, use the specified tightening torque. The value can be found in the chapter "Technical data".

ATTENTION!
Only qualified personnel with mechanical skills may carry out any maintenance work. Generally, the only work that should ever be undertaken is to check, and possibly replace, the seals. When changing seals, oil or grease the new seals thoroughly before fitting them.

Ordering code

Ex. W | S | P | 22G | N | A | 3 | _ - 2 | 24 | D | _

W	=	directional valve
S	=	seat valve, direct acting
P	=	high-pressure model, 420 bar
22G	=	2-way/2-position function, de-energized closed
N	=	electrically operated, V DC = 27 W / V AC = 25 W
A ... Q	=	standard model - see relevant data sheets
Y ... R	=	special features - please consult BUCHER
3	=	nominal size 1 *(primarily for pilot controls)*
(blank)	=	NBR (nitril-butadien-rubber / BUNA) seals **(standard)**
V	=	FKM (fluorocarbon rubber / VITON) seals *(special seals - please contact BUCHER)*
1 ... 9	=	design stage *(omit when ordering)*
...	=	voltage e.g. 24 (24 V)
D	=	current DC
A	=	current AC
(blank)	=	DIN EN 175301-803 connection, 3-pole 2 P+E with mating plug, IP 65 **(standard)**
M100	=	DIN EN 175301-803 connection, 3-pole 2 P+E *for the following plug-variants, please consult Bucher:*
C	=	Kostal plug connection (IP 65)
JT	=	Junior Timer radial plug connection (with protection diode, IP65)
IT	=	Junior Timer axial plug connection (with protection diode, IP65)
D	=	Deutsch plug connection DT04-2P (IP 67/69K)
DT	=	Deutsch plug connection DT04-2P (with protection diode, IP 67/69K)
S	=	AMP Superseal 1.5 (IP 67) / Metri-Pack 150 (IP 65)
F	=	flying leads (500 mm)

mating plug not supplied

Related data sheets

Reference	Description
400-P-040011	Form tools
400-P-120110	Solenoid coil D36
400-P-040171	Cavity AL
400-P-720101	Threaded port body GALA

info.ch@bucherhydraulics.com **www.bucherhydraulics.com**

© 2023 by Bucher Hydraulics AG Frutigen, 3714 Frutigen, Switzerland

All rights reserved.
Data is provided for the purpose of product description only, and must not be construed as warranted characteristics in the legal sense. The information does not relieve users from the duty of conducting their own evaluations and tests. Because the products are subject to continual improvement, we reserve the right to amend the product specifications contained in this catalogue.

WWW.SUMY.IR

General information
Cavity

Type series: AA

Dimensions and sectional view

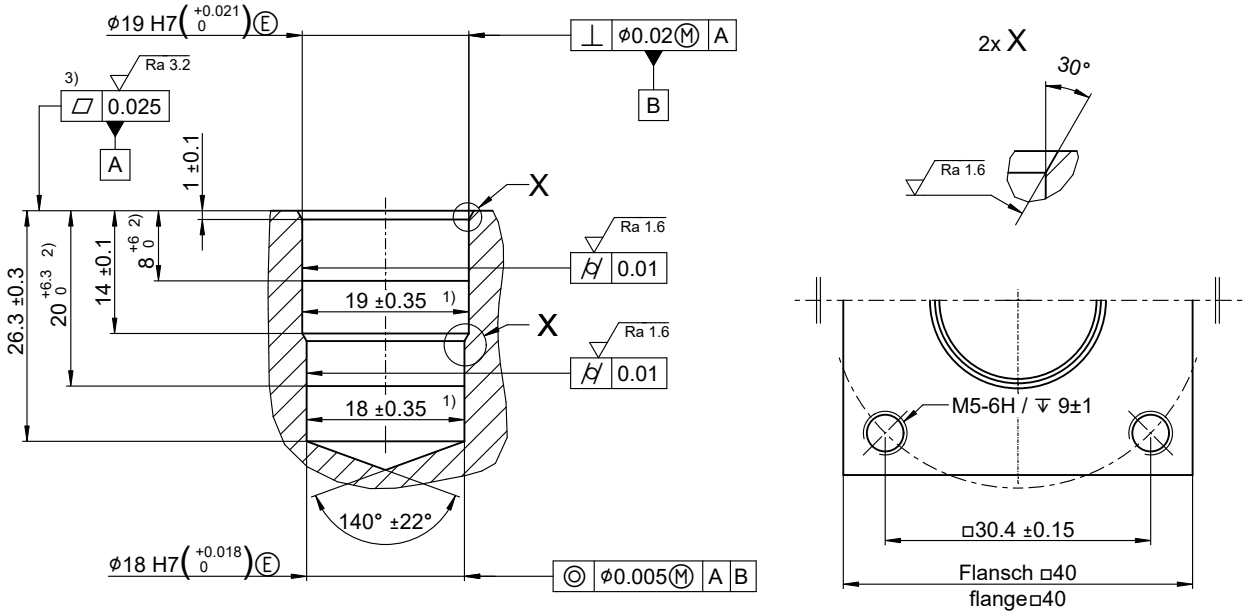

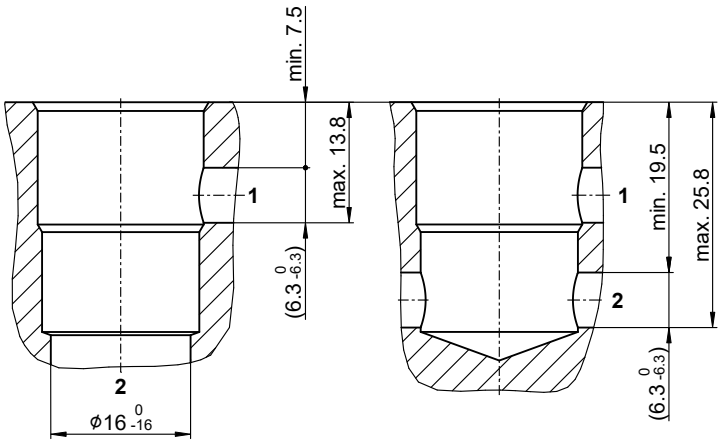

Ra 6.3

1) Vorbearbeitungs-Ø / pre-drilling diameters
2) Passungstiefe / minimum depth of specified diametral tolerance
3) Ø26 / ↧0,1±0,1

Installation information

ATTENTION!
You must maintain the specified positional and diametral tolerances. To ensure trouble-free operation of the screw-in cartridges, we strongly recommend that pilot drilling, boring, reaming and cavity thread-cutting are always performed in one setup.

NOTE!
We offer form tool sets for sale or hire. For further information, see data sheet 400-P-040011.

NOTE!
Cavity type to factory standard.

info.ch@bucherhydraulics.com www.bucherhydraulics.com

© 2024 by Bucher Hydraulics AG Frutigen, 3714 Frutigen, Switzerland

All rights reserved.
Data is provided for the purpose of product description only, and must not be construed as warranted characteristics in the legal sense. The information does not relieve users from the duty of conducting their own evaluations and tests. Because the products are subject to continual improvement, we reserve the right to amend the product specifications contained in this catalogue.

BUCHER hydraulics

WWW.SUMY.IR

Directional valve 2-way/2-position

Q_{max} = 40 l/min, p_{max} = 315 bar
Direct acting, poppet type, switching solenoid
Type series: W1C_B... (installation shallow)

- Slip-in cartridge valve for cavity AA
- All external parts with zinc-nickel plating according to DIN EN ISO 19598
- Guided valve spool and poppet
- With bidirectional seat-valve shut-off
- With or without manual override
- As an option, hand lever can be fitted to solenoid
- De-energized closed
- The slip-on coil can be rotated, and it can be replaced without opening the hydraulic envelope
- High pressure wet-armature solenoids
- Various plug-connector systems and voltages are available

Symbol

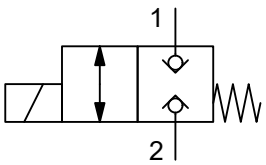

Without manual override (standard)

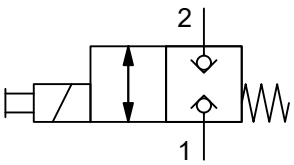

With manual override

Description

The 2-way/2-position solenoid operated directional seat valves, series W1C_B (shallow), are size 6, direct acting, pressure balanced, push-in valves. They are designed on the poppet/seat principle and are leak-tight in both flow directions (bidirectional seat-valve shut-off). The guide spool has a seal. This version is the mounting version "shallow" which fits into the cavity AA according to factory standard. See separate data sheet for the mounting version "deep". These valves are also available with or without manual override, and with the option of an additional hand lever. All external parts of the screw-in valves are zinc-nickel plated and are thus suitable for use in the harshest operating environments. The slip-on coils can be replaced without opening the hydraulic envelope and can be positioned at any angle through 360°. These valves are predominantly used in

certain mobile and industrial applications where leak-tight shut-off functions are crucially important. Examples are where loads, tensions, or clamping forces must be held without leakage. For self-assembly, please refer to the section related data sheets.

Technical data

General characteristics	Description, value, unit
Function group	directional valve
Function	2-way/2-position
Design	slip-in cartridge valve
Controls	switching solenoid
Characteristic	direct acting, poppet type
MTTFd value	150 years
Construction size	NG 6
Mounting attitude	unrestricted
Weight	0.85 kg
Cavity acc. factory standard	AA
Tightening torque steel	5.2 Nm
Tightening torque aluminium	5.2 Nm
Tightening torque tolerance	± 5 %
Minimum ambient temperature	- 25 °C
Maximum ambient temperature	+ 50 °C
Surface protection	all external parts with zinc-nickel plating according to DIN EN ISO 19598
Sealing material	see ordering code
Seal kit order number	NBR: DS-095-N / FKM: DS-095-V

IMPORTANT!
The less favorable values from the general, hydraulic and electrical characteristics determine the temperature range of the whole valve.

Hydraulic characteristics	Description, value, unit
Maximum operating pressure	315 bar
Maximum flow rate	40 l/min
Flow direction	see symbol
Hydraulic fluid	HL and HLP mineral oil according to DIN 51 524; other fluids on request!
Minimum fluid temperature	- 25 °C
Maximum fluid temperature	+ 80 °C
Viscosity range	10 ... 500 mm^2/s (cSt)
Recommended viscosity range	15 ... 250 mm^2/s (cSt)
Minimum fluid cleanliness (cleanlineless class according to ISO 4406:1999)	class 20/18/15

WWW.SUMY.IR

Electric characteristics	Description, value, unit
Actuator type	solenoid coil
Solenoid coils type	D45/207
Supply voltage DC	12/24 V DC
Supply voltage AC	115/230 (50 ... 60 Hz) V AC
Supply voltage tolerance	± 10 %
Nominal power consumption	V DC = 30 ... 32 W / V AC = 31 ... 32 W
Switching time	25 ... 170 ms (energizing), 15 ... 70 ms (de-energizing)
Relative duty cycle	100 %
Electrical connection coil	several connection types available, see ordering code
Protection class solenoid coil to ISO 20 653 / EN 60 529	several classes of protection available, see ordering code (with appropriate mating connector and proper fitting and sealing)

IMPORTANT!
To ensure the performance data is not compromised, it is imperative to use coils D45/207 according to data sheet 400-P-120120.

NOTE!
These times are strongly influenced by fluid pressure, flow rate and viscosity, as well as by the dwell time under pressure.

Performance graphs

measured with oil viscosity 33.0 mm²/s (cSt), coil at steady-state temperature and 10 % undervoltage

p = f (Q) Performance limit

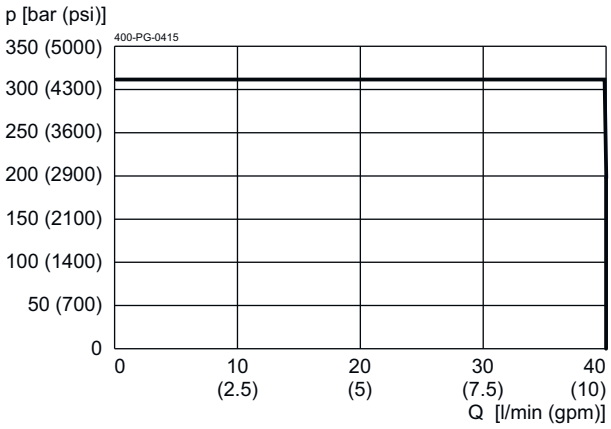

Δp = f (Q) Pressure drop-flow rate characteristic

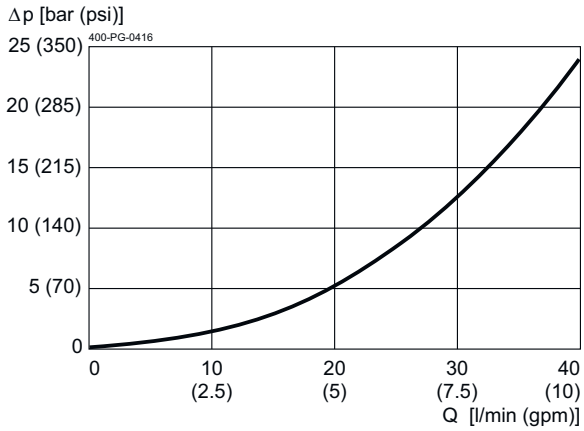

Installation

Beispiel für die Masseinheit:
Example for the dimensional units:
0.79 = 0.79 mm millimeter
(.031) = 0.031" inch

Ohne Handnotbetätigung (Standard)
without manual override (standard)

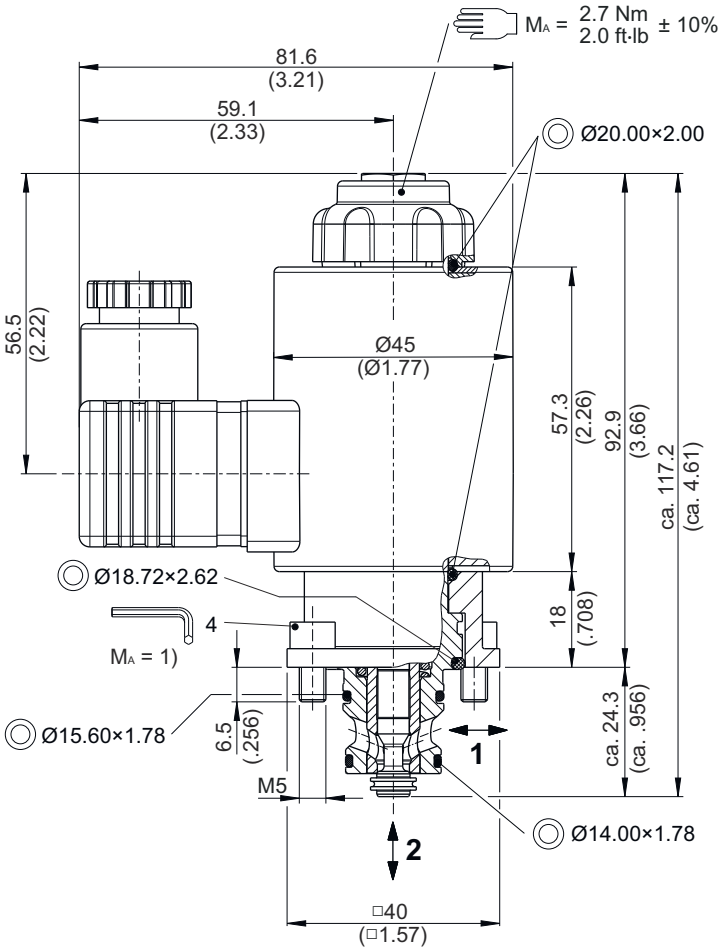

Mit Handnotbetätigung
with manual override

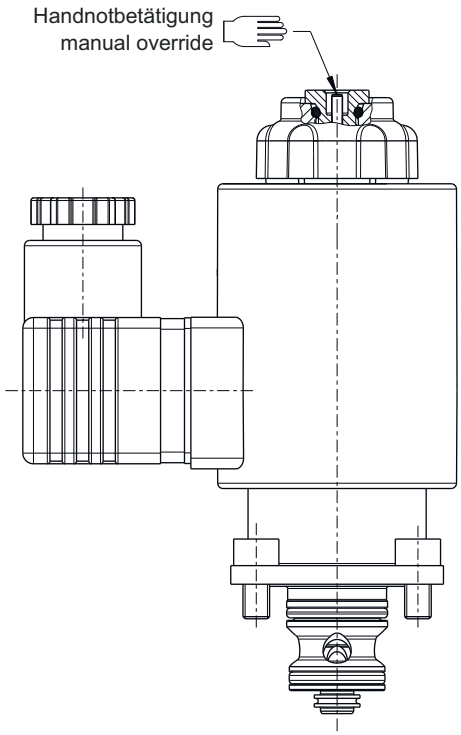

Abmessungen siehe Abbildung links
Dimensions see drawing on the left

ATTENTION!
Only qualified personnel with mechanical skills may carry out any maintenance work. Generally, the only work that should ever be undertaken is to check, and possibly replace, the seals. When changing seals, oil or grease the new seals thoroughly before fitting them.

NOTE!
1) When fitting the slip-in valves, use the specified tightening torque for the mounting screws. The value can be found in the chapter "Technical data".

NOTE!
These valves can also be fitted in the cavity AC according to factory standard, and in such cases port 3 then has the same function as port 2.

IMPORTANT!
When replacing an old coil with connection according to DIN 43650/ISO4400 (with other Pin setup than according to datasheet 400-P-120120), the new coil can be mounted in 180° reversed position so that the existing plug (with 180° earthingPIN) can be connected. This does not affect the performance data.

IMPORTANT!
A “de-energized open” function can be created by using the 3/2 solenoid cartridge valve and the GADA line-mounting body. In this case, ports 2 and 3 are used. Port 1 is plugged.

IMPORTANT!
Hand levers can only be fitted to valves that have a manual override.

Hand lever fitted on solenoid (optional)

As an option, these valves are available with an additional hand lever. The hand lever can be fitted on the solenoid. Two models can be supplied:

“HHB” hand lever with detent feature, and the “HHNB” hand lever without detent feature.

Beispiel für die Masseinheit:
Example for the dimensional units:
0.79 = 0.79 mm millimeter
(.031) = 0.031" inch

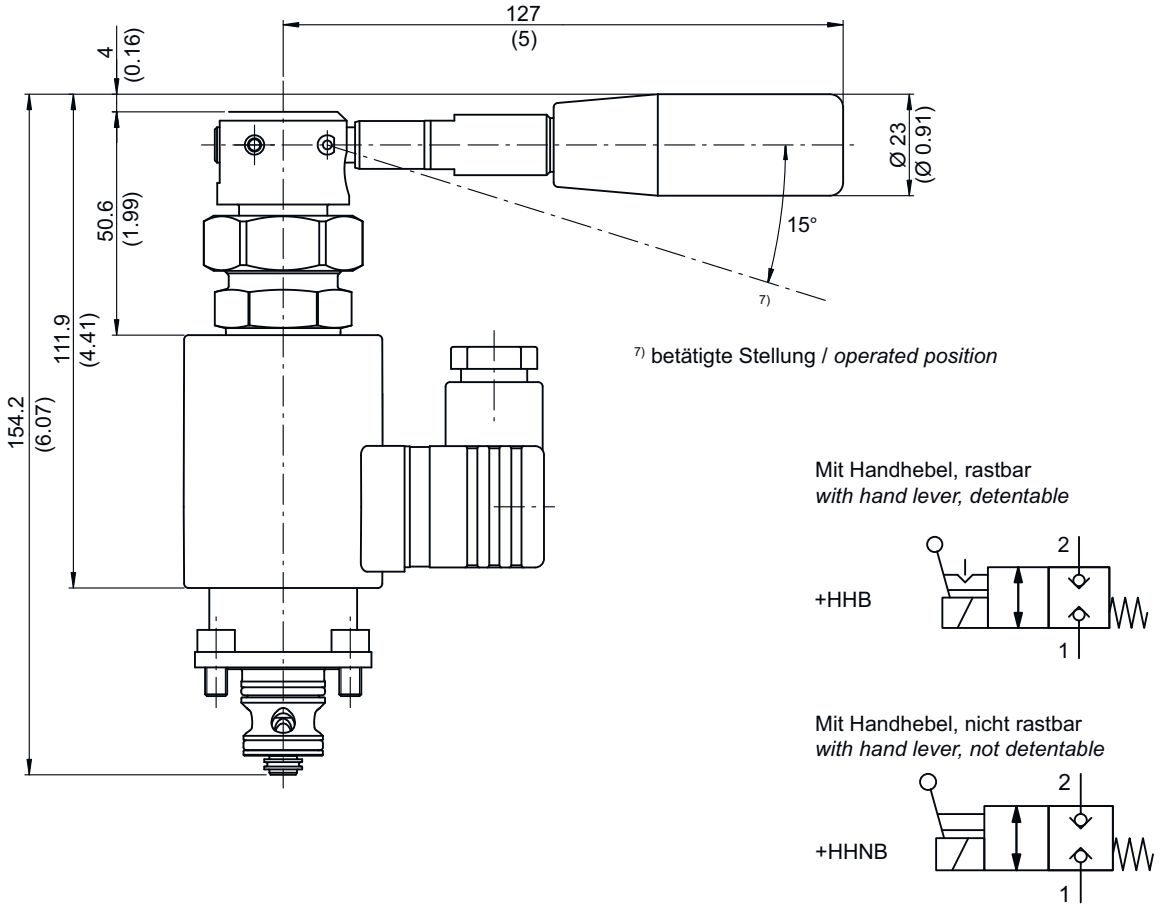

NOTE!
Hand levers can only be fitted to valves that have a manual override.

Ordering code

Ex. W1 C D B 3 24 D _ +HHB - 2

W1	= directional valve, poppet-type, direct acting
C	= 2-way/2-position, de-energized closed
D	= without manual override, with NBR (BUNA) seals **(standard)**
I	= without manual override, with FKM (VITON) seals
B	= with manual override, with NBR (BUNA) seals
G	= with manual override, with FKM (VITON) seals
A…Q	= standard model according to valid data sheet **(standard)**
Z…R	= special model after consultation
1…9	= technical design no. directional valve (omit when ordering)
…	= voltage e.g. 24 (24 V)
D	= current DC
A	= current AC
(blank)	= DIN EN 175301-803 connection, 3-pole 2 P+E with mating plug, IP 65 **(standard)**
M100	= DIN EN 175301-803 connection, 3-pole 2 P+E
DT	= Deutsch plug connection DT04-2P (with protection diode, IP 67/69K)
JT	= Junior Timer radial plug connection (with protection diode, IP 65)
F	= flying leads (600 mm)

mating plug not supplied

(blank)	= without hand lever *(standard)*
+HHB	= with hand lever, detentable
+HHNB	= with hand lever, not detentable
1…9	= technical design no. hand lever (omit when ordering)

Related data sheets

Reference	Description
400-P-040011	form tools
400-P-120120	solenoid coil D45/207
400-P-040101	cavity AA
400-P-730111	threaded port body GABA
400-P-730121	threaded port body GADA
400-P-010101	MTTFd Values for Hydraulic Valves

info.ch@bucherhydraulics.com **www.bucherhydraulics.com**

© 2026 by Bucher Hydraulics AG Frutigen, 3714 Frutigen, Switzerland

All rights reserved.
Data is provided for the purpose of product description only, and must not be construed as warranted characteristics in the legal sense. The information does not relieve users from the duty of conducting their own evaluations and tests. Because the products are subject to continual improvement, we reserve the right to amend the product specifications contained in this catalogue.

WWW.SUMY.IR

Directional valve 2-way/2-position

Q_{max} = 40 l/min, p_{max} = 315 bar
Direct acting, poppet type, switching solenoid
Type series: W1C_B... (installation deep)

- Slip-in cartridge valve for cavity AB
- All external parts with zinc-nickel plating according to DIN EN ISO 19598
- Guided valve spool and poppet
- With bidirectional seat-valve shut-off
- With or without manual override
- As an option, hand lever can be fitted to solenoid
- De-energized closed
- The slip-on coil can be rotated, and it can be replaced without opening the hydraulic envelope
- High pressure wet-armature solenoids
- Various plug-connector systems and voltages are available

Symbol

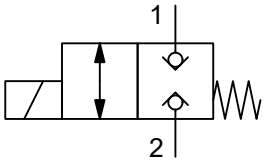

Without manual override (standard)

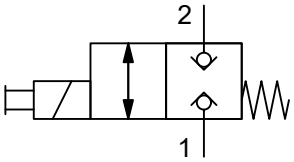

With manual override

Description

The 2-way/2-position solenoid operated directional seat valves, series W1C_B (installation deep), are size 6, direct acting, pressure balanced, push-in valves. They are designed on the poppet/seat principle and are leak-tight in both flow directions (bidirectional seat-valve shut-off). The guide spool has a seal. This version is the mounting version "deep" which fits into the cavity AB according to factory standard. See separate data sheet for the mounting version "shallow". These valves are also available with or without manual override, and with the option of an additional hand lever. All external parts of the screw-in valves are zinc-nickel plated and are thus suitable for use in the harshest operating environments. The slip-on coils can be replaced without opening the hydraulic envelope and can be positioned at any angle through 360°. These valves are predominantly used in

certain mobile and industrial applications where leak-tight shut-off functions are crucially important. Examples are where loads, tensions, or clamping forces must be held without leakage. For self-assembly, please refer to the section related data sheets.

Technical data

General characteristics	Description, value, unit
Function group	directional valve
Function	2-way/2-position
Design	slip-in cartridge valve
Controls	switching solenoid
Characteristic	direct acting, poppet type
MTTFd value	150 years
Construction size	NG 6
Mounting attitude	unrestricted
Weight	0.85 kg
Cavity acc. factory standard	AB
Tightening torque steel	5.2 Nm
Tightening torque aluminium	5.2 Nm
Tightening torque tolerance	± 5 %
Minimum ambient temperature	- 25 °C
Maximum ambient temperature	+ 50 °C
Surface protection	all external parts with zinc-nickel plating according to DIN EN ISO 19598
Sealing material	see ordering code
Seal kit order number	NBR: DS-095-N / FKM: DS-095-V

IMPORTANT!
The less favorable values from the general, hydraulic and electrical characteristics determine the temperature range of the whole valve.

Hydraulic characteristics	Description, value, unit
Maximum operating pressure	315 bar
Maximum flow rate	40 l/min
Flow direction	see symbol
Hydraulic fluid	HL and HLP mineral oil according to DIN 51 524; other fluids on request!
Minimum fluid temperature	- 25 °C
Maximum fluid temperature	+ 80 °C
Viscosity range	10 ... 500 mm^2/s (cSt)
Recommended viscosity range	15 ... 250 mm^2/s (cSt)
Minimum fluid cleanliness (cleanlineless class according to ISO 4406:1999)	class 20/18/15

WWW.SUMY.IR

Electric characteristics	Description, value, unit
Actuator type	solenoid coil
Solenoid coils type	D45/207
Supply voltage DC	12/24 V DC
Supply voltage AC	115/230 (50 ... 60 Hz) V AC
Supply voltage tolerance	± 10 %
Nominal power consumption	V DC = 30 ... 32 W / V AC = 31 ... 32 W
Switching time	25 ... 170 ms (energizing), 15 ... 70 ms (de-energizing)
Relative duty cycle	100 %
Electrical connection coil	several connection types available, see ordering code
Protection class solenoid coil to ISO 20 653 / EN 60 529	several classes of protection available, see ordering code (with appropriate mating connector and proper fitting and sealing)

IMPORTANT!
To ensure the performance data is not compromised, it is imperative to use coils D45/207 according to data sheet 400-P-120120.

NOTE!
These times are strongly influenced by fluid pressure, flow rate and viscosity, as well as by the dwell time under pressure.

Performance graphs

measured with oil viscosity 33.0 mm²/s (cSt), coil at steady-state temperature and 10 % undervoltage

p = f (Q) Performance limit

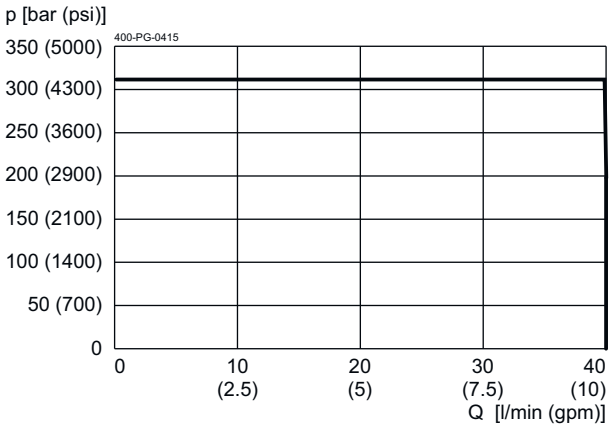

Δp = f (Q) Pressure drop-flow rate characteristic

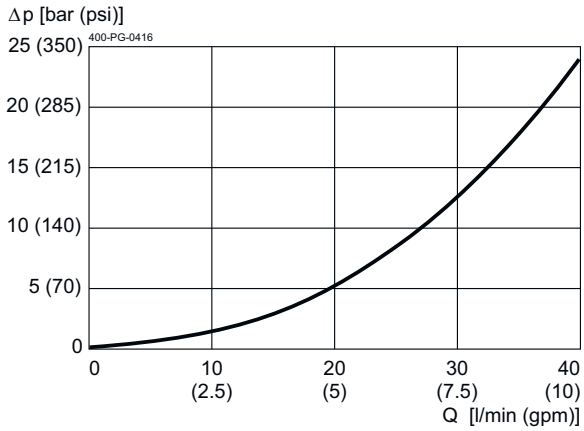

Installation

Beispiel für die Masseinheit:
Example for the dimensional units:
0.79 = 0.79 mm millimeter
(.031) = 0.031" inch

Ohne Handnotbetätigung (Standard)
without manual override (standard)

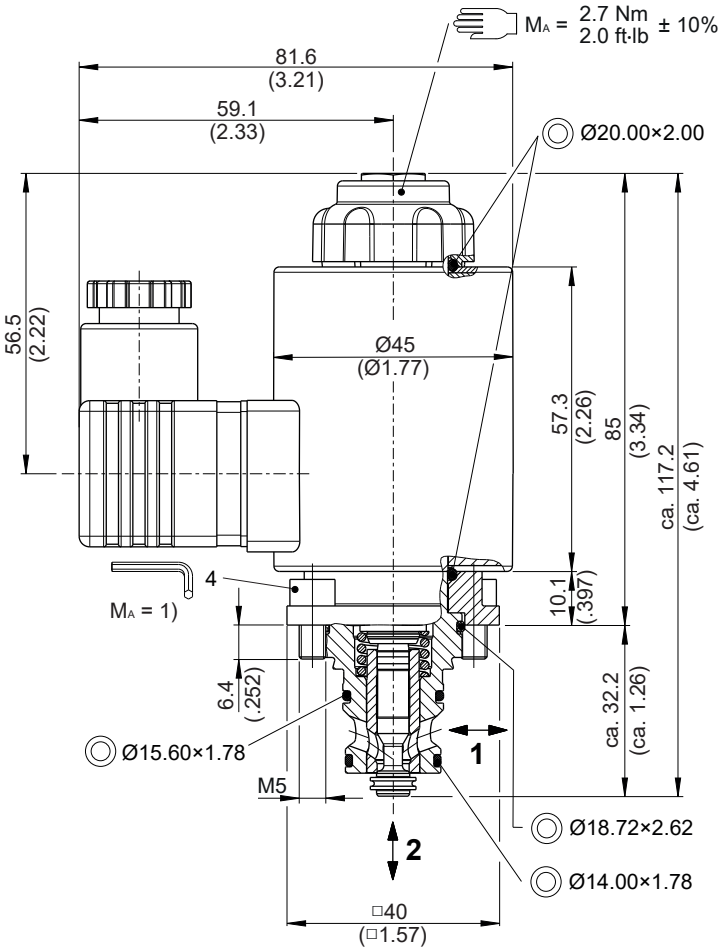

Mit Handnotbetätigung
with manual override

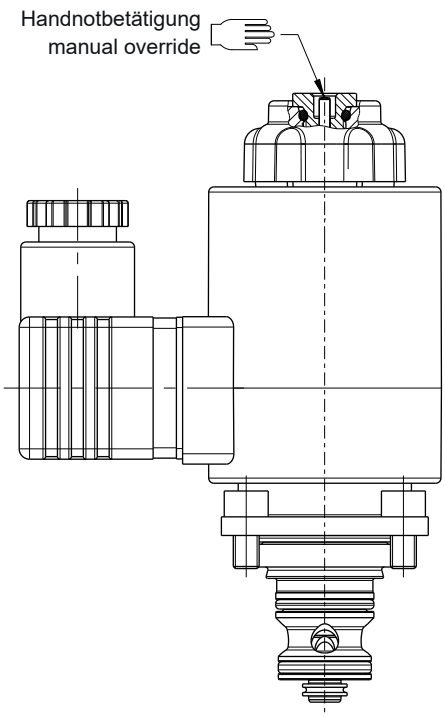

Abmessungen siehe Abbildung links
Dimensions see drawing on the left

ATTENTION!
Only qualified personnel with mechanical skills may carry out any maintenance work. Generally, the only work that should ever be undertaken is to check, and possibly replace, the seals. When changing seals, oil or grease the new seals thoroughly before fitting them.

NOTE!
1) When fitting the slip-in valves, use the specified tightening torque for the mounting screws. The value can be found in the chapter "Technical data".

NOTE!
These valves can also be fitted in the cavity AD according to factory standard, and in such cases port 3 then has the same function as port 2.

IMPORTANT!
When replacing an old coil with connection according to DIN 43650/ISO4400 (with other Pin setup than according to datasheet 400-P-120120), the new coil can be mounted in 180° reversed position so that the existing plug (with 180° earthingPIN) can be connected. This does not affect the performance data.

IMPORTANT!
A “de-energized open” function can be created by using the 3/2 solenoid cartridge valve and the GADA line-mounting body. In this case, ports 2 and 3 are used. Port 1 is plugged.

NOTE!
Hand levers can only be fitted to valves that have a manual override.

Hand lever fitted on solenoid (optional)

As an option, these valves are available with an additional hand lever. The hand lever can be fitted on the solenoid. Two models can be supplied: “HHB” hand lever with detent feature, and the “HHNB” hand lever without detent feature.

Beispiel für die Masseinheit:
Example for the dimensional units:
0.79 = 0.79 mm millimeter
(.031) = 0.031" inch

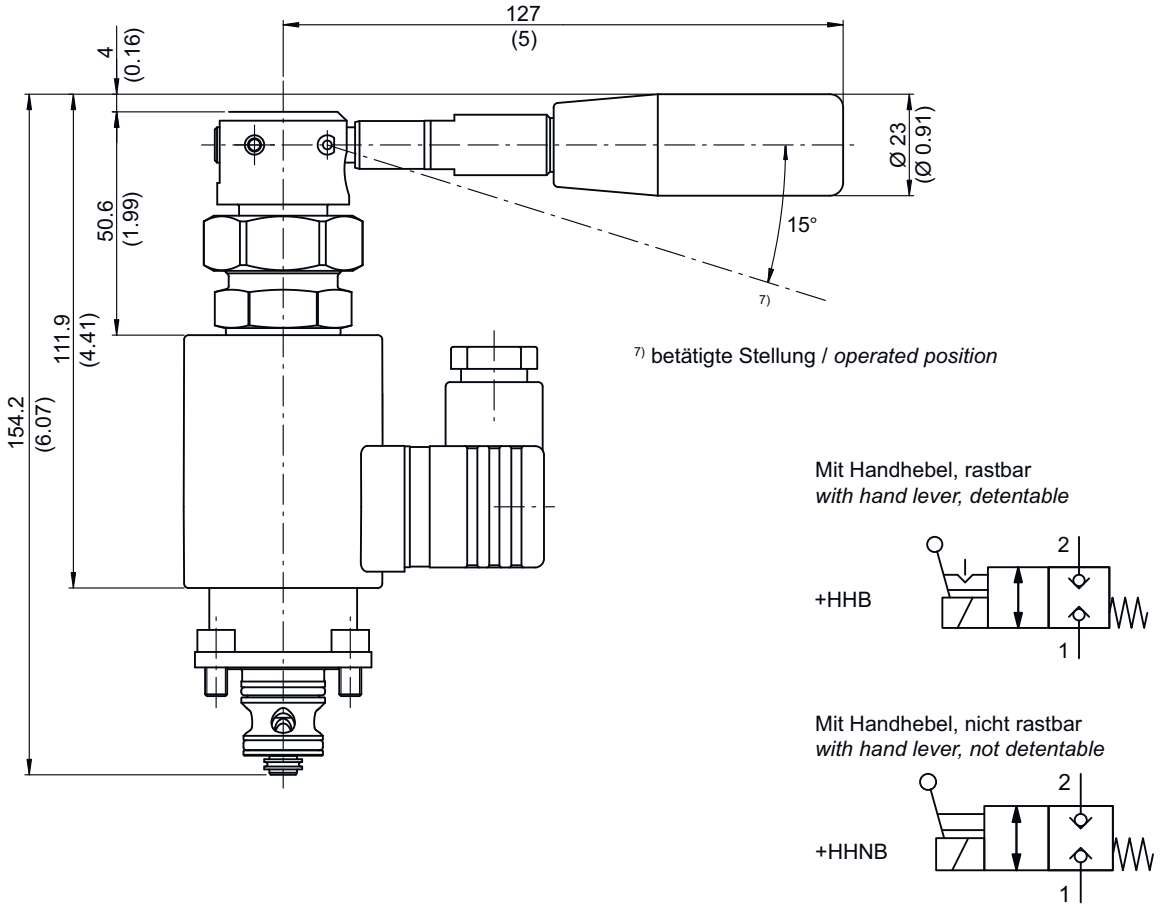

NOTE!
Hand levers can only be fitted to valves that have a manual override.

Ordering code

Ex. W1 C E B 3 24 D _ +HHB - 2

W1	= directional valve, poppet-type, direct acting
C	= 2-way/2-position, de-energized closed
E	= without manual override, with NBR (BUNA) seals **(standard)**
K	= without manual override, with FKM (VITON) seals
C	= with manual override, with NBR (BUNA) seals
H	= with manual override, with FKM (VITON) seals
A…Q	= standard model according to valid data sheet **(standard)**
Z…R	= special model after consultation
1…9	= technical design no. directional valve (omit when ordering)
…	= voltage e.g. 24 (24 V)
D	= current DC
A	= current AC
(blank)	= DIN EN 175301-803 connection, 3-pole 2 P+E with mating plug, IP 65 **(standard)**
M100	= DIN EN 175301-803 connection, 3-pole 2 P+E
DT	= Deutsch plug connection DT04-2P (with protection diode, IP 67/69K)
JT	= Junior Timer radial plug connection (with protection diode, IP 65)
F	= flying leads (600 mm)

mating plug not supplied

(blank)	= without hand lever *(standard)*
+HHB	= with hand lever, detentable
+HHNB	= with hand lever, not detentable
1…9	= technical design no. hand lever (omit when ordering)

Related data sheets

Reference	Description
400-P-040011	form tools
400-P-120120	solenoid coil D45/207
400-P-040102	cavity AB
400-P-730111	threaded port body GABA
400-P-730121	threaded port body GADA
400-P-010101	MTTFd Values for Hydraulic Valves

info.ch@bucherhydraulics.com **www.bucherhydraulics.com**

© 2026 by Bucher Hydraulics AG Frutigen, 3714 Frutigen, Switzerland

All rights reserved.
Data is provided for the purpose of product description only, and must not be construed as warranted characteristics in the legal sense. The information does not relieve users from the duty of conducting their own evaluations and tests. Because the products are subject to continual improvement, we reserve the right to amend the product specifications contained in this catalogue.

BUCHER hydraulics

WWW.SUMY.IR

Directional valve 2-way/2-position

Q_{max} = 60 l/min, p_{max} = 315 bar
direct acting, poppet type, switching solenoid
Type series: WSDI22G-8X-_-A...

- Screw-in cartridge valve
- For cavity AX/C1020
- All external parts with zinc-nickel plating according to DIN EN ISO 19598
- Installation in threaded port body type GAX-12
- Reliable switching, even after long dwell times
- Low head loss
- Optional with manual override
- De-energized closed
- The slip-on coil can be rotated, and it can be replaced without opening the hydraulic envelope
- High pressure wet-armature solenoids
- Various plug-connector systems and voltages are available

Description

These 2-way/2-position solenoid operated directional seat valves, series WSDI22G..., are NG 8 / SAE 10, direct acting, pressure balanced screwin valves with a 7/8-14 UNF mounting thread. They are designed on the poppet/seat principle, and leak-free in both directions (bidirectional seat-valve shutoff). The straightforward design delivers a good price/performance ratio and outstanding headloss/flow ratings. All external parts of the screw-in valves are zinc-nickel plated and are thus suitable for use in the harshest operating environments. The slip-on coils can be replaced without opening the hydraulic envelope and can be positioned at any angle through 360°. These valves are used in mobile and industrial applications where leaktight shutoff functions are crucially important. Examples are where loads, tensions, or clamping forces must be held without leakage. For self-assembly, please refer to the section related data sheets.

Symbol

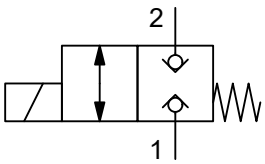

Technical data

General characteristics	Description, value, unit
Function group	Directional valve
Function	2-way/2-position
Design	Screw-in cartridge valve
Controls	switching solenoid
Characteristic	direct acting, poppet type
MTTFd value	150 years
Construction size	NG 8 / SAE 10
Thread size	7/8-14 UNF-2A
Mounting attitude	unrestricted
Weight	0.71 kg
Cavity acc. factory standard	For cavity AX/C1020
Tightening torque steel	80 Nm
Tightening torque aluminium	80 Nm
Tightening torque tolerance	± 10 %
Minimum ambient temperature	- 30 °C
Maximum ambient temperature	+ 50 °C
Surface protection	All external parts with zinc-nickel plating according to DIN EN ISO 19598
Sealing material	see ordering code
Seal kit order number	NBR: DS-522-N / FKM: DS-522-V

Hydraulic characteristics	Description, value, unit
Maximum operating pressure	315 bar
Maximum flow rate	60 l/min
Flow direction	see symbol
Hydraulic fluid	HL and HLP mineral oil according to DIN 51 524; other fluids on request!
Minimum fluid temperature	- 30 °C
Maximum fluid temperature	+ 80 °C
Viscosity range	10 ... 500 mm^2/s (cSt)
Recommended viscosity range	15 ... 250 mm^2/s (cSt)
Minimum fluid cleanliness (cleanlineless class according to ISO 4406:1999)	class 20/18/15

Electric characteristics	Description, value, unit
Actuator type	solenoid coil
Solenoid coils type	D45/207
Supply voltage DC	12/24 V DC
Supply voltage AC	115/230 (50 ... 60 Hz) V AC
Supply voltage tolerance	± 10 %
Nominal power consumption	V DC = 30...32 W / V AC = 31...32 W

WWW.SUMY.IR

Electric characteristics	Description, value, unit
Switching time	Switching time measured at: UN; Δp = 250 bar; Q = 48 l/min; TAmbient = 20 °C; ϑ = 46 mm2/s) / 1 to 2: 31 ms (energizing) 160 ms (de-energizing) / 2 to 1: 49 ms (energizing) 120 ms (de-energizing)
Relative duty cycle	100 %
Electrical connection coil	several connection types available, see ordering code
Protection class solenoid coil to ISO 20 653 / EN 60 529	several classes of protection available, see ordering code (with appropriate mating connector and proper fitting and sealing)

NOTE!
The switching time can be strongly dependent on flow rate, pressure, oil viscosity and the dwell time under pressure. In practice, the switching time may therefore deviate from the specified value range.

Performance graphs

measured with oil viscosity 33.0 mm²/s (cSt), coil at steady-state temperature and 10 % undervoltage

p = f (Q) Pressure-flow rate

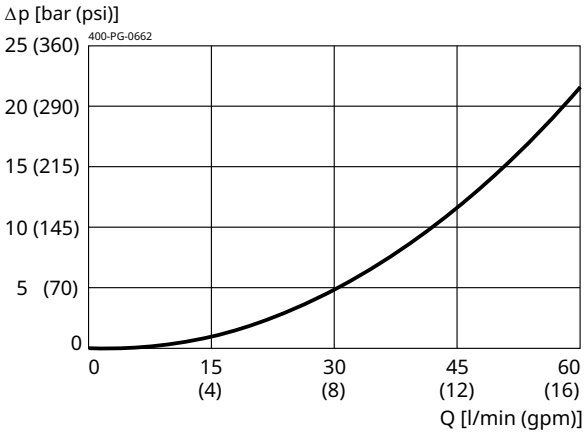

p = f (Q) Performance limit

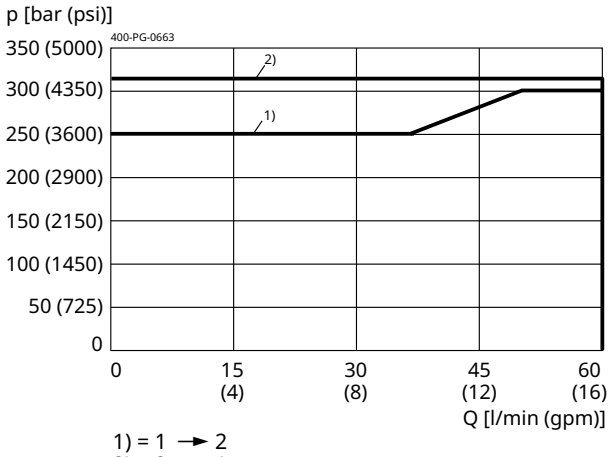

1) = 1 → 2
2) = 2 → 1

Dimensions and sectional view

Beispiel für die Masseinheit: Exampel for the dimensional units:		
0.79	= 0.79 mm	millimeter
(.031)	= 0.031"	inch

Ohne Handnotbetaetigung "O"
without manual override "O"

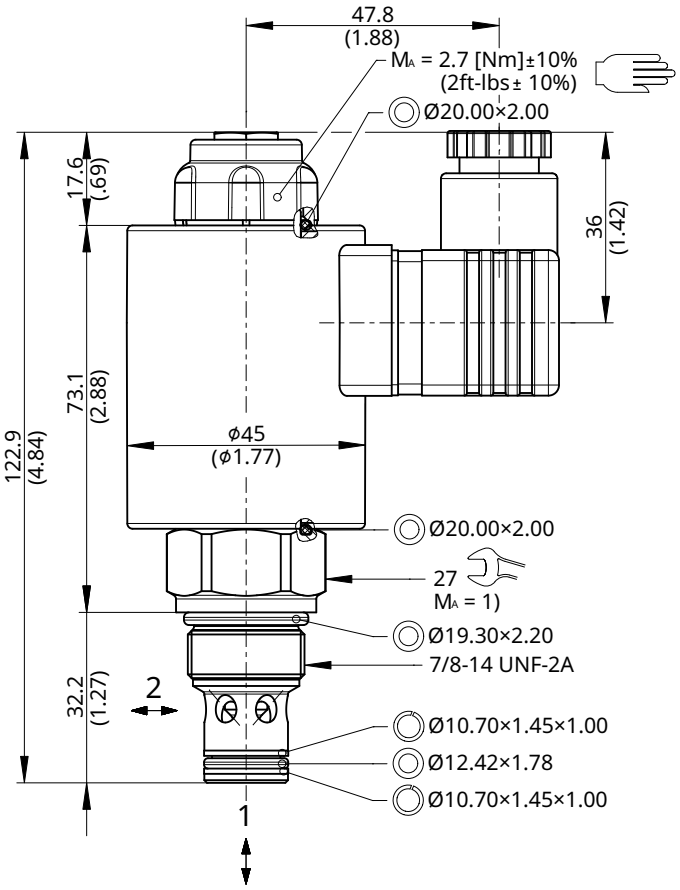

Mit Handnotbetaetigung "P"
with manual override "P"

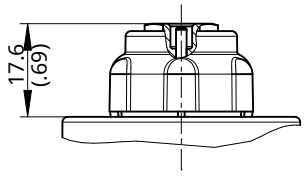

Mit Handnotbetaetigung schraubbar "S"
with screw-in manual override "S"

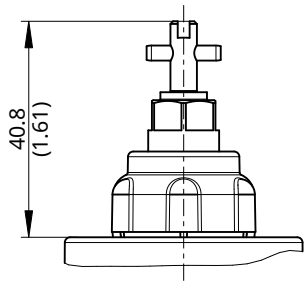

Installation information

IMPORTANT!
1) When fitting the screw-in cartridge valve, use the specified tightening torque. The value can be found in the chapter "Technical data".

ATTENTION!
Only qualified personnel with mechanical skills may carry out any maintenance work. Generally, the only work that should ever be undertaken is to check, and possibly replace, the seals. When changing seals, oil or grease the new seals thoroughly before fitting them.

NOTE!
The seals are not available individually. The seal kit order number can be found in the chapter "Technical data".

Ordering code

Ex. W S D I 22 G - 8 X - O - N A 2 24 D _

W	=	directional valve			
S	=	seat valve			
D	=	direct acting			
I	=	electrically operated, D45/207, 30...32 W			
22	=	2-way/2-position function			
G	=	de-energized closed			
8	=	nominal size 8 / SAE 10			
X	=	cavity type AX/C1020			
O	=	without manual override **(standard)**			
P	=	with manual override			
S	=	with screwable manual override			
N	=	NBR (nitril-butadien-rubber / BUNA) seals **(standard)**			
V	=	FKM (fluorocarbon rubber / VITON) seals (special seals on request)			
A ... Q	=	standard model according to valid data sheet			
Z ... R	=	special model (on request)			
1 ... 9	=	technical design no. (omit by ordering)			
...	=	voltage e.g. 24 (24 V)			
D	=	current DC			
A	=	current AC			
(blank)	=	DIN EN 175301-803 connection	3-pole 2 P+E **(standard)**	(IP 65)	with mating plug
M100	=	DIN EN 175301-803 connection	3-pole 2 P+E	(IP 65)	mating plug not supplied
JT	=	Junior Timer plug connection	2-pole radial, with protection diode	(IP 65)	mating plug not supplied
D	=	Deutsch plug connection DT04-2P	2-pole 45°	(IP 67/69K)	mating plug not supplied
DT	=	Deutsch plug connection DT04-2P	2-pole 45°, with protection diode	(IP 67/69K)	mating plug not supplied
		other plug-variants, please consult BUCHER.			

IMPORTANT!
Not every combination of voltage values, current type and plug connections available.

Related data sheets

Reference	Description
400-P-040011	Form tools
400-P-120120	Solenoid coil D45/207
400-P-040261	Cavity AX/C1020
400-P-738101	Threaded port body GAX-12-...
400-P-010101	MTTFd Values for Hydraulic Valves

info.ch@bucherhydraulics.com **www.bucherhydraulics.com**

© 2025 by Bucher Hydraulics AG Frutigen, 3714 Frutigen, Switzerland

All rights reserved.
Data is provided for the purpose of product description only, and must not be construed as warranted characteristics in the legal sense. The information does not relieve users from the duty of conducting their own evaluations and tests. Because the products are subject to continual improvement, we reserve the right to amend the product specifications contained in this catalogue.

BUCHER hydraulics
WWW.SUMY.IR

Directional valve 2-way/2-position

Q_{max} = 30 l/min, p_{max} = 250 bar
direct acting, poppet type, switching solenoid with emergency override
Type series: WS22GNA5...

- Screw-in cartridge valve
- For cavity AL
- All external parts with zinc-nickel plating according to DIN EN ISO 19598
- Installation in threaded port body type GALA
- With bidirectional seat-valve shut-off
- High flow rates
- Compact construction
- Low head loss
- De-energized closed
- The slip-on coil can be rotated, and it can be replaced without opening the hydraulic envelope
- High pressure wet-armature solenoids
- Various plug-connector systems and voltages are available

Description

The 2-way/2-position solenoid-operated directional valves, series WS22..., are size 5, direct acting poppet type screw-in valves with a 3/4-16-UNF mounting thread. They are designed on the poppet/seat principle, and are therefore virtually leak-free in both directions of flow (bidirectional seat-valve shut-off). All external parts of the screw-in valves are zinc-nickel plated and are thus suitable for use in the harshest operating environments. The slip-on coils can be replaced without opening the hydraulic envelope and can be positioned at any angle through 360°. These screw-in valves are predominantly used in certain mobile and industrial applications where leak-tight shut-off functions are crucially important. Examples are where loads, tensions, or clamping forces must be held without leakage. For self-assembly, please refer to the section related data sheets.

Symbol

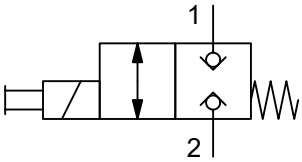

WWW.SUMY.IR

Technical data

General characteristics	Description, value, unit
Function group	Directional valve
Function	2-way/2-position
Design	Screw-in cartridge valve
Controls	switching solenoid with emergency override
Characteristic	direct acting, poppet type
MTTFd value	150 years
Construction size	NG 5
Thread size	3/4-16 UNF-2A
Mounting attitude	unrestricted
Weight	0.35 kg
Cavity acc. factory standard	For cavity AL
Tightening torque steel	50 Nm
Tightening torque aluminium	50 Nm
Tightening torque tolerance	± 10 %
Minimum ambient temperature	- 30 °C
Maximum ambient temperature	+ 50 °C
Surface protection	All external parts with zinc-nickel plating according to DIN EN ISO 19598
Sealing material	see ordering code
Seal kit order number	NBR: DS-246-N / FKM-DS-246-V

Hydraulic characteristics	Description, value, unit
Maximum operating pressure	250 bar
Maximum flow rate	30 l/min
Flow direction	see symbol
Hydraulic fluid	HL and HLP mineral oil according to DIN 51 524; other fluids on request!
Minimum fluid temperature	- 30 °C
Maximum fluid temperature	+ 80 °C
Viscosity range	10 ... 500 mm^2/s (cSt)
Recommended viscosity range	15 ... 250 mm^2/s (cSt)
Minimum fluid cleanliness (cleanlineless class according to ISO 4406:1999)	class 20/18/15

Electric characteristics	Description, value, unit
Actuator type	solenoid coil
Solenoid coils type	D36
Supply voltage DC	12/24 V DC
Supply voltage AC	115/230 (50 ... 60 Hz) V AC
Supply voltage tolerance	± 10 %
Nominal power consumption	VAC: 25, VDC: 27 W
Switching time	30...120 ms (energizing), 20...50 ms (de-energized)
Relative duty cycle	100 %

WWW.SUMY.IR

Electric characteristics	Description, value, unit
Electrical connection coil	several connection types available, see ordering code
Protection class solenoid coil to ISO 20 653 / EN 60 529	IP 65 / IP 67 / IP 69K, see “Ordering code” (with appropriate mating connector and proper fitting and sealing)

NOTE!
The switching time can be strongly influenced by flow rate, pressure, viscosity, and the dwell period under pressure. In practice, the switching time may therefore deviate from the specified value range.

Performance graphs

measured with oil viscosity 33.0 mm²/s (cSt), coil at steady-state temperature and 10 % undervoltage

p = f (Q) Performance limit

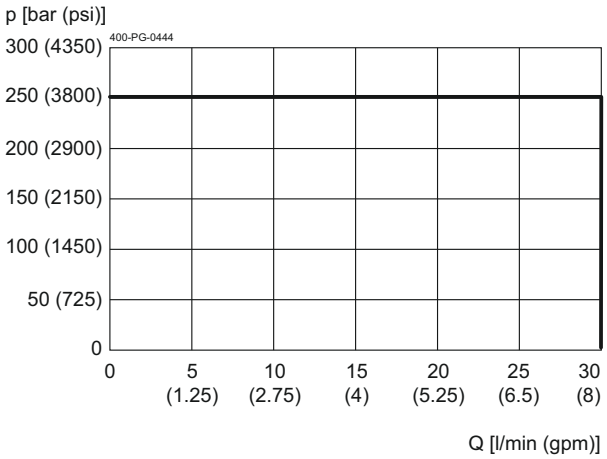

Δp = f (Q) Pressure drop-flow rate characteristic

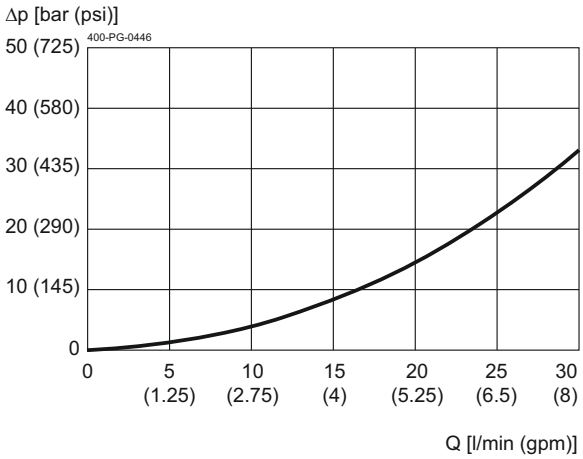

Dimensions and sectional view

Beispiel für die Masseinheit:
Example for the dimensional units:

0.79 = 0.79 mm millimeter
(.031) = 0.031" inch

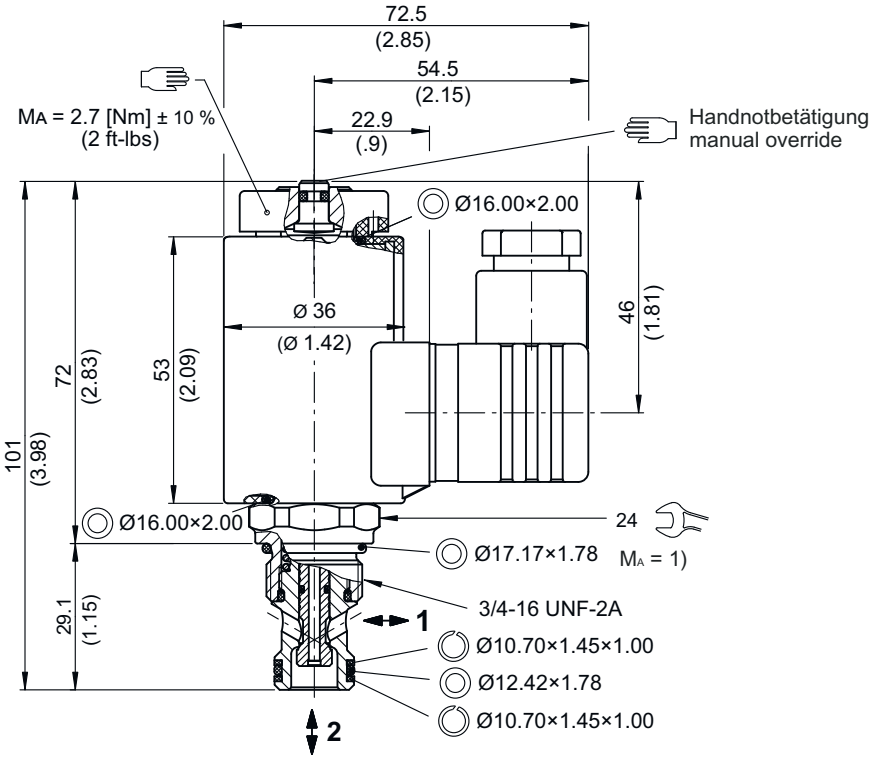

Installation information

ATTENTION!
Only qualified personnel with mechanical skills may carry out any maintenance work. Generally, the only work that should ever be undertaken is to check, and possibly replace, the seals. When changing seals, oil or grease the new seals thoroughly before fitting them.

IMPORTANT!
1) When fitting the screw-in cartridge valve, use the specified tightening torque. The value can be found in the chapter "Technical data".

Ordering code

Ex. D S 22G N A 5 N - 5 24 D _

W	=	Wegventil / Directional valve
S	=	Sitzventil, direkt gesteuert / Seat valve, directly operated
22G	=	2-Wege-2-Stellungsfunktion, stromlos geschlossen / 2-way/2-position function, normally closed
N	=	Elektrisch betätigt, 12 VDC / 24 VDC / 110 VAC / 230 VAC / Electrically operated, 12 VDC / 24 VDC / 110 VAC / 230 VAC
A	=	Standard-Ausführung mit Gewindeanschluss / Standard version with threaded connection ISO 4401-03-02-0-05 / NFPA D03 / ANF-2A
5	=	Nennweite 5 / Nominal size 5
N	=	NBR (Nitril-Butadien-Kautschuk) / NBR (Nitrile Butadiene Rubber) (Standard) / (Standard)
V	=	FKM (Fluor-Kautschuk) / FKM (Fluoro-Carbon Rubber)
		(Spezialausführungen auf Anfrage) / (Special versions on request)
1 ... 9	=	Technische Stand (bei Bestellung weglassen) / Technical Standard (omit when ordering)
...	=	Spannungsart / Voltage 24 (24 V) / 24 (24 V)
D	=	Strom / Current DC
A	=	Strom / Current AC
(blank)	=	DIN EN 175301-803 Anschluss / Connection 3-polig + PE / 3-pole + PE (Standard) (IP 65) mit Gegenstecker / with mating plug
T	=	DIN EN 175301-803 Anschluss / Connection 3-polig + PE, mit Schutzdiode / 3-pole + PE, with protection diode (IP 65) mit Gegenstecker / with mating plug
M100	=	DIN EN 175301-803 Anschluss / Connection 3-polig + PE / 3-pole + PE (IP 65)
J	=	Junior-Timer-Stecker-Anschluss / Junior-Timer-plug-connection 2-polig radial / 2-pole radial (IP 65)
JT	=	Junior-Timer-Stecker-Anschluss / Junior-Timer-plug-connection 2-polig radial, mit Schutzdiode / 2-pole radial, with protection diode (IP 65)
I	=	Junior-Timer-Stecker-Anschluss / Junior-Timer-plug-connection 2-polig axial / 2-pole axial (IP 65)
IT	=	Junior-Timer-Stecker-Anschluss / Junior-Timer-plug-connection 2-polig axial, mit Schutzdiode / 2-pole axial, with protection diode (IP 65)
D	=	Deutsch-Stecker-Anschluss DT04-2P / Deutsch-plug-connection DT04-2P 2-polig 45° / 2-pole 45° (IP 67/69K)
DT	=	Deutsch-Stecker-Anschluss DT04-2P / Deutsch-plug-connection DT04-2P 2-polig 45°, mit Schutzdiode / 2-pole 45°, with protection diode (IP 67/69K)
		Weitere Steckeranschlüsse / Variant connections on request.
		W
		W
		W
		W

mating plug / Gegenstecker

WICHTIG!
Nicht jede Kombination von Spannungen, Strom und Steckeranschlüssen ist verfügbar. / **IMPORTANT!**
Not every combination of voltage values, current, type and plug connection is available.

Related data sheets

Reference	Description
400-P-040011	Form tools
400-P-120110	Solenoid coil D36
400-P-040171	Cavity AL
400-P-720101	Threaded port body GALA
400-P-010101	MTTFd Values for Hydraulic Valves

info.ch@bucherhydraulics.com **www.bucherhydraulics.com**

© 2024 by Bucher Hydraulics AG Frutigen, 3714 Frutigen, Switzerland

All rights reserved.
Data is provided for the purpose of product description only, and must not be construed as warranted characteristics in the legal sense. The information does not relieve users from the duty of conducting their own evaluations and tests. Because the products are subject to continual improvement, we reserve the right to amend the product specifications contained in this catalogue.

BUCHER hydraulics

WWW.SUMY.IR

Directional valve 2-way/2-position

Q_{max} = 30 l/min, p_{max} = 250 bar
direct acting, poppet type, switching solenoid with emergency override
Type series: WS22GNZ5...

- Screw-in cartridge valve
- For cavity ALM
- All external parts with zinc-nickel plating according to DIN EN ISO 19598
- Installation in threaded port body type GALMA
- With bidirectional seat-valve shut-off
- Low head loss
- High flow rates
- Compact construction
- De-energized closed
- The slip-on coil can be rotated, and it can be replaced without opening the hydraulic envelope
- High pressure wet-armature solenoids
- Various plug-connector systems and voltages are available

Description

The 2-way/2-position solenoid-operated directional valves, series WS22..., are size 5, direct acting poppet type screw-in valves with an M20×1.5 mounting thread. They are designed on the poppet/seat principle, and are therefore virtually leak-free in both directions of flow (bidirectional seat-valve shut-off). All external parts of the screw-in valves are zinc-nickel plated and are thus suitable for use in the harshest operating environments. The slip-on coils can be replaced without opening the hydraulic envelope and can be positioned at any angle through 360°. These screw-in valves are predominantly used in certain mobile and industrial applications where leak-tight shut-off functions are crucially important. Examples are where loads, tensions, or clamping forces must be held without leakage. For self-assembly, please refer to the section related data sheets.

Symbol

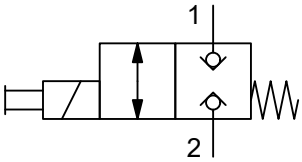

WWW.SUMY.IR

Technical data

General characteristics	Description, value, unit
Function group	Directional valve
Function	2-way/2-position
Design	Screw-in cartridge valve
Controls	switching solenoid with emergency override
Characteristic	direct acting, poppet type
MTTFd value	150 years
Construction size	NG 5
Thread size	M20×1,5
Mounting attitude	unrestricted
Weight	0.35 kg
Cavity acc. factory standard	For cavity ALM
Tightening torque steel	50 Nm
Tightening torque aluminium	50 Nm
Tightening torque tolerance	± 10 %
Minimum ambient temperature	- 30 °C
Maximum ambient temperature	+ 50 °C
Surface protection	All external parts with zinc-nickel plating according to DIN EN ISO 19598
Sealing material	see ordering code
Seal kit order number	NBR: DS-245-N / FKM-DS-245-V

Hydraulic characteristics	Description, value, unit
Maximum operating pressure	250 bar
Maximum flow rate	30 l/min
Flow direction	see symbol
Hydraulic fluid	HL and HLP mineral oil according to DIN 51 524; other fluids on request!
Minimum fluid temperature	- 30 °C
Maximum fluid temperature	+ 80 °C
Viscosity range	10 ... 500 mm^2/s (cSt)
Recommended viscosity range	15 ... 250 mm^2/s (cSt)
Minimum fluid cleanliness (cleanlineless class according to ISO 4406:1999)	class 20/18/15

Electric characteristics	Description, value, unit
Actuator type	solenoid coil
Solenoid coils type	D36
Supply voltage DC	12/24 V DC
Supply voltage AC	115/230 (50 ... 60 Hz) V AC
Supply voltage tolerance	± 10 %
Nominal power consumption	VAC: 25, VDC: 27 W
Switching time	30...120 ms (energizing), 20...50 ms (de-energized)
Relative duty cycle	100 %

WWW.SUMY.IR

Electric characteristics	Description, value, unit
Electrical connection coil	several connection types available, see ordering code
Protection class solenoid coil to ISO 20 653 / EN 60 529	IP 65 / IP 67 / IP 69K, see “Ordering code” (with appropriate mating connector and proper fitting and sealing)

NOTE!
The switching time can be strongly influenced by flow rate, pressure, viscosity, and the dwell period under pressure. In practice, the switching time may therefore deviate from the specified value range.

Performance graphs

measured with oil viscosity 33.0 mm²/s (cSt), coil at steady-state temperature and 10 % undervoltage

p = f (Q) Performance limit

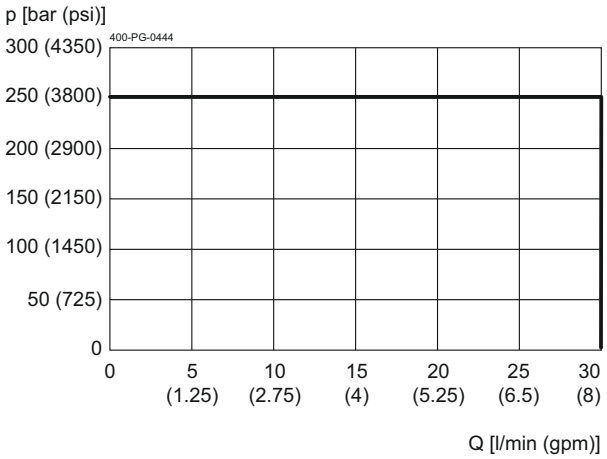

Δp = f (Q) Pressure drop-flow rate characteristic

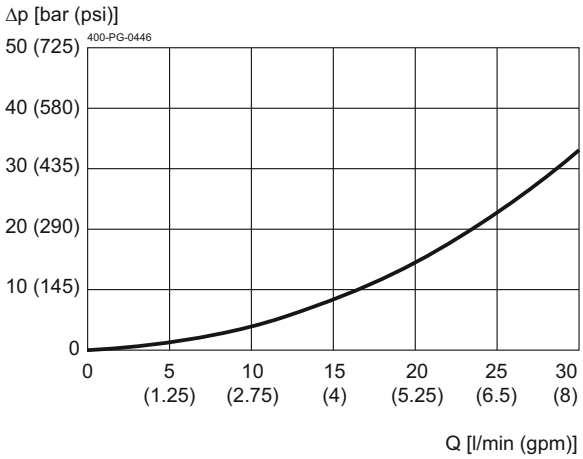

Dimensions and sectional view

Beispiel für die Masseinheit:
Example for the dimensional units:

0.79 = 0.79 mm millimeter
(.031) = 0.031" inch

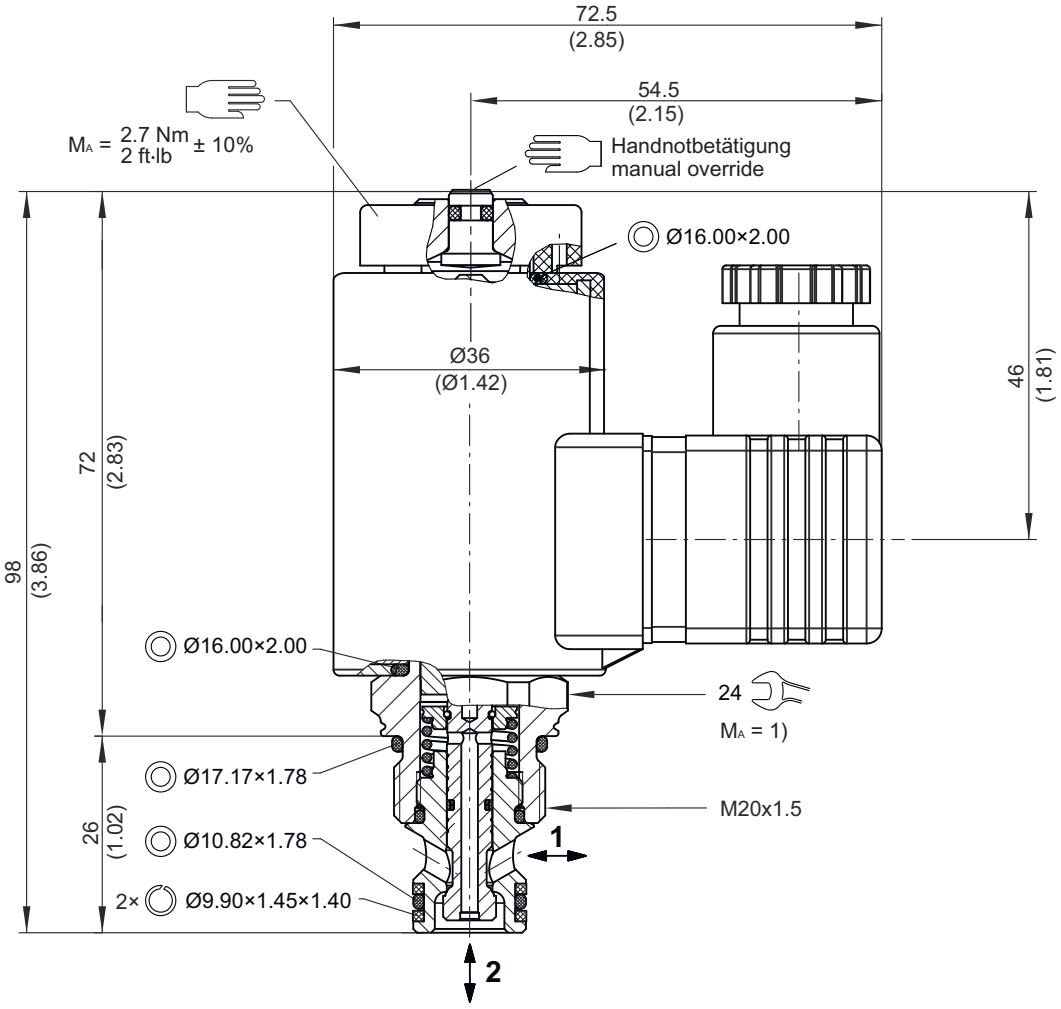

Installation information

ATTENTION!
Only qualified personnel with mechanical skills may carry out any maintenance work. Generally, the only work that should ever be undertaken is to check, and possibly replace, the seals. When changing seals, oil or grease the new seals thoroughly before fitting them.

IMPORTANT!
1) When fitting the screw-in cartridge valve, use the specified tightening torque. The value can be found in the chapter "Technical data".

Ordering code

Ex. D | S | 22G | N | Z | 5 | N - 5 | 24 | D | _

W	=	Wegventil / Directional valve
S	=	Sitzventil, direktgesteuert / Seat valve, directly operated
22G	=	2-Wege-2-Stellungsfunktion, stromlos geschlossen / 2-way 2-position function, normally closed
N	=	elektrisch betätigt, 12 VDC / 27 W, 24 VDC / 27 W, 110 VAC / 25 W, 230 VAC / 25 W / electrically operated, 12 VDC / 27 W, 24 VDC / 27 W, 110 VAC / 25 W, 230 VAC / 25 W
Z	=	Bauartgröße M20 x 1,5 für Bauform ALM / Cavity size M20 x 1.5 for cavity form ALM
5	=	Nennweite 5 / Nominal size 5
N	=	NBR (Nitril-Butadien-Kautschuk, BUNA-N) Dichtungen (Standard) / NBR (Nitrile butadiene rubber, BUNA-N) seals (Standard)
V	=	FKM (Fluor-Kautschuk, VITON) Dichtungen / FKM (Fluoro-rubber, VITON) seals
		(Spezialausführungen auf Anfrage) / (Special versions on request)
1 ... 9	=	technische Stand (ein Buchstabe wird weggelassen) / Technical design (one letter is omitted)
...	=	Spannungswert (24 V) / Voltage value (24 V)
D	=	Strom DC / Current DC
A	=	Strom AC / Current AC
(blank)	=	DIN EN 175301-803 Anschluss / connection 3-polig 2P+E (Standard) / 3-pole 2P+E (Standard) (IP 65) mit Gegenstecker / with mating plug
T	=	DIN EN 175301-803 Anschluss / connection 3-polig 2P+E, mit Schutzdiode / 3-pole 2P+E, with protection diode (IP 65) mit Gegenstecker / with mating plug
M100	=	DIN EN 175301-803 Anschluss / connection 3-polig 2P+E / 3-pole 2P+E (IP 65) ohne Gegenstecker / without mating plug
J	=	Junior-Timer-Stecker-Anschluss / Junior-Timer-plug-connection 2-polig radial / 2-pole radial (IP 65)
JT	=	Junior-Timer-Stecker-Anschluss / Junior-Timer-plug-connection 2-polig radial, mit Schutzdiode / 2-pole radial, with protection diode (IP 65)
I	=	Junior-Timer-Stecker-Anschluss / Junior-Timer-plug-connection 2-polig axial / 2-pole axial (IP 65)
IT	=	Junior-Timer-Stecker-Anschluss / Junior-Timer-plug-connection 2-polig axial, mit Schutzdiode / 2-pole axial, with protection diode (IP 65)
D	=	Deutsch-Stecker-Anschluss / Deutsch-plug-connection DT04-2P 2-polig 45° / 2-pole 45° (IP 67/69K)
DT	=	Deutsch-Stecker-Anschluss / Deutsch-plug-connection DT04-2P 2-polig 45°, mit Schutzdiode / 2-pole 45°, with protection diode (IP 67/69K)
		Weitere Steckeranschlüsse Varianten auf Anfrage. / Other plug-connection versions on request.
		W
		W
		W
		W

WICHTIG!
Nicht jede Kombination von Spannungswerten, Strom art und Stecker Anschlussvarianten erhältlich.
IMPORTANT!
Not every combination of voltage values, current type and plug connection variants available.

Related data sheets

Reference	Description
400-P-040011	Form tools
400-P-120110	Solenoid coil D36
400-P-040201	Cavity ALM
400-P-720105	Threaded port body GALMA
400-P-010101	MTTFd Values for Hydraulic Valves

info.ch@bucherhydraulics.com **www.bucherhydraulics.com**

© 2024 by Bucher Hydraulics AG Frutigen, 3714 Frutigen, Switzerland

All rights reserved.
Data is provided for the purpose of product description only, and must not be construed as warranted characteristics in the legal sense. The information does not relieve users from the duty of conducting their own evaluations and tests. Because the products are subject to continual improvement, we reserve the right to amend the product specifications contained in this catalogue.

WWW.SUMY.IR

Directional valve 2-way/2-position

Q_{max} = 20 l/min, p_{max} = 250 bar
Direct acting, poppet type, switching solenoid with emergency override
Type series: WSDF22G-5LM-...A...

- Screw-in cartridge valve for cavity ALM
- All external parts with zinc-nickel plating according to DIN EN ISO 19598
- Installation in threaded port body type GALMA
- With bidirectional seat-valve shut-off
- Compact construction
- The slip-on coil can be rotated, and it can be replaced without opening the hydraulic envelope

Symbol

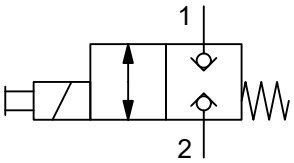

Description

The 2-way/2-position solenoid valve is a size 05 direct-acting cartridge valve with bidirectional seat-valve shut-off. The valve is designed on the poppet/seat principle and virtually leak-free in both directions when de-energized. When the valve is energized, free flow is possible in both directions. The valve is predominantly used in mobile and industrial applications where leak-tight shut-off functions, like loads, tensions or clamping, are crucially important. The solenoid coil with the required connector type is not included and must be ordered separately (see "Related data sheets"). The slip-on coil can be replaced without opening the hydraulic circuit and can be positioned at any angle through 360°.

Technical data

General characteristics	Description, value, unit
Function group	directional valve
Function	2-way/2-position
Design	screw-in cartridge valve
Controls	switching solenoid with emergency override
Characteristic	direct acting, poppet type
MTTFd value	150 years
Construction size	NG 05
Thread size	M20×1,5
Mounting attitude	unrestricted
Weight	0.2 kg
Cavity acc. factory standard	ALM
Tightening torque steel	50 Nm
Tightening torque aluminium	50 Nm
Tightening torque tolerance	± 10 %
Minimum ambient temperature	- 30 °C
Maximum ambient temperature	+ 90 °C
Surface protection	all external parts with zinc-nickel plating according to DIN EN ISO 19598
Sealing material	see ordering code
Seal kit order number	NBR: DS-552-N / FKM-DS-552-V

Hydraulic characteristics	Description, value, unit
Maximum operating pressure	250 bar
Maximum flow rate	20 l/min
Flow direction	see symbol
Hydraulic fluid	HL and HLP mineral oil according to DIN 51 524; other fluids on request!
Minimum fluid temperature	- 30 °C
Maximum fluid temperature	+ 80 °C
Viscosity range	10 ... 500 mm^2/s (cSt)
Recommended viscosity range	15 ... 250 mm^2/s (cSt)
Minimum fluid cleanliness (cleanliness class according to ISO 4406:1999)	class 20/18/15

Electric characteristics	Description, value, unit
Actuator type	solenoid coil
Solenoid coils type	D30-131
Supply voltage tolerance	see "performance graphs" duty cycle solenoid coil
Nominal power consumption	VDC: 20 W
Switching time	Switching time measured at: UN; Δp = 200 bar; Q = 16 l/min; T amb = 20 °C; ϑ = 46 mm2/s; 1 to 2: 35 ms (energizing) / 25 ms (de-energizing) 2 to 1: 25 ms (energizing) / 20 ms (de-energizing)
Relative duty cycle	100 %

NOTE!
The switching time is in practice strongly influenced by the dwell period under pressure, flow rate, pressure, and oil viscosity, and may differ from the specified values.

Performance graphs

measured with oil viscosity 33.0 mm²/s (cSt), coil at steady-state temperature and 10 % undervoltage

Δp = f (Q) Pressure drop-flow rate characteristic

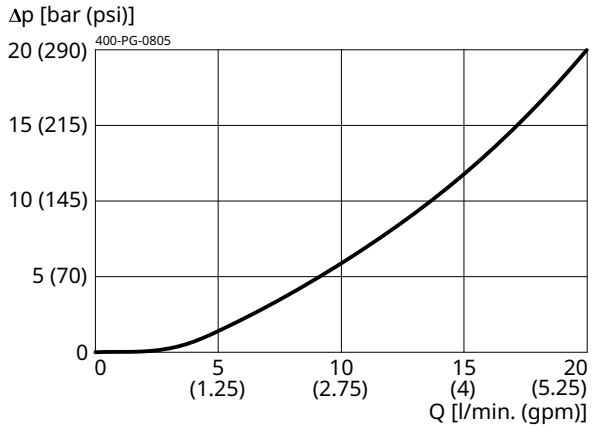

DC_{max}/U_{min}(100%DC) = f (T amb) Duty cycle solenoid coil

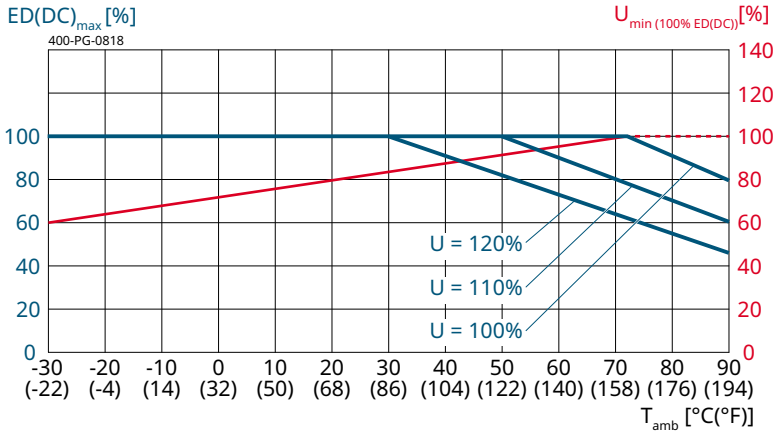

Installation

Beispiel für die Masseinheit:
Example for the dimensional units:

0.79	= 0.79 mm	millimeter
(.031)	= 0.031"	inch

Handnotbetaetigung "P"
manual override "P"

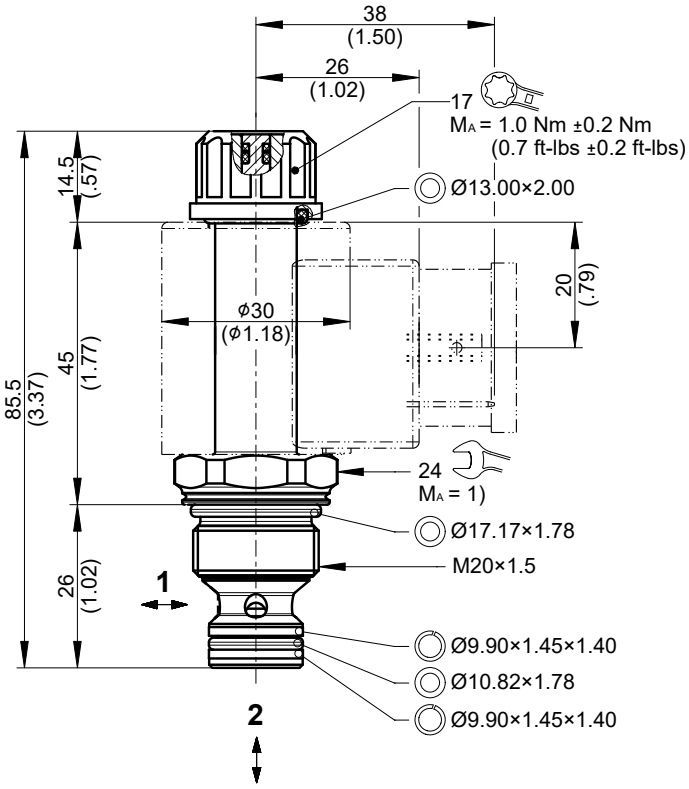

Handnotbetaetigung schraubbar "S"
screw-in manual override "S"

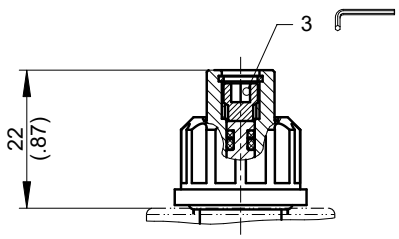

ATTENTION!
Only qualified personnel with mechanical skills may carry out any maintenance work on the valve. The qualified personnel may only replace or inspect the seals. New seals must always be oiled or greased before installation.

IMPORTANT!
1) When fitting the valves, use the specified tightening torque (see "Technical Data").

Additional symbols

WSDF22G-5LM-S-O-...

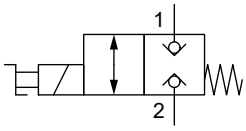

Ordering code

Ex. W S D F 22 G - 5 LM - P - N A 1

W	=	directional valve
S	=	bidirectional seat-valve shut-off, seated design
D	=	direct acting
F	=	electrically operated, COIL D30-131-37..., 20 W
22	=	2-way/2-position function
G	=	de-energized closed
5	=	nominal size 05
LM	=	cavity type ALM
P	=	manual override **(standard)**
S	=	screwable manual override
N	=	NBR (nitrile butadiene rubber / BUNA) seals **(standard)**
V	=	FKM (fluorocarbon rubber / VITON) seals (special seals on request)
A ... Q	=	standard model according to valid data sheet
1 ... 9	=	technical design no. (omit when ordering)

IMPORTANT!
The solenoid coil with the required connector type is not included and must be ordered separately (see "Related data sheets").

Related data sheets

Reference	Description
400-P-040011	form tools
400-P-120140	solenoid coil COIL D30-131...
400-P-040201	cavity ALM
400-P-720105	threaded port body GALMA
400-P-010101	MTTFd Values for Hydraulic Valves

info.ch@bucherhydraulics.com **www.bucherhydraulics.com**

© 2026 by Bucher Hydraulics AG Frutigen, 3714 Frutigen, Switzerland

All rights reserved.
Data is provided for the purpose of product description only, and must not be construed as warranted characteristics in the legal sense. The information does not relieve users from the duty of conducting their own evaluations and tests. Because the products are subject to continual improvement, we reserve the right to amend the product specifications contained in this catalogue.

WWW.SUMY.IR

Directional valve 2-way/2-position

Q_{max} = 20 l/min, p_{max} = 250 bar
Direct acting, poppet type, switching solenoid with emergency override
Type series: WSDF22G-5H-...A...

- Screw-in cartridge valve for cavity BH/C0820
- All external parts with zinc-nickel plating according to DIN EN ISO 19598
- Installation in threaded port body type GBH-38
- With bidirectional seat-valve shut-off
- Compact construction
- The slip-on coil can be rotated, and it can be replaced without opening the hydraulic envelope

Symbol

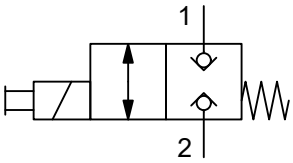

Description

The 2-way/2-position solenoid valve is a size 05 / SAE 08 direct-acting cartridge valve with bidirectional seat-valve shut-off. The valve is designed on the poppet/seat principle and virtually leak-free in both directions when de-energized. When the valve is energized, free flow is possible in both directions. The valve is predominantly used in mobile and industrial applications where leak-tight shut-off functions, like loads, tensions or clamping, are crucially important. The solenoid coil with the required connector type is not included and must be ordered separately (see "Related data sheets"). The slip-on coil can be replaced without opening the hydraulic circuit and can be positioned at any angle through 360°.

Technical data

General characteristics	Description, value, unit
Function group	directional valve
Function	2-way/2-position
Design	screw-in cartridge valve
Controls	switching solenoid with emergency override
Characteristic	direct acting, poppet type
MTTFd value	150 years
Construction size	NG 05 / SAE 08
Thread size	3/4-16 UNF-2A
Mounting attitude	unrestricted
Weight	0.2 kg
Cavity acc. factory standard	BH/C0820
Tightening torque steel	50 Nm
Tightening torque aluminium	50 Nm
Tightening torque tolerance	± 10 %
Minimum ambient temperature	- 30 °C
Maximum ambient temperature	+ 90 °C
Surface protection	all external parts with zinc-nickel plating according to DIN EN ISO 19598
Sealing material	see ordering code
Seal kit order number	NBR: DS-554-N / FKM-DS-554-V

Hydraulic characteristics	Description, value, unit
Maximum operating pressure	250 bar
Maximum flow rate	20 l/min
Flow direction	see symbol
Hydraulic fluid	HL and HLP mineral oil according to DIN 51 524; other fluids on request!
Minimum fluid temperature	- 30 °C
Maximum fluid temperature	+ 80 °C
Viscosity range	10 ... 500 mm^2/s (cSt)
Recommended viscosity range	15 ... 250 mm^2/s (cSt)
Minimum fluid cleanliness (cleanliness class according to ISO 4406:1999)	class 20/18/15

Electric characteristics	Description, value, unit
Actuator type	solenoid coil
Solenoid coils type	D30-131
Supply voltage tolerance	see "performance graphs" duty cycle solenoid coil
Nominal power consumption	VDC: 20 W
Switching time	Switching time measured at: UN; Δp = 200 bar; Q = 16 l/min; T amb = 20 °C; ϑ = 46 mm2/s; 1 to 2: 35 ms (energizing) / 25 ms (de-energizing) 2 to 1: 25 ms (energizing) / 20 ms (de-energizing)
Relative duty cycle	100 %

NOTE!
The switching time is in practice strongly influenced by the dwell period under pressure, flow rate, pressure, and oil viscosity, and may differ from the specified values.

Performance graphs

measured with oil viscosity 33.0 mm²/s (cSt), coil at steady-state temperature and 10 % undervoltage

Δp = f (Q) Pressure drop-flow rate characteristic

Without filter screen

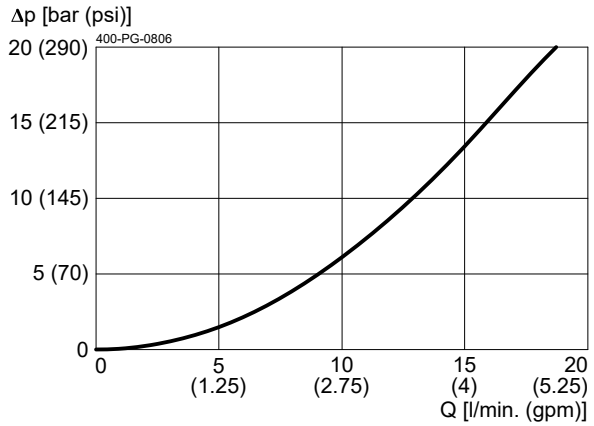

DC_{max}/U_{min}(100%DC) = f (T amb) Duty cycle solenoid coil

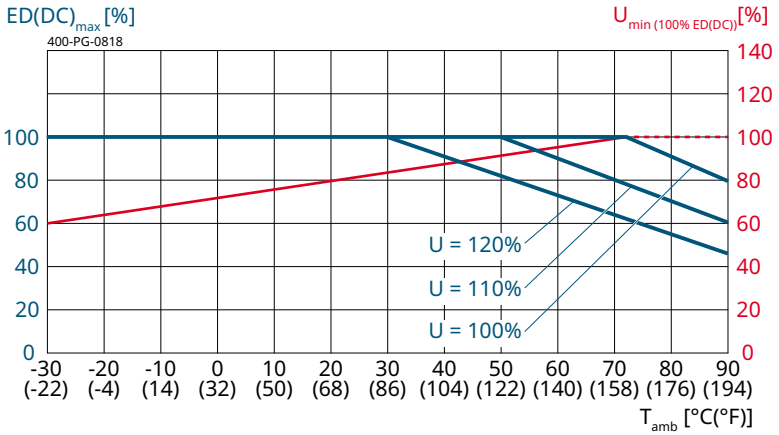

Installation

Beispiel für die Masseinheit:
Example for the dimensional units:

0.79	= 0.79 mm	millimeter
(.031)	= 0.031"	inch

Handnotbetätigung "P"
manual override "P"

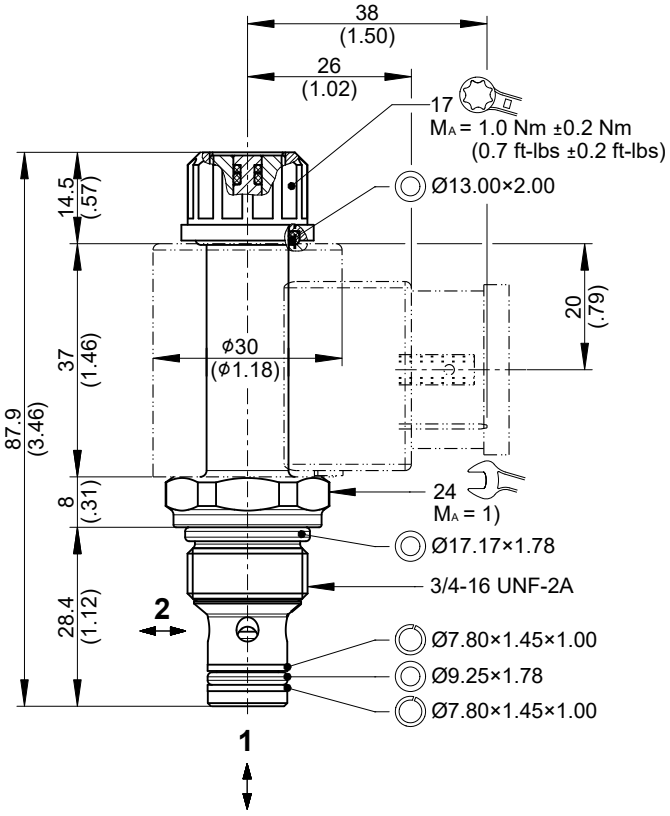

Handnotbetätigung schraubbar "S"
screw-in manual override "S"

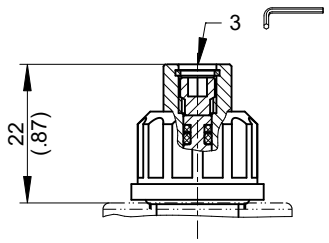

ATTENTION!
Only qualified personnel with mechanical skills may carry out any maintenance work on the valve. The qualified personnel may only replace or inspect the seals. New seals must always be oiled or greased before installation.

IMPORTANT!
1) When fitting the valves, use the specified tightening torque (see "Technical Data").

Additional symbols

WSDF22G-5H-P-F2-...

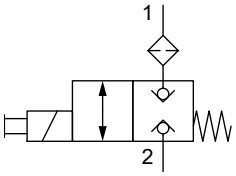

WSDF22G-5H-S-O-...

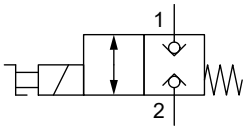

WSDF22G-5H-S-F2-...

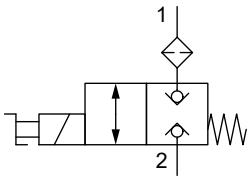

Filter option

The pressure drop of the filter amounts to an additional approx. 2 bar (30 psi) at 20 l/min (5.25 gpm).

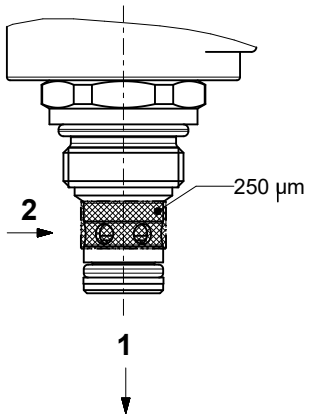

Ordering code

Ex. W S D F 22 G - 5 H - P - O - N A 1

W	=	directional valve
S	=	bidirectional seat-valve shut-off
D	=	direct acting
F	=	electrically operated, COIL D30-131-37..., 20 W
22	=	2-way/2-position function
G	=	de-energized closed
5	=	nominal size 05 / SAE 08
H	=	cavity type BH/C0820
P	=	manual override **(standard)**
S	=	screwable manual override
O	=	without filter screen **(standard)**
F2	=	filter screen in port 2
N	=	NBR (nitrile butadiene rubber / BUNA) seals **(standard)**
V	=	FKM (fluorocarbon rubber / VITON) seals (special seals on request)
A ... Q	=	standard model according to valid data sheet
1 ... 9	=	technical design no. (omit when ordering)

IMPORTANT!
The solenoid coil with the required connector type is not included and must be ordered separately (see "Related data sheets").

Related data sheets

Reference	Description
400-P-040011	form tools
400-P-120140	solenoid coil COIL D30-131...
400-P-040401	cavity BH/C0820
400-P-738571	threaded port body GBH-38...
400-P-010101	MTTFd Values for Hydraulic Valves

info.ch@bucherhydraulics.com **www.bucherhydraulics.com**

© 2026 by Bucher Hydraulics AG Frutigen, 3714 Frutigen, Switzerland

All rights reserved.
Data is provided for the purpose of product description only, and must not be construed as warranted characteristics in the legal sense. The information does not relieve users from the duty of conducting their own evaluations and tests. Because the products are subject to continual improvement, we reserve the right to amend the product specifications contained in this catalogue.

2/2 Cartridge Seat Valve, Size 5

Q_{max} = 30 l/min, p_{max} = 350 bar
Digital valve, bidirectional seat-valve shut-off, direct acting
Series WS22GD…/ WS22OD…

- For use in digital hydraulics
- With bidirectional seat-valve shut-off
- Compact construction for cavity type ALM – M20x1.5
- High switching performance
- Short response times
- All exposed parts with zinc-nickel plating
- High pressure wet-armature solenoids
- The slip-on coil can be rotated, and it can be replaced without opening the hydraulic envelope
- Can be fitted in a line-mounting body

1 Description

These direct acting 2/2 solenoid operated directional seat valves, series WS22GD… / WS22OD…, are screw-in cartridges with a M20x1.5 or 3/4-16 UNF mounting thread. They are designed on the poppet/seat principle, and are therefore virtually leak-free in both directions of flow (bidirectional seat-valve shut-off). Over-excitation, preferably through an electronic switching device (booster), is required to operate the solenoid. Combined with the low mass of the moving parts, this results in short response times and high switching performance in a compact package. "De-energised closed" and "de-energised open" functions are available. The straightforward design delivers an outstanding price/performance ratio. The valves are used in applications in digital hydraulics, where fast response and long life with minimum size are vitally important. All external parts of the cartridge are zinc-nickel plated according to DIN EN ISO 19 598 and are thus suitable for use in the harshest operating environments. The slip-on coils can be replaced without opening the hydraulic envelope and can be positioned at any angle through 360°.

2 Symbol

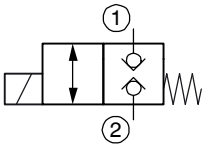

WS22GD…

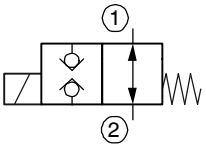

WS22OD…

3 Technical data

General characteristics	Description, value, unit with booster	Description, value, unit without booster
Designation	2/2 cartridge seat valve	
Design	digital valve, bidirectional seat-valve shut-off, direct acting poppet/seat design (pressure balanced)	
Mounting method	screw-in cartridge M20x1.5 or 3/4-16 UNF	
Tightening torque	50 Nm ± 10 %	
Size	nominal size 5, cavity type ALM M20x1.5 cavity type AL 3/4-16 UNF please contact BUCHER	
Weight	0.20 kg	

WWW.SUMY.IR

General characteristics	Description, value, unit with booster	Description, value, unit without booster
Mounting attitude	unrestricted	
Ambient temperature range	-25°C…+80 °C	-25°C…+50 °C

Hydraulic characteristics	Description, value, unit with booster	Description, value, unit without booster
Maximum operating pressure (ports 1 and 2)	350 bar	350 bar
Maximum flow rate	30 l/min	15 l/min (only 1 → 2)
Flow direction	1 → 2 / 2 → 1, see symbols	1 → 2
Hydraulic fluid	HL and HLP mineral oil to DIN 51 524; for other fluids, please contact BUCHER	
Hydraulic fluid temperature range	-25 °C … +80 °C	
Viscosity range	10…500 mm^2/s (cSt), recommended 15...250 mm^2/s (cSt)	
Minimum fluid cleanliness Cleanliness class to ISO 4406 : 1999	class 20/18/15	

Electrical characteristics	Description, value, unit with booster	Description, value, unit without booster
Controlled booster voltage	48 V DC (standard)	-
Booster duration	4…5 ms	-
Holding voltage	12 V DC (standard)	-
Switching voltage with puls duration		24 V DC
Min. puls duration		70 ms
Voltage tolerance	± 5 % (at ambient temperature < 60°C : ± 10 %)	± 10 %
Nominal power consumption	15 W at 12 V DC	15 W at 12 V DC
Switching time - model WS22G…	6 … 20 ms (energising) 10 … 30 ms (deenergising)	10 … 50 ms (energising) 10 … 30 ms (deenergising)
- model WS22O…	6 … 30 ms (energising) 5 … 20 ms (deenergising)	_ … __ ms (energising) _ … __ ms (deenergising)
	These times are strongly influenced by fluid pressure, flow rate and viscosity, as well as by the dwell time under pressure.	
Relative duty cycle - (holding voltage)	100 % (12 V)	see characteristics
Duty cycle / switching frequency - dynamic	see characteristics	see characteristics
Protection class to ISO 20 653 / EN 60 529	IP 65	
Electrical connection:	3-pin plug M8x1	
- PIN 1	48 / 24 / 12 V DC	
- PIN 3	0 V	
- PIN 4	not used	

4 Performance graphs

4.1 Control with booster

measured with oil viscosity 33 mm²/s (cSt), coil at steady-state temperature and 10 % undervoltage

p = f (Q) Performance limits
[WS22GD…]

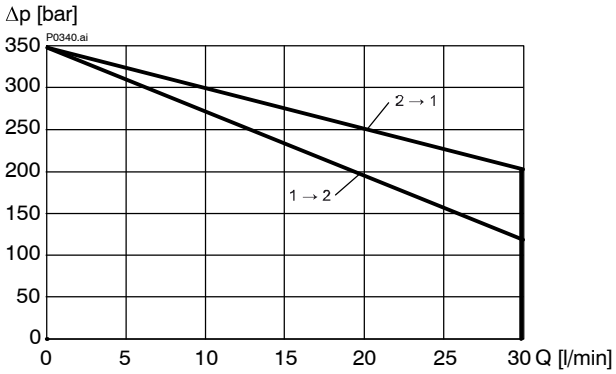

p = f (Q) Performance limits
[WS22OD…]

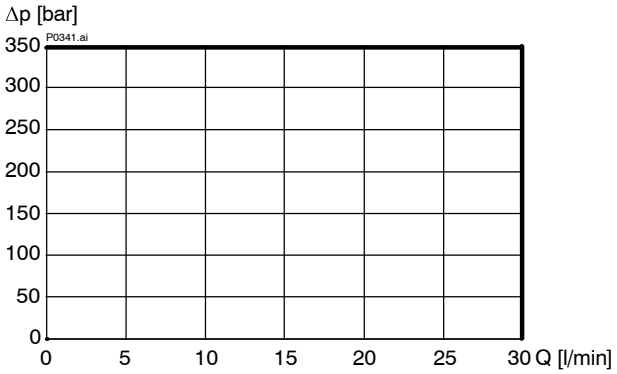

Δp = f (Q) Pressure drop - Flow rate characteristic
[WS22GD…]

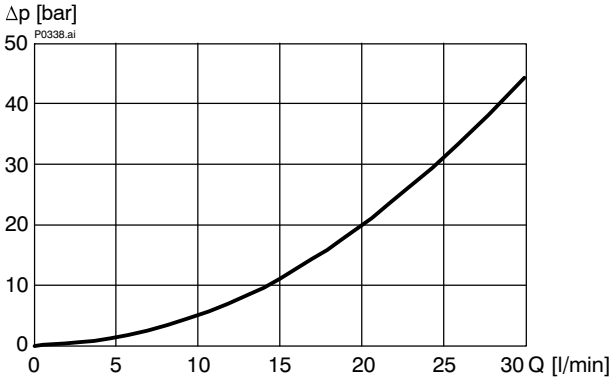

Δp = f (Q) Pressure drop - Flow rate characteristic
[WS22OD…]

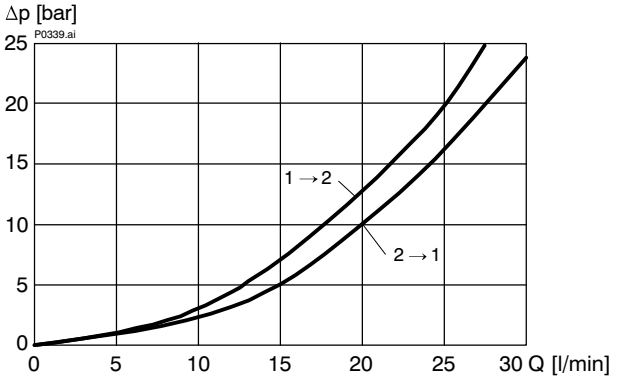

ED = f (f) duty cycle - switching frequency - characteristic [at steady-state coil temperature]

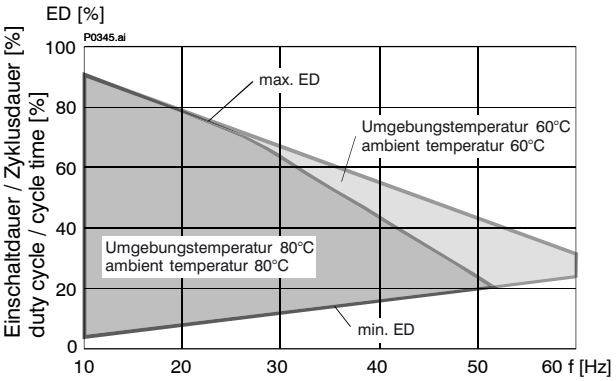

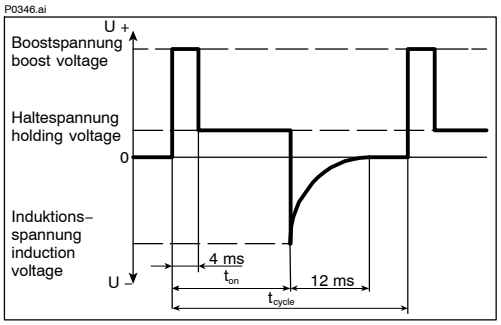

$$ED\ [\%] = \frac{t_{on}}{t_{cycle}} \times 100$$

4.2 Control without booster

measured with oil viscosity 33 mm^2/s (cSt), coil at steady-state temperature and 10 % undervoltage

p = f (Q) Performance limits
[WS22GD…]

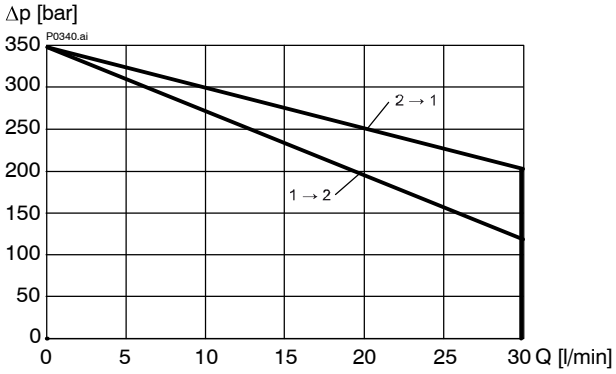

Δp = f (Q) Pressure drop - Flow rate characteristic
[WS22GD…]

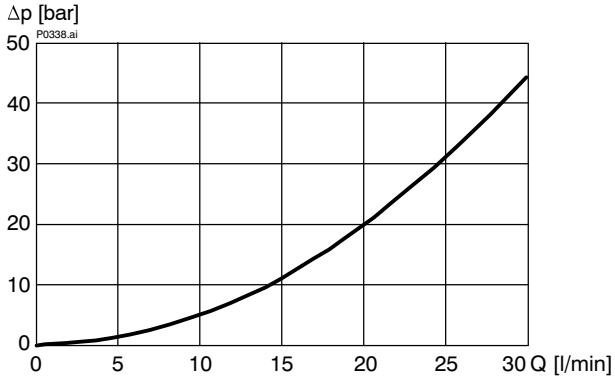

ED = f (f) duty cycle - switching frequency - characteristic [at steady-state coil temperature]

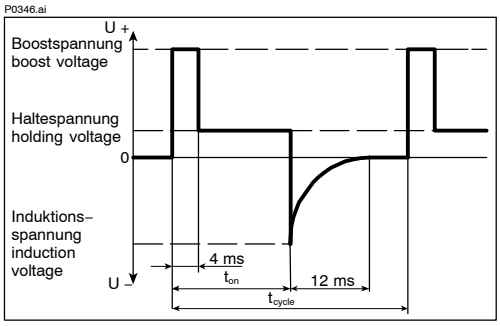

$$ED\ [\%] = \frac{t_{on}}{t_{cycle}} \times 100$$

5 Dimensions & sectional view

5.1 “Normally closed” design WS22GD…

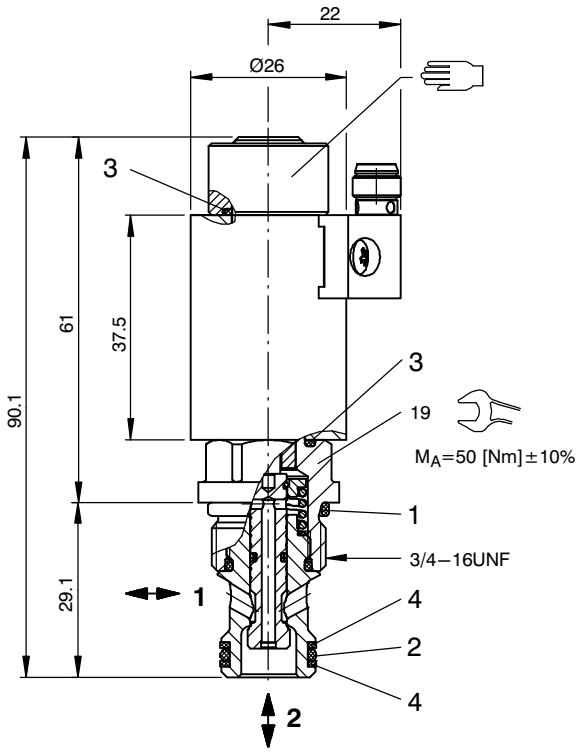

with 3/4-16 UNF thread – cavity type AL
please contact BUCHER

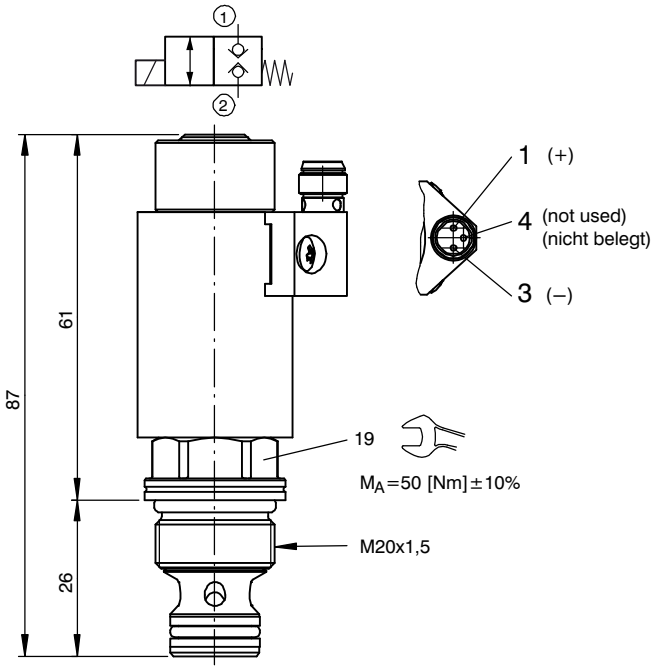

with M20x1.5 thread – cavity type ALM

5.2 “Normally open” design WS22OD…

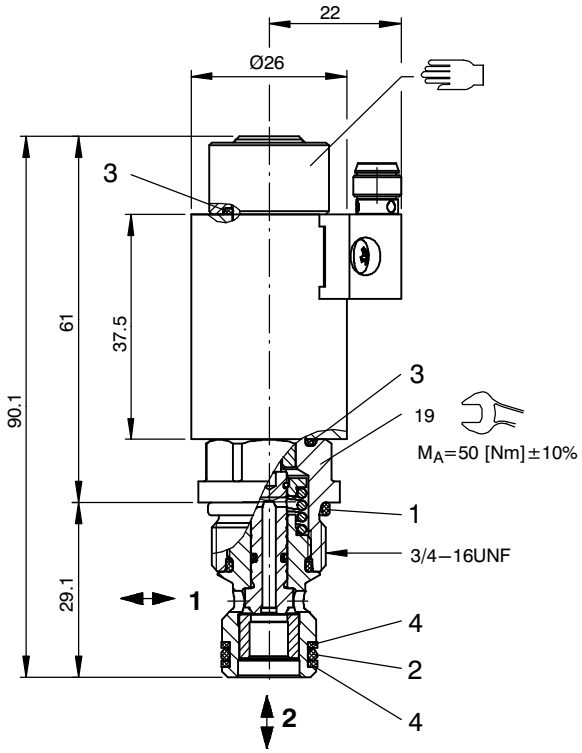

with 3/4-16 UNF thread – cavity type AL
please contact BUCHER

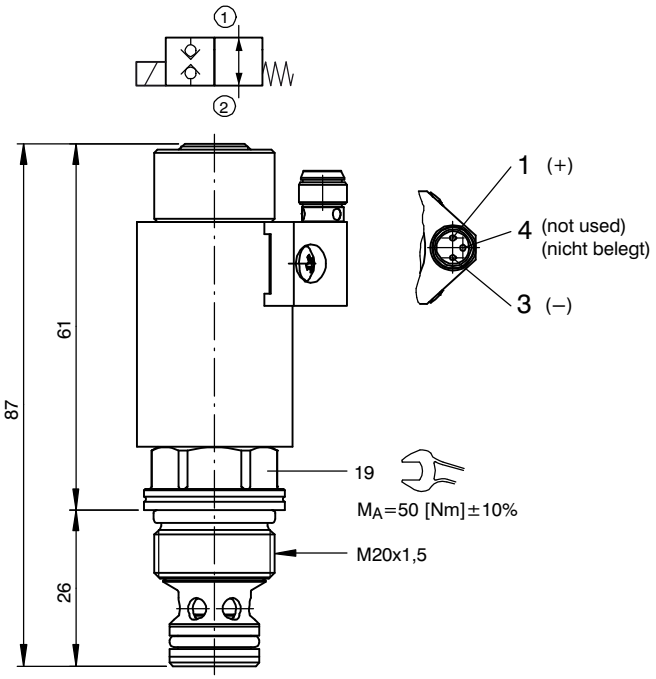

with M20x1.5 thread – cavity type ALM

6 Installation information

IMPORTANT!
When fitting the cartridges, use the specified tightening torque. No adjustments are necessary, since the cartridges are set in the factory.

ATTENTION!
Only qualified personnel with mechanical skills may carry out any maintenance work. Generally, the only work that should ever be undertaken is to check, and possibly replace, the seals. When changing seals, oil or grease the new seals thoroughly before fitting them.

ATTENTION!
If an orifice is fitted directly in port 2 close to the valve, and if the flow direction is from 2 to 1, it is important to ensure that the axis of the orifice drilling is offset from the valve axis by at least 2 mm!

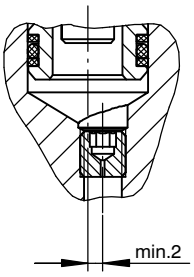

3/4-16 UNF "A" – NBR seal kit no. DS-435-N [1)]

Item	Qty.	Description			
1	1	O-ring	no. 017	∅ 17,17 x 1,78	N90
2	1	O-ring	no. 014	∅ 12,42 x 1,78	N90
3	2	O-ring		∅ 12.00 x 1.50	Viton
4	2	Backup ring		∅10.70 x 1,45 x 1,0 FI0751	

IMPORTANT!
1) Seal kit with FKM (Viton) seals, no. DS-435-V

M20x1.5 "Z" - NBR seal kit no. DS-436-N [1)]

Item	Qty.	Description			
1	1	O-ring	no. 017	∅ 17,17 x 1,78	N90
2	1	O-ring	no. 013	∅ 10,82 x 1,78	N90
3	2	O-ring		∅ 12.00 x 1.50	Viton
4	2	Backup ring		∅ 9.90 x 1,45 x 1,4 FI0751	

IMPORTANT!
1) Seal kit with FKM (Viton) seals, no. DS-436-V

7 Ordering code

Ex. W | S | 22G | D | Z | 5 | _ - 1 | 12 | D | _

W	=	directional valve
S	=	seat valve, direct acting
22G	=	2/2 function, de-energised closed
22O	=	2/2 function, de-energised open
D	=	digital valve
Z	=	special features - with M20x1.5 thread (**standard**)
A	=	standard model - with 3/4 - 16 UNF thread (please contact Bucher)
5	=	nominal size 5
(blank)	=	NBR (Nitrile) seals (**standard**)
V	=	FKM (Viton) seals (special seals - please contact BUCHER)
1 ... 9	=	design stage (omit when ordering new units)
...	=	voltage e.g. 12 (12 V)
D	=	current DC
(blank)	=	M8x1 male connector (**standard**)
F	=	for flying leads (1000 mm), please contact Bucher

IMPORTANT!
For projects with min. 500 pcs/year

8 Related data sheets

Reference	(Old no.)	Description
400-P-040011	(i-32)	The form-tool hire programme
400-P-040171	(i-33.10)	Cavity type AL
400-P-040201	(i-33.13)	Cavity type ALM
400-P-720101	(G-4.10)	Line-mounting body, type GALA (G 3/8”)
400-P-720105	(G-4.11)	Line-mounting body, type GALMA (M20 x 1.5)

info.ch@bucherhydraulics.com www.bucherhydraulics.com

© 2021 by Bucher Hydraulics AG Frutigen, CH-3714 Frutigen
All rights reserved.
Data is provided for the purpose of product description only, and must not be construed as warranted characteristics in the legal sense. The information does not relieve users from the duty of conducting their own evaluations and tests. Because the products are subject to continual improvement, we reserve the right to amend the product specifications contained in this catalogue.

Classification: 430.300.-.305.305.300

BUCHER
hydraulics
WWW.SUMY.IR

Directional valve 2-way/2-position

Q_{max} = 140 l/min, p_{max} = 350 bar
pilot operated, poppet type, switching solenoid
Type series: WS22GN_CB-10...

- Screw-in cartridge valve
- For cavity DC
- All external parts with zinc-nickel plating according to DIN EN ISO 19598
- Installation in threaded port body type DC-12
- With bidirectional seat-valve shut-off
- High flow rates
- Compact construction
- Low head loss
- De-energized closed
- The slip-on coil can be rotated, and it can be replaced without opening the hydraulic envelope
- High pressure wet-armature solenoids
- Various plug-connector systems and voltages are available

Phase-Out

Description

The 2-way/2-position solenoid-operated directional valves, series WS22..., are size 10, two stage, high performance screw-in valves with an M24×1.5 mounting thread. The main and pilot stages are both designed on the poppet/seat principle, and they are therefore virtually leak-free in both directions of flow (bidirectional seat-valve shut-off). All external parts of the screw-in valves are zinc-nickel plated and are thus suitable for use in the harshest operating environments. The slip-on coils can be replaced without opening the hydraulic envelope and can be positioned at any angle through 360°. These screw-in valves are predominantly used in certain mobile and industrial applications where leak-tight shut-off functions are crucially important. Examples are where loads, tensions, or clamping forces must be held without leakage. For self-assembly, please refer to the section related data sheets.

Symbol

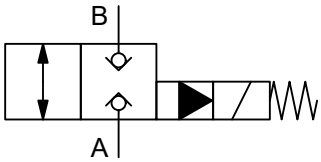

Technical data

General characteristics	Description, value, unit
Product status	Phase-Out
Alternative product	WSVN22G-10F... (400-P-131310)
Function group	Directional valve
Function	2-way/2-position
Design	Screw-in cartridge valve
Controls	switching solenoid
Characteristic	pilot operated, poppet type
MTTFd value	150 years
Construction size	NG 10
Thread size	M24×1,5
Mounting attitude	unrestricted
Weight	0.52 kg
Cavity acc. factory standard	For cavity DC
Tightening torque steel	100 Nm
Tightening torque aluminium	100 Nm
Tightening torque tolerance	± 10 %
Minimum ambient temperature	- 30 °C
Maximum ambient temperature	+ 80 °C
Surface protection	All external parts with zinc-nickel plating according to DIN EN ISO 19598
Sealing material	see ordering code
Seal kit order number	NBR: DS-281-N / FKM: DS-281-V

Hydraulic characteristics	Description, value, unit
Maximum operating pressure	350 bar
Maximum flow rate	140 l/min
Flow direction	see symbol
Hydraulic fluid	HL and HLP mineral oil according to DIN 51 524; other fluids on request!
Minimum fluid temperature	- 30 °C
Maximum fluid temperature	+ 80 °C
Viscosity range	10 ... 500 mm^2/s (cSt)
Recommended viscosity range	15 ... 250 mm^2/s (cSt)
Minimum fluid cleanliness (cleanlineless class according to ISO 4406:1999)	class 20/18/15

IMPORTANT!
The less favorable values from the general, hydraulic and electrical characteristics determine the temperature range of the whole valve.

IMPORTANT!
The maximum fluid temperature must not exceed the permissible ambient temperature for the whole valve.

Phase-Out

WWW.SUMY.IR

Electric characteristics	Description, value, unit
Actuator type	solenoid coil
Solenoid coils type	D36
Supply voltage DC	12/24 V DC
Supply voltage AC	115/230 (50 ... 60 Hz) V AC
Supply voltage tolerance	± 10 %
Nominal power consumption	V DC = 27 W / V AC = 25 W
Relative duty cycle	100 %
Minimum ambient temperature	- 30 °C
Maximum ambient temperature	+ 50 °C
Electrical connection coil	several connection types available, see ordering code
Protection class solenoid coil to ISO 20 653 / EN 60 529	several classes of protection available, see ordering code (with appropriate mating connector and proper fitting and sealing)

Performance graphs

measured with oil viscosity 33.0 mm²/s (cSt), coil at steady-state temperature and 10 % undervoltage

p = f (Q) Performance limit

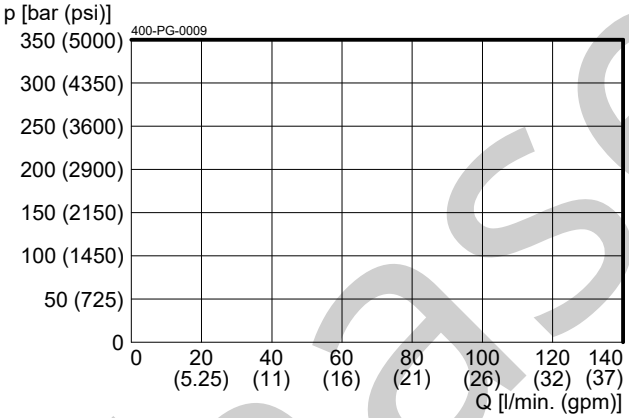

Δp = f (Q) Pressure drop-flow rate characteristic

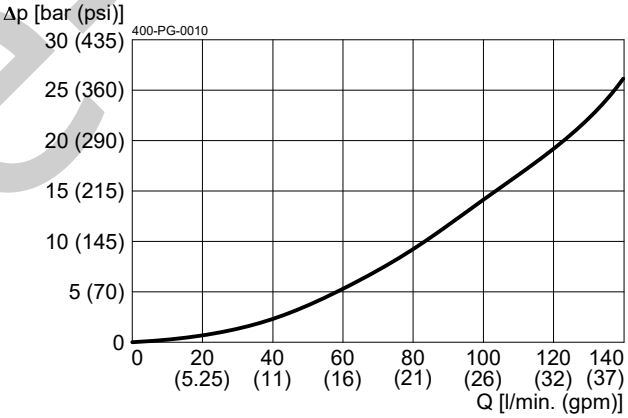

Phase-Out

Dimensions and sectional view

Beispiel für die Masseinheit:
Exampel for the dimensional units:

0.79	= 0.79 mm	millimeter
(.031)	= 0.031"	inch

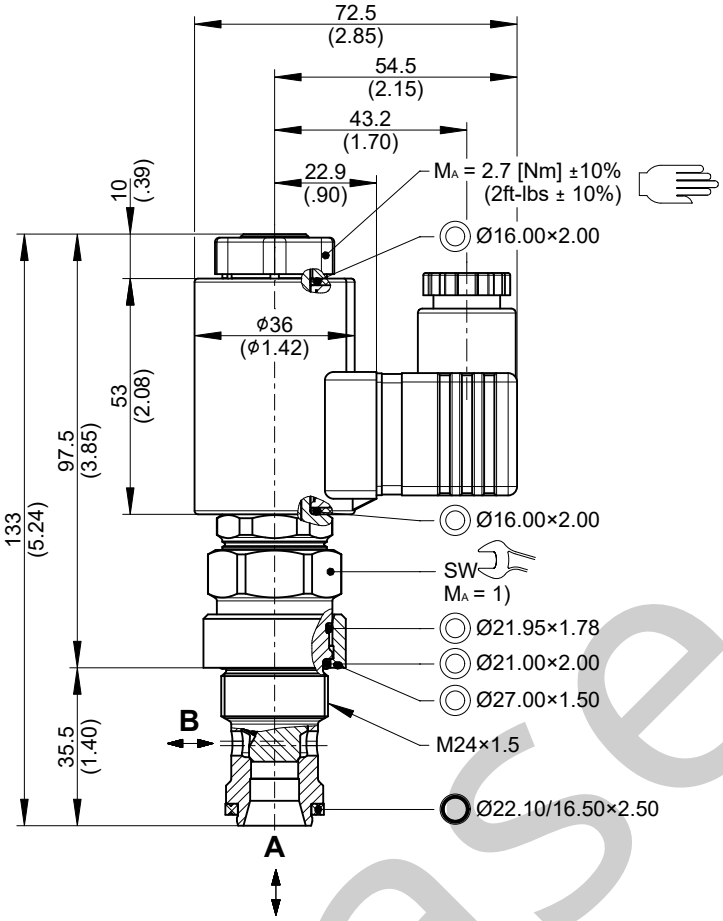

Installation information

NOTE!
1) When fitting the screw-in cartridge valve, use the specified tightening torque. The value can be found in the chapter "Technical data".

ATTENTION!
Only qualified personnel with mechanical skills may carry out any maintenance work. Generally, the only work that should ever be undertaken is to check, and possibly replace, the seals. When changing seals, oil or grease the new seals thoroughly before fitting them.

Phase-Out

BUCHER hydraulics
WWW.SUMY.IR

Return spring for main spool

Version "R": Rückstellfreder für Hauptkolben. /
Version "R": Return spring for main spool.

Zur Unterstützung der Schliesskraft.
Gleichzeitig wird das Δp beim Öffnen erhöht. /
To assist the closingforce.
This results in a higher Δp when opening.

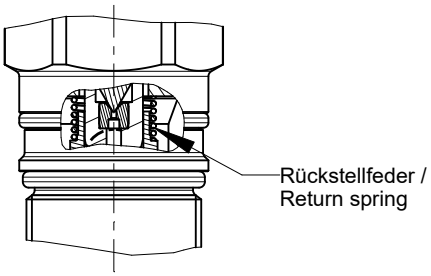

Δp = f (Q) Druckverlust-Volumenstrom

Mit Rückstellfeder / With return spring

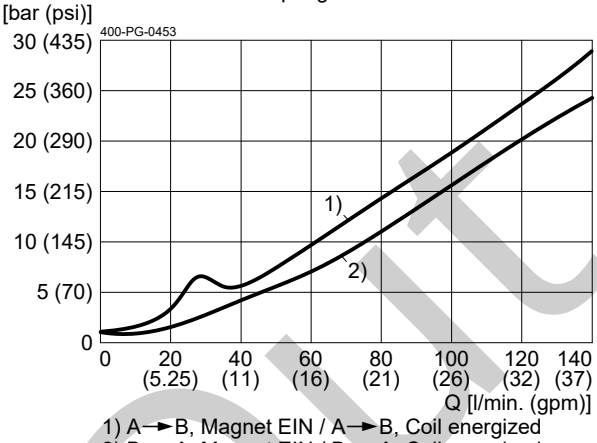

1) A→B, Magnet EIN / A→B, Coil energized
2) B→A, Magnet EIN / B→A, Coil energized

Ordering code

z.B. W S 22G N _ C B - 10 _ - 1 24 D - _

W	=	Wegventil / Directional valve
S	=	Sitzausführung / seated design
22G	=	2-Wege 2/2-Stellfunktion, stromlos geschlossen / 2-way 2/2-position function, normally closed
N	=	Elektrisch betätigt, 27 W DC / 25 VA AC / Electrically operated, 27 W DC / 25 VA AC
(blank)	=	Ohne Rückstellfeder für Hauptkolben (Standard) / Without return spring for main spool (standard)
R	=	Mit Rückstellfeder für Hauptkolben (auf Anfrage) / With return spring for main spool (on request)
C	=	Bauvariante / Variant C
A ... Q	=	Standard-Ausführung gemäß gültigem Datenblatt / Standard version according to valid data sheet
Z ... R	=	Spezial-Ausführung (auf Anfrage) / Special version (on request)
10	=	Nennweite 10 / Nominal size 10
(blank)	=	NBR (Nitril-Butadien-Kautschuk) / NBR (Nitrile butadiene rubber) (Standard)
V	=	FKM (Fluor-Kautschuk) / FKM (Fluoroelastomer)
		Spezial-Dichtungen auf Anfrage / Special seals on request
1 ... 9	=	Technischer Stand (bei Bestellung weglassen) / Technical design (omit when ordering)
...	=	Spannungswert (24 V) / Voltage (24 V)
D	=	Strom DC / Current DC
A	=	Strom AC / Current AC
(blank)	=	DIN EN 175301-803 Anschluss / connection 3-polig + PE (Standard) / 3-pole + PE (Standard) (IP 65) mit Gegenstecker / with mating plug
T	=	DIN EN 175301-803 Anschluss / connection 3-polig + PE, mit Schutzdiode / 3-pole + PE, with protection diode (IP 65) mit Gegenstecker / with mating plug
M100	=	DIN EN 175301-803 Anschluss / connection 3-polig + PE / 3-pole + PE (IP 65)
J	=	Junior-Timer-Stecker-Anschluss / Junior-Timer-plug-connection 2-polig radial / 2-pole radial (IP 65)
JT	=	Junior-Timer-Stecker-Anschluss / Junior-Timer-plug-connection 2-polig radial, mit Schutzdiode / 2-pole radial, with protection diode (IP 65)
I	=	Junior-Timer-Stecker-Anschluss / Junior-Timer-plug-connection 2-polig axial / 2-pole axial (IP 65) ohne Gegenstecker / without mating plug
IT	=	Junior-Timer-Stecker-Anschluss / Junior-Timer-plug-connection 2-polig axial, mit Schutzdiode / 2-pole axial, with protection diode (IP 65)
D	=	Deutsch-Stecker-Anschluss / DT04-2P-2P 2-polig 45° / 2-pole 45° (IP 67/69K)
DT	=	Deutsch-Stecker-Anschluss / DT04-2P-2P 2-polig 45°, mit Schutzdiode / 2-pole 45°, with protection diode (IP 67/69K)
		Weitere Steckeranschlussvarianten auf Anfrage. / Other plug-connection variants on request.
		W
		W

WICHTIG!
Nicht jede Kombination von Spannungswert, Stromart und Steckeranschlussvarianten erhältlich.
IMPORTANT!
Not every combination of voltage value, current type and plug connection variants available.

Phase-Out

WWW.SUMY.IR

Related data sheets

Reference	Description
400-P-040011	Form tools
400-P-010101	MTTFd Values for Hydraulic Valves
400-P-120110	Solenoid coil D36
400-P-060111	Cavity DC
400-P-740101	Threaded port body DC-12

Phase-Out

info.ch@bucherhydraulics.com **www.bucherhydraulics.com**

© 2025 by Bucher Hydraulics AG Frutigen, 3714 Frutigen, Switzerland

All rights reserved.
Data is provided for the purpose of product description only, and must not be construed as warranted characteristics in the legal sense. The information does not relieve users from the duty of conducting their own evaluations and tests. Because the products are subject to continual improvement, we reserve the right to amend the product specifications contained in this catalogue.

BUCHER
hydraulics
WWW.SUMY.IR

Directional valve 2-way/2-position

Q_{max} = 140 l/min, p_{max} = 350 bar
pilot operated, poppet type, switching solenoid
Type series: WS22GN_DB-10...

- Screw-in cartridge valve
- For cavity DD
- All external parts with zinc-nickel plating according to DIN EN ISO 19598
- Installation in threaded port body type DD-12
- With bidirectional seat-valve shut-off
- High flow rates
- Compact construction
- Low head loss
- De-energized closed
- The slip-on coil can be rotated, and it can be replaced without opening the hydraulic envelope
- High pressure wet-armature solenoids
- Various plug-connector systems and voltages are available

Phase-Out

Description

The 2-way/2-position solenoid-operated directional valves, series WS22..., are size 10, two stage, high performance screw-in valves with an M24×1.5 mounting thread. The main and pilot stages are both designed on the poppet/seat principle, and they are therefore virtually leak-free in both directions of flow (bidirectional seat-valve shut-off). All external parts of the screw-in valves are zinc-nickel plated and are thus suitable for use in the harshest operating environments. The slip-on coils can be replaced without opening the hydraulic envelope and can be positioned at any angle through 360°. These screw-in valves are predominantly used in certain mobile and industrial applications where leak-tight shut-off functions are crucially important. Examples are where loads, tensions, or clamping forces must be held without leakage. For self-assembly, please refer to the section related data sheets.

Symbol

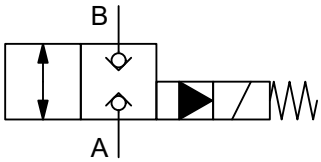

Technical data

General characteristics	Description, value, unit
Product status	Phase-Out
Alternative product	WSVN22G-10F... (400-P-131310)
Function group	Directional valve
Function	2-way/2-position
Design	Screw-in cartridge valve
Controls	switching solenoid
Characteristic	pilot operated, poppet type
MTTFd value	150 years
Construction size	NG 10
Thread size	M24×1,5
Mounting attitude	unrestricted
Weight	0.52 kg
Cavity acc. factory standard	For cavity DD
Tightening torque steel	65 Nm
Tightening torque aluminium	50 Nm
Tightening torque tolerance	± 10 %
Minimum ambient temperature	- 30 °C
Maximum ambient temperature	+ 80 °C
Surface protection	All external parts with zinc-nickel plating according to DIN EN ISO 19598
Sealing material	see ordering code
Seal kit order number	NBR: DS-281-N / FKM: DS-281-V

Hydraulic characteristics	Description, value, unit
Maximum operating pressure	350 bar
Maximum flow rate	140 l/min
Flow direction	see symbol
Hydraulic fluid	HL and HLP mineral oil according to DIN 51 524; other fluids on request!
Minimum fluid temperature	- 30 °C
Maximum fluid temperature	+ 80 °C
Viscosity range	10 ... 500 mm^2/s (cSt)
Recommended viscosity range	15 ... 250 mm^2/s (cSt)
Minimum fluid cleanliness (cleanlineless class according to ISO 4406:1999)	class 20/18/15

IMPORTANT!
The less favorable values from the general, hydraulic and electrical characteristics determine the temperature range of the whole valve.

IMPORTANT!
The maximum fluid temperature must not exceed the permissible ambient temperature for the whole valve.

Phase-Out

WWW.SUMY.IR

Electric characteristics	Description, value, unit
Actuator type	solenoid coil
Solenoid coils type	D36
Supply voltage DC	12/24 V DC
Supply voltage AC	115/230 (50 ... 60 Hz) V AC
Supply voltage tolerance	± 10 %
Nominal power consumption	V DC = 27 W / V AC = 25 W
Relative duty cycle	100 %
Minimum ambient temperature	- 30 °C
Maximum ambient temperature	+ 50 °C
Electrical connection coil	several connection types available, see ordering code
Protection class solenoid coil to ISO 20 653 / EN 60 529	several classes of protection available, see ordering code (with appropriate mating connector and proper fitting and sealing)

Performance graphs

measured with oil viscosity 33.0 mm²/s (cSt), coil at steady-state temperature and 10 % undervoltage

p = f (Q) Performance limit

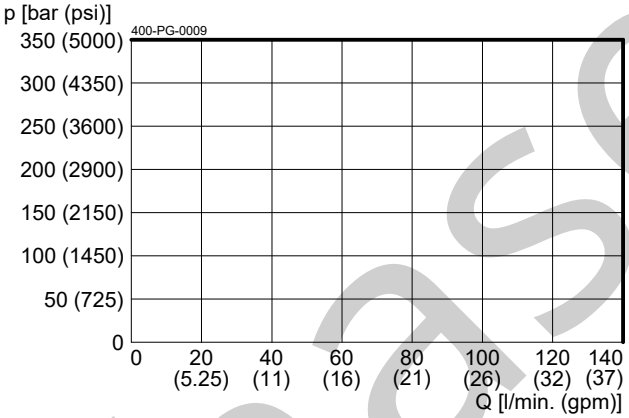

Δp = f (Q) Pressure drop-flow rate characteristic

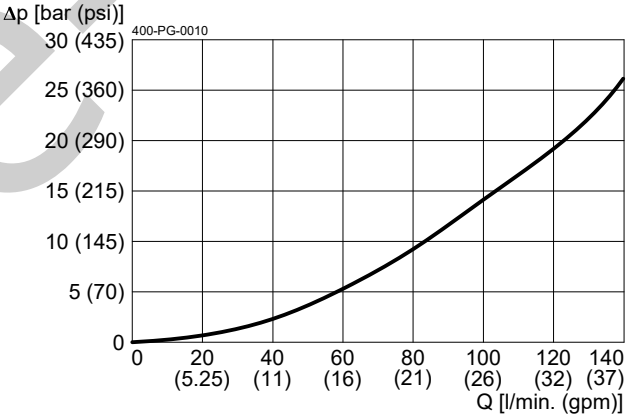

Phase-Out

WWW.SUMY.IR

Dimensions and sectional view

Beispiel für die Masseinheit:
Exampel for the dimensional units:

0.79	= 0.79 mm	millimeter
(.031)	= 0.031"	inch

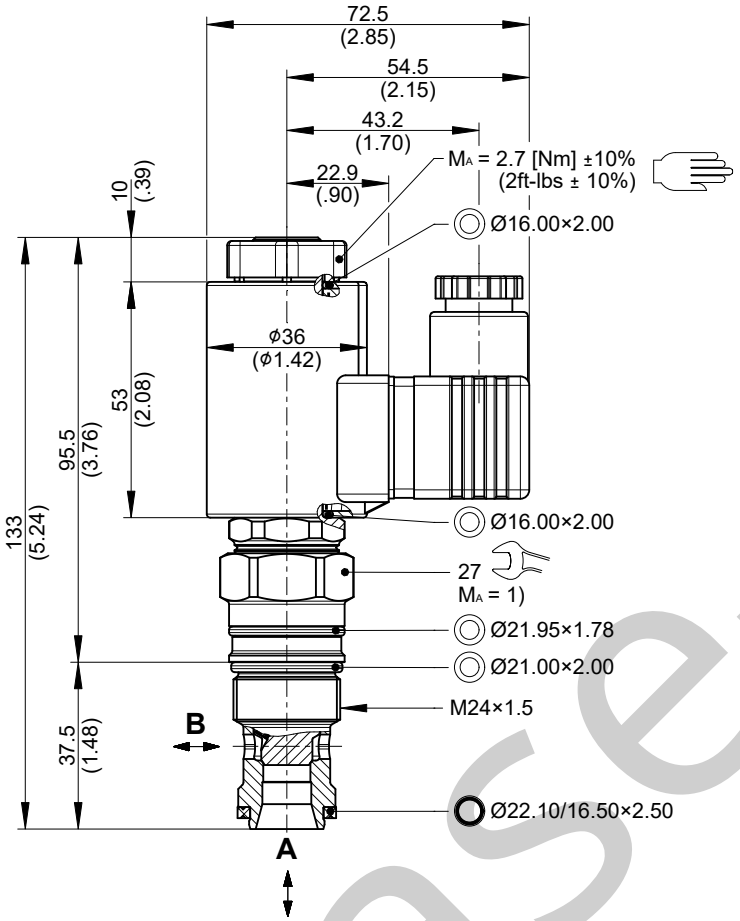

Installation information

IMPORTANT!
1) When fitting the screw-in cartridge valve, use the specified tightening torque. The value can be found in the chapter "Technical data".

ATTENTION!
Only qualified personnel with mechanical skills may carry out any maintenance work. Generally, the only work that should ever be undertaken is to check, and possibly replace, the seals. When changing seals, oil or grease the new seals thoroughly before fitting them.

Phase-Out

Return spring for main spool

Version "R": Rückstellfeder für Hauptkolben. /
Version "R": Return spring for main spool.

Zur Unterstützung der Schliesskraft.
Gleichzeitig wird das Δp beim Öffnen erhöht. /
To assist the closingforce.
This results in a higher Δp when opening.

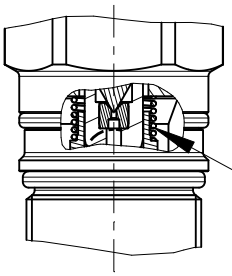

Δp = f (Q) Druckverlust-Volumenstrom

Mit Rückstellfeder / With return spring

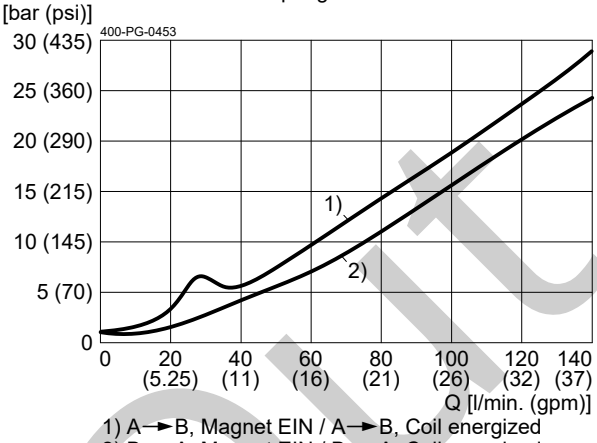

1) A→B, Magnet EIN / A→B, Coil energized
2) B→A, Magnet EIN / B→A, Coil energized

Ordering code

z.B. W S 22G N _ D B - 10 _ - 1 24 D - _

W	=	Wegventil / Directional valve
S	=	Sitzausführung / seated design
22G	=	2-Wege 2/2-Stellfunktion, stromlos geschlossen / 2-way 2/2-position function, normally closed
N	=	Elektrisch betätigt, 27 W DC / 25 VA AC / Electrically operated, 27 W DC / 25 VA AC
(blank)	=	Ohne Rückstellfeder für Hauptkolben (Standard) / Without return spring for main spool (standard)
R	=	Mit Rückstellfeder für Hauptkolben (auf Anfrage) / With return spring for main spool (on request)
D	=	Bauvariante DC / Variant DC
A ... Q	=	Standard-Ausführung gemäß gültigem Datenblatt / Standard-Version according to valid data sheet
Z ... R	=	Spezial-Ausführung (auf Anfrage) / Special-Version (on request)
10	=	Nennweite 10 / Nominal size 10
(blank)	=	NBR (Nitril-Butadien-Kautschuk) / NBR (Nitrile Butadiene Rubber) (Standard)
V	=	FKM (Fluor-Kautschuk) / FKM (Fluoro-Carbon Rubber)
		Spezial-Dichtungen auf Anfrage / Special-Seals on request
1 ... 9	=	Technischer Stand (bei Bestellung weglassen) / Technical Standard (omit when ordering)
...	=	Spannungswert (24 V) / Voltage (24 V)
D	=	Strom DC / Current DC
A	=	Strom AC / Current AC
(blank)	=	DIN EN 175301-803 Anschluss / Connection 3-polig + PE (Standard) / 3-pole + PE (Standard) (IP 65) mit Gegenstecker / with mating plug
T	=	DIN EN 175301-803 Anschluss / Connection 3-polig + PE, mit Schutzdiode / 3-pole + PE, with protection diode (IP 65) mit Gegenstecker / with mating plug
M100	=	DIN EN 175301-803 Anschluss / Connection 3-polig + PE / 3-pole + PE (IP 65)
J	=	Junior-Timer-Stecker-Anschluss / Junior-Timer-plug-connection 2-polig radial / 2-pole radial (IP 65)
JT	=	Junior-Timer-Stecker-Anschluss / Junior-Timer-plug-connection 2-polig radial, mit Schutzdiode / 2-pole radial, with protection diode (IP 65)
I	=	Junior-Timer-Stecker-Anschluss / Junior-Timer-plug-connection 2-polig axial / 2-pole axial (IP 65) ohne Gegenstecker / without mating plug
IT	=	Junior-Timer-Stecker-Anschluss / Junior-Timer-plug-connection 2-polig axial, mit Schutzdiode / 2-pole axial, with protection diode (IP 65)
D	=	Deutsch-Stecker-Anschluss DT04-2P / Deutsch-plug-connection DT04-2P 2-polig 45° / 2-pole 45° (IP 67/69K)
DT	=	Deutsch-Stecker-Anschluss DT04-2P / Deutsch-plug-connection DT04-2P 2-polig 45°, mit Schutzdiode / 2-pole 45°, with protection diode (IP 67/69K)
		Weitere Steckeranschlussvarianten auf Anfrage. / Other plug-connection variants on request.
		W
		W

WICHTIG!
IMPORTANT!
Nicht jede Kombination von Spannungswert, Steckeranschlussvarianten erhältlich.
Not every combination of voltage value, connection type and plug-connection variants available.

Phase-Out

BUCHER hydraulics
WWW.SUMY.IR

Related data sheets

Reference	Description
400-P-040011	Form tools
400-P-010101	MTTFd Values for Hydraulic Valves
400-P-120110	Solenoid coil D36
400-P-060121	Cavity DD
400-P-740111	Threaded port body DD-12

Phase-Out

info.ch@bucherhydraulics.com **www.bucherhydraulics.com**

© 2025 by Bucher Hydraulics AG Frutigen, 3714 Frutigen, Switzerland

All rights reserved.
Data is provided for the purpose of product description only, and must not be construed as warranted characteristics in the legal sense. The information does not relieve users from the duty of conducting their own evaluations and tests. Because the products are subject to continual improvement, we reserve the right to amend the product specifications contained in this catalogue.

BUCHER hydraulics

WWW.SUMY.IR

Directional valve 2-way/2-position

Q_{max} = 140 l/min, p_{max} = 350 bar
pilot operated, poppet type, switching solenoid
Type series: WS22GN_HA-10...

- Screw-in cartridge valve
- For cavity DH
- All external parts with zinc-nickel plating according to DIN EN ISO 19598
- Installation in threaded port body type GCDHA
- With bidirectional seat-valve shut-off
- High flow rates
- Compact construction
- Low head loss
- Version with return spring for main spool (on request)
- De-energized closed
- The slip-on coil can be rotated, and it can be replaced without opening the hydraulic envelope
- High pressure wet-armature solenoids
- Various plug-connector systems and voltages are available

Description

The 2-way/2-position solenoid-operated directional valves, series WS22..., are size 10, two stage, high performance screw-in valves with an M27×2 mounting thread. The main and pilot stages are both designed on the poppet/seat principle, and they are therefore virtually leak-free in both directions of flow (bidirectional seat-valve shut-off). All external parts of the screw-in valves are zinc-nickel plated and are thus suitable for use in the harshest operating environments. The slip-on coils can be replaced without opening the hydraulic envelope and can be positioned at any angle through 360°. These screw-in valves are predominantly used in certain mobile and industrial applications where leak-tight shut-off functions are crucially important. Examples are where loads, tensions, or clamping forces must be held without leakage. For self-assembly, please refer to the section related data sheets.

Symbol

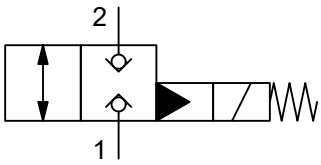

Technical data

General characteristics	Description, value, unit
Function group	Directional valve
Function	2-way/2-position
Design	Screw-in cartridge valve
Controls	switching solenoid
Characteristic	pilot operated, poppet type
MTTFd value	150 years
Construction size	NG 10
Thread size	M27×2
Mounting attitude	unrestricted
Weight	0.52 kg
Cavity acc. ISO	fits into ISO 7789: 27-01-0-07
Cavity acc. factory standard	For cavity DH
Tightening torque steel	80 Nm
Tightening torque aluminium	80 Nm
Tightening torque tolerance	± 10 %
Minimum ambient temperature	- 30 °C
Maximum ambient temperature	+ 80 °C
Surface protection	All external parts with zinc-nickel plating according to DIN EN ISO 19598
Sealing material	see ordering code
Seal kit order number	NBR: DS-367-N / FKM-DS-367-V

Hydraulic characteristics	Description, value, unit
Maximum operating pressure	350 bar
Maximum flow rate	140 l/min
Flow direction	see symbol
Hydraulic fluid	HL and HLP mineral oil according to DIN 51 524; other fluids on request!
Minimum fluid temperature	- 30 °C
Maximum fluid temperature	+ 80 °C
Viscosity range	10 ... 500 mm^2/s (cSt)
Recommended viscosity range	15 ... 250 mm^2/s (cSt)
Minimum fluid cleanliness (cleanlineless class according to ISO 4406:1999)	class 20/18/15

Electric characteristics	Description, value, unit
Actuator type	solenoid coil
Solenoid coils type	D36
Supply voltage DC	12/24 V DC
Supply voltage AC	115/230 (50 ... 60 Hz) V AC
Supply voltage tolerance	± 10 %
Nominal power consumption	V DC = 27 W / V AC = 25 W W
Relative duty cycle	100 %

WWW.SUMY.IR

Electric characteristics	Description, value, unit
Minimum ambient temperature	- 30 °C
Maximum ambient temperature	+ 50 °C
Electrical connection coil	several connection types available, see ordering code
Protection class solenoid coil to ISO 20 653 / EN 60 529	several classes of protection available, see ordering code (with appropriate mating connector and proper fitting and sealing)

Performance graphs

measured with oil viscosity 33.0 mm^2/s (cSt), coil at steady-state temperature and 10 % undervoltage

p = f (Q) Performance limit

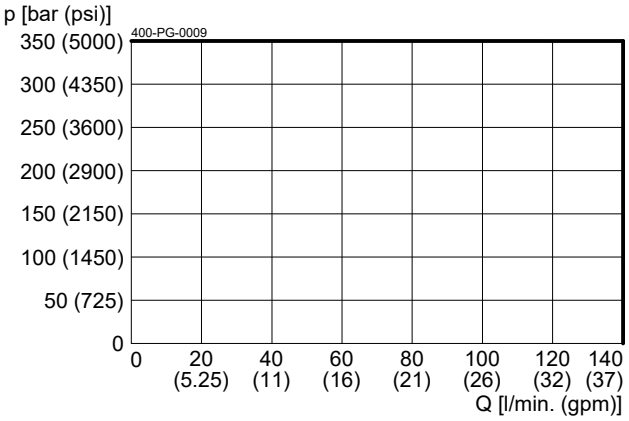

Δp = f (Q) Pressure drop-flow rate characteristic

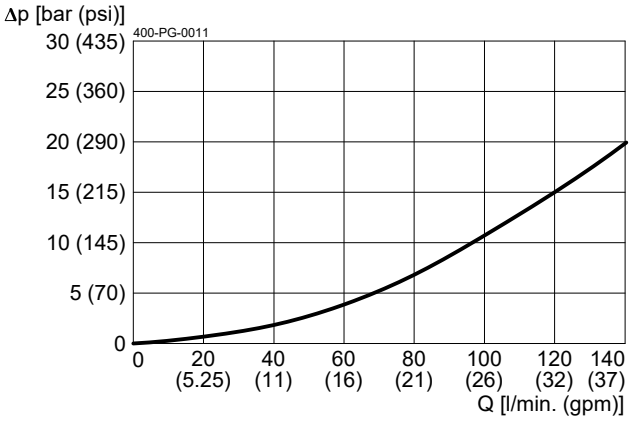

Dimensions and sectional view

Beispiel für die Masseinheit:
Exampel for the dimensional units:

0.79	= 0.79 mm	millimeter
(.031)	= 0.031"	inch

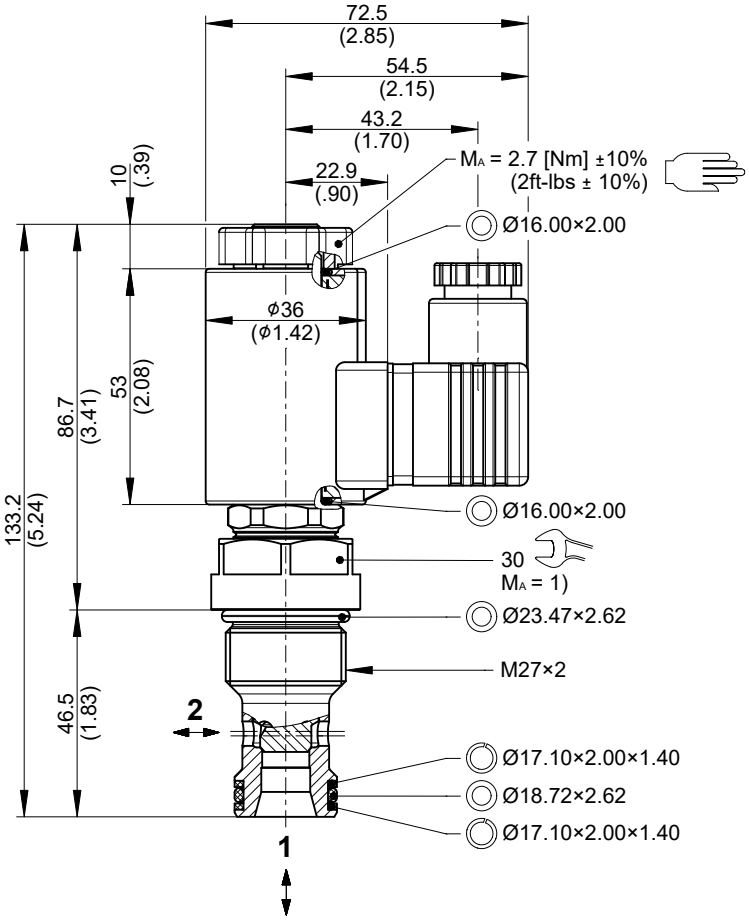

Installation information

NOTE!
1) When fitting the screw-in cartridge valve, use the specified tightening torque. The value can be found in the chapter "Technical data".

ATTENTION!
Only qualified personnel with mechanical skills may carry out any maintenance work. Generally, the only work that should ever be undertaken is to check, and possibly replace, the seals. When changing seals, oil or grease the new seals thoroughly before fitting them.

Return spring for main spool

Version "R": Rückstellfeder für Hauptkolben. /
Version "R": Return spring for main spool.

Zur Unterstützung der Schliesskraft.
Gleichzeitig wird das Δp beim Öffnen erhöht. /
To assist the closingforce.
This results in a higher Δp when opening.

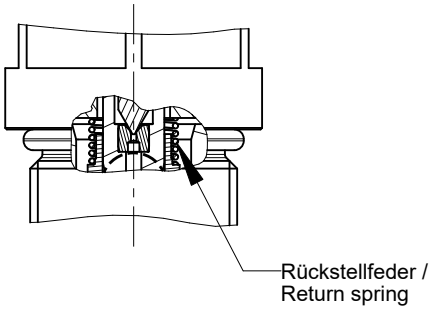

Δp = f (Q) Druckverlust-Volumenstrom

Mit Rückstellfeder / With return spring

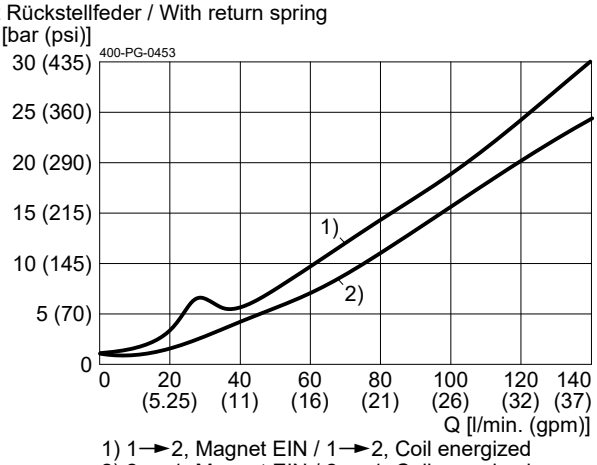

1) 1➞2, Magnet EIN / 1➞2, Coil energized
2) 2➞1, Magnet EIN / 2➞1, Coil energized

Ordering code

z.B.	W	S	22G	N	_	H	A	-	10	_	-	1	24	D	-	_

W	=	Wegventil / Directional valve				
S	=	Sitzausführung / Poppet design				
22G	=	2-Wege/2-Stellungsfunktion, stromlos geschlossen / 2-way/2-position function, normally closed				
N	=	Elektrisch betätigt, 12 VDC / 27 W, 24 VDC / 25 W / Electrically operated, 12 VDC / 27 W, 24 VDC / 25 W				
(blank)	=	Ohne Rückstellfeder für Hauptkolben (Standard) / Without return spring for main spool (standard)				
R	=	Mit Rückstellfeder für Hauptkolben (nach Anfrage) / With return spring for main spool (on request)				
H	=	Bauvariante DH / Variant DH				
A ... Q	=	Standard-Ausführung gemäß gültigem Datenblatt / Standard-Ausführung according to valid data sheet				
Z ... R	=	Spezial-Ausführung (auf Anfrage) / Special-Ausführung (on request)				
10	=	Nennweite 10 / Nominal size 10				
(blank)	=	NBR (Nitril-Butadien-Kautschuk) / NBR (Nitrile Butadiene Rubber) (Standard)				
V	=	FKM (Fluor-Kautschuk) / FKM (Fluoro-Carbon rubber)				
		(Spezial-Dichtungen auf Anfrage) / (Special seals on request)				
1 ... 9	=	Technischer Stand (bei Bestellung weglassen) / Technical design (omit when ordering)				
...	=	Spannungsvariante / Voltage variant 24 (24 V)				
D	=	Strom / Current DC				
A	=	Strom / Current AC				
(blank)	=	DIN EN 175301-803 Anschluss / Connection	3-polig + PE (Standard) / 3-pole + PE (Standard)	(IP 65)	mit Gegenstecker / with mating plug	
T	=	DIN EN 175301-803 Anschluss / Connection	3-polig + PE, mit Schutzdiode / 3-pole + PE, with protection diode	(IP 65)	mit Gegenstecker / with mating plug	
M100	=	DIN EN 175301-803 Anschluss / Connection	3-polig + PE / 3-pole + PE	(IP 65)	ohne Gegenstecker / without mating plug	
J	=	Junior-Timer-Stecker-Anschluss / Junior-Timer-plug-connection	2-polig radial / 2-pole radial	(IP 65)		
JT	=	Junior-Timer-Stecker-Anschluss / Junior-Timer-plug-connection	2-polig radial, mit Schutzdiode / 2-pole radial, with protection diode	(IP 65)		
I	=	Junior-Timer-Stecker-Anschluss / Junior-Timer-plug-connection	2-polig axial / 2-pole axial	(IP 65)		
IT	=	Junior-Timer-Stecker-Anschluss / Junior-Timer-plug-connection	2-polig axial, mit Schutzdiode / 2-pole axial, with protection diode	(IP 65)		
D	=	Deutsch-Stecker-Anschluss / DT04-2P-E	2-polig 45° / 2-pole 45°	(IP 67/69K)		
DT	=	Deutsch-Stecker-Anschluss / DT04-2P-E	2-polig 45°, mit Schutzdiode / 2-pole 45°, with protection diode	(IP 67/69K)		
		Weitere Steckeranschlussvarianten auf Anfrage. / Other plug-connection variants on request.				
		W				
		W				

WICHTIG!
IMPORTANT!
Nicht jede Kombination von Spannungsvarianten, Steckeranschlussvarianten erhältlich.
Not every combination of voltage variants, type of plug connection variants available.

WWW.SUMY.IR

Related data sheets

Reference	Description
400-P-040011	Form tools
400-P-010101	MTTFd Values for Hydraulic Valves
400-P-120110	Solenoid coil D36
400-P-060171	Cavity DH
400-P-740161	Threaded port body GCDHA

info.ch@bucherhydraulics.com **www.bucherhydraulics.com**

© 2025 by Bucher Hydraulics AG Frutigen, 3714 Frutigen, Switzerland

All rights reserved.
Data is provided for the purpose of product description only, and must not be construed as warranted characteristics in the legal sense. The information does not relieve users from the duty of conducting their own evaluations and tests. Because the products are subject to continual improvement, we reserve the right to amend the product specifications contained in this catalogue.

WWW.SUMY.IR

Directional valve 2-way/2-position

Q_{max} = 140 l/min, p_{max} = 350 bar
bidirectional, pilot operated, poppet type, switching solenoid
Type series: WSVN22G-10F...

- Screw-in cartridge valve
- For cavity HF/C1220A
- All external parts with zinc-nickel plating according to DIN EN ISO 19598
- Reliable switching, even after long dwell times
- De-energized closed
- The slip-on coil can be rotated, and it can be replaced without opening the hydraulic envelope
- High pressure wet-armature solenoids
- Various plug-connector systems and voltages are available

Description

The 2-way/2-position solenoid-operated directional seat valves, series WSVN22G..., are size 10 / SAE 12, two stage, pressure balanced screw-in valves with an 1 1/16-12 UN mounting thread. The main and pilot stages are both designed on the poppet/seat principle, and they are therefore virtually leak-free in both directions of flow (bidirectional seat-valve shut-off). All external parts of the screw-in valves are zinc-nickel plated and are thus suitable for use in the harshest operating environments. The slip-on coils can be replaced without opening the hydraulic envelope and can be positioned at any angle through 360°. These valves are used in mobile and industrial applications where leak-tight shut-off functions are crucially important. Examples are where loads, tensions, or clamping forces must be held without leakage.For self-assembly, please refer to the section related data sheets.

Symbol

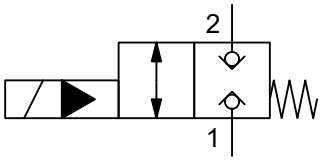

Technical data

General characteristics	Description, value, unit
Function group	Directional valve
Function	2-way/2-position
Design	Screw-in cartridge valve
Controls	switching solenoid
Characteristic	bidirectional, pilot operated, poppet type
MTTFd value	150 years
Construction size	NG 10 / SAE 12
Thread size	1 1/16-12 UN-2A
Mounting attitude	unrestricted
Weight	0.6 kg
Cavity acc. factory standard	For cavity HF/C1220A
Tightening torque steel	150 Nm
Tightening torque aluminium	150 Nm
Tightening torque tolerance	± 10 %
Minimum ambient temperature	- 30 °C
Maximum ambient temperature	+ 50 °C
Surface protection	All external parts with zinc-nickel plating according to DIN EN ISO 19598
Sealing material	see ordering code
Seal kit order number	NBR: DS-518-N / FKM: DS-518-V

Hydraulic characteristics	Description, value, unit
Maximum operating pressure	350 bar
Maximum flow rate	140 l/min
Flow direction	see symbol
Hydraulic fluid	HL and HLP mineral oil according to DIN 51 524; other fluids on request!
Minimum fluid temperature	- 30 °C
Maximum fluid temperature	+ 80 °C
Viscosity range	10 ... 500 mm^2/s (cSt)
Recommended viscosity range	15 ... 250 mm^2/s (cSt)
Minimum fluid cleanliness (cleanlineless class according to ISO 4406:1999)	class 20/18/15

Electric characteristics	Description, value, unit
Actuator type	solenoid coil
Solenoid coils type	D36
Supply voltage DC	12/24 V DC
Supply voltage AC	115/230 (50 ... 60 Hz) V AC
Supply voltage tolerance	± 10 %
Nominal power consumption	V DC = 27 W / V AC = 25 W

WWW.SUMY.IR

Electric characteristics	Description, value, unit
Switching time	Switching time measured at: UN; Δp = 280 bar; Q = 112 l/min; TAmbient = 20 °C; ϑ = 46 mm2/s / 1 to 2: 78 ms (energizing) 63 ms (de-energizing) 2 to 1: 79 ms (energizing) 73 ms (de-energizing)
Relative duty cycle	100 %
Electrical connection coil	several connection types available, see ordering code
Protection class solenoid coil to ISO 20 653 / EN 60 529	several classes of protection available, see ordering code (with appropriate mating connector and proper fitting and sealing)

NOTE!
The switching time can be strongly dependent on flow rate, pressure, oil viscosity and the dwell time under pressure. In practice, the switching time may therefore deviate from the specified value range.

Performance graphs

measured with oil viscosity 33.0 mm²/s (cSt), coil at steady-state temperature and 10 % undervoltage

p = f (Q) Performance limit

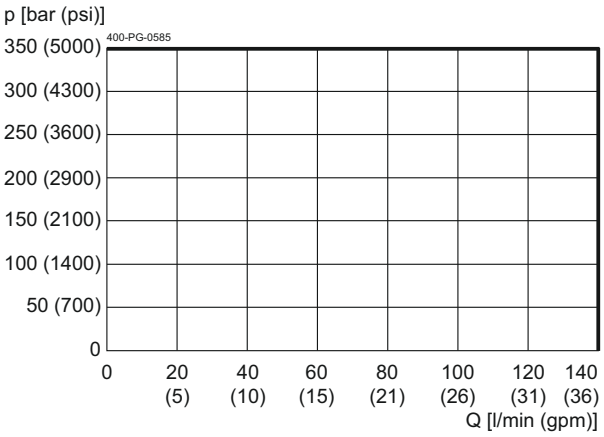

Δp = f (Q) Pressure drop-flow rate characteristic

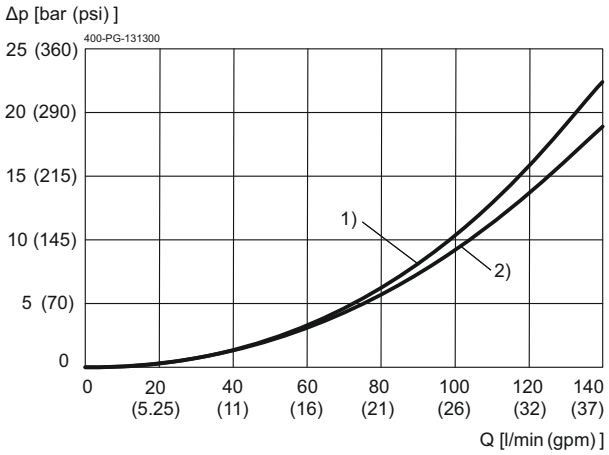

1) = 2→1
2) = 1→2

WWW.SUMY.IR

Dimensions and sectional view

Beispiel für die Masseinheit:
Example for the dimensional units:

0.79 = 0.79 mm millimeter
(.031) = 0.031" inch

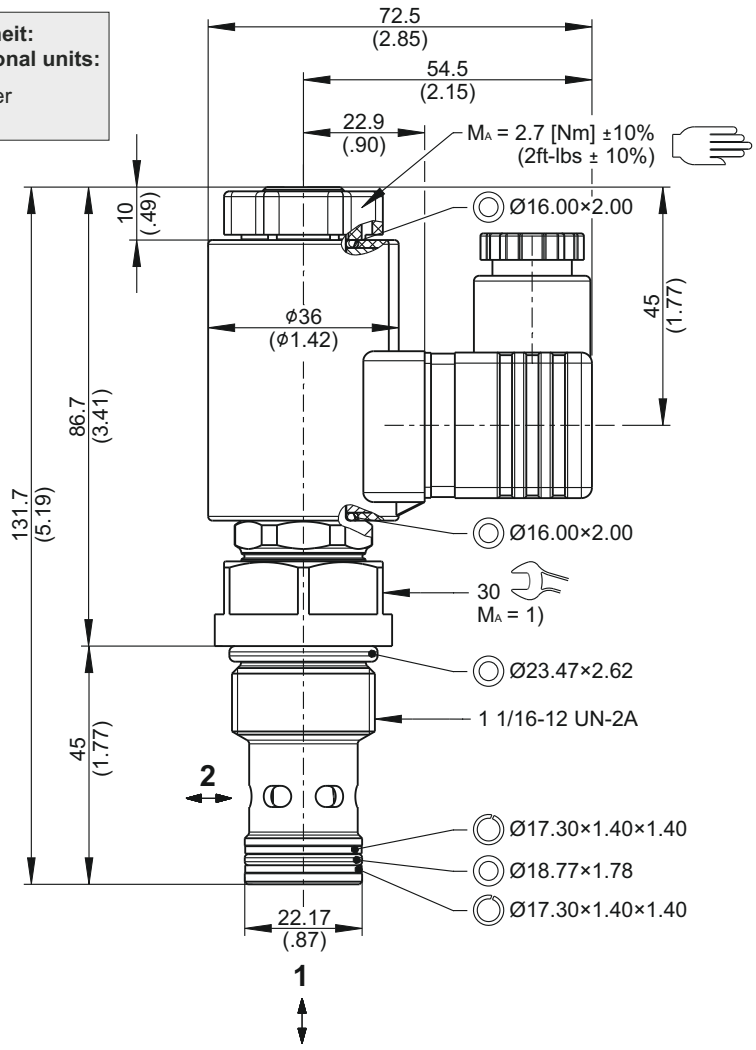

Installation information

IMPORTANT!
1) When fitting the screw-in cartridge valve, use the specified tightening torque. The value can be found in the chapter "Technical data".

ATTENTION!
Only qualified personnel with mechanical skills may carry out any maintenance work. Generally, the only work that should ever be undertaken is to check, and possibly replace, the seals. When changing seals, oil or grease the new seals thoroughly before fitting them.

NOTE!
The seals are not available individually. The seal kit order number can be found in the chapter "Technical data".

Ordering code

Ex. W S V N 22G - 10 F - N A 1 24 D _

W	=	directional valve
S	=	bidirectional seat-valve shut-off, seated design
V	=	pilot operated
N	=	electrically operated, V DC = 27 W / V AC = 25 W
22G	=	2-way/2-position, normally closed
10	=	nominal size 10 / SAE12
F	=	cavity type HF/C1220A
N	=	NBR (nitril-butadien-rubber / BUNA) seals **(standard)**
V	=	FKM (fluorocarbon rubber / VITON) seals (special seals on request)
A ... Q	=	standard model according to valid data sheet
Z ... R	=	special model (on request)
1 ... 9	=	technical design no. (omit by ordering)
…	=	voltage e.g. 24 (24 V)
D	=	current DC
A	=	current AC

(blank)	=	DIN EN 175301-803 connection	3-pole 2 P+E **(standard)**	(IP 65)	with mating plug
T	=	DIN EN 175301-803 connection	3-pole 2 P+E, with protection diode	(IP 65)	with mating plug
M100	=	DIN EN 175301-803 connection	3-pole 2 P+E	(IP 65)	mating plug not supplied
J	=	Junior Timer plug connection	2-pole radial	(IP 65)	
JT	=	Junior Timer plug connection	2-pole radial, with protection diode	(IP 65)	
I	=	Junior Timer plug connection	2-polig axial	(IP 65)	
IT	=	Junior Timer plug connection	2-polig axial, with protection diode	(IP 65)	
D	=	Deutsch plug connection DT04-2P	2-pole 45°	(IP 67/69K)	
DT	=	Deutsch plug connection DT04-2P	2-pole 45°, with protection diode	(IP 67/69K)	
		other plug-variants, please consult BUCHER.			

IMPORTANT!
Not every combination of voltage values, current type and plug connections vailable.

Related data sheets

Reference	Description
400-P-065111	Cavity HF/C1220A
400-P-120110	Solenoid coil D36
400-P-010101	MTTFd Values for Hydraulic Valves

info.ch@bucherhydraulics.com **www.bucherhydraulics.com**

© 2025 by Bucher Hydraulics AG Frutigen, 3714 Frutigen, Switzerland

All rights reserved.
Data is provided for the purpose of product description only, and must not be construed as warranted characteristics in the legal sense. The information does not relieve users from the duty of conducting their own evaluations and tests. Because the products are subject to continual improvement, we reserve the right to amend the product specifications contained in this catalogue.

BUCHER hydraulics

WWW.SUMY.IR

Directional valve 2-way/2-position

Q_{max} = 350 l/min, p_{max} = 420 bar
Pilot operated, poppet type, switching solenoid
Type series: WS22G_BB-16...

- Screw-in cartridge valve for cavity EB
- All external parts with zinc-nickel plating according to DIN EN ISO 19598
- Installation in threaded port body type GEBAA
- With bidirectional seat-valve shut-off
- No external pilot drain required
- Low head loss
- High flow rates
- De-energized closed
- The slip-on coil can be rotated, and it can be replaced without opening the hydraulic envelope
- High pressure wet-armature solenoids
- Various plug-connector systems and voltages are available

Symbol

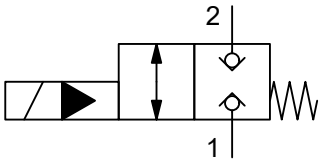

Description

The 2-way/2-position solenoid operated directional valves, series WS22G..., are size 16 two-stage, high performance screw−in valves with an M42×2 mounting thread for cavity type EB. The main and pilot stages are both designed on the poppet/seat principle, and they are therefore virtually leak−free in both directions of flow (bidirectional seat−valve shut−off). These valves can be supplied with a low−watt coil (nominal power consumption 8 W). The straightforward design delivers an outstanding price/performance ratio and good pressure/flow ratings. All external parts of the screw-in valves are zinc-nickel plated and are thus suitable for use in the harshest operating environments. The slip-on coils can be replaced without opening the hydraulic envelope and can be positioned at any angle through 360°. These screw-in cartridges are predominantly used in certain mobile and industrial applications where leak-tight shut-off functions are crucially important. Examples are where loads, tensions, or clamping forces must be held without leakage. For self-assembly, please refer to the section related data sheets.

WWW.SUMY.IR

Technical data

General characteristics	Description, value, unit
Function group	directional valve
Function	2-way/2-position
Design	screw-in cartridge valve
Controls	switching solenoid
Characteristic	pilot operated, poppet type
Construction size	NG 16
Thread size	M42×2
Mounting attitude	unrestricted
Weight	1.20 kg
Cavity acc. ISO	fits into ISO 7789: 42-06-0-07
Cavity acc. factory standard	EB
Tightening torque steel	200 Nm
Tightening torque aluminium	200 Nm
Tightening torque tolerance	± 10 %
Minimum ambient temperature	- 30 °C
Maximum ambient temperature	+ 50 °C
Surface protection	all external parts with zinc-nickel plating according to DIN EN ISO 19598
Sealing material	see ordering code
Seal kit order number	NBR: DS-351-N / FKM: DS-351-V

Hydraulic characteristics	Description, value, unit
Maximum operating pressure	420 bar
Maximum flow rate	350 l/min
Flow direction	see symbol
Hydraulic fluid	HL and HLP mineral oil according to DIN 51 524; other fluids on request!
Minimum fluid temperature	- 30 °C
Maximum fluid temperature	+ 80 °C
Viscosity range	10 ... 500 mm^2/s (cSt)
Recommended viscosity range	15 ... 250 mm^2/s (cSt)
Minimum fluid cleanliness (cleanlineless class according to ISO 4406:1999)	class 20/18/15

Electric characteristics	Description, value, unit
Actuator type	solenoid coil
Solenoid coils type	D36
Supply voltage DC	12/24 V DC
Supply voltage AC	115/230 (50 ... 60 Hz) V AC
Supply voltage tolerance	± 10 %
Nominal power consumption	V DC = 27 W / V AC = 25 W (V DC = 8 W = WS22_L) W
Relative duty cycle	100 %
Electrical connection coil	several connection types available, see ordering code
Protection class solenoid coil to ISO 20 653 / EN 60 529	several classes of protection available, see ordering code (with appropriate mating connector and proper fitting and sealing)

Performance graphs

measured with oil viscosity 33.0 mm²/s (cSt), coil at steady-state temperature and 10 % undervoltage

p = f (Q) Performance limit

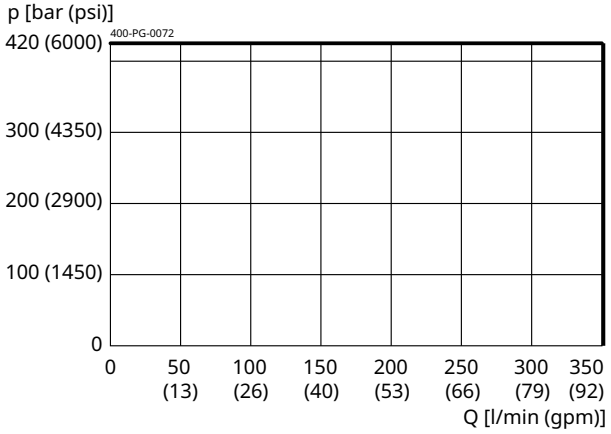

Δp = f (Q) Pressure drop-flow rate characteristic

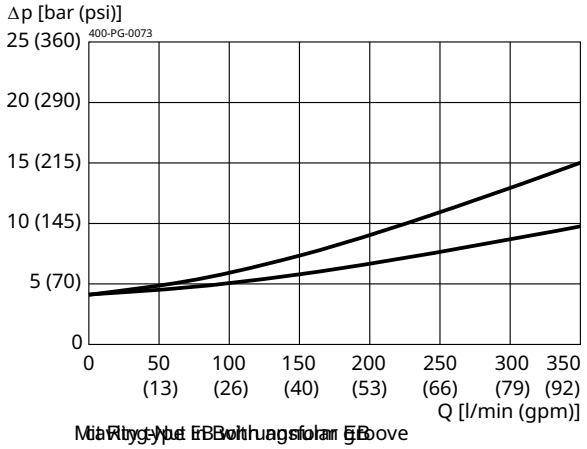

Mating type EB with angular groove
1) 1 → 2
2) 2 → 1

Δp = f (Q) Pressure drop-flow rate characteristic

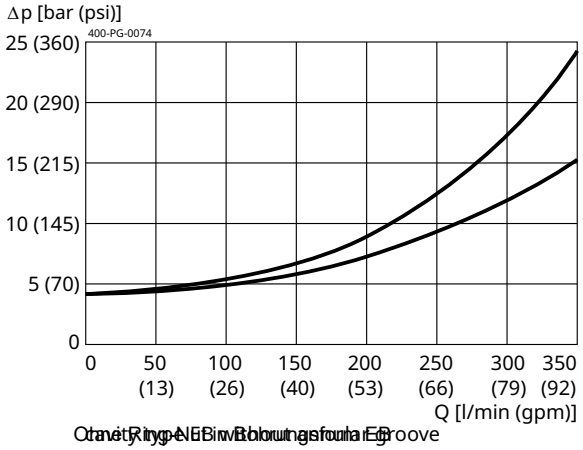

Mating type EB with angular groove
1) 1 → 2
2) 2 → 1

WWW.SUMY.IR

Installation

Beispiel für die Masseinheit:
Exampel for the dimensional units:

0.79	= 0.79 mm	millimeter
(.031)	= 0.031"	inch

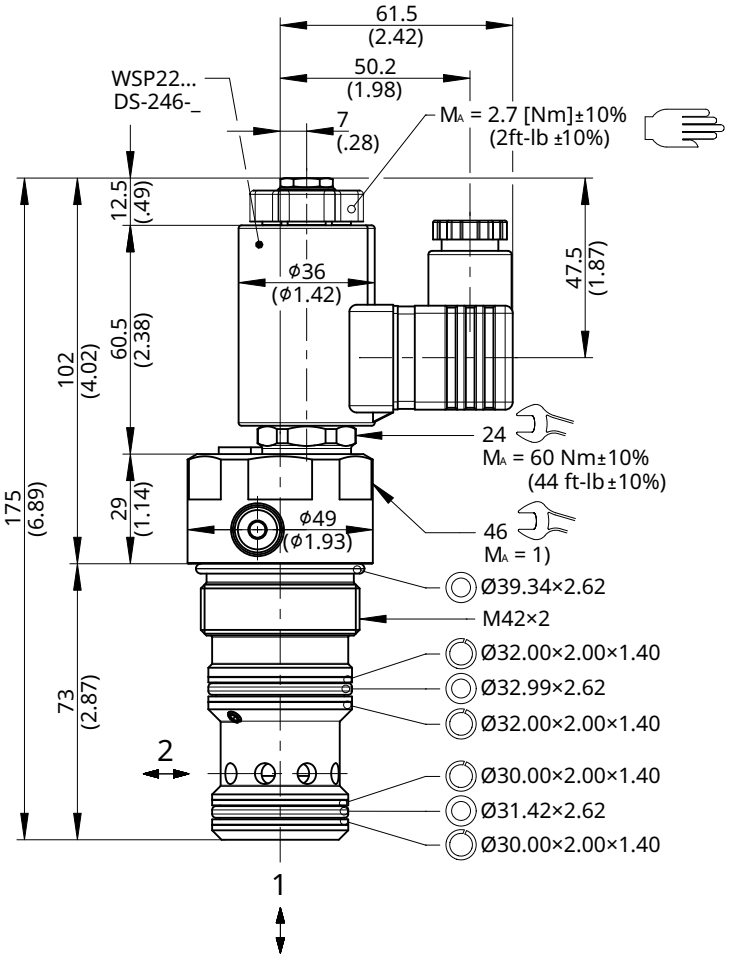

IMPORTANT!
1) When fitting the screw-in cartridge valve, use the specified tightening torque. The value can be found in the chapter "Technical data".

ATTENTION!
Only qualified personnel with mechanical skills may carry out any maintenance work. Generally, the only work that should ever be undertaken is to check, and possibly replace, the seals. When changing seals, oil or grease the new seals thoroughly before fitting them.

Ordering code

Ex. W S 22 G N B B - 16 _ - 3 24 D _

W	=	directional valve
S	=	bidirectional seat-valve shut-off, seated design
22	=	2-way/2-position function
G	=	de-energized closed
N	=	electrically operated, V DC = 27 W / V AC = 25 W
L	=	electrically operated, D36, 8 W *
B	=	cavity type EB
A ... Q	=	standard model according to valid data sheet
Z ... R	=	special model (on request)
16	=	nominal size 16
(blank)	=	NBR (nitril-butadien-rubber / BUNA) seals **(standard)**
V	=	FKM (fluorocarbon rubber / VITON) seals * (special seals on request)
1 ... 9	=	technical design no. (omit by ordering)
...	=	voltage e.g. 24 (24 V)
D	=	current DC
A	=	current AC

(blank)	=	DIN EN 175301-803 connection	3-pole 2 P+E **(standard)**	(IP 65)	with mating plug
T	=	DIN EN 175301-803 connection	3-pole 2 P+E, with protection diode	(IP 65)	with mating plug
M100	=	DIN EN 175301-803 connection	3-pole 2 P+E	(IP 65)	mating plug not supplied
J	=	Junior Timer plug connection	2-pole radial	(IP 65)	mating plug not supplied
JT	=	Junior Timer plug connection	2-pole radial, with protection diode	(IP 65)	mating plug not supplied
I	=	Junior Timer plug connection	2-pole axial	(IP 65)	mating plug not supplied
IT	=	Junior Timer plug connection	2-pole axial, with protection diode	(IP 65)	mating plug not supplied
D	=	Deutsch plug connection DT04-2P	2-pole 45°	(IP 67/69K)	mating plug not supplied
DT	=	Deutsch plug connection DT04-2P	2-pole 45°, with protection diode	(IP 67/69K)	mating plug not supplied

other plug-variants, please consult BUCHER.

IMPORTANT!
Not every combination of voltage values, current type and plug connections vailable.

IMPORTANT!
* = In the WS22GLBB-16V-... with 8-Watt coil, the piston of the pilot valve WSP22GLA1V-... is also in the FKM (Viton) version fitted with an NBR O-ring.

Related data sheets

Reference	Description
400-P-040011	form tools
400-P-120110	solenoid coil D36
400-P-080111	cavity EB
400-P-750115	threaded port body GEBAA

info.ch@bucherhydraulics.com **www.bucherhydraulics.com**

© 2026 by Bucher Hydraulics AG Frutigen, 3714 Frutigen, Switzerland

All rights reserved.
Data is provided for the purpose of product description only, and must not be construed as warranted characteristics in the legal sense. The information does not relieve users from the duty of conducting their own evaluations and tests. Because the products are subject to continual improvement, we reserve the right to amend the product specifications contained in this catalogue.

BUCHER hydraulics

WWW.SUMY.IR

Directional valve 2-way/2-position

Q_{max} = 5 l/min, p_{max} = 420 bar
switching solenoid, direct acting, poppet type
Type series: WSP22OLA1...

- Screw-in cartridge valve
- For cavity AL
- All external parts with zinc-nickel plating according to DIN EN ISO 19598
- Can be used as a high-pressure pilot valve
- With bidirectional seat-valve shut-off
- Low head loss
- Compact construction
- Installation in threaded port body type GALA
- De-energized open
- "Low watt" version
- The slip-on coil can be rotated, and it can be replaced without opening the hydraulic envelope
- High pressure wet-armature solenoids
- Various plug-connector systems and voltages are available

Description

The 2-way/2-position solenoid operated directional seat valves, series WSP22O..., are size 1, pressure balanced screw-in valves with a 3/4-16 UNF mounting thread. They are designed on the poppet/seat principle, and are therefore virtually leak-free in both directions of flow (bidirectional seat-valve shut-off). They are fitted with a low-watt coil (nominal power consumption 8 W). The straightforward design delivers an outstanding price/ performance ratio. All external parts of the screw-in valves are zinc-nickel plated, and are thus suitable for use in the harshest operating environments. The slip-on coils can be replaced without opening the hydraulic envelope and can be positioned at any angle through 360°. These valves are primarily used as pilot valves in certain mobile and industrial applications where leak-tight shut-off functions are crucially important. Examples are where loads, tensions, or clamping forces must be held without leakage. For self-assembly, please refer to the section related data sheets.

Symbol

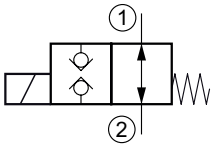

Technical data

General characteristics	Description, value, unit
Function group	Directional valve
Function	2-way/2-position
Design	Screw-in cartridge valve
Controls	switching solenoid
Characteristic	direct acting, poppet type
Construction size	NG 1
Thread size	3/4-16 UNF-2A
Mounting attitude	unrestricted
Weight	0.40 kg
Cavity acc. factory standard	For cavity AL
Tightening torque steel	60 Nm
Tightening torque aluminium	60 Nm
Tightening torque tolerance	± 10 %
Minimum ambient temperature	- 25 °C
Maximum ambient temperature	+ 50 °C
Surface protection	All external parts with zinc-nickel plating according to DIN EN ISO 19598
Sealing material	see ordering code
Seal kit order number	NBR: DS-246-N / FKM: DS-246-V

Hydraulic characteristics	Description, value, unit
Maximum operating pressure	420 bar
Maximum flow rate	5 l/min
Flow direction	see symbol
Hydraulic fluid	HL and HLP mineral oil according to DIN 51 524; other fluids on request!
Minimum fluid temperature	- 25 °C
Maximum fluid temperature	+ 80 °C
Viscosity range	10 ... 500 mm^2/s (cSt)
Recommended viscosity range	15 ... 250 mm^2/s (cSt)
Minimum fluid cleanliness (cleanlineless class according to ISO 4406:1999)	class 20/18/15

Electric characteristics	Description, value, unit
Actuator type	solenoid coil
Solenoid coils type	D36
Supply voltage DC	12/24 V DC
Maximum permissible power consumption	8 W
Relative duty cycle	100 %
Electrical connection coil	several connection types available, see ordering code
Protection class solenoid coil to ISO 20 653 / EN 60 529	IP 65 / IP 67 / IP 69K, see “Ordering code” (with appropriate mating connector and proper fitting and sealing)

Performance graphs

measured with oil viscosity 33.0 mm²/s (cSt), coil at steady-state temperature and 10 % undervoltage

p = f (Q) Performance limit

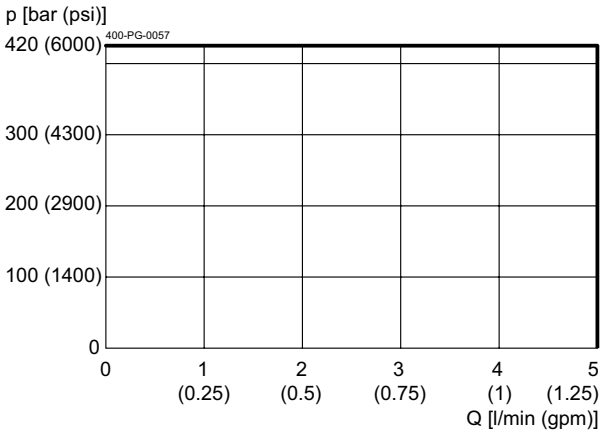

Δp = f (Q) Pressure drop-flow rate characteristic

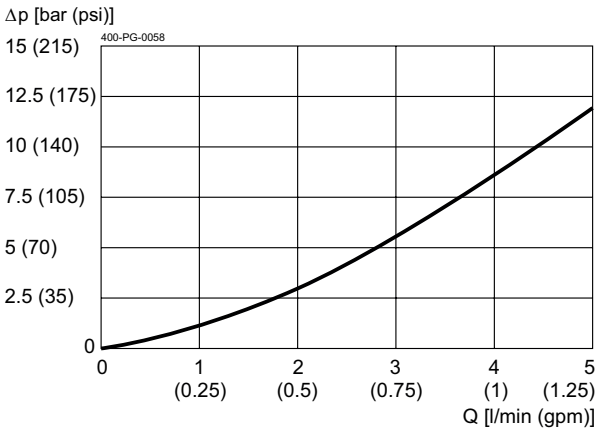

Dimensions and sectional view

Beispiel für die Masseinheit:
Example for the dimensional units:

0.79 = 0.79 mm millimeter
(.031) = 0.031" inch

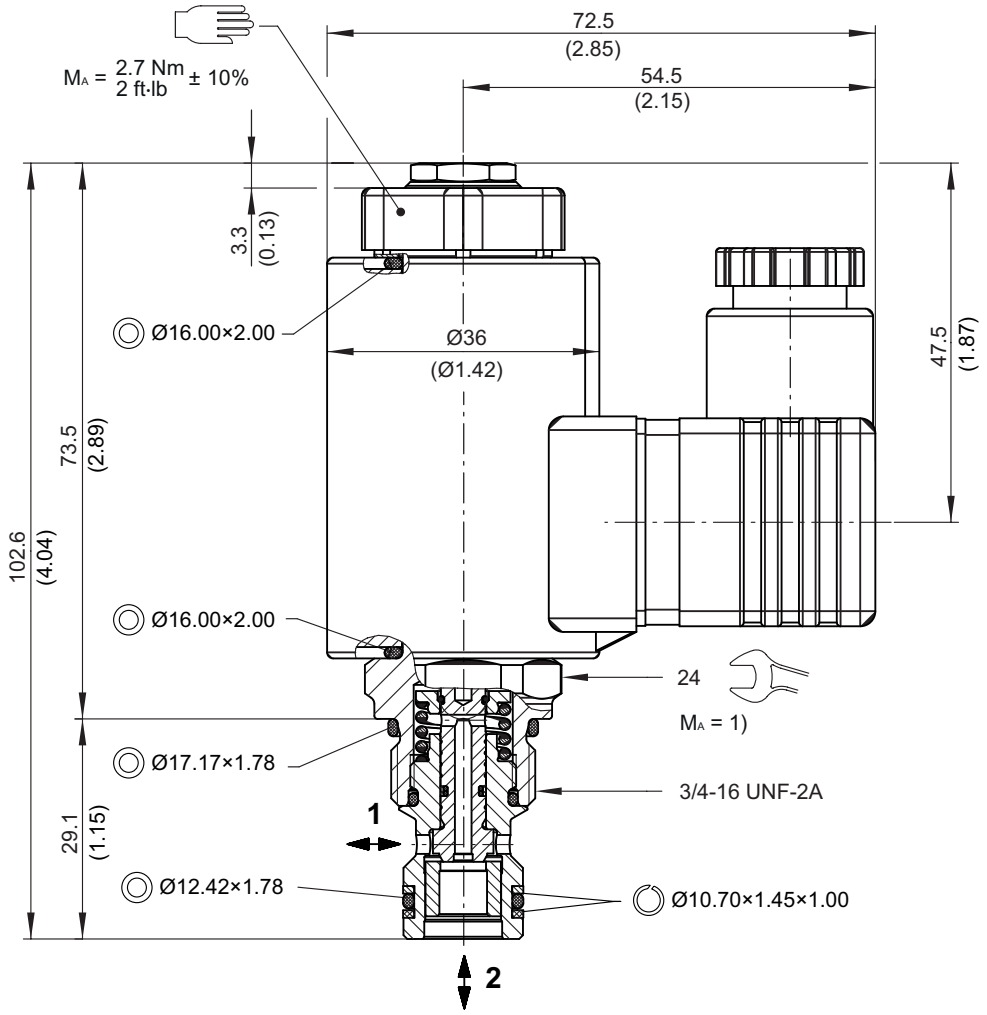

Installation information

IMPORTANT!
1) When fitting the screw-in cartridge valve, use the specified tightening torque. The value can be found in the chapter "Technical data".

ATTENTION!
Only qualified personnel with mechanical skills may carry out any maintenance work. Generally, the only work that should ever be undertaken is to check, and possibly replace, the seals. When changing seals, oil or grease the new seals thoroughly before fitting them.

Ordering code

Ex. W S P 22O L A 1 _ - 3 24 D _

W	=	directional valve
S	=	seat valve, direct acting
P	=	high-pressure model, 420 bar
22O	=	2-way/2-position function, de-energized open
L	=	electrically operated, VDC = 8 W
A ... Q	=	standard model - see relevant data sheets
Y ... R	=	special features - please consult BUCHER
1	=	nominal size 1 (primarily for pilot controls)
(blank)	=	NBR (nitril-butadien-rubber / BUNA) seals **(standard)**
V	=	FKM (fluorocarbon rubber / VITON) seals *(special seals - please contact BUCHER)*
1 ... 9	=	design stage (omit when ordering)
...	=	voltage e.g. 24 (24 V)
D	=	current DC
(blank)	=	DIN EN 175301-803 connection, 3-pole 2 P+E with mating plug, IP 65 **(standard)**
M100	=	DIN EN 175301-803 connection, 3-pole 2 P+E *for the following plug-variants, please consult Bucher:*
C	=	Kostal plug connection (IP 65)
JT	=	Junior Timer radial plug connection (with protection diode, IP65)
IT	=	Junior Timer axial plug connection (with protection diode, IP65)
D	=	Deutsch plug connection DT04-2P (IP 67/69K)
DT	=	Deutsch plug connection DT04-2P (with protection diode, IP 67/69K)
S	=	AMP Superseal 1.5 (IP 67) / Metri-Pack 150 (IP 65)
F	=	flying leads (500 mm)

mating plug not supplied

Related data sheets

Reference	Description
400-P-040011	Form tools
400-P-120110	Solenoid coil D36
400-P-040171	Cavity AL
400-P-720101	Threaded port body GALA

info.ch@bucherhydraulics.com **www.bucherhydraulics.com**

© 2023 by Bucher Hydraulics AG Frutigen, 3714 Frutigen, Switzerland

All rights reserved.
Data is provided for the purpose of product description only, and must not be construed as warranted characteristics in the legal sense. The information does not relieve users from the duty of conducting their own evaluations and tests. Because the products are subject to continual improvement, we reserve the right to amend the product specifications contained in this catalogue.

BUCHER hydraulics

WWW.SUMY.IR

Directional valve 2-way/2-position

Q_{max} = 15 l/min, p_{max} = 420 bar
switching solenoid, direct acting, poppet type
Type series: WSP22ONA3...

- Screw-in cartridge valve
- For cavity AL
- All external parts with zinc-nickel plating according to DIN EN ISO 19598
- Can be used as a high-pressure pilot valve
- With bidirectional seat-valve shut-off
- Low head loss
- Compact construction
- Installation in threaded port body type GALA
- De-energized open
- "Low watt" version
- The slip-on coil can be rotated, and it can be replaced without opening the hydraulic envelope
- High pressure wet-armature solenoids
- Various plug-connector systems and voltages are available

Description

The 2-way/2-position solenoid operated directional seat valves, series WSP22O..., are size 3, pressure balanced screw-in valves with a 3/4-16 UNF mounting thread. They are designed on the poppet/seat principle, and are therefore virtually leak-free in both directions of flow (bidirectional seat-valve shut-off). They are fitted with a low-watt coil (nominal power consumption 8 W). The straightforward design delivers an outstanding price/ performance ratio. All external parts of the screw-in valves are zinc-nickel plated, and are thus suitable for use in the harshest operating environments. The slip-on coils can be replaced without opening the hydraulic envelope and can be positioned at any angle through 360°. These valves are primarily used as pilot valves in certain mobile and industrial applications where leak-tight shut-off functions are crucially important. Examples are where loads, tensions, or clamping forces must be held without leakage. For self-assembly, please refer to the section related data sheets.

Symbol

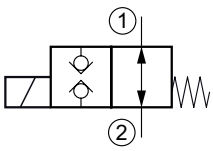

Technical data

General characteristics	Description, value, unit
Function group	Directional valve
Function	2-way/2-position
Design	Screw-in cartridge valve
Controls	switching solenoid
Characteristic	direct acting, poppet type
Construction size	NG 3
Thread size	3/4-16 UNF-2A
Mounting attitude	unrestricted
Weight	0.4 kg
Cavity acc. factory standard	For cavity AL
Tightening torque steel	60 Nm
Tightening torque aluminium	60 Nm
Tightening torque tolerance	± 10 %
Minimum ambient temperature	- 25 °C
Maximum ambient temperature	+ 50 °C
Surface protection	All external parts with zinc-nickel plating according to DIN EN ISO 19598
Sealing material	see ordering code
Seal kit order number	NBR: DS-246-N / FKM: DS-246-V

Hydraulic characteristics	Description, value, unit
Maximum operating pressure	420 bar
Maximum flow rate	15 l/min
Flow direction	see symbol
Hydraulic fluid	HL and HLP mineral oil according to DIN 51 524; other fluids on request!
Minimum fluid temperature	- 25 °C
Maximum fluid temperature	+ 80 °C
Viscosity range	10 ... 500 mm^2/s (cSt)
Recommended viscosity range	15 ... 250 mm^2/s (cSt)
Minimum fluid cleanliness (cleanlineless class according to ISO 4406:1999)	class 20/18/15

Electric characteristics	Description, value, unit
Actuator type	solenoid coil
Solenoid coils type	D36
Supply voltage DC	12 V DC
Supply voltage AC	115 V AC
Supply voltage tolerance	± 10 %
Maximum permissible power consumption	V DC = 27 W / V AC = 25 W
Relative duty cycle	100 %
Electrical connection coil	several connection types available, see ordering code
Protection class solenoid coil to ISO 20 653 / EN 60 529	IP 65 / IP 67 / IP 69K, see “Ordering code” (with appropriate mating connector and proper fitting and sealing)

Performance graphs

measured with oil viscosity 33.0 mm²/s (cSt), coil at steady-state temperature and 10 % undervoltage

p = f (Q) Performance limit

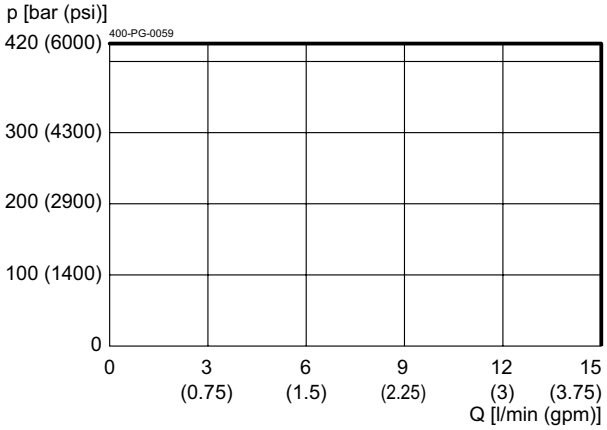

Δp = f (Q) Pressure drop-flow rate characteristic

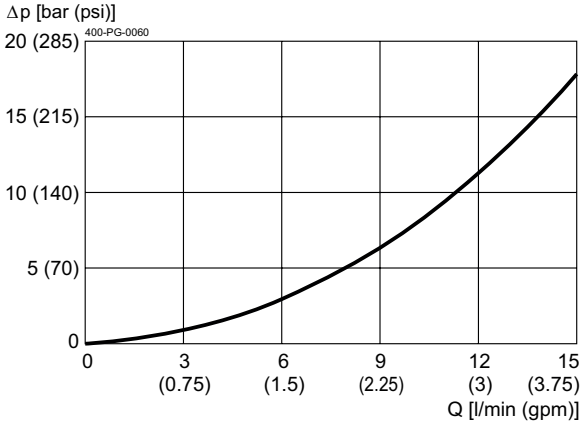

1) 1 → 2 / 2 → 1

Dimensions and sectional view

Beispiel für die Masseinheit:
Example for the dimensional units:

0.79 = 0.79 mm millimeter
(.031) = 0.031" inch

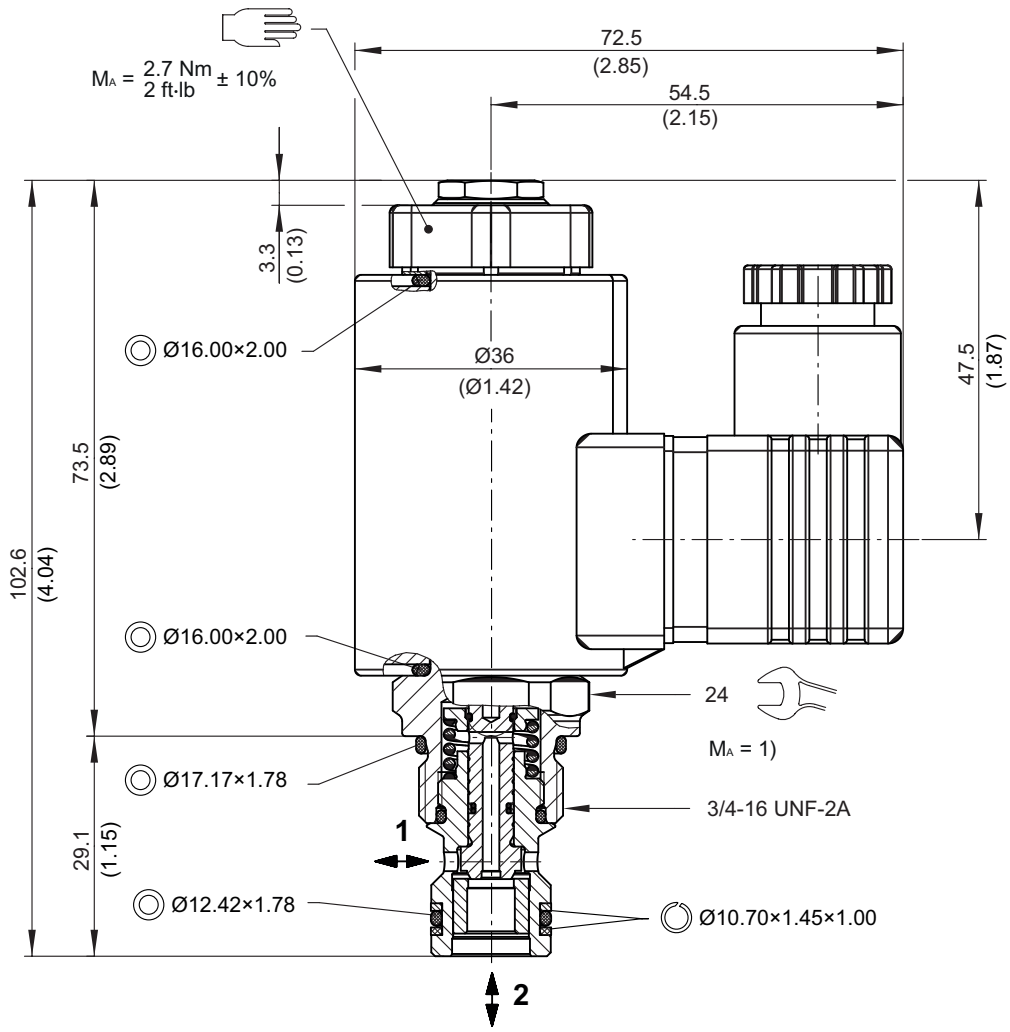

Installation information

IMPORTANT!
1) When fitting the screw-in cartridge valve, use the specified tightening torque. The value can be found in the chapter "Technical data".

ATTENTION!
Only qualified personnel with mechanical skills may carry out any maintenance work. Generally, the only work that should ever be undertaken is to check, and possibly replace, the seals. When changing seals, oil or grease the new seals thoroughly before fitting them.

Ordering code

Ex. W S P 22O N A 3 _ - 3 24 D _

W	=	directional valve
S	=	seat valve, direct acting
P	=	high-pressure model, 420 bar
22O	=	2-way/2-position function, de-energized open
N	=	electrically operated, V DC = 27 W / V AC = 25 W
A ... Q	=	standard model - see relevant data sheets
Y ... R	=	special features - please consult BUCHER
3	=	nominal size 3 *(primarily for pilot controls)*
(blank)	=	NBR (nitril-butadien-rubber / BUNA) seals **(standard)**
V	=	FKM (fluorocarbon rubber / VITON) seals *(special seals - please contact BUCHER)*
1 ... 9	=	design stage *(omit when ordering)*
...	=	voltage e.g. 24 (24 V)
D	=	current DC
A	=	current AC
(blank)	=	DIN EN 175301-803 connection, 3-pole 2 P+E with mating plug, IP 65 **(standard)**
M100	=	DIN EN 175301-803 connection, 3-pole 2 P+E *for the following plug-variants, please consult Bucher:*
C	=	Kostal plug connection (IP 65)
JT	=	Junior Timer radial plug connection (with protection diode, IP65)
IT	=	Junior Timer axial plug connection (with protection diode, IP65)
D	=	Deutsch plug connection DT04-2P (IP 67/69K)
DT	=	Deutsch plug connection DT04-2P (with protection diode, IP 67/69K)
S	=	AMP Superseal 1.5 (IP 67) / Metri-Pack 150 (IP 65)
F	=	flying leads (500 mm)

mating plug not supplied

Related data sheets

Reference	Description
400-P-040011	Form tools
400-P-120110	Solenoid coil D36
400-P-040171	Cavity AL
400-P-720101	Threaded port body GALA

info.ch@bucherhydraulics.com
www.bucherhydraulics.com

© 2023 by Bucher Hydraulics AG Frutigen, 3714 Frutigen, Switzerland

All rights reserved.
Data is provided for the purpose of product description only, and must not be construed as warranted characteristics in the legal sense. The information does not relieve users from the duty of conducting their own evaluations and tests. Because the products are subject to continual improvement, we reserve the right to amend the product specifications contained in this catalogue.

BUCHER hydraulics

WWW.SUMY.IR

Directional valve 2-way/2-position

Q_{max} = 30 l/min, p_{max} = 250 bar
switching solenoid with emergency override, direct acting, poppet type
Type series: WS22ONA5...

- Screw-in cartridge valve
- For cavity AL
- All external parts with zinc-nickel plating according to DIN EN ISO 19598
- With bidirectional seat-valve shut-off
- Low head loss
- High flow rates
- Compact construction
- Installation in threaded port body type GALA
- De-energized open
- The slip-on coil can be rotated, and it can be replaced without opening the hydraulic envelope
- High pressure wet-armature solenoids
- Various plug-connector systems and voltages are available

Description

The 2-way/2-position solenoid-operated directional valves, series WS22..., are size 5, direct acting poppet type screw-in valves with a 3/4-16-UNF mounting thread. They are designed on the poppet/seat principle, and are therefore virtually leak-free in both directions of flow (bidirectional seat-valve shut-off). All external parts of the screw-in valves are zinc-nickel plated, and are thus suitable for use in the harshest operating environments. The slip-on coils can be replaced without opening the hydraulic envelope and can be positioned at any angle through 360°. These screw-in valves are predominantly used in certain mobile and industrial applications where leak-tight shut-off functions are crucially important. Examples are where loads, tensions, or clamping forces must be held without leakage. For self-assembly, please refer to the section related data sheets.

Symbol

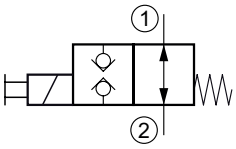

Technical data

General characteristics	Description, value, unit
Function group	Directional valve
Function	2-way/2-position
Design	Screw-in cartridge valve
Controls	switching solenoid with emergency override
Characteristic	direct acting, poppet type
Construction size	NG 5
Thread size	3/4-16 UNF-2A
Mounting attitude	unrestricted
Weight	0.35 kg
Cavity acc. factory standard	For cavity AL
Tightening torque steel	50 Nm
Tightening torque aluminium	50 Nm
Tightening torque tolerance	± 10 %
Minimum ambient temperature	- 25 °C
Maximum ambient temperature	+ 50 °C
Surface protection	All external parts with zinc-nickel plating according to DIN EN ISO 19598
Sealing material	see ordering code
Seal kit order number	NBR: DS-246-N / FKM-DS-246-V

Hydraulic characteristics	Description, value, unit
Maximum operating pressure	250 bar
Maximum flow rate	30 l/min
Flow direction	see symbol
Hydraulic fluid	HL and HLP mineral oil according to DIN 51 524; other fluids on request!
Minimum fluid temperature	- 25 °C
Maximum fluid temperature	+ 80 °C
Viscosity range	10 ... 500 mm^2/s (cSt)
Recommended viscosity range	15 ... 250 mm^2/s (cSt)
Minimum fluid cleanliness (cleanlineless class according to ISO 4406:1999)	class 20/18/15

Electric characteristics	Description, value, unit
Actuator type	solenoid coil
Solenoid coils type	D36
Supply voltage DC	12/24 V DC
Supply voltage AC	115/230 (50 ... 60 Hz) V AC
Supply voltage tolerance	± 10 %
Maximum permissible power consumption	VAC: 25, VDC: 27 W
Switching time	30...200 ms (energizing), 20...70 ms (de-energized)
Relative duty cycle	100 %
Electrical connection coil	several connection types available, see ordering code
Protection class solenoid coil to ISO 20 653 / EN 60 529	IP 65 / IP 67 / IP 69K, see “Ordering code” (with appropriate mating connector and proper fitting and sealing)

NOTE!
The switching time can be strongly influenced by flow rate, pressure, viscosity, and the dwell period under pressure. In practice, the switching time may therefore deviate from the specified value range.

Performance graphs

measured with oil viscosity 33.0 mm²/s (cSt), coil at steady-state temperature and 10 % undervoltage

p = f (Q) Performance limit

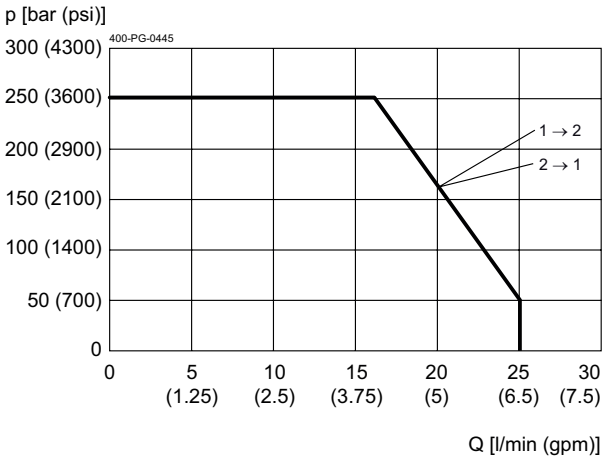

Δp = f (Q) Pressure drop-flow rate characteristic

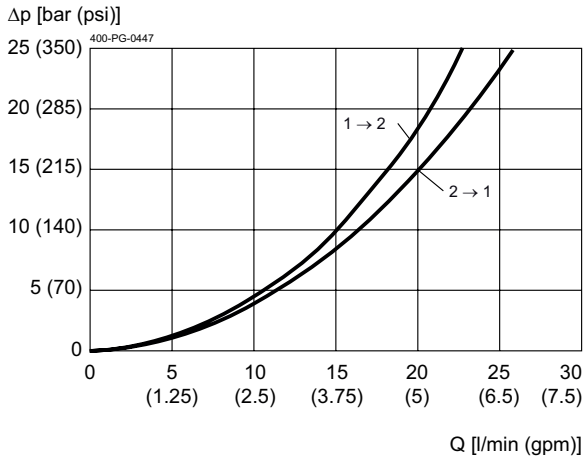

Dimensions and sectional view

Beispiel für die Masseinheit:
Example for the dimensional units:

0.79 = 0.79 mm millimeter
(.031) = 0.031" inch

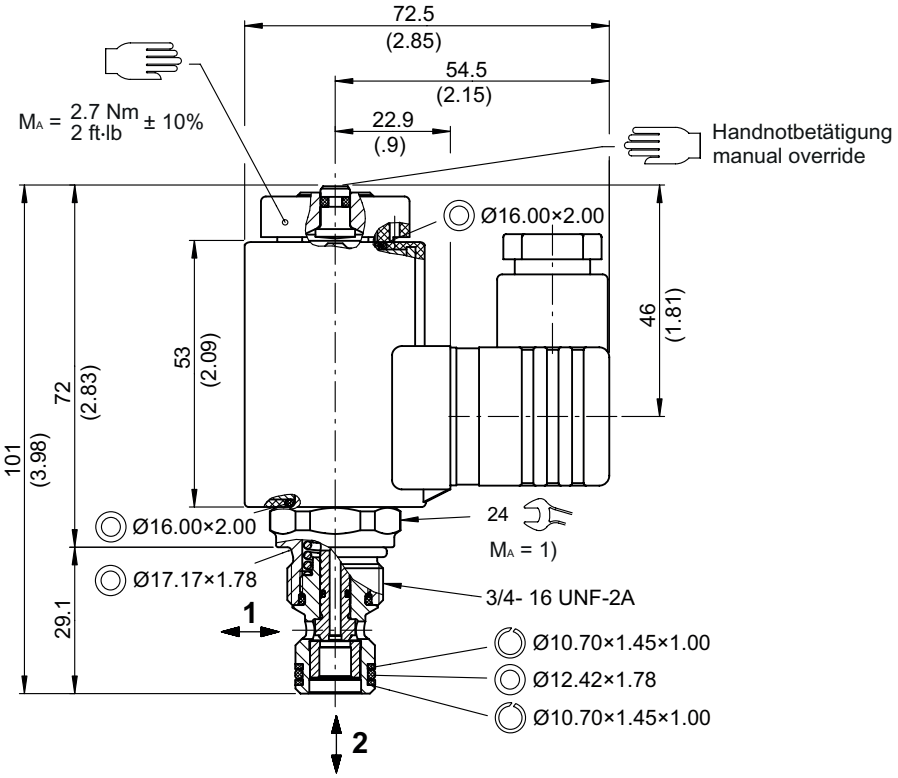

Installation information

ATTENTION!
Only qualified personnel with mechanical skills may carry out any maintenance work. Generally, the only work that should ever be undertaken is to check, and possibly replace, the seals. When changing seals, oil or grease the new seals thoroughly before fitting them.

IMPORTANT!
1) When fitting the screw-in cartridge valve, use the specified tightening torque. The value can be found in the chapter "Technical data".

Ordering code

Ex. W | S | 22O | N | A | 5 | _ | - | 3 | 24 | D | _

W	=	directional valve
S	=	seat valve, direct acting
22O	=	2/2 function, de-energized normally open
N	=	electrically operated, V DC = 27 W / V AC = 25 W
A	=	standard model - with thread 3/4-16 UNF-2A
5	=	nominal size 5
(blank)	=	NBR (nitril-butadien-rubber / BUNA) seals **(standard)**
V	=	FKM (fluorocarbon rubber / VITON) seals *(special seals - please contact BUCHER)*
1 ... 9	=	design stage (omit when ordering new units)
...	=	voltage e.g. 24 (24 V)
D	=	current DC
A	=	current AC
(blank)	=	DIN EN 175301-803 connection, 3-pole 2 P+E with mating plug, IP 65 **(standard)**
M100	=	DIN EN 175301-803 connection, 3-pole 2 P+E
C	=	Kostal plug connection (IP 65)
JT	=	Junior Timer radial plug connection (with protection diode, IP65)
IT	=	Junior Timer axial plug connection (with protection diode, IP65)
D	=	Deutsch plug connection 45° DT04-2P (IP 67/69K)
DT	=	Deutsch plug connection 45° DT04-2P (with protection diode, IP 67/69K)
S	=	AMP Superseal 1.5 (IP67) / Metri-Pack 150 (IP65) plug connection
F	=	flying leads (500 mm)

mating plug not supplied

Related data sheets

Reference	Description
400-P-040011	Form tools
400-P-120110	Solenoid coil D36
400-P-040171	Cavity AL
400-P-720101	Threaded port body GALA

info.ch@bucherhydraulics.com **www.bucherhydraulics.com**

© 2023 by Bucher Hydraulics AG Frutigen, 3714 Frutigen, Switzerland

All rights reserved.
Data is provided for the purpose of product description only, and must not be construed as warranted characteristics in the legal sense. The information does not relieve users from the duty of conducting their own evaluations and tests. Because the products are subject to continual improvement, we reserve the right to amend the product specifications contained in this catalogue.

BUCHER hydraulics

WWW.SUMY.IR

Directional valve 2-way/2-position

Q_{max} = 30 l/min, p_{max} = 250 bar
switching solenoid with emergency override, direct acting, poppet type
Type series: WS22ONZ5...

- Screw-in cartridge valve
- For cavity ALM
- All external parts with zinc-nickel plating according to DIN EN ISO 19598
- With bidirectional seat-valve shut-off
- Compact construction
- Installation in threaded port body type GALMA
- De-energized open
- The slip-on coil can be rotated, and it can be replaced without opening the hydraulic envelope
- High pressure wet-armature solenoids
- Various plug-connector systems and voltages are available

Description

The 2-way/2-position solenoid-operated directional valves, series WS22..., are size 5, direct acting poppet type screw-in valves with an M20x1,5 mounting thread. They are designed on the poppet/seat principle, and are therefore virtually leak-free in both directions of flow (bidirectional seat-valve shut-off). All external parts of the screw-in valves are zinc-nickel plated, and are thus suitable for use in the harshest operating environments. The slip-on coils can be replaced without opening the hydraulic envelope and can be positioned at any angle through 360°. These screw-in valves are predominantly used in certain mobile and industrial applications where leak-tight shut-off functions are crucially important. Examples are where loads, tensions, or clamping forces must be held without leakage. For self-assembly, please refer to the section related data sheets.

Symbol

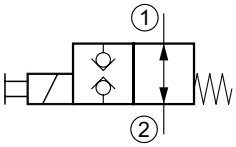

Technical data

General characteristics	Description, value, unit
Function group	Directional valve
Function	2-way/2-position
Design	Screw-in cartridge valve
Controls	switching solenoid with emergency override
Characteristic	direct acting, poppet type
Construction size	NG 5
Thread size	M20×1,5
Mounting attitude	unrestricted
Weight	0.35 kg
Cavity acc. factory standard	For cavity ALM
Tightening torque steel	50 Nm
Tightening torque aluminium	50 Nm
Tightening torque tolerance	± 10 %
Minimum ambient temperature	- 25 °C
Maximum ambient temperature	+ 50 °C
Surface protection	All external parts with zinc-nickel plating according to DIN EN ISO 19598
Sealing material	see ordering code
Seal kit order number	NBR: DS-245-N / FKM-DS-245-V

Hydraulic characteristics	Description, value, unit
Maximum operating pressure	250 bar
Maximum flow rate	30 l/min
Flow direction	see symbol
Hydraulic fluid	HL and HLP mineral oil according to DIN 51 524; other fluids on request!
Minimum fluid temperature	- 25 °C
Maximum fluid temperature	+ 80 °C
Viscosity range	10 ... 500 mm^2/s (cSt)
Recommended viscosity range	15 ... 250 mm^2/s (cSt)
Minimum fluid cleanliness (cleanlineless class according to ISO 4406:1999)	class 20/18/15

Electric characteristics	Description, value, unit
Actuator type	solenoid coil
Solenoid coils type	D36
Supply voltage DC	12/24 V DC
Supply voltage AC	115/230 (50 ... 60 Hz) V AC
Supply voltage tolerance	± 10 %
Maximum permissible power consumption	VAC: 25, VDC: 27 W
Switching time	30...200 ms (energizing), 20...70 ms (de-energized)
Relative duty cycle	100 %
Electrical connection coil	several connection types available, see ordering code
Protection class solenoid coil to ISO 20 653 / EN 60 529	IP 65 / IP 67 / IP 69K, see “Ordering code” (with appropriate mating connector and proper fitting and sealing)

NOTE!
The switching time can be strongly influenced by flow rate, pressure, viscosity, and the dwell period under pressure. In practice, the switching time may therefore deviate from the specified value range.

Performance graphs

measured with oil viscosity 33.0 mm²/s (cSt), coil at steady-state temperature and 10 % undervoltage

p = f (Q) Performance limit

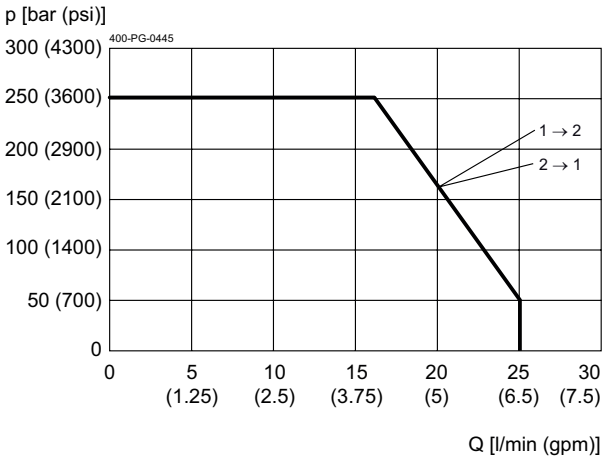

Δp = f (Q) Pressure drop-flow rate characteristic

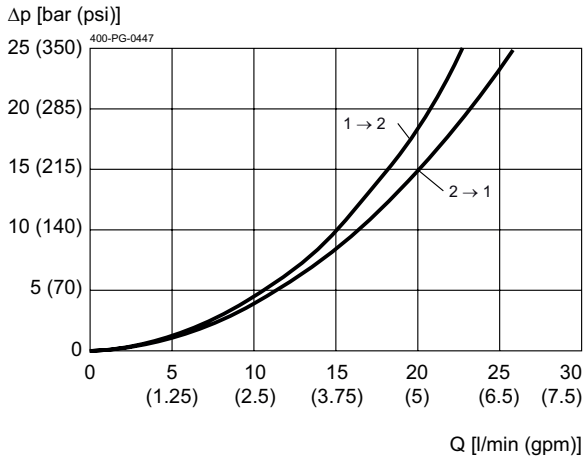

Dimensions and sectional view

Beispiel für die Masseinheit:
Example for the dimensional units:

0.79 = 0.79 mm millimeter
(.031) = 0.031" inch

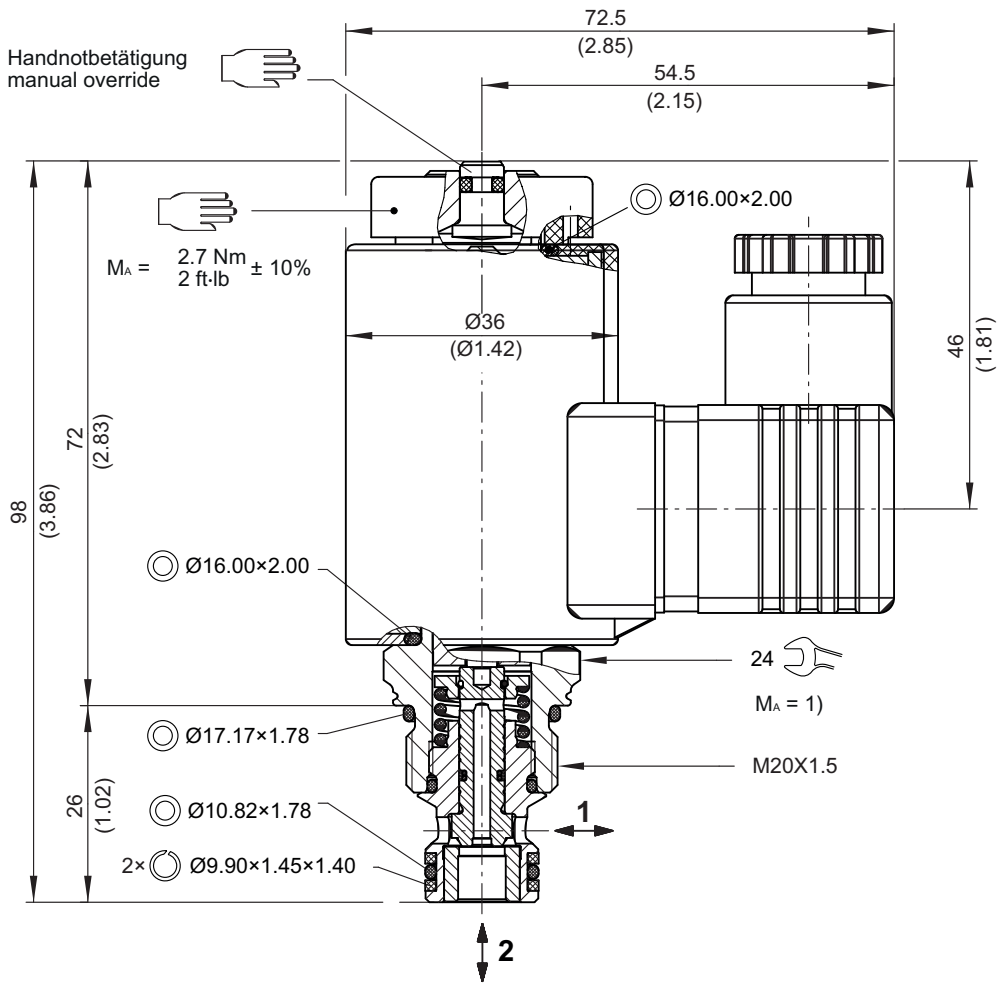

Installation information

ATTENTION!
Only qualified personnel with mechanical skills may carry out any maintenance work. Generally, the only work that should ever be undertaken is to check, and possibly replace, the seals. When changing seals, oil or grease the new seals thoroughly before fitting them.

IMPORTANT!
1) When fitting the screw-in cartridge valve, use the specified tightening torque. The value can be found in the chapter "Technical data".

Ordering code

Ex. W | S | 22O | N | Z | 5 | _ - 4 | 24 | D | _

W	=	directional valve
S	=	seat valve, direct acting
22O	=	2/2 function, de-energized normally open
N	=	electrically operated, V DC = 27 W / V AC = 25 W
Z	=	special features - with thread M20x1,5
5	=	nominal size 5
(blank)	=	NBR (nitril-butadien-rubber / BUNA) seals **(standard)**
V	=	FKM (fluorocarbon rubber / VITON) seals *(special seals - please contact BUCHER)*
1 ... 9	=	design stage (omit when ordering new units)
...	=	voltage e.g. 24 (24 V)
D	=	current DC
A	=	current AC
(blank)	=	DIN EN 175301-803 connection, 3-pole 2 P+E with mating plug, IP 65 **(standard)**
M100	=	DIN EN 175301-803 connection, 3-pole 2 P+E
C	=	Kostal plug connection (IP 65)
JT	=	Junior Timer radial plug connection (with protection diode, IP65)
IT	=	Junior Timer axial plug connection (with protection diode, IP65)
D	=	Deutsch plug connection 45° DT04-2P (IP 67/69K)
DT	=	Deutsch plug connection 45° DT04-2P (with protection diode, IP 67/69K)
S	=	AMP Superseal 1.5 (IP67) / Metri-Pack 150 (IP65) plug connection
F	=	flying leads (500 mm)

mating plug not supplied

Related data sheets

Reference	Description
400-P-040011	Form tools
400-P-120110	Solenoid coil D36
400-P-040201	Cavity ALM
400-P-720105	Threaded port body GALMA

info.ch@bucherhydraulics.com **www.bucherhydraulics.com**

© 2023 by Bucher Hydraulics AG Frutigen, 3714 Frutigen, Switzerland

All rights reserved.
Data is provided for the purpose of product description only, and must not be construed as warranted characteristics in the legal sense. The information does not relieve users from the duty of conducting their own evaluations and tests. Because the products are subject to continual improvement, we reserve the right to amend the product specifications contained in this catalogue.

BUCHER hydraulics
WWW.SUMY.IR

Directional valve 2-way/2-position

Q_{max} = 140 l/min, p_{max} = 350 bar
pilot operated, poppet type, switching solenoid
Type series: WS22ONCB-10...

- Screw-in cartridge valve
- For cavity DC
- All external parts with zinc-nickel plating according to DIN EN ISO 19598
- Installation in threaded port body type DC-12
- With bidirectional seat-valve shut-off
- High flow rates
- Compact construction
- Low head loss
- De-energized open
- The slip-on coil can be rotated, and it can be replaced without opening the hydraulic envelope
- High pressure wet-armature solenoids
- Various plug-connector systems and voltages are available

Phase-Out

Description

The 2-way/2-position solenoid-operated directional valves, series WS22..., are size 10, two stage, high performance screw-in valves with an M24×1.5 mounting thread. The main and pilot stages are both designed on the poppet/seat principle, and they are therefore virtually leak-free in both directions of flow (bidirectional seat-valve shut-off). All external parts of the screw-in valves are zinc-nickel plated and are thus suitable for use in the harshest operating environments. The slip-on coils can be replaced without opening the hydraulic envelope and can be positioned at any angle through 360°. These screw-in valves are predominantly used in certain mobile and industrial applications where leak-tight shut-off functions are crucially important. Examples are where loads, tensions, or clamping forces must be held without leakage. For self-assembly, please refer to the section related data sheets.

Symbol

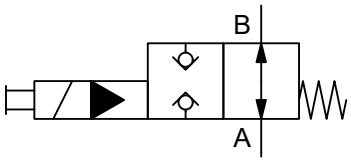

Technical data

General characteristics	Description, value, unit
Product status	Phase-Out
Alternative product	WSVN22O-10F... (400-P-131311)
Function group	Directional valve
Function	2-way/2-position
Design	Screw-in cartridge valve
Controls	switching solenoid
Characteristic	pilot operated, poppet type
MTTFd value	150 years
Construction size	NG 10
Thread size	M24×1,5
Mounting attitude	unrestricted
Weight	0.52 kg
Cavity acc. factory standard	For cavity DC
Tightening torque steel	100 Nm
Tightening torque aluminium	100 Nm
Tightening torque tolerance	± 10 %
Minimum ambient temperature	- 30 °C
Maximum ambient temperature	+ 80 °C
Surface protection	All external parts with zinc-nickel plating according to DIN EN ISO 19598
Sealing material	see ordering code
Seal kit order number	NBR: DS-281-N / FKM: DS-281-V

Hydraulic characteristics	Description, value, unit
Maximum operating pressure	350 bar
Maximum flow rate	140 l/min
Flow direction	see symbol
Hydraulic fluid	HL and HLP mineral oil according to DIN 51 524; other fluids on request!
Minimum fluid temperature	- 30 °C
Maximum fluid temperature	+ 80 °C
Viscosity range	10 ... 500 mm^2/s (cSt)
Recommended viscosity range	15 ... 250 mm^2/s (cSt)
Minimum fluid cleanliness (cleanlineless class according to ISO 4406:1999)	class 20/18/15

IMPORTANT!
The less favorable values from the general, hydraulic and electrical characteristics determine the temperature range of the whole valve.

IMPORTANT!
The maximum fluid temperature must not exceed the permissible ambient temperature for the whole valve.

Phase-Out

WWW.SUMY.IR

Electric characteristics	Description, value, unit
Actuator type	solenoid coil
Solenoid coils type	D36
Supply voltage DC	12/24 V DC
Supply voltage AC	115/230 (50 ... 60 Hz) V AC
Supply voltage tolerance	± 10 %
Nominal power consumption	V DC = 27 W / V AC = 25 W
Relative duty cycle	100 %
Minimum ambient temperature	- 30 °C
Maximum ambient temperature	+ 50 °C
Electrical connection coil	several connection types available, see ordering code
Protection class solenoid coil to ISO 20 653 / EN 60 529	several classes of protection available, see ordering code (with appropriate mating connector and proper fitting and sealing)

Performance graphs

measured with oil viscosity 33.0 mm²/s (cSt), coil at steady-state temperature and 10 % undervoltage

p = f (Q) Performance limit

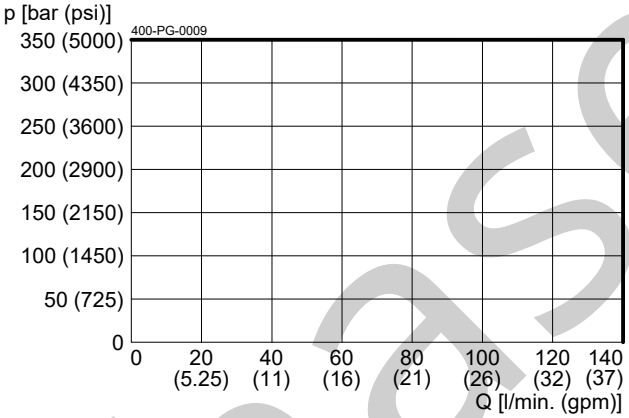

Δp = f (Q) Pressure drop-flow rate characteristic

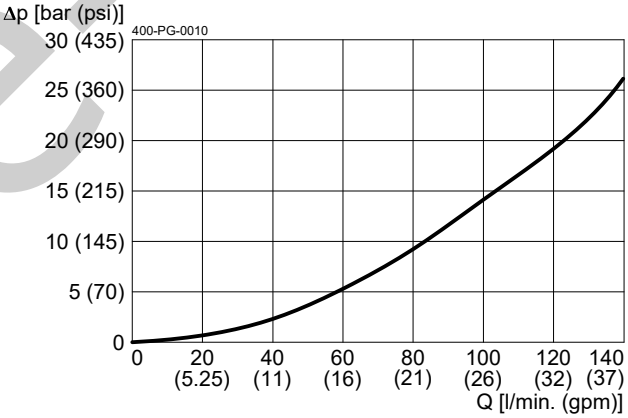

Phase-Out

Dimensions and sectional view

Beispiel für die Masseinheit:
Exampel for the dimensional units:

0.79	= 0.79 mm	millimeter
(.031)	= 0.031"	inch

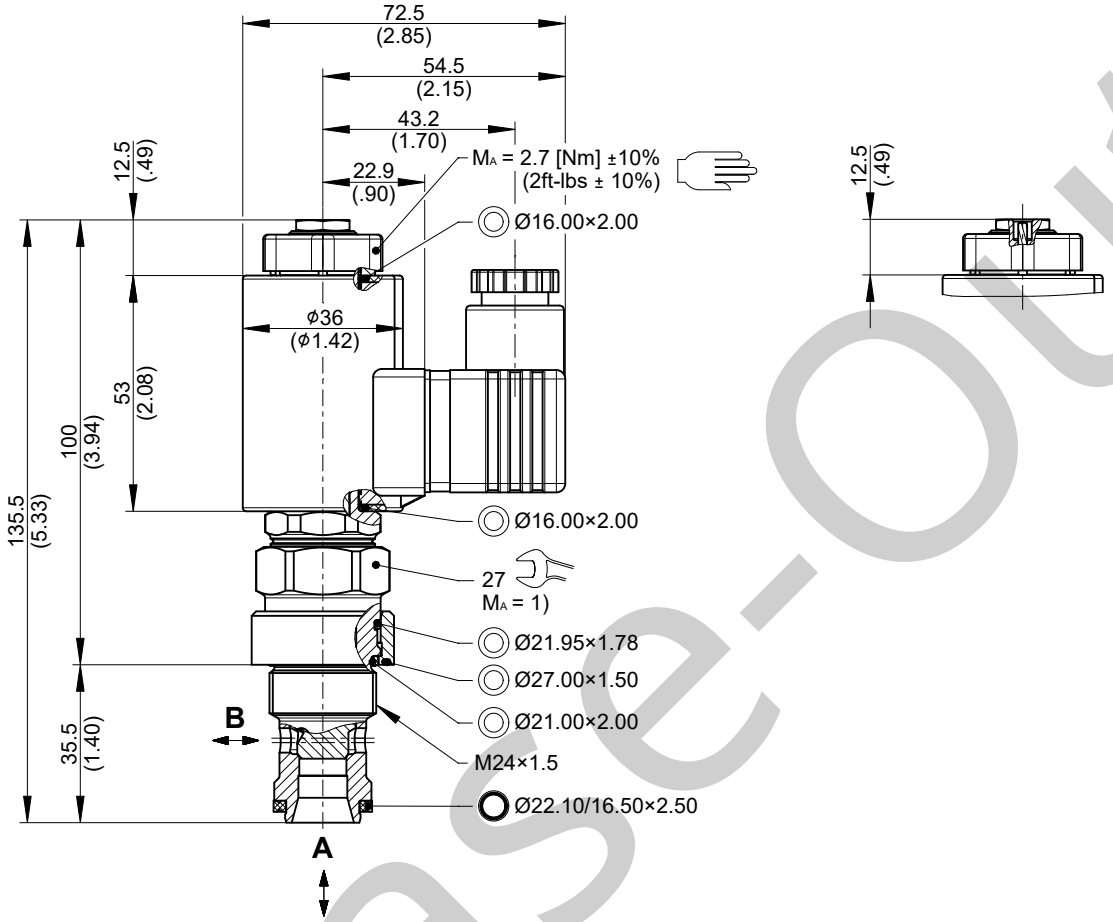

Installation information

IMPORTANT!
1) When fitting the screw-in cartridge valve, use the specified tightening torque. The value can be found in the chapter "Technical data".

ATTENTION!
Only qualified personnel with mechanical skills may carry out any maintenance work. Generally, the only work that should ever be undertaken is to check, and possibly replace, the seals. When changing seals, oil or grease the new seals thoroughly before fitting them.

Phase-Out

Ordering code

Ex. W S 22O N C B - 10 _ - 1 24 D - _

W	=	Wegventil / Directional valve
S	=	Sitzventilgehäuse, sitzdicht / Valve housing, seated design
22O	=	2/2-Wege-Funktion, stromlos geöffnet / 2/2-way function, normally open
N	=	Elektrisch betätigt, 27 W / 25 W / Electrically operated, 27 W / 25 W
C	=	Bauvorgabe DC / Cavity for DC
A ... Q	=	Standard-Ausführung gemäß gültigem Datenblatt / Standard version according to valid data sheet
Z ... R	=	Spezial-Ausführung (auf Anfrage) / Special version (upon request)
10	=	Nennweite 10 / Nominal size 10
(blank)	=	NBR (Nitril-Butadien-Kautschuk) / NBR (Nitrile butadiene rubber) **(Standard)**
V	=	FKM (Fluor-Kautschuk) / FKM (Fluoro-carbon rubber)
		(Spezial-Dichtungen auf Anfrage) / (Special seals on request)
1 ... 9	=	Technischer Stand (bei Bestellung weglassen) / Technical design (omit when ordering)
...	=	Spannungsart (24 V) / Voltage (24 V)
D	=	Strom DC / Current DC
A	=	Strom AC / Current AC
(blank)	=	DIN EN 175301-803 Anschluss / DIN EN 175301-803 connection 3-polig + E / 3-pole + E **(Standard)** (IP 65) mit Gegenstecker / with mating plug
T	=	DIN EN 175301-803 Anschluss / DIN EN 175301-803 connection 3-polig + E, mit Schutzdiode / 3-pole + E, with protection diode (IP 65) mit Gegenstecker / with mating plug
M100	=	DIN EN 175301-803 Anschluss / DIN EN 175301-803 connection 3-polig + E / 3-pole + E (IP 65)
J	=	Junior-Timer-Stecker-Anschluss / Junior-Timer-plug-connection 2-polig radial / 2-pole radial (IP 65)
JT	=	Junior-Timer-Stecker-Anschluss / Junior-Timer-plug-connection 2-polig radial, mit Schutzdiode / 2-pole radial, with protection diode (IP 65)
I	=	Junior-Timer-Stecker-Anschluss / Junior-Timer-plug-connection 2-polig axial / 2-pole axial (IP 65)
IT	=	Junior-Timer-Stecker-Anschluss / Junior-Timer-plug-connection 2-polig axial, mit Schutzdiode / 2-pole axial, with protection diode (IP 65)
D	=	Deutsch-Stecker-Anschluss DT04-2P / Deutsch-plug-connection DT04-2P 2-polig 45° / 2-pole 45° (IP 67/69K)
DT	=	Deutsch-Stecker-Anschluss DT04-2P / Deutsch-plug-connection DT04-2P 2-polig 45°, mit Schutzdiode / 2-pole 45°, with protection diode (IP 67/69K)
		Weitere Steckeranschlüsse / Varianten auf Anfrage. / Further plug-connections / variants upon request.
		W
		W

mating plug / Gegenstecker

WICHTIG!
IMPORTANT!
Nicht jede Kombination von Spannungsarten, Stromarten und Steckeranschlüssen ist lieferbar. / Not every combination of voltages, current types and plug connections is available.

Related data sheets

Reference	Description
400-P-040011	Form tools
400-P-010101	MTTFd Values for Hydraulic Valves
400-P-120110	Solenoid coil D36
400-P-060111	Cavity DC
400-P-740101	Threaded port body DC-12

Phase-Out

info.ch@bucherhydraulics.com www.bucherhydraulics.com

© 2025 by Bucher Hydraulics AG Frutigen, 3714 Frutigen, Switzerland

All rights reserved.
Data is provided for the purpose of product description only, and must not be construed as warranted characteristics in the legal sense. The information does not relieve users from the duty of conducting their own evaluations and tests. Because the products are subject to continual improvement, we reserve the right to amend the product specifications contained in this catalogue.

BUCHER hydraulics
WWW.SUMY.IR

Directional valve 2-way/2-position

Q_{max} = 140 l/min, p_{max} = 350 bar
pilot operated, poppet type, switching solenoid
Type series: WS22ONDB-10...

- Screw-in cartridge valve
- For cavity DD
- All external parts with zinc-nickel plating according to DIN EN ISO 19598
- Installation in threaded port body type DD-12
- With bidirectional seat-valve shut-off
- High flow rates
- Compact construction
- Low head loss
- De-energized open
- The slip-on coil can be rotated, and it can be replaced without opening the hydraulic envelope
- High pressure wet-armature solenoids
- Various plug-connector systems and voltages are available

Phase-Out

Description

The 2-way/2-position solenoid-operated directional valves, series WS22..., are size 10, two stage, high performance screw-in valves with an M24×1.5 mounting thread. The main and pilot stages are both designed on the poppet/seat principle, and they are therefore virtually leak-free in both directions of flow (bidirectional seat-valve shut-off). All external parts of the screw-in valves are zinc-nickel plated and are thus suitable for use in the harshest operating environments. The slip-on coils can be replaced without opening the hydraulic envelope and can be positioned at any angle through 360°. These screw-in valves are predominantly used in certain mobile and industrial applications where leak-tight shut-off functions are crucially important. Examples are where loads, tensions, or clamping forces must be held without leakage. For self-assembly, please refer to the section related data sheets.

Symbol

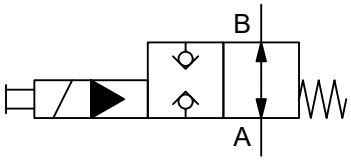

Technical data

General characteristics	Description, value, unit
Product status	Phase-Out
Alternative product	WSVN22O-10F... (400-P-131311)
Function group	Directional valve
Function	2-way/2-position
Design	Screw-in cartridge valve
Controls	switching solenoid
Characteristic	pilot operated, poppet type
MTTFd value	150 years
Construction size	NG 10
Thread size	M24×1,5
Mounting attitude	unrestricted
Weight	0.52 kg
Cavity acc. factory standard	For cavity DD
Tightening torque steel	65 Nm
Tightening torque aluminium	50 Nm
Tightening torque tolerance	± 10 %
Minimum ambient temperature	- 30 °C
Maximum ambient temperature	+ 80 °C
Surface protection	All external parts with zinc-nickel plating according to DIN EN ISO 19598
Sealing material	see ordering code
Seal kit order number	NBR: DS-281-N / FKM: DS-281-V

Hydraulic characteristics	Description, value, unit
Maximum operating pressure	350 bar
Maximum flow rate	140 l/min
Flow direction	see symbol
Hydraulic fluid	HL and HLP mineral oil according to DIN 51 524; other fluids on request!
Minimum fluid temperature	- 30 °C
Maximum fluid temperature	+ 80 °C
Viscosity range	10 ... 500 mm^2/s (cSt)
Recommended viscosity range	15 ... 250 mm^2/s (cSt)
Minimum fluid cleanliness (cleanlineless class according to ISO 4406:1999)	class 20/18/15

Electric characteristics	Description, value, unit
Actuator type	solenoid coil
Solenoid coils type	D36
Supply voltage DC	12/24 V DC
Supply voltage AC	115/230 (50 ... 60 Hz) V AC
Supply voltage tolerance	± 10 %
Nominal power consumption	V DC = 27 W / V AC = 25 W

Phase-Out

WWW.SUMY.IR

Electric characteristics	Description, value, unit
Relative duty cycle	100 %
Minimum ambient temperature	- 30 °C
Maximum ambient temperature	+ 50 °C
Electrical connection coil	several connection types available, see ordering code
Protection class solenoid coil to ISO 20 653 / EN 60 529	several classes of protection available, see ordering code (with appropriate mating connector and proper fitting and sealing)

Performance graphs

measured with oil viscosity 33.0 mm²/s (cSt), coil at steady-state temperature and 10 % undervoltage

p = f (Q) Performance limit

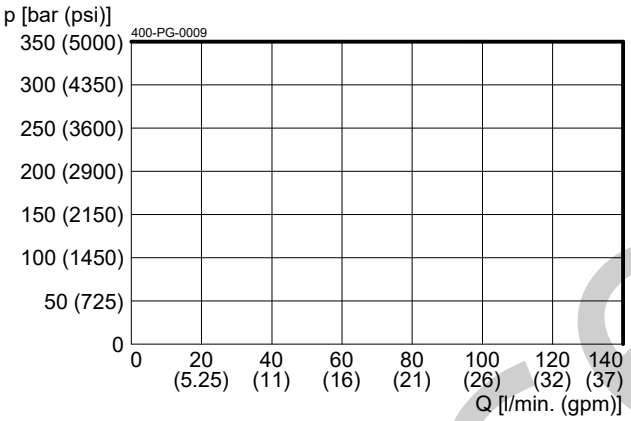

Δp = f (Q) Pressure drop-flow rate characteristic

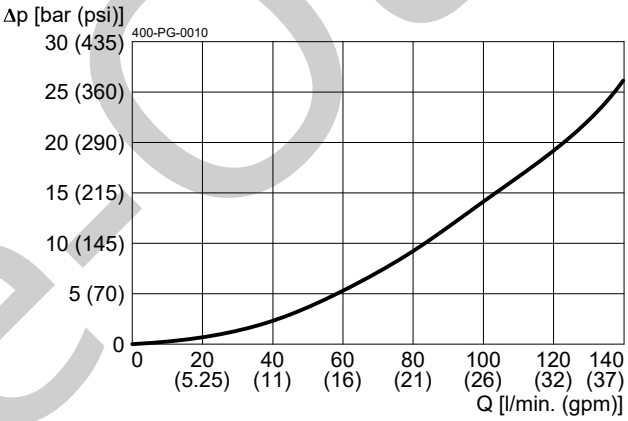

Phase-Out

Dimensions and sectional view

Beispiel für die Masseinheit:
Exampel for the dimensional units:

0.79	= 0.79 mm	millimeter
(.031)	= 0.031"	inch

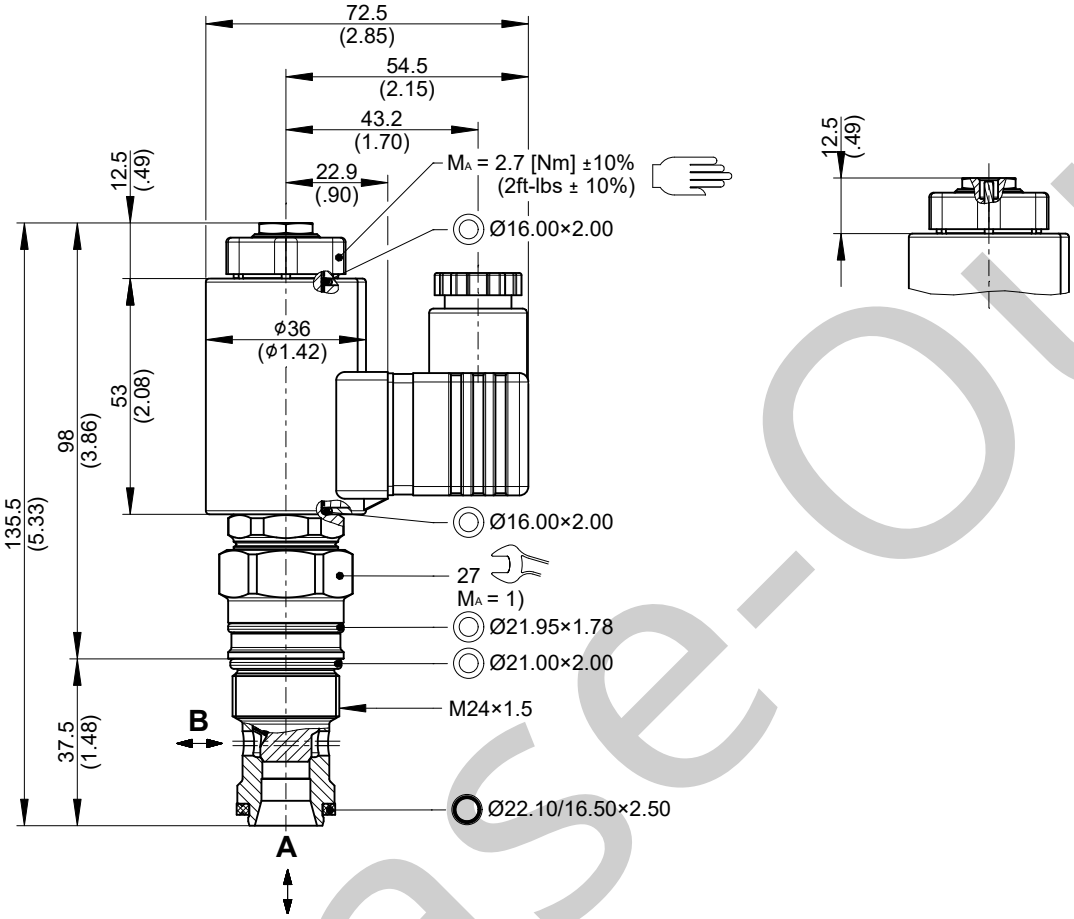

Installation information

IMPORTANT!
1) When fitting the screw-in cartridge valve, use the specified tightening torque. The value can be found in the chapter "Technical data".

ATTENTION!
Only qualified personnel with mechanical skills may carry out any maintenance work. Generally, the only work that should ever be undertaken is to check, and possibly replace, the seals. When changing seals, oil or grease the new seals thoroughly before fitting them.

Phase-Out

Ordering code

| | | |

BUCHER hydraulics
WWW.SUMY.IR

Directional valve 2-way/2-position

Q_{max} = 140 l/min, p_{max} = 350 bar
pilot operated, poppet type, switching solenoid
Type series: WS22ONHA-10...

- Screw-in cartridge valve
- For cavity DH
- All external parts with zinc-nickel plating according to DIN EN ISO 19598
- Installation in threaded port body type GCDHA
- With bidirectional seat-valve shut-off
- High flow rates
- Compact construction
- Low head loss
- Version with return spring for main spool (on request)
- De-energized open
- The slip-on coil can be rotated, and it can be replaced without opening the hydraulic envelope
- High pressure wet-armature solenoids
- Various plug-connector systems and voltages are available

Description

The 2-way/2-position solenoid-operated directional valves, series WS22..., are size 10, two stage, high performance screw-in valves with an M27×2 mounting thread. The main and pilot stages are both designed on the poppet/seat principle, and they are therefore virtually leak-free in both directions of flow (bidirectional seat-valve shut-off). All external parts of the screw-in valves are zinc-nickel plated and are thus suitable for use in the harshest operating environments. The slip-on coils can be replaced without opening the hydraulic envelope and can be positioned at any angle through 360°. These screw-in valves are predominantly used in certain mobile and industrial applications where leak-tight shut-off functions are crucially important. Examples are where loads, tensions, or clamping forces must be held without leakage. For self-assembly, please refer to the section related data sheets.

Symbol

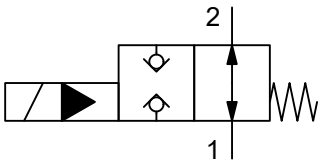

Technical data

General characteristics	Description, value, unit
Function group	Directional valve
Function	2-way/2-position
Design	Screw-in cartridge valve
Controls	switching solenoid
Characteristic	pilot operated, poppet type
MTTFd value	150 years
Construction size	NG 10
Thread size	M27×2
Mounting attitude	unrestricted
Weight	0.52 kg
Cavity acc. ISO	fits into ISO 7789: 27-01-0-07
Cavity acc. factory standard	For cavity DH
Tightening torque steel	80 Nm
Tightening torque aluminium	80 Nm
Tightening torque tolerance	± 10 %
Minimum ambient temperature	- 30 °C
Maximum ambient temperature	+ 80 °C
Surface protection	All external parts with zinc-nickel plating according to DIN EN ISO 19598
Sealing material	see ordering code
Seal kit order number	NBR: DS-367-N / FKM-DS-367-V

Hydraulic characteristics	Description, value, unit
Maximum operating pressure	350 bar
Maximum flow rate	140 l/min
Flow direction	see symbol
Hydraulic fluid	HL and HLP mineral oil according to DIN 51 524; other fluids on request!
Minimum fluid temperature	- 30 °C
Maximum fluid temperature	+ 80 °C
Viscosity range	10 ... 500 mm^2/s (cSt)
Recommended viscosity range	15 ... 250 mm^2/s (cSt)
Minimum fluid cleanliness (cleanlineless class according to ISO 4406:1999)	class 20/18/15

Electric characteristics	Description, value, unit
Actuator type	solenoid coil
Solenoid coils type	D36
Supply voltage DC	12/24 V DC
Supply voltage AC	115/230 (50 ... 60 Hz) V AC
Nominal power consumption	V DC = 27 W / V AC = 25 W
Relative duty cycle	100 %
Minimum ambient temperature	- 30 °C

WWW.SUMY.IR

Electric characteristics	Description, value, unit
Maximum ambient temperature	+ 50 °C
Electrical connection coil	several connection types available, see ordering code
Protection class solenoid coil to ISO 20 653 / EN 60 529	several classes of protection available, see ordering code (with appropriate mating connector and proper fitting and sealing)

Performance graphs

measured with oil viscosity 33.0 mm²/s (cSt), coil at steady-state temperature and 10 % undervoltage

p = f (Q) Performance limit

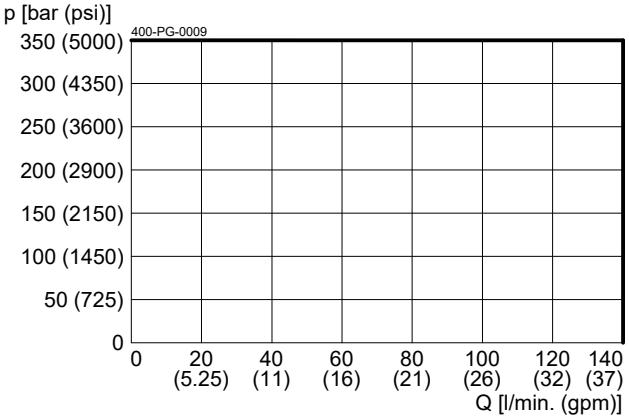

Δp = f (Q) Pressure drop-flow rate characteristic

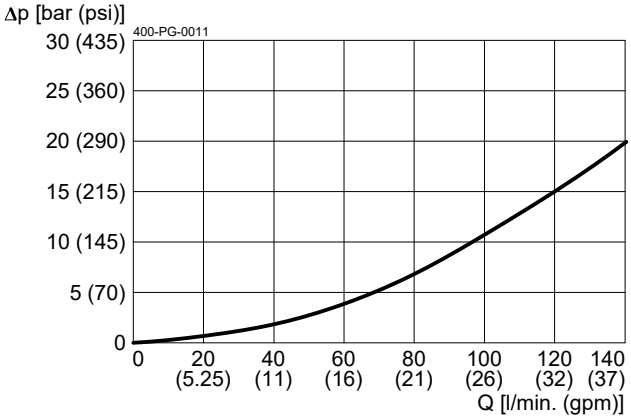

Dimensions and sectional view

Beispiel für die Masseinheit:
Exampel for the dimensional units:

0.79	= 0.79 mm	millimeter
(.031)	= 0.031"	inch

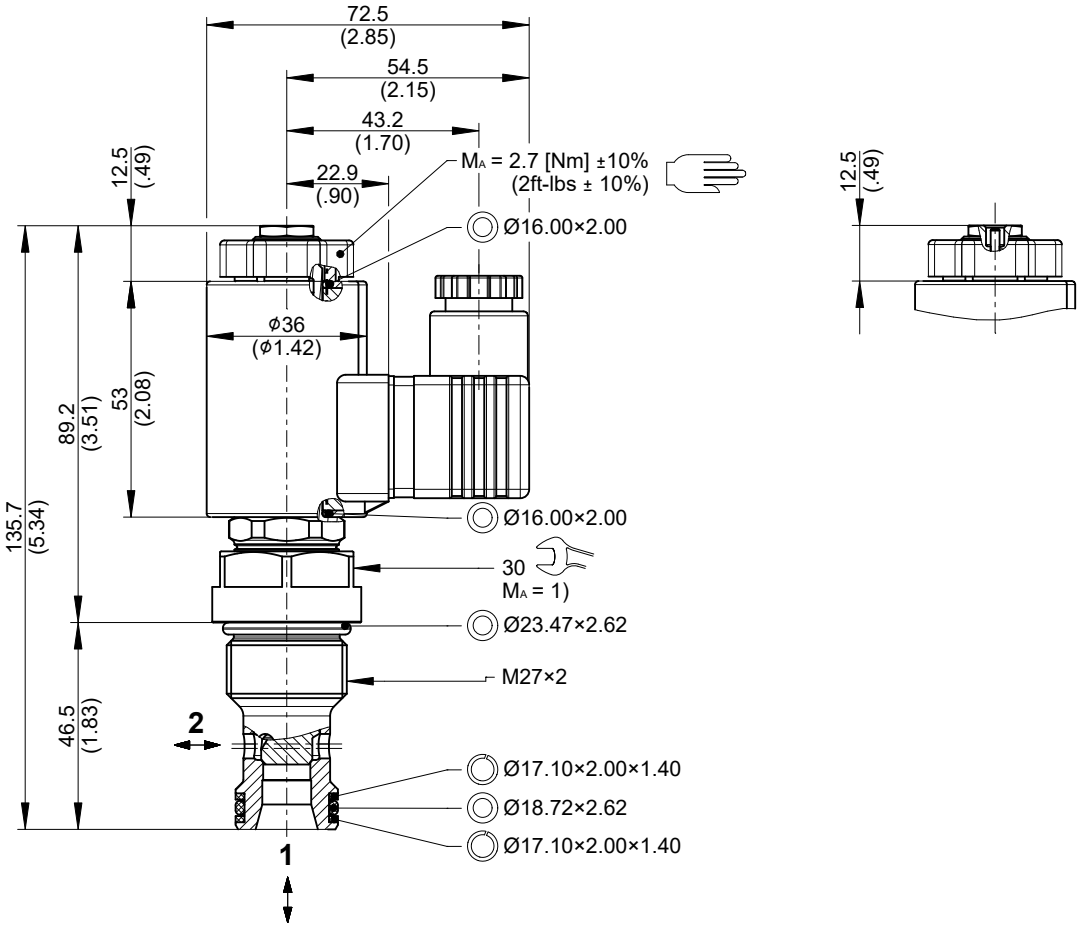

Installation information

IMPORTANT!
1) When fitting the screw-in cartridge valve, use the specified tightening torque. The value can be found in the chapter "Technical data".

ATTENTION!
Only qualified personnel with mechanical skills may carry out any maintenance work. Generally, the only work that should ever be undertaken is to check, and possibly replace, the seals. When changing seals, oil or grease the new seals thoroughly before fitting them.

BUCHER hydraulics
WWW.SUMY.IR

Ordering code

Ex. W S 22O N H A - 10 _ - 1 24 D - _

W	=	Wegventil / Directional valve
S	=	Sitzventil, Gehäuse aus Hydraulikstahl, dichtend / Seat valve housing made of hydraulic steel, seated design
22O	=	2/2-Wege-Funktion, stromlos geöffnet / 2/2-way function, normally open
N	=	Elektrisch betätigt, V DC 27 W / V AC 25 VA / Electrically operated, V DC 27 W / V AC 25 VA
H	=	Bauvorgabe DH / Cavity type DH
A ... Q	=	Standard-Ausführung gemäß gültigem Datenblatt / Standard version according to valid data sheet
Z ... R	=	Spezial-Ausführung (auf Anfrage) / Special version (upon request)
10	=	Nennweite 10 / Nominal size 10
(blank)	=	NBR (Nitril-Butadien-Kautschuk) / NBR (Nitrile butadiene rubber) **(Standard)**
V	=	FKM (Fluor-Kautschuk) / FKM (Fluoro-carbon rubber)
		(Spezial-Dichtungen auf Anfrage) / (Special seals on request)
1 ... 9	=	Technischer Stand (ein Buchstabe wird weggelassen) / Technical design (one letter is omitted)
...	=	Spannungsart (24 V) / Voltage type (24 V)
D	=	Strom DC / Current DC
A	=	Strom AC / Current AC
(blank)	=	DIN EN 175301-803 Anschluss / DIN EN 175301-803 connection 3-polig + PE / 3-pole + PE **(Standard)** (IP 65) mit Gegenstecker / with mating plug
T	=	DIN EN 175301-803 Anschluss / DIN EN 175301-803 connection 3-polig + PE, mit Schutzdiode / 3-pole + PE, with protection diode (IP 65) mit Gegenstecker / with mating plug
M100	=	DIN EN 175301-803 Anschluss / DIN EN 175301-803 connection 3-polig + PE / 3-pole + PE (IP 65)
J	=	Junior-Timer-Stecker-Anschluss / Junior-Timer-plug-connection 2-polig / 2-pole Radial (IP 65)
JT	=	Junior-Timer-Stecker-Anschluss / Junior-Timer-plug-connection 2-polig / 2-pole Radial, mit Schutzdiode / with protection diode (IP 65)
I	=	Junior-Timer-Stecker-Anschluss / Junior-Timer-plug-connection 2-polig / 2-pole Axial (IP 65)
IT	=	Junior-Timer-Stecker-Anschluss / Junior-Timer-plug-connection 2-polig / 2-pole Axial, mit Schutzdiode / with protection diode (IP 65)
D	=	Deutsch-Stecker-Anschluss DT04-2P / Deutsch-plug-connection DT04-2P 2-polig / 2-pole 45° (IP 67/69K)
DT	=	Deutsch-Stecker-Anschluss DT04-2P / Deutsch-plug-connection DT04-2P 2-polig / 2-pole 45°, mit Schutzdiode / with protection diode (IP 67/69K)
		Weitere Steckeranschlussvarianten auf Anfrage. / Other plug-connection variants upon request.
		W
		W

mating plug / Gegenstecker

WICHTIG!
IMPORTANT!
Nicht jede Kombination von Spannungsart, Steckeranschlussvarianten erhältlich.
Not every combination of voltage, type and plug-connection variants available.

Related data sheets

Reference	Description
400-P-040011	Form tools
400-P-010101	MTTFd Values for Hydraulic Valves
400-P-120110	Solenoid coil D36
400-P-060171	Cavity DH
400-P-740161	Threaded port body GCDHA

info.ch@bucherhydraulics.com www.bucherhydraulics.com

© 2025 by Bucher Hydraulics AG Frutigen, 3714 Frutigen, Switzerland

All rights reserved.
Data is provided for the purpose of product description only, and must not be construed as warranted characteristics in the legal sense. The information does not relieve users from the duty of conducting their own evaluations and tests. Because the products are subject to continual improvement, we reserve the right to amend the product specifications contained in this catalogue.

WWW.SUMY.IR

Directional valve 2-way/2-position

Q_{max} = 140 l/min, p_{max} = 350 bar
bidirectional, pilot operated, poppet type, switching solenoid
Type series: WSVN22O-10F...

- Screw-in cartridge valve
- For cavity HF/C1220A
- All external parts with zinc-nickel plating according to DIN EN ISO 19598
- Reliable switching, even after long dwell times
- No external pilot drain required
- Optional with manual override
- De-energized open
- The slip-on coil can be rotated, and it can be replaced without opening the hydraulic envelope
- High pressure wet-armature solenoids
- Various plug-connector systems and voltages are available

Description

The 2-way/2-position solenoid-operated directional seat valves, series WSVN22O..., are size 10 / SAE 12, two stage, pressure balanced screw-in valves with a 1 1/16-12 UN mounting thread. The main and pilot stages are both designed on the poppet/seat principle, and they are therefore virtually leak-free in both directions of flow (bidirectional seat-valve shut-off). All external parts of the screw-in valves are zinc-nickel plated and are thus suitable for use in the harshest operating environments. The slip-on coils can be replaced without opening the hydraulic envelope and can be positioned at any angle through 360°. These valves are used in mobile and industrial applications where leak-tight shut-off functions are crucially important. Examples are where loads, tensions, or clamping forces must be held without leakage.For self-assembly, please refer to the section related data sheets.

Symbol

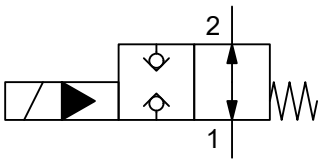

Technical data

General characteristics	Description, value, unit
Function group	Directional valve
Function	2-way/2-position
Design	Screw-in cartridge valve
Controls	switching solenoid
Characteristic	bidirectional, pilot operated, poppet type
MTTFd value	150 years
Construction size	NG 10 / SAE 12
Thread size	1 1/16-12 UN-2A
Mounting attitude	unrestricted
Weight	0.6 kg
Cavity acc. factory standard	For cavity HF/C1220A
Tightening torque steel	150 Nm
Tightening torque aluminium	150 Nm
Tightening torque tolerance	± 10 %
Minimum ambient temperature	- 30 °C
Maximum ambient temperature	+ 50 °C
Surface protection	All external parts with zinc-nickel plating according to DIN EN ISO 19598
Sealing material	see ordering code
Seal kit order number	NBR: DS-518-N / FKM: DS-518-V

Hydraulic characteristics	Description, value, unit
Maximum operating pressure	350 bar
Maximum flow rate	140 l/min
Flow direction	see symbol
Hydraulic fluid	HL and HLP mineral oil according to DIN 51 524; other fluids on request!
Minimum fluid temperature	- 30 °C
Maximum fluid temperature	+ 80 °C
Viscosity range	10 ... 500 mm^2/s (cSt)
Recommended viscosity range	15 ... 250 mm^2/s (cSt)
Minimum fluid cleanliness (cleanlineless class according to ISO 4406:1999)	class 20/18/15

Electric characteristics	Description, value, unit
Actuator type	solenoid coil
Solenoid coils type	D36
Supply voltage DC	12/24 V DC
Supply voltage AC	115/230 (50 ... 60 Hz) V AC
Supply voltage tolerance	± 10 %
Nominal power consumption	V DC = 27 W / V AC = 25 W

WWW.SUMY.IR

Electric characteristics	Description, value, unit
Switching time	Switching time measured at: UN; Δp = 280 bar; Q = 112 l/min; TAmbient = 20 °C; ϑ = 46 mm2/s / 1 to 2: 77 ms (energizing) 38 ms (de-energizing) 2 to 1: 96 ms (energizing) 33 ms (de-energizing)
Relative duty cycle	100 %
Electrical connection coil	several connection types available, see ordering code
Protection class solenoid coil to ISO 20 653 / EN 60 529	several classes of protection available, see ordering code (with appropriate mating connector and proper fitting and sealing)

NOTE!
The switching time can be strongly dependent on flow rate, pressure, oil viscosity and the dwell time under pressure. In practice, the switching time may therefore deviate from the specified value range.

Performance graphs

measured with oil viscosity 33.0 mm²/s (cSt), coil at steady-state temperature and 10 % undervoltage

p = f (Q) Performance limit

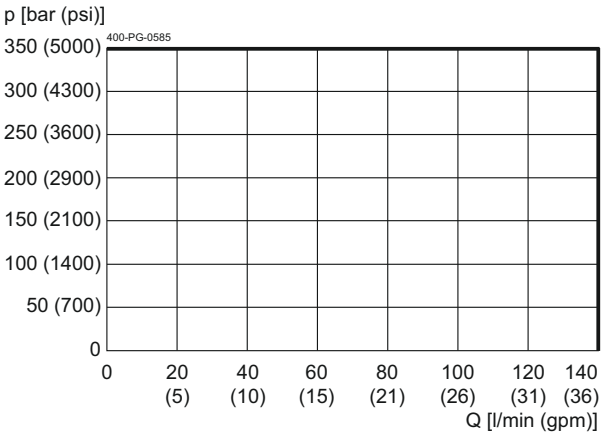

Δp = f (Q) Pressure drop-flow rate characteristic

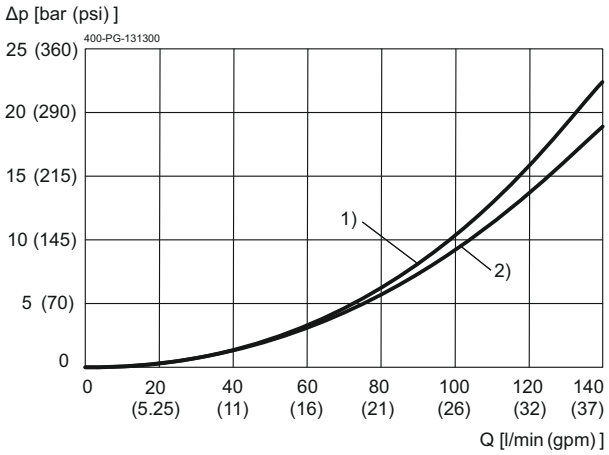

1) = 2→1
2) = 1→2

Dimensions and sectional view

Beispiel für die Masseinheit:
Exampel for the dimensional units:

0.79	= 0.79 mm	millimeter
(.031)	= 0.031"	inch

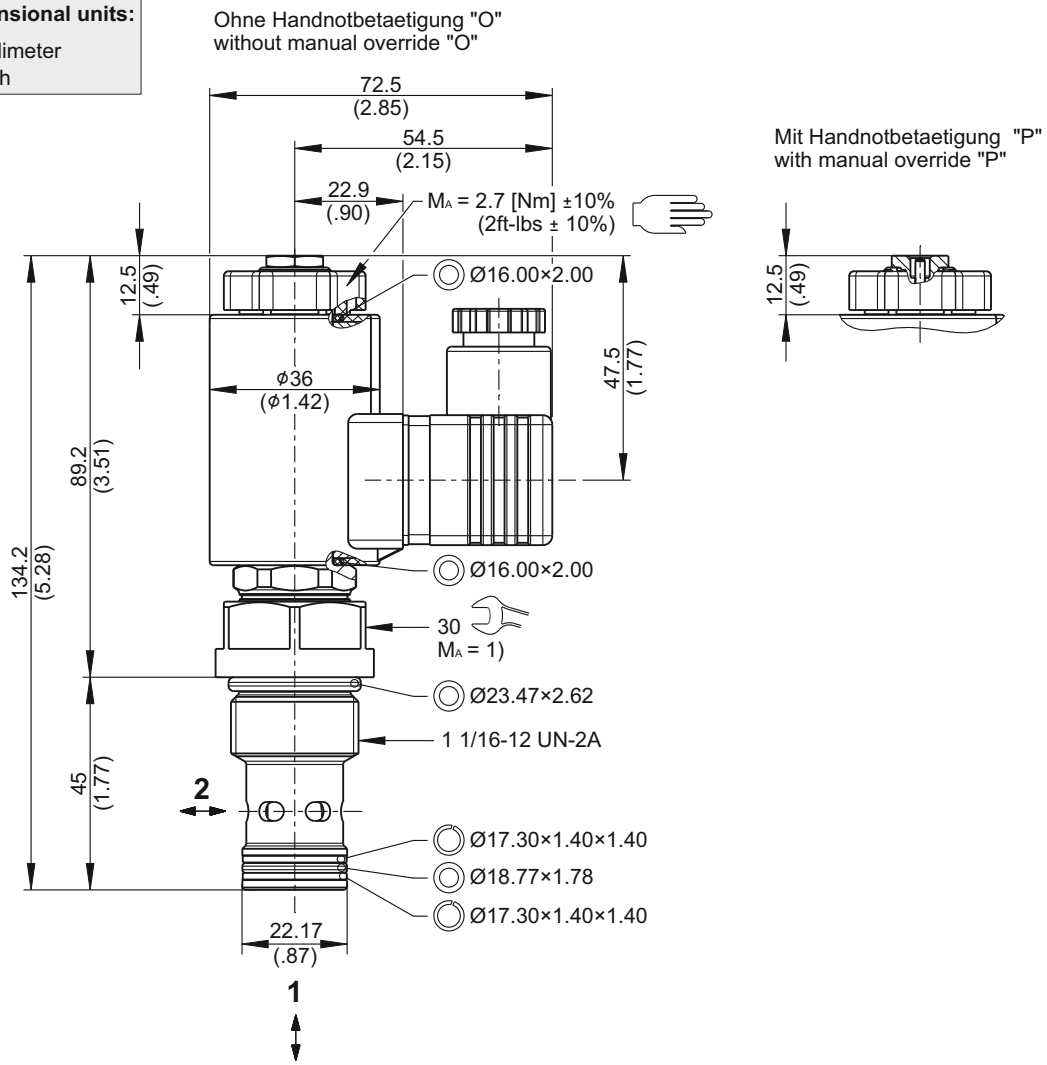

Installation information

IMPORTANT!
1) When fitting the screw-in cartridge valve, use the specified tightening torque. The value can be found in the chapter "Technical data".

ATTENTION!
Only qualified personnel with mechanical skills may carry out any maintenance work. Generally, the only work that should ever be undertaken is to check, and possibly replace, the seals. When changing seals, oil or grease the new seals thoroughly before fitting them.

NOTE!
The seals are not available individually. The seal kit order number can be found in the chapter "Technical data".

Ordering code

Ex. W S V N 22O - 10 F - O - N A 1 24 D _

W	=	directional valve
S	=	bidirectional seat-valve shut-off, seated design
V	=	pilot operated
N	=	electrically operated, V DC = 27 W / V AC = 25 W
22O	=	2-way/2-position, normally open
10	=	nominal size 10 / SAE12
F	=	cavity type HF/C1220A
O	=	with manual override **(standard)**
P	=	without manual override
N	=	NBR (nitril-butadien-rubber / BUNA) seals **(standard)**
V	=	FKM (fluorocarbon rubber / VITON) seals (special seals on request)
A ... Q	=	standard model according to valid data sheet
Z ... R	=	special model (on request)
1 ... 9	=	technical design no. (omit by ordering)
…	=	voltage e.g. 24 (24 V)
D	=	current DC
A	=	current AC

(blank)	=	DIN EN 175301-803 connection	3-pole 2 P+E **(standard)**	(IP 65)	with mating plug
T	=	DIN EN 175301-803 connection	3-pole 2 P+E, with protection diode	(IP 65)	with mating plug
M100	=	DIN EN 175301-803 connection	3-pole 2 P+E	(IP 65)	mating plug not supplied
J	=	Junior Timer plug connection	2-pole radial	(IP 65)	mating plug not supplied
JT	=	Junior Timer plug connection	2-pole radial, with protection diode	(IP 65)	mating plug not supplied
I	=	Junior Timer plug connection	2-polig axial	(IP 65)	mating plug not supplied
IT	=	Junior Timer plug connection	2-polig axial, with protection diode	(IP 65)	mating plug not supplied
D	=	Deutsch plug connection DT04-2P	2-pole 45°	(IP 67/69K)	mating plug not supplied
DT	=	Deutsch plug connection DT04-2P	2-pole 45°, with protection diode	(IP 67/69K)	mating plug not supplied
		other plug-variants, please consult BUCHER.			

IMPORTANT!
Not every combination of voltage values, current type and plug connections vailable.

Related data sheets

Reference	Description
400-P-065111	Cavity HF/C1220A
400-P-120110	Solenoid coil D36
400-P-010101	MTTFd Values for Hydraulic Valves
400-P-040011	Form tools
400-P-740551	Threaded port body GHF-34...

BUCHER
hydraulics
WWW.SUMY.IR

info.ch@bucherhydraulics.com **www.bucherhydraulics.com**

© 2025 by Bucher Hydraulics AG Frutigen, 3714 Frutigen, Switzerland

All rights reserved.
Data is provided for the purpose of product description only, and must not be construed as warranted characteristics in the legal sense. The information does not relieve users from the duty of conducting their own evaluations and tests. Because the products are subject to continual improvement, we reserve the right to amend the product specifications contained in this catalogue.

2/2 Solenoid Cartridge Valve, Size 6

Q_{max} = 20 l/min (5.3 gpm), p_{max} = 315 bar (4500 psi)
Bidirectional leak-proof shutoff, direct acting, with EX-safety solenoid coil Series EEX-W1C.B…

Valve:
- Bidirectional leak-proof shutoff
- De-energised closed
- Guided valve spool and poppet
- Available in two mounting versions
- With or without manual override

Solenoid coil:
- To IEC/EN 60079-0, IEC/EN 60079-7, IEC/EN 60 079-18
- For equipment in Category 2 (Zones 1 and 2)
- Certificate of conformity: BASEEFA 02 ATEX 0199 X

Ex II 2 G Ex e mb IIC T4 Gb

1 Description

The EEX-W1C.B... series of 2/2 solenoid operated directional seat valves are size 6, direct acting, pressure balanced, push-in cartridges. An EX-protected solenoid for explosive gas atmospheres (II 2 G) is used to provide electrical operation of the cartridge. In the normal condition (de-energised closed), flow is shut off without leakage. The core element operates on the tried and tested principle of the guided poppet, and the guide spool has a seal. Two different mounting versions are available, which allows the designer to choose the insertion depth (flange 10.1 mm or 18 mm). These cartridge seat valves are also available with or without manual override. They are suitable where leak-tight shut-off functions are crucially important. Examples are where loads, tensions, or clamping forces must be held without leakage. All external parts of the valve are corrosion-protected, and the valves are thus also suitable for use outdoors.

Ex: Solenoid conforms to the European standards IEC/EN 60079-0, IEC/EN 60079-7, IEC/EN 60079-18
e: Increased safety
mb: Encapsulation
Group IIC: For use in explosive gas atmospheres
T4: Max. surface temperature 135 °C
Gb: For use in Zone 1 (Zone 2) with foreseeable faults
Certificate of conformitys:
BASEEFA 02 ATEX 0199 X
IECEx BAS13.0093 X (on request)

2 Symbol

3 Technical data

General characteristics	Description, value, unit
Designation	2/2 solenoid cartridge valve
Design	bidirectional leak-proof shutoff, direct acting poppet and valve-spool design (pressure balanced) with EX-protected solenoid
Mounting method	push-in cartridge, 4 mounting bolts M5 x 10

Phase-Out

WWW.SUMY.IR

General characteristics	Description, value, unit	
Tightening torque	5.2 Nm ± 5 %	(4 ft.lbs ± 5 %)
Size	size 6, cavity type AA or cavity type AB	
Weight	1.4 kg	
Mounting attitude	unrestricted	
Ambient temperature range	see hydraulic and electrical characteristics	

Hydraulic characteristics	Description, value, unit	
Maximum operating pressure	315 bar	(4500 psi)
Maximum flow rate	20 l/min	(5.3 gpm)
Flow direction	1 → 2 / 2 → 1, see symbols	
Hydraulic fluid	HL and HLP mineral oil to DIN 51 524; for other fluids, please contact BUCHER	
Ambient temperature range [1)]	-25 °C … +80 °C	(-13 °F … +176 °F)
Hydraulic fluid temperature range [1)]	-25 °C … +80 °C [2)]	(-13 °F … +176 °F) [2)]
Viscosity range	10…500 mm^2/s (cSt), recommended 15...250 mm^2/s (cSt)	
Minimum fluid cleanliness Cleanliness class to ISO 4406 : 1999	class 20/18/15	

Electrical characteristics	Description, value, unit	
Supply voltage	24 V DC 230 V AC In AC solenoids, rectifier is integrated.	
Supply voltage tolerance	± 10 %	
Ambient temperature range [1)]	-40 °C … +40 °C (Operation as T4)	(-40 °F … +104 °F)
Temperatue class	T1 … T4	
EX-protection marking	II 2 G, Ex e mb IIC T4 Gb	
Nominal power consumption	31,9 W at 20 °C	(31.9 W at 68 °F)
Relative duty cycle	100 %	
Protection class to ISO 20 653 / EN 60 529	IP 54 (with properly fitted cable gland and properly made cable connection)	
Electrical connection	Shipped **without** cable gland (M20 x 1.5) and **without** cable Cable-entry temperature may exceed 70 °C	

IMPORTANT!:

[1)] The less favourable values from the hydraulic and electrical characteristics determine the temperature range of the whole valve.

IMPORTANT!:

[2)] The maximum fluid temperature must not exceed the permissible ambient temperature for the whole valve.

Phase-Out

4 Performance graphs

measured with oil viscosity 33 mm²/s (cSt), coil at steady-state temperature and 10 % undervoltage

p = f (Q) Performance limits

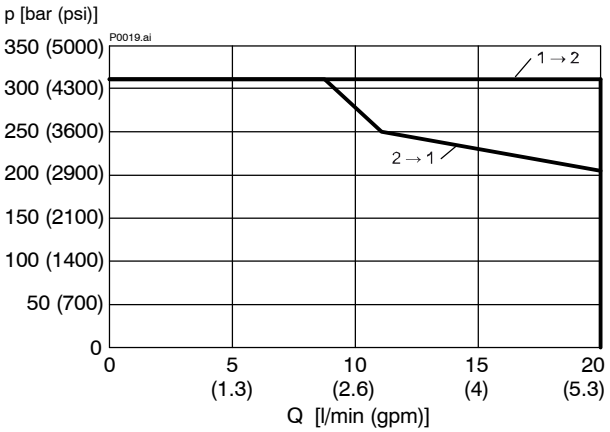

Δp = f (Q) Pressure drop - Flow rate characteristic (1 ↔ 2)

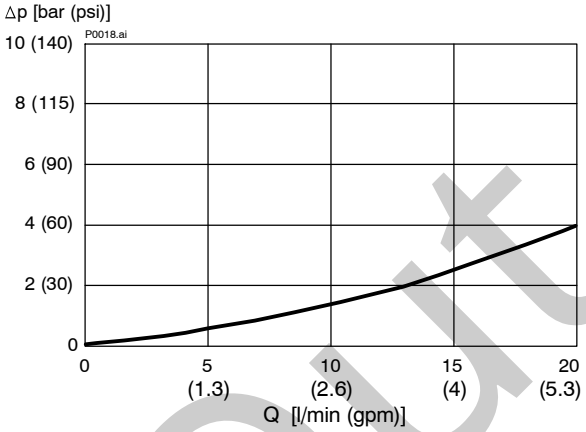

5 Installation information

COMMISSIONING

- For short-circuit protection, each solenoid must be preceded by a fuse conforming to B588 or IEC269 with a maximum rating of 2 A (AC) or 6 A (DC).
- The solenoid coils must only be operated when they are fitted on the associated valve. For more information on installation and commissioning, please refer to the operating instructions supplied with the solenoid coil.

ATTENTION!

Ratings given in the operating instructions
Pay attention to the relevant operating instructions! If in doubt, the ratings in the operating instructions apply.

ATTENTION!
Only qualified personnel with mechanical skills may carry out any maintenance work. Generally, the only work that should ever be undertaken is to check, and possibly replace, the seals. When changing seals, oil or grease the new seals thoroughly before fitting them.

ATTENTION!

Authorised persons
The tasks described here may only be carried out by authorised personnel. Authorised personnel are those who have electro-technical training (EN 60204-1).

IMPORTANT!
When fitting the cartridges, use the specified tightening torque for the mounting bolts. The marking "Valve End" on the adapter sleeve must be mounted towards the valve flange! No adjustments are necessary, since the cartridges are set in the factory.

IMPORTANT!
Minimum dimensions of the valve body
62.5 x 46 x 45.5 mm
Minimum dimensions of the mating body
101 x 46 x 43 mm
See also the user manual.

Phase-Out

WWW.SUMY.IR

6 Dimensions & sectional view

6.1 Mounting depth „shallow“

6.2 Mounting depth „deep“
(without manual override)

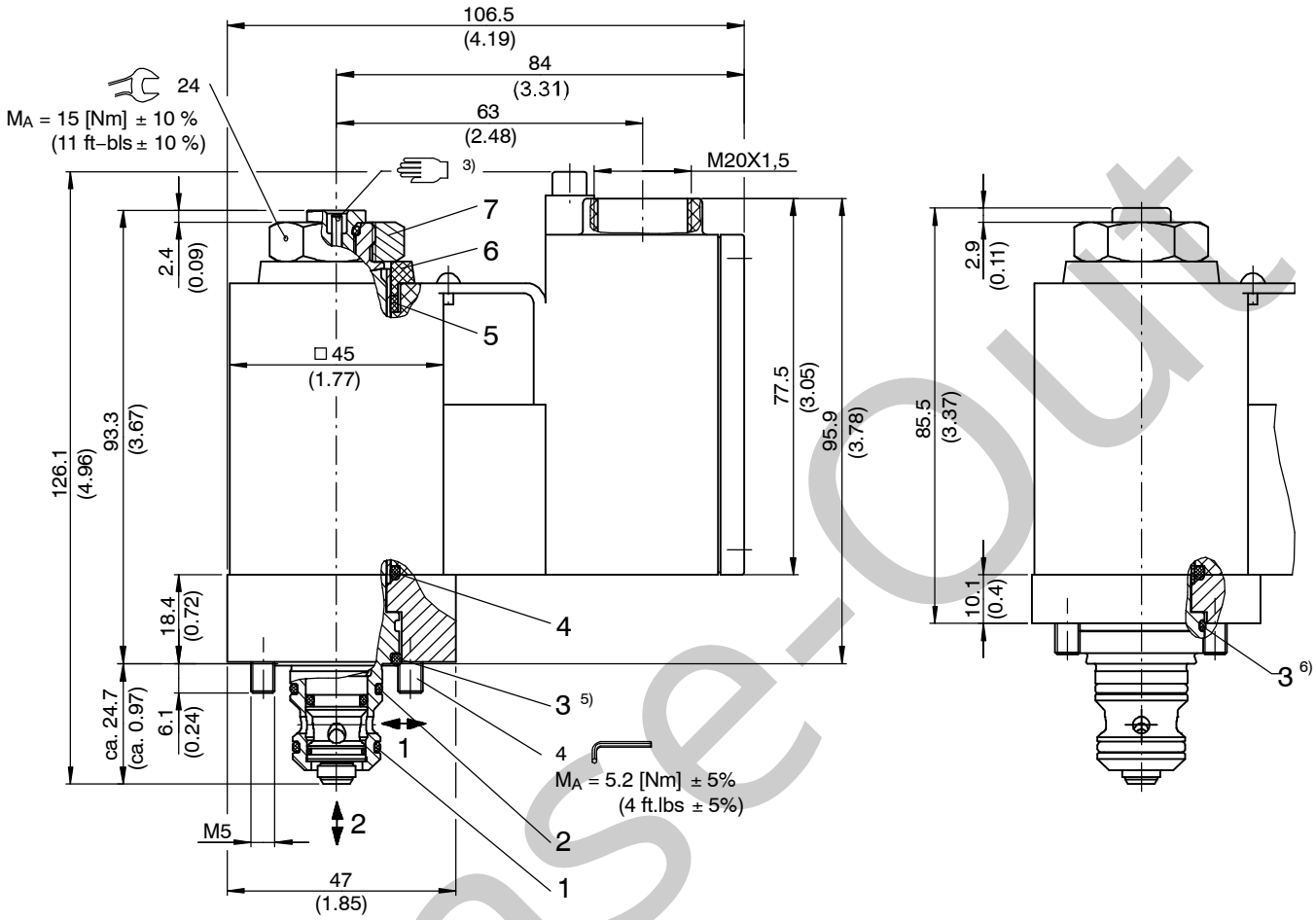

Seal kit no. DS-263-N 4)

Item	Qty. 5)	Qty. 6)	Description
1	1	1	O-ring no. 015 ∅ 14,00 x 1,78 N90
2	1	1	O-ring no. 016 ∅ 15,60 x 1,78 N90
3	1	- - -	O-ring no. 116 ∅ 18,72 x 2,62 N70
	- - -	1	O-ring no. 021 ∅ 23,52 x 1,78 N90
4	1	1	O-ring no. 116 ∅ 18,72 x 2,62 V70
5	1	1	Seal solenoid EX EMB D25,3
6	1	1	Spacer ring solenoid EX EMB
7	1	1	6A/F hex DIN439B M16X1,5 KL04 VZ

IMPORTANT!:

3) Can be chosen **with** or **without** manual overriede. (see ordering code).

4) Seal kit with Viton seals, no. DS-263-V

5) W1CB… / W1CD…
(mounting depth “shallow”)

6) W1CC… / W1CE…
(mounting depth “deep”)

Phase-Out

7 Ordering code

Ex. EEX - W1 C B B _ - 24 D

EEX	=	EX-protected solenoid coil instead of standard solenoid coil (for details, see electrical characteristics)
W1	=	directional seat valve, de-energiesed 1 → 2 closed
C	=	2/2 model, solenoid operated

Nitrile-seals	Viton-seals	Mounting depth (Cavity types AA and AB)		
B	G	shallow	=	with manual override
C	H	deep	=	with manual override
D	I	shallow	=	without manual override
E	K	deep	=	without manual override

B … Q	=	standard model - see relevant data sheets
Z … R	=	special features - please consult BUCHER
1 … 9	=	design number, seat valve (omit when ordering new units)
...	=	voltage e.g. 24 (24 V)
D	=	current DC
A	=	current AC

8 Related data sheets

Reference	(Old no.)	Description
400-P-040011	(i-32)	The form-tool hire programme
400-P-040101	(i-33.1)	Cavity type AA and AB
D14-2117D		Operating instructions for solenoid coil DC LISK
K14-2068D		Operating instructions for solenoid coil AC LISK
D14-2130D3		Operating instructions for solenoid coil DC LISK IEC (on request)
D14-2078D3		Operating instructions for solenoid coil AC LISK IEC (on request)

Phase-Out

info.ch@bucherhydraulics.com www.bucherhydraulics.com

© 2018 by Bucher Hydraulics AG Frutigen, CH-3714 Frutigen
All rights reserved.
Data is provided for the purpose of product description only, and must not be construed as warranted characteristics in the legal sense. The information does not relieve users from the duty of conducting their own evaluations and tests. Because the products are subject to continual improvement, we reserve the right to amend the product specifications contained in this catalogue.

Classification: 430.300.-.305.310.300

BUCHER hydraulics
WWW.SUMY.IR

Directional valve 2-way/2-position

Q_{max} = 40 l/min, p_{max} = 315 bar
direct acting, poppet type, mechanical operation
Type series: W1T... / W1W... (installation shallow)

- Slip-in cartridge valve
- For cavity AA
- All external parts with zinc-nickel plating according to DIN EN ISO 19598
- Guided valve spool and poppet
- With bidirectional seat-valve shut-off
- Closed in the non-operated condition

Phase-Out

Description

The 2-way/2-position solenoid-operated directional seat valves, series W1T... / W1W... (installation shallow), are size 6, direct acting, and pressure balanced screw-in valves. They are designed on the tried and tested principle of the guided poppet, the guide spool has a seal, and they are virtually leak-free in both directions of flow (bidirectional seat-valve shut-off). This type is the "shallow" installation version, which fits into the cavity type according to the AA factory standard. For the "deep" installation version, see separate data sheet. The hand lever can be turned through 360° and is available as a "detentable" (W1T...) or "non-detentable" (W1W...) model. All external parts of the valves are zinc-nickel plated and are thus suitable for use in the harshest operating environments. The slip-on coils can be replaced without opening the hydraulic envelope and can be positioned at any angle through 360°. These valves are predominantly used in certain mobile and industrial applications where leak-tight shut-off functions are crucially important. Examples are where loads, tensions, or clamping forces must be held without leakage. For self-assembly, please refer to the section related data sheets.

BUCHER hydraulics
WWW.SUMY.IR

Symbol

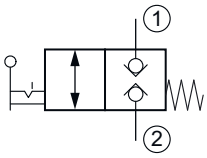

W1T...

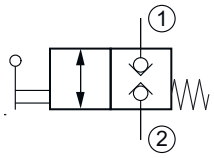

W1W...

Technical data

General characteristics	Description, value, unit
Product status	Phase-Out
Function group	Directional valve
Function	2-way/2-position
Design	Slip-in cartridge valve
Controls	mechanical operation
Characteristic	direct acting, poppet type
Construction size	NG 6
Mounting attitude	unrestricted
Weight	0.45 kg
Cavity acc. factory standard	For cavity AA
Tightening torque steel	5.2 Nm
Tightening torque aluminium	5.2 Nm
Tightening torque tolerance	± 5 %
Minimum ambient temperature	- 25 °C
Maximum ambient temperature	+ 80 °C
Surface protection	All external parts with zinc-nickel plating according to DIN EN ISO 19598
Sealing material	see ordering code
Seal kit order number	NBR: DS-387-N / FKM: DS-387-V

Hydraulic characteristics	Description, value, unit
Maximum operating pressure	315 bar
Maximum flow rate	40 l/min
Flow direction	see symbol
Hydraulic fluid	HL and HLP mineral oil according to DIN 51 524; other fluids on request!
Minimum fluid temperature	- 25 °C
Maximum fluid temperature	+ 80 °C
Viscosity range	10 ... 500 mm^2/s (cSt)
Recommended viscosity range	15 ... 250 mm^2/s (cSt)
Minimum fluid cleanliness (cleanlineless class according to ISO 4406:1999)	class 20/18/15

Phase-Out

BUCHER hydraulics
WWW.SUMY.IR

Mechanical characteristics	Description, value, unit
Execution	with hand lever, can be turned through 360°
Actuation angle	15 °

Performance graphs

measured with oil viscosity 33.0 mm²/s (cSt)

p = f (Q) Performance limit

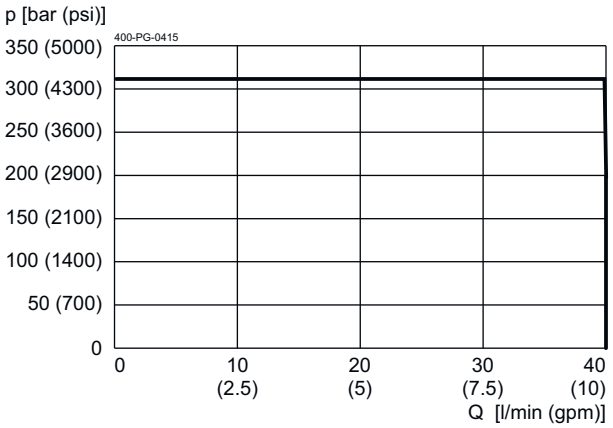

Δp = f (Q) Pressure drop-flow rate characteristic

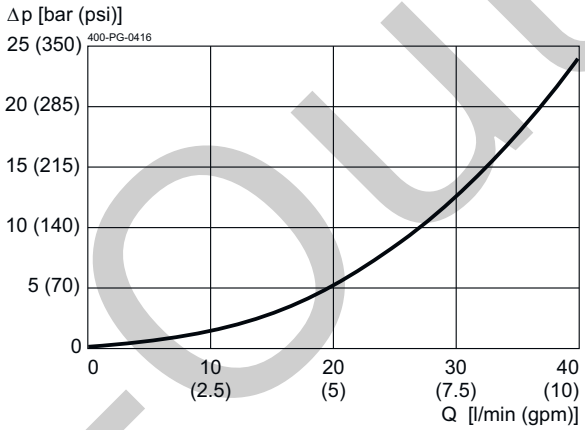

Dimensions and sectional view

Beispiel für die Masseinheit:
Example for the dimensional units:

0.79 = 0.79 mm millimeter
(.031) = 0.031" inch

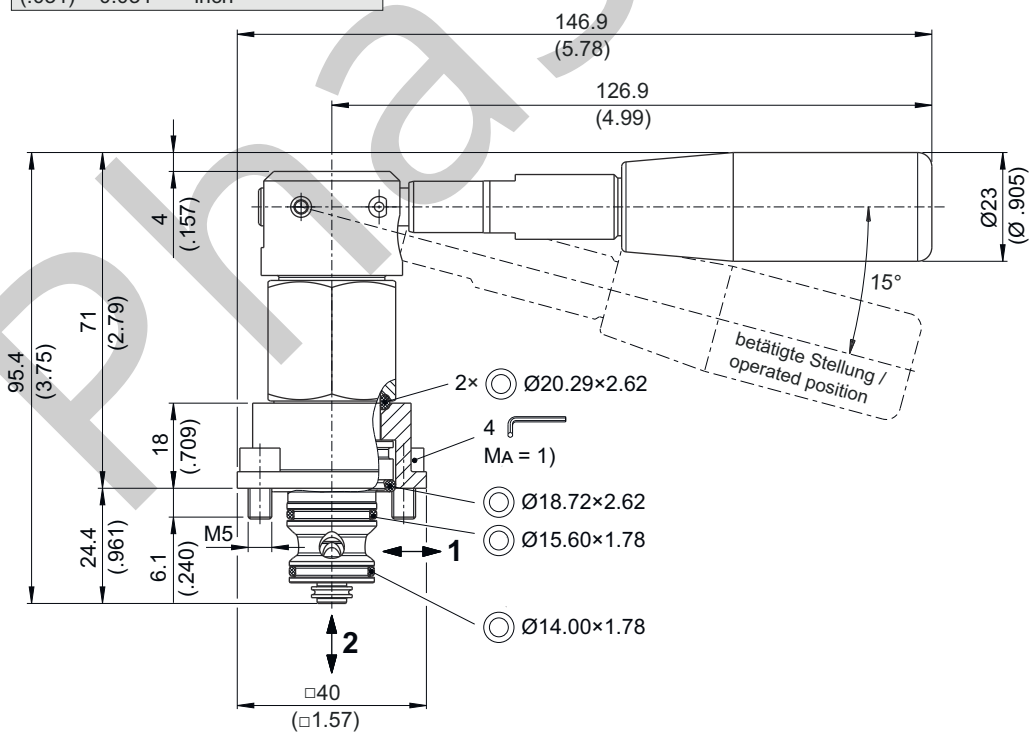

Phase-Out

Installation information

ATTENTION!
Only qualified personnel with mechanical skills may carry out any maintenance work. Generally, the only work that should ever be undertaken is to check, and possibly replace, the seals. When changing seals, oil or grease the new seals thoroughly before fitting them.

NOTE!
1) When fitting the slip-in valves, use the specified tightening torque for the mounting screws. The value can be found in the chapter "Technical data".

NOTE!
These valves can also be fitted in the cavity AC according to factory standard, and in such cases port 3 then has the same function as port 2.

IMPORTANT!
A “non-operated open” function can be created by using the 3/2 cartridge seat valve and the GADA line-mounting body. In this case, ports 2 and 3 are used. Port 1 is plugged.

Ordering code

Ex. W1 T Q B _

W1	= directional valve, poppet-type, direct acting
T	= 2-way/2-position, with hand lever, detentable
W	= 2-way/2-position, with hand lever, non-detentable
Q	= NBR (BUNA) seals **(standard)**, not available with line-mounting body
S	= FKM (VITON) seals, not available with line-mounting body
A…Q	= standard model according to valid data sheet **(standard)**
Z…R	= special model after consultation
1…9	= technical design no. directional valve (omit when ordering)

Related data sheets

Reference	Description
400-P-040011	Form tools
400-P-040101	Cavity AA

Phase-Out

info.ch@bucherhydraulics.com **www.bucherhydraulics.com**

© 2025 by Bucher Hydraulics AG Frutigen, 3714 Frutigen, Switzerland

All rights reserved.
Data is provided for the purpose of product description only, and must not be construed as warranted characteristics in the legal sense. The information does not relieve users from the duty of conducting their own evaluations and tests. Because the products are subject to continual improvement, we reserve the right to amend the product specifications contained in this catalogue.

BUCHER hydraulics
WWW.SUMY.IR

Directional valve 2-way/2-position

Q_{max} = 40 l/min, p_{max} = 315 bar
direct acting, poppet type, mechanical operation
Type series: W1T... / W1W... (installation deep)

- Slip-in cartridge valve
- For cavity AB
- All external parts with zinc-nickel plating according to DIN EN ISO 19598
- Installation in threaded port body type GABA
- Guided valve spool and poppet
- With bidirectional seat-valve shut-off

Phase-Out

Description

The 2-way/2-position solenoid-operated directional seat valves, series W1T... / W1W... (installation deep), are size 6, direct acting, and pressure balanced screw-in valves. They are designed on the tried and tested principle of the guided poppet, the guide spool has a seal, and they are virtually leak-free in both directions of flow (bidirectional seat-valve shut-off). This type is the "deep" installation version, which fits into the cavity type according to the AD factory standard. For the "shallow" installation version, see separate data sheet. The hand lever can be turned through 360° and is available as a "detentable" (W1T...) or "non-detentable" (W1W...) model. All external parts of the valves are zinc-nickel plated and are thus suitable for use in the harshest operating environments. The slip-on coils can be replaced without opening the hydraulic envelope and can be positioned at any angle through 360°. These valves are predominantly used in certain mobile and industrial applications where leak-tight shut-off functions are crucially important. Examples are where loads, tensions, or clamping forces must be held without leakage. For self-assembly, please refer to the section related data sheets.

BUCHER hydraulics
WWW.SUMY.IR

Symbol

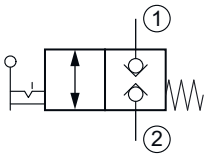

W1T...

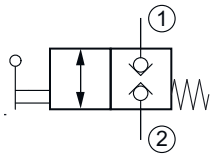

W1W...

Technical data

General characteristics	Description, value, unit
Product status	Phase-Out
Function group	Directional valve
Function	2-way/2-position
Design	Slip-in cartridge valve
Controls	mechanical operation
Characteristic	direct acting, poppet type
Construction size	NG 6
Mounting attitude	unrestricted
Weight	0.45 kg
Cavity acc. factory standard	For cavity AB
Tightening torque steel	5.2 Nm
Tightening torque aluminium	5.2 Nm
Tightening torque tolerance	± 5 %
Minimum ambient temperature	- 25 °C
Maximum ambient temperature	+ 80 °C
Surface protection	All external parts with zinc-nickel plating according to DIN EN ISO 19598
Sealing material	see ordering code
Seal kit order number	NBR: DS-387-N / FKM: DS-387-V

Hydraulic characteristics	Description, value, unit
Maximum operating pressure	315 bar
Maximum flow rate	40 l/min
Flow direction	see symbol
Hydraulic fluid	HL and HLP mineral oil according to DIN 51 524; other fluids on request!
Minimum fluid temperature	- 25 °C
Maximum fluid temperature	+ 80 °C
Viscosity range	10 ... 500 mm^2/s (cSt)
Recommended viscosity range	15 ... 250 mm^2/s (cSt)
Minimum fluid cleanliness (cleanlineless class according to ISO 4406:1999)	class 20/18/15

Phase-Out

BUCHER hydraulics
WWW.SUMY.IR

Mechanical characteristics	Description, value, unit
Execution	with hand lever, can be turned through 360°
Actuation angle	15 °

Performance graphs

measured with oil viscosity 33.0 mm²/s (cSt)

p = f (Q) Performance limit

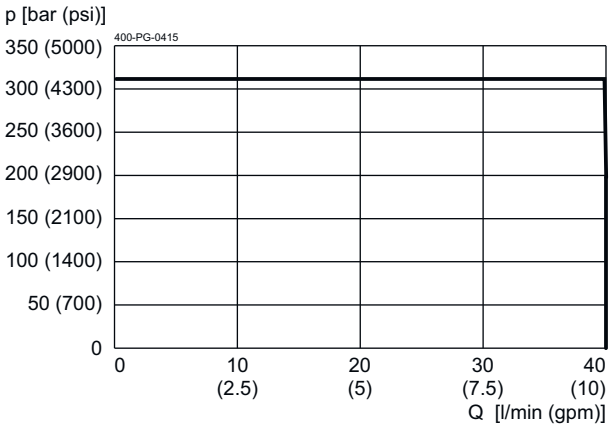

Δp = f (Q) Pressure drop-flow rate characteristic

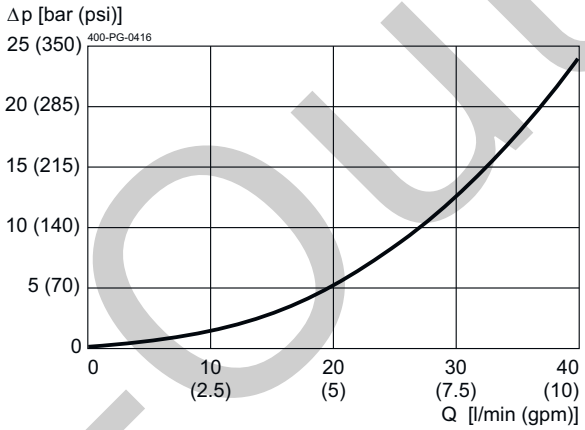

Dimensions and sectional view

Beispiel für die Masseinheit:
Example for the dimensional units:

0.79 = 0.79 mm millimeter
(.031) = 0.031" inch

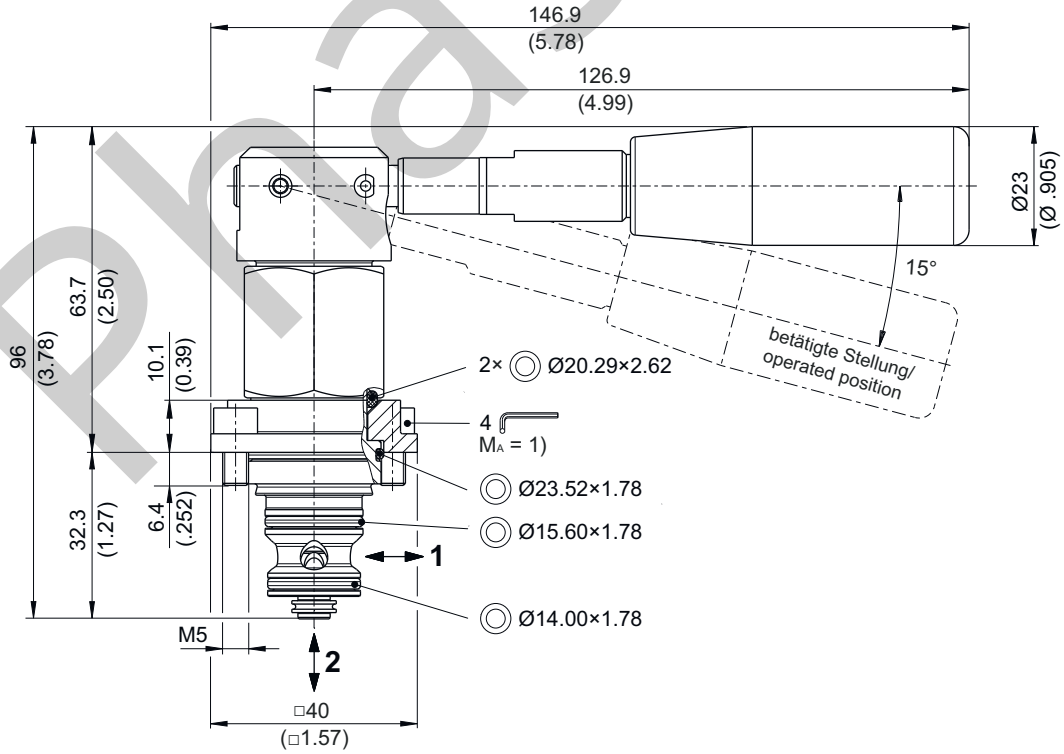

Phase-Out

Installation information

ATTENTION!
Only qualified personnel with mechanical skills may carry out any maintenance work. Generally, the only work that should ever be undertaken is to check, and possibly replace, the seals. When changing seals, oil or grease the new seals thoroughly before fitting them.

NOTE!
1) When fitting the slip-in valves, use the specified tightening torque for the mounting screws. The value can be found in the chapter "Technical data".

NOTE!
These valves can also be fitted in the cavity AD according to factory standard, and in such cases port 3 then has the same function as port 2.

IMPORTANT!
A “non-operated open” function can be created by using the 3/2 cartridge seat valve and the GADA line-mounting body. In this case, ports 2 and 3 are used. Port 1 is plugged.

Ordering code

Ex. | W1 | T | R | B | 2 |

W1 = directional valve, poppet-type, direct acting
T = 2-way/2-position, with hand lever detentable
W = 2-way/2-position, with hand lever non-detentable
R = NBR (nitril-butadien-rubber / BUNA) seals **(standard)**
T = FKM (fluorocarbon rubber / VITON) seals
(special seals - please consult BUCHER)
A…Q = standard model according to valid data sheet **(standard)**
Z…R = special model after consultation
1…9 = technical design no. (omit when ordering)

Related data sheets

Reference	Description
400-P-040011	Form tools
400-P-040102	Cavity AB
400-P-730111	Threaded port body GABA

Phase-Out

info.ch@bucherhydraulics.com **www.bucherhydraulics.com**

© 2025 by Bucher Hydraulics AG Frutigen, 3714 Frutigen, Switzerland

All rights reserved.
Data is provided for the purpose of product description only, and must not be construed as warranted characteristics in the legal sense. The information does not relieve users from the duty of conducting their own evaluations and tests. Because the products are subject to continual improvement, we reserve the right to amend the product specifications contained in this catalogue.

BUCHER hydraulics

MANUAL RELEASE VALVE
PULL TO OPEN

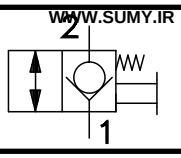

WWW.SUMY.IR

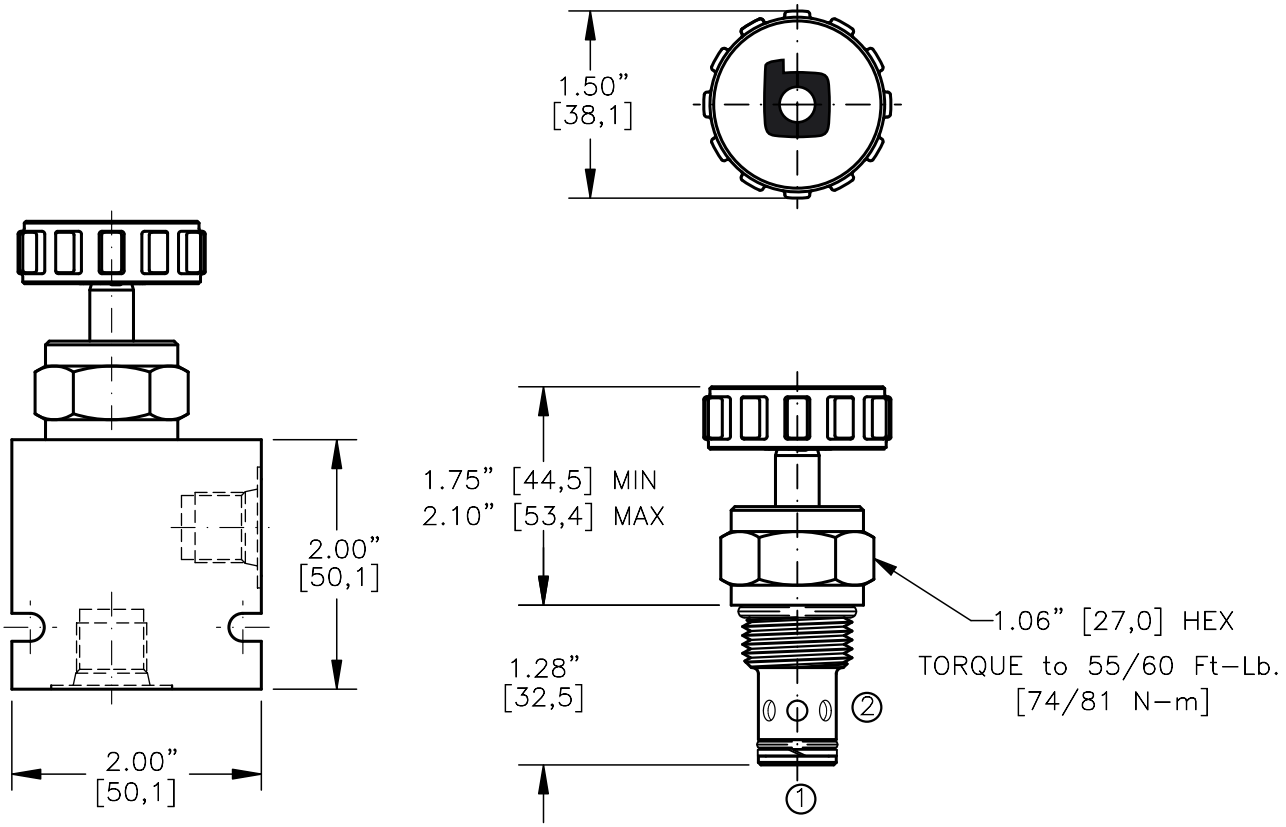

FOR ALUMINUM OR STEEL VALVE HOUSING CONFIGURATIONS SEE PAGE 0-012.1

MRPV-10-X-X-X

BASIC

SIZE
10 = 7/8"-14UNF

SEALS
N = BUNA "N"
V = VITON

ADJUSTMENT
H = METAL HANDKNOB
K = HANDKNOB
0 = NO KNOB

PORTS = CARTRIDGE ONLY
0 = G 1/4" BSPP
02BX = G 3/8" BSPP
03BX = SAE - #6
06TX = SAE - #8
08TX "A" = ALUM. HOUSING
"S" = STEEL HOUSING

FOR ADJUSTMENT CONTROL OPTIONS SEE PAGE 0-050.1

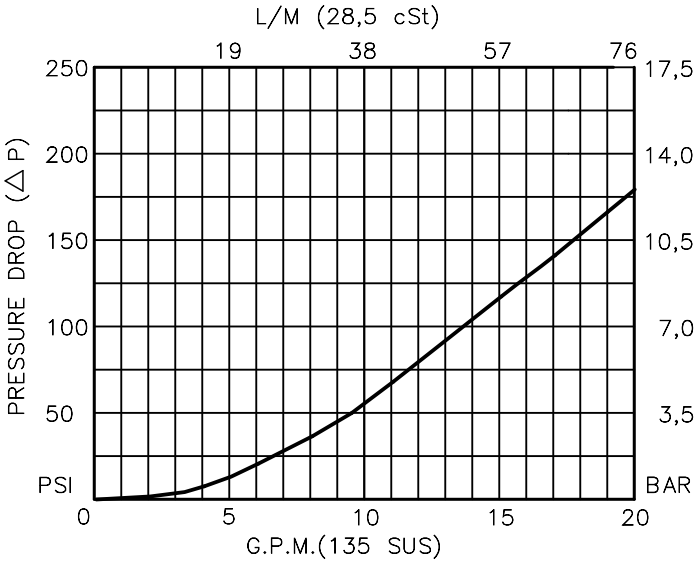

BUCHER hydraulics

WWW.SUMY.IR

MANUAL RELEASE VALVE
PULL TO OPEN

DESCRIPTION

This unit is a SCREW IN, cartridge type, guided poppet, spring biased closed, pull to open, hydraulic manual release valve.

OPERATIONS

This valve allows free flow from port 1 to port 2 at 175 PSI [12,0 BAR] and blocks flow from port 2 to port 1 or holding a load.

FEATURES AND BENEFITS

Low effort leakproof valve stem; knob is optional.
Pull to open mechanical effort at rated pressure is 17.5 LBS [8,0 KG.]
All external carbon steel parts are plated for longer life against the elements.
All cartridge valves are 100% functionally tested.
Industry common cavity.

SPECIFICATIONS

OPERATING PRESSURE: 5,000 PSI [350 Bar]
PROOF PRESSURE: 10,000 PSI [700 Bar]
FLOW:18.0 GPM [70 l/m] nominal. See performance chart.
INTERNAL LEAKAGE: 5 drops per minute maximum @ 5,000 PSI (350 Bar)
VALVE HOUSINGS: 2500 PSI [175 Bar] = Aluminum – Anodized.
5000 PSI [350 Bar] = Steel – Unplated.
OPERATING TEMPERATURE: –40° to +250° F. [–40° to +120° C.]
OPERATING MEDIA: All general purpose hydraulic fluids such as MIL–H–5606, SAE–#10, SAE–#20, etc.
INSTALATION: No restrictions.
SEAL KIT: SKN–1021 Buna "N".
SKV–1021 Viton.
WEIGHT: .31 lb [.14 kg] cartridge only.
VALVE CAVITY: #C1020, See Page 0–012.0.

info.el@bucherhydraulics.com

www.bucherhydraulics.com/commoncavity

© 2015 by Bucher Hydraulics, Inc., 2545 Northwest Parkway, Elgin, Illinois 60124, USA
All rights reserved.
Data is provided for the purpose of product description only, and must not be construed as warranted characteristics in the legal sense. The information does not relieve users from the duty of conducting their own evaluations and tests. Because the products are subject to continual improvement, we reserve the right to amend the product specifications contained in this catalogue.

BUCHER hydraulics
WWW.SUMY.IR

Directional valve 2-way/2-position

Q_{max} = 40 l/min, p_{max} = 315 bar
direct acting, poppet type, pneumatical operation
Type series: W1Q_B...

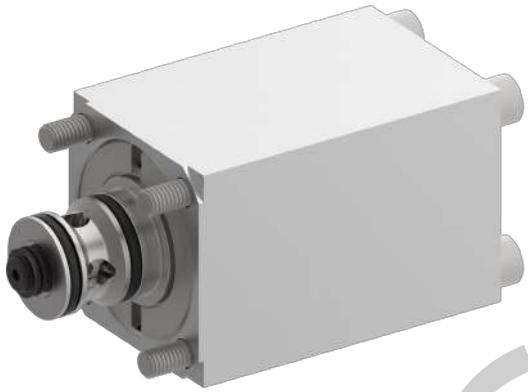

- Slip-in cartridge valve
- For cavity AA
- All external parts with zinc-nickel plating according to DIN EN ISO 19598
- Guided valve spool and poppet
- With bidirectional seat-valve shut-off
- Control head is hard-anodized aluminium
- Closed in the non-operated condition

Phase-Out

Description

The 2-way/2-position directional seat valves, series W1Q..., are size 6, pneumatically operated, direct acting, pressure balanced, push-in valves. In the normal condition (non-operated), flow is shut off without leakage. They are designed on the tried and tested principle of the guided poppet, and the guide spool has a seal. The pneumatic control head has a G 1/8" threaded port for the air feed. All external parts of cartridge are zinc-nickel plated, the aluminum control head is hard-anodized, and the valve is thus suitable for use in the harshest operating environments. These valves are predominantly used in certain mobile and industrial applications where leak-tight shut-off functions are crucially important. Examples are where loads, tensions, or clamping forces must be held without leakage. For self-assembly, please refer to the section related data sheets.

Symbol

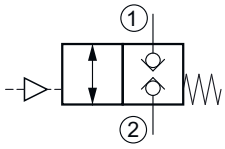

WWW.SUMY.IR

Technical data

General characteristics	Description, value, unit
Product status	Phase-Out
Alternative product	AODV-10-_-C3-... (520-P-093220)
Function group	Directional valve
Function	2-way/2-position
Design	Slip-in cartridge valve
Controls	pneumatical operation
Characteristic	direct acting, poppet type
Construction size	NG 6
Mounting attitude	unrestricted
Weight	0.45 kg
Cavity acc. factory standard	For cavity AA
Tightening torque steel	5.2 Nm
Tightening torque aluminium	5.2 Nm
Tightening torque tolerance	± 5 %
Minimum ambient temperature	- 25 °C
Maximum ambient temperature	+ 80 °C
Surface protection	All external parts with zinc-nickel plating according to DIN EN ISO 19598
Sealing material	see ordering code
Seal kit order number	NBR: DS-387-N / FKM: DS-387-V

NOTE!
Pneumatic pilot pressure min. 6.5 bar / 90 psi

Hydraulic characteristics	Description, value, unit
Maximum operating pressure	315 bar
Maximum flow rate	40 l/min
Flow direction	see symbol
Hydraulic fluid	HL and HLP mineral oil according to DIN 51 524; other fluids on request!
Minimum fluid temperature	- 25 °C
Maximum fluid temperature	+ 80 °C
Viscosity range	10 ... 650 mm^2/s (cSt)
Recommended viscosity range	15 ... 250 mm^2/s (cSt)
Minimum fluid cleanliness (cleanlineless class according to ISO 4406:1999)	class 20/18/15
Pilot operating media	compressed air
Pilot pressure	min. 6.5 bar

Phase-Out

Performance graphs

measured with oil viscosity 33.0 mm²/s (cSt)

p = f (Q) Performance limit

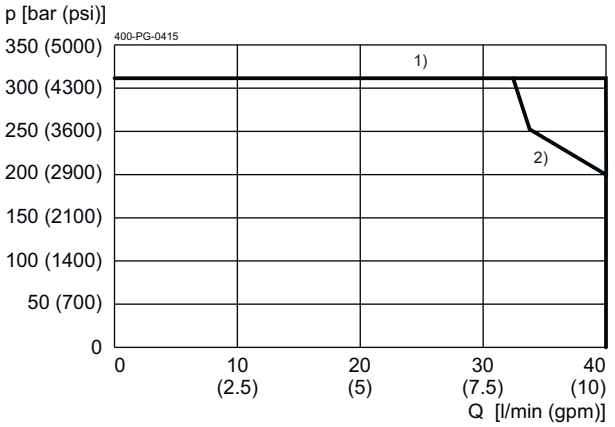

1) = 2 → 1
2) = 1 → 2

Δp = f (Q) Pressure drop-flow rate characteristic

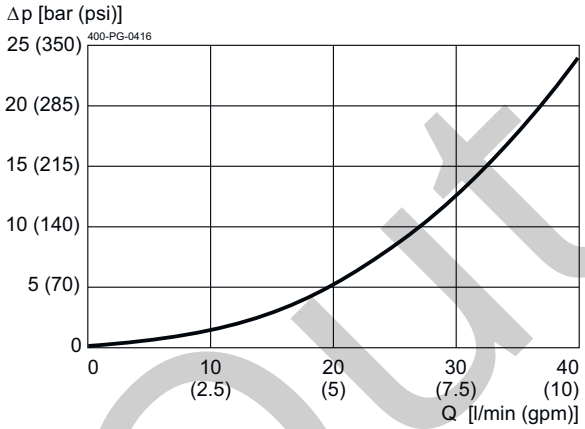

Dimensions and sectional view

Beispiel für die Masseinheit:
Example for the dimensional units:

0.79 = 0.79 mm millimeter
(.031) = 0.031" inch

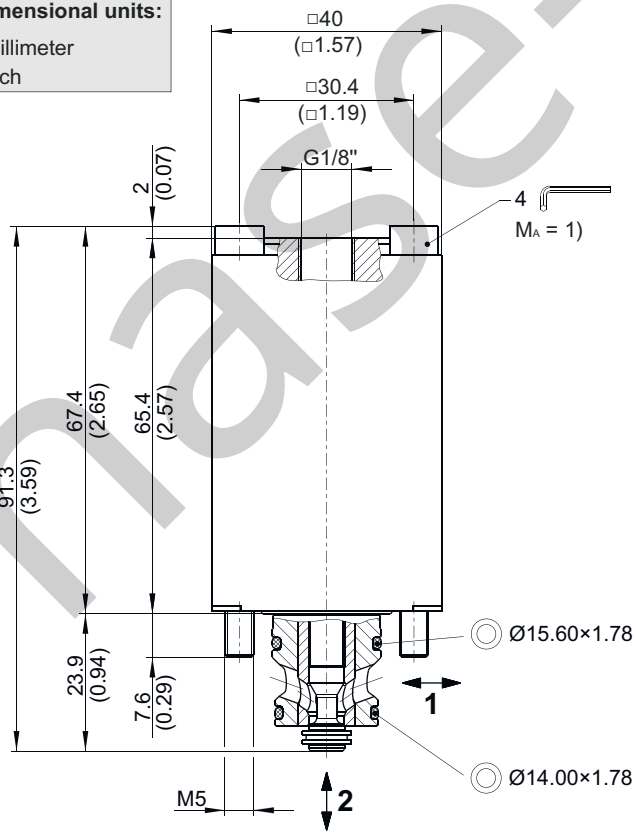

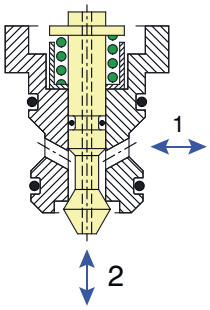

Phase-Out

Installation information

ATTENTION!
Only qualified personnel with mechanical skills may carry out any maintenance work. Generally, the only work that should ever be undertaken is to check, and possibly replace, the seals. When changing seals, oil or grease the new seals thoroughly before fitting them.

NOTE!
1) When fitting the slip-in valves, use the specified tightening torque for the mounting screws. The value can be found in the chapter "Technical data".

IMPORTANT!
These valves can also be fitted in the cavity AC according to factory standard, and in such cases port 3 then has the same function as port 2.

Ordering code

Ex. W1 Q Q B 3

W1 = directional valve, poppet-type, direct acting
Q = 2-way/2-position, pneumatic operation
Q = NBR (BUNA) seals **(standard)**
S = FKM (VITON) seals
A…Q = standard model according to valid data sheet **(standard)**
Z…R = special model after consultation
1…9 = technical design no. directional valve (omit when ordering)

Related data sheets

Reference	Description
400-P-040011	Form tools
400-P-040101	Cavity AA

Phase-Out

info.ch@bucherhydraulics.com **www.bucherhydraulics.com**

© 2025 by Bucher Hydraulics AG Frutigen, 3714 Frutigen, Switzerland

All rights reserved.
Data is provided for the purpose of product description only, and must not be construed as warranted characteristics in the legal sense. The information does not relieve users from the duty of conducting their own evaluations and tests. Because the products are subject to continual improvement, we reserve the right to amend the product specifications contained in this catalogue.

BUCHER hydraulics

WWW.SUMY.IR

Directional valve 2-way/2-position

Q_{max} = 40 l/min, p_{max} = 350 bar
pilot operated, poppet type, switching position monitored, switching solenoid
Type series: WRVP22GP-SA-5H-...A

- Screw-in cartridge valve
- For cavity BH/C0820
- All external parts with zinc-nickel plating according to DIN EN ISO 19598
- Installation in threaded port body type GBH-38
- With integral electronic monitoring of operating position
- No external pilot drain required
- Seat tight shut-off from 2 to 1
- High pressure wet-armature solenoids
- The slip-on coil can be rotated, and it can be replaced without opening the hydraulic envelope
- Various plug-connector systems and voltages are available

Description

These 2/2 solenoid-operated cartridge valves, series WRVP22GP-SA-5H-..., feature monitoring of the operating positions and are size 5, two stage, high performance screw-in cartridges with an 3/4-16 UNF-2A mounting thread. The main and pilot stages are both designed on the poppet/seat principle, and the 2 to 1 flow path is therefore virtually leak-free. The safe switch position is always the non-operated valve position. To ensure that electrical line interruptions of any kind do not result in unsafe conditions, the sensor's switch output is always at High in the non-operated state. The safe switch position is considered to have been reached when the spool is in the overlap state. All external parts of the cartridge are zinc-nickel plated and are thus suitable for use in the harshest operating environments. The slip-on coils can be replaced without opening the hydraulic circuit or removing the electronics (sensor), and can be positioned at any angle through 360°. These screw-in valves are predominantly used in certain mobile and industrial applications where shut-off functions are crucially important. Examples are where loads, tensions, or clamping forces must be held without leakage, or where an operating position must be monitored. If you intend to install the valve yourself, please refer to the section "Related data sheets".

Symbol

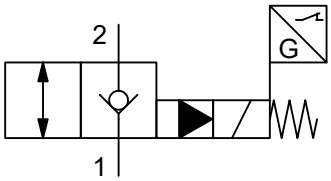

Simplified

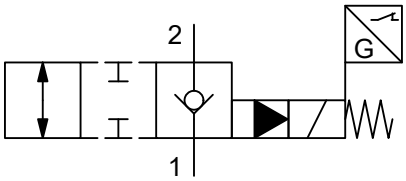

Detailed

Technical data

General characteristics	Description, value, unit
Function group	Directional valve
Function	2-way/2-position
Design	Screw-in cartridge valve
Controls	switching solenoid
Characteristic	pilot operated, poppet type, switching position monitored
MTTFd value	150 years
Construction size	NG 5
Thread size	3/4-16 UNF-2A
Mounting attitude	unrestricted
Weight	0.58 kg
Cavity acc. factory standard	For cavity BH/C0820
Tightening torque steel	50 Nm
Tightening torque aluminium	50 Nm
Tightening torque tolerance	± 10 %
Minimum ambient temperature	- 30 °C
Maximum ambient temperature	+ 50 °C
Surface protection	All external parts with zinc-nickel plating according to DIN EN ISO 19598
Sealing material	see ordering code
Seal kit order number	NBR: DS-502-N / FKM: DS-502-V

Hydraulic characteristics	Description, value, unit
Maximum operating pressure	350 bar
Maximum flow rate	40 l/min
Flow direction	see symbol
Hydraulic fluid	HL and HLP mineral oil according to DIN 51 524; other fluids on request!
Minimum fluid temperature	- 30 °C
Maximum fluid temperature	+ 80 °C
Viscosity range	10 ... 500 mm^2/s (cSt)
Recommended viscosity range	15 ... 250 mm^2/s (cSt)
Minimum fluid cleanliness (cleanlineless class according to ISO 4406:1999)	class 20/18/15

WWW.SUMY.IR

NOTE!
Slightly increased leakage is possible in dynamic use in the lowest temperature range.

Electric characteristics	Description, value, unit
Actuator type	solenoid coil
Solenoid coils type	36X48/16.1
Supply voltage DC	12/24 V DC
Supply voltage tolerance	± 10 %
Nominal power consumption	19 W
Switching time	Switching time measured at: UN: Δp = 280 bar; Q = 32 l/min; TAmbient = 20 °C; ϑ = 46 mm2/s 65 ms (energizing) 58 ms (de-energizing)
Relative duty cycle	100 %
Electrical connection coil	several connection types available, see ordering code
Protection class solenoid coil to ISO 20 653 / EN 60 529	several classes of protection available, see ordering code (with appropriate mating connector and proper fitting and sealing)

NOTE!
The switching time can be strongly dependent on flow rate, pressure, oil viscosity and the dwell time under pressure. In practice, the switching time may therefore deviate from the specified value range.

Sensor characteristics	Description, value, unit
Supply voltage (+Vs)	10...30 V DC
Maximum load current	100 mA
Short-circuit protection	Permanently resistant to load short circuit
Protection class sensor to ISO 20653 / EN 60529	IP 67 / IP 69K (with appropriate mating connector and proper fitting and sealing)
Vibration test	EN 60068-2-6 – 55 Hz, amplitude 1 mm, 3 axes, 30 min
Shock test	EN 60068-2-27 – half sine wave, 30 gn 11 ms half sine wave, 3 axes
EMC immunity	EN 61000-6-2
EMC interference emission	EN 61000-6-4
MTTF (40° C) according to EN ISO 13849-1 Annex C.5	320 years
MTTFD according to EN ISO 13849-1 Annex C.5.1	640 years
Electrical connection	device plug M12x1, 4-pin (male), A-coded

WWW.SUMY.IR

Performance graphs

measured with oil viscosity 33.0 mm²/s (cSt), coil at steady-state temperature and 10 % undervoltage

p = f (Q) Performance limit

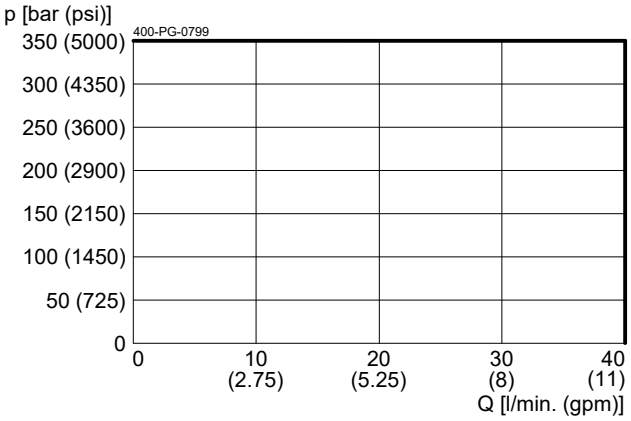

Δp = f (Q) Pressure drop-flow rate characteristic

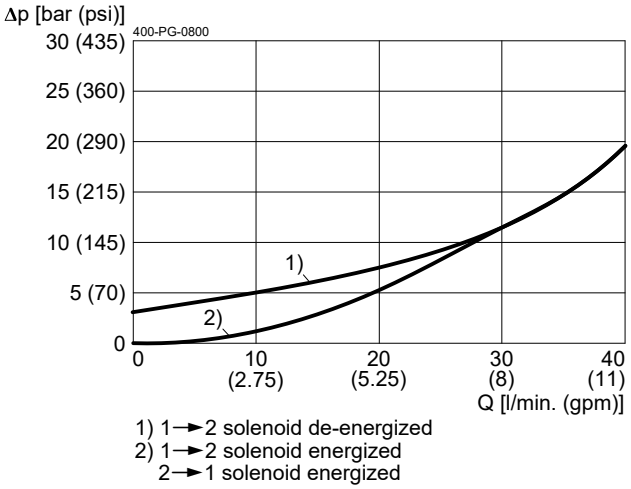

Dimensions and sectional view

Beispiel für die Masseinheit:
Exampel for the dimensional units:

0.79	= 0.79 mm	millimeter
[.031]	= 0.031"	inch

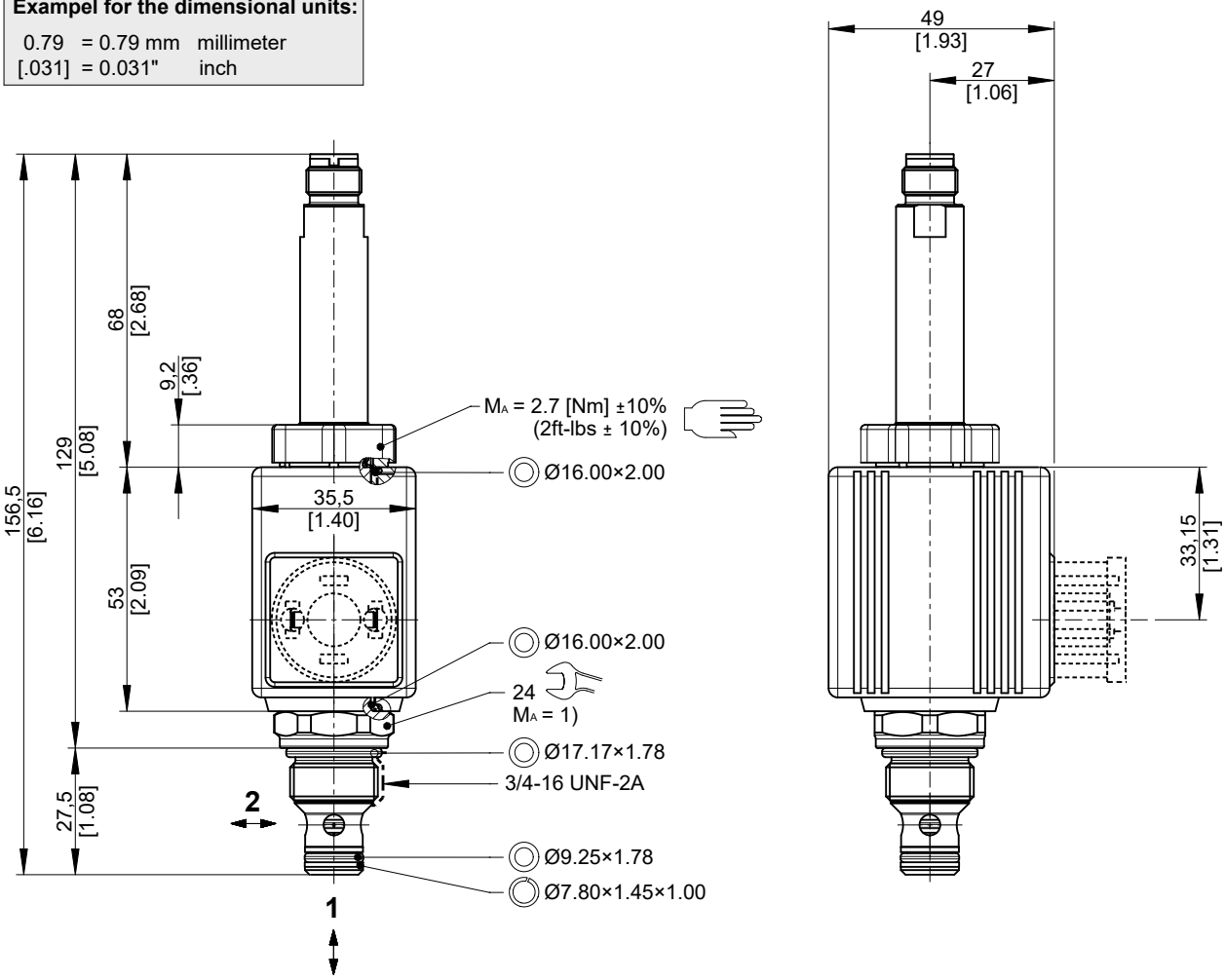

Installation information

NOTE!
1) When fitting the screw-in cartridge valve, use the specified tightening torque. The value can be found in the chapter "Technical data".

ATTENTION!
Only qualified personnel with mechanical skills may carry out any maintenance work. Generally, the only work that should ever be undertaken is to check, and possibly replace, the seals. When changing seals, oil or grease the new seals thoroughly before fitting them.

ATTENTION!
Using screw-in valves and components that include monitoring of the operating position: do not use the signal from the position switch to directly activate a safety-related control function. In addition, only use solenoid coils that have a protection diode.

ATTENTION!
The safe switch position is the non-operated valve position. In accordance with the criteria for proven safety principles, the status of the position signal changes during the overlap stroke (before the valve actually opens).

WWW.SUMY.IR

IMPORTANT!
When connecting the sensor (for monitoring the operating position), note the information regarding pin assignment in this data sheet. The sensor cable must not be subjected to any pulling forces. Note also that opening the screw-in valve or removing the electronics (sensor) is not permitted!

NOTE!
The seals are not available individually. The seal kit order number can be found in the chapter "Technical data".

NOTE!
To achieve the screw-in valve's maximum performance rating, fit the solenoid coil as shown (with the plug pins nearest the valve body).

Connection diagram for sensor

Standard "A", 1 switching point:

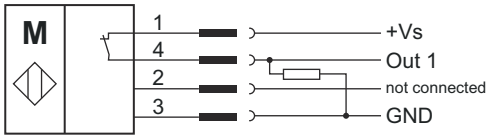

	Version A	
Valve status	Out 1	Out 2
Unactivated	high	-
Actuated	low	-

Ordering code

BUCHER hydraulics
WWW.SUMY.IR

Directional valve 2-way/2-position

Q_{max} = 80 l/min, p_{max} = 350 bar
pilot operated, poppet type, switching position monitored, switching solenoid
Type series: WRVP22GP_-SA-10F-...A

- Screw-in cartridge valve
- For cavity HF/C1220A
- All external parts with zinc-nickel plating according to DIN EN ISO 19598
- Installation in threaded port body type GHF-34
- With integral electronic monitoring of operating position
- Seat tight shut-off from 2 to 1
- High pressure wet-armature solenoids
- The slip-on coil can be rotated, and it can be replaced without opening the hydraulic envelope
- Various plug-connector systems and voltages are available

Description

These 2/2 solenoid-operated cartridge valves, series WRVP22GP_-SA-10F-..., feature monitoring of the operating positions and are size 10, two stage, high performance screw-in cartridges with an 1 1/16-12 UN-2A mounting thread. The main and pilot stages are both designed on the poppet/seat principle, and the 2 to 1 flow path is therefore virtually leak-free. The safe switch position is always the non-operated valve position. To ensure that electrical line interruptions of any kind do not result in unsafe conditions, the sensor's switch output is always at High in the non-operated state. The safe switch position is considered to have been reached when the spool is in the overlap state. All external parts of the cartridge are zinc-nickel plated and are thus suitable for use in the harshest operating environments. The slip-on coils can be replaced without opening the hydraulic circuit or removing the electronics (sensor), and can be positioned at any angle through 360°. These screw-in valves are predominantly used in certain mobile and industrial applications where shut-off functions are crucially important. Examples are where loads, tensions, or clamping forces must be held without leakage, or where an operating position must be monitored. If you intend to install the valve yourself, please refer to the section "Related data sheets".

Symbol

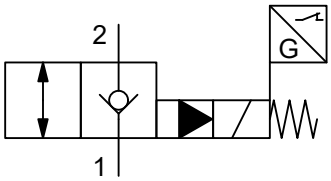

Simplified

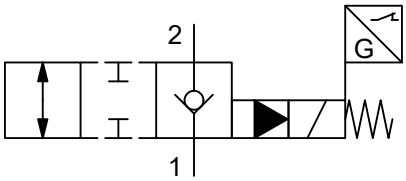

Detailed

Technical data

General characteristics	Description, value, unit
Function group	Directional valve
Function	2-way/2-position
Design	Screw-in cartridge valve
Controls	switching solenoid
Characteristic	pilot operated, poppet type, switching position monitored
MTTFd value	150 years
Construction size	NG 10
Thread size	1 1/16-12 UN-2A
Mounting attitude	unrestricted
Weight	1.13 kg
Cavity acc. factory standard	For cavity HF/C1220A
Tightening torque steel	150 Nm
Tightening torque aluminium	150 Nm
Tightening torque tolerance	± 10 %
Minimum ambient temperature	- 30 °C
Maximum ambient temperature	+ 50 °C
Surface protection	All external parts with zinc-nickel plating according to DIN EN ISO 19598
Sealing material	see ordering code
Seal kit order number	NBR: DS-518-N / FKM: DS-518-V

Hydraulic characteristics	Description, value, unit
Maximum operating pressure	350 bar
Maximum flow rate	80 l/min
Flow direction	see symbol
Hydraulic fluid	HL and HLP mineral oil according to DIN 51 524; other fluids on request!
Minimum fluid temperature	- 30 °C
Maximum fluid temperature	+ 80 °C
Viscosity range	10 ... 500 mm^2/s (cSt)
Recommended viscosity range	15 ... 250 mm^2/s (cSt)
Minimum fluid cleanliness (cleanlineless class according to ISO 4406:1999)	class 20/18/15

WWW.SUMY.IR

NOTE!
Slightly increased leakage is possible in dynamic use in the lowest temperature range.

Electric characteristics	Description, value, unit
Actuator type	solenoid coil
Solenoid coils type	36X48/16.1
Supply voltage DC	12/24 V DC
Supply voltage tolerance	± 10 %
Nominal power consumption	19 W
Switching time	Switching time measured at: UN: Δp = 280 bar; Q = 64 l/min; TAmbient = 40 °C; ϑ = 46 mm2/s 78 ms (energizing) 67 ms (de-energizing)
Relative duty cycle	100 %
Electrical connection coil	several connection types available, see ordering code
Protection class solenoid coil to ISO 20 653 / EN 60 529	several classes of protection available, see ordering code (with appropriate mating connector and proper fitting and sealing)

NOTE!
The switching time can be strongly dependent on flow rate, pressure, oil viscosity and the dwell time under pressure. In practice, the switching time may therefore deviate from the specified value range.

Sensor characteristics	Description, value, unit
Supply voltage (+Vs)	10...30 V DC
Maximum load current	100 mA
Short-circuit protection	Permanently resistant to load short circuit
Protection class sensor to ISO 20653 / EN 60529	IP 67 / IP 69K (with appropriate mating connector and proper fitting and sealing)
Vibration test	EN 60068-2-6 – 55 Hz, amplitude 1 mm, 3 axes, 30 min
Shock test	EN 60068-2-27 – half sine wave, 30 gn 11 ms half sine wave, 3 axes
EMC immunity	EN 61000-6-2
EMC interference emission	EN 61000-6-4
MTTF (40° C) according to EN ISO 13849-1 Annex C.5	320 years
MTTFD according to EN ISO 13849-1 Annex C.5.1	640 years
Electrical connection	device plug M12x1, 4-pin (male), A-coded

Performance graphs

measured with oil viscosity 33.0 mm²/s (cSt), coil at steady-state temperature and 10 % undervoltage

Δp = f (Q) Pressure drop-flow rate characteristic

With return spring for main spool (Type R)
To assist the closingforce (standard)

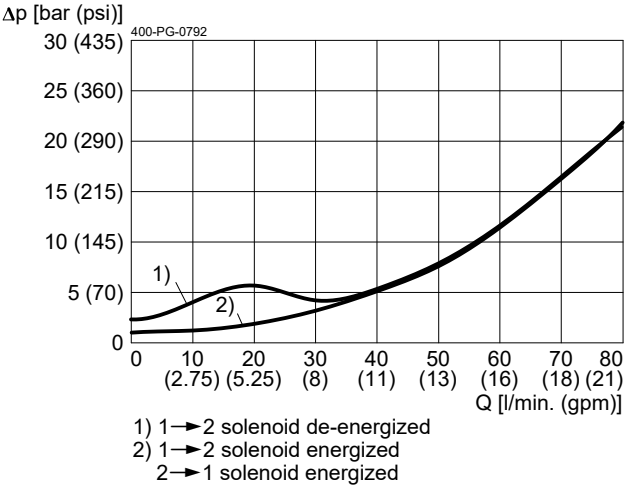

Δp = f (Q) Pressure drop-flow rate characteristic

Without return spring for main spool (Type O)
Δp optimized (on request)

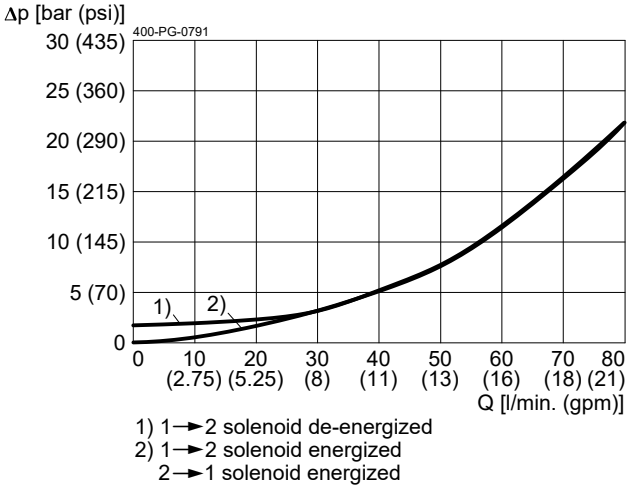

p = f (Q) Performance limit

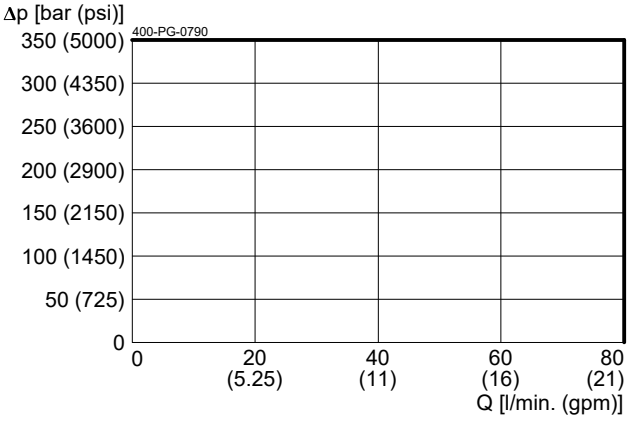

Dimensions and sectional view

Beispiel für die Masseinheit:
Exampel for the dimensional units:

0.79	= 0.79 mm	millimeter
[.031]	= 0.031"	inch

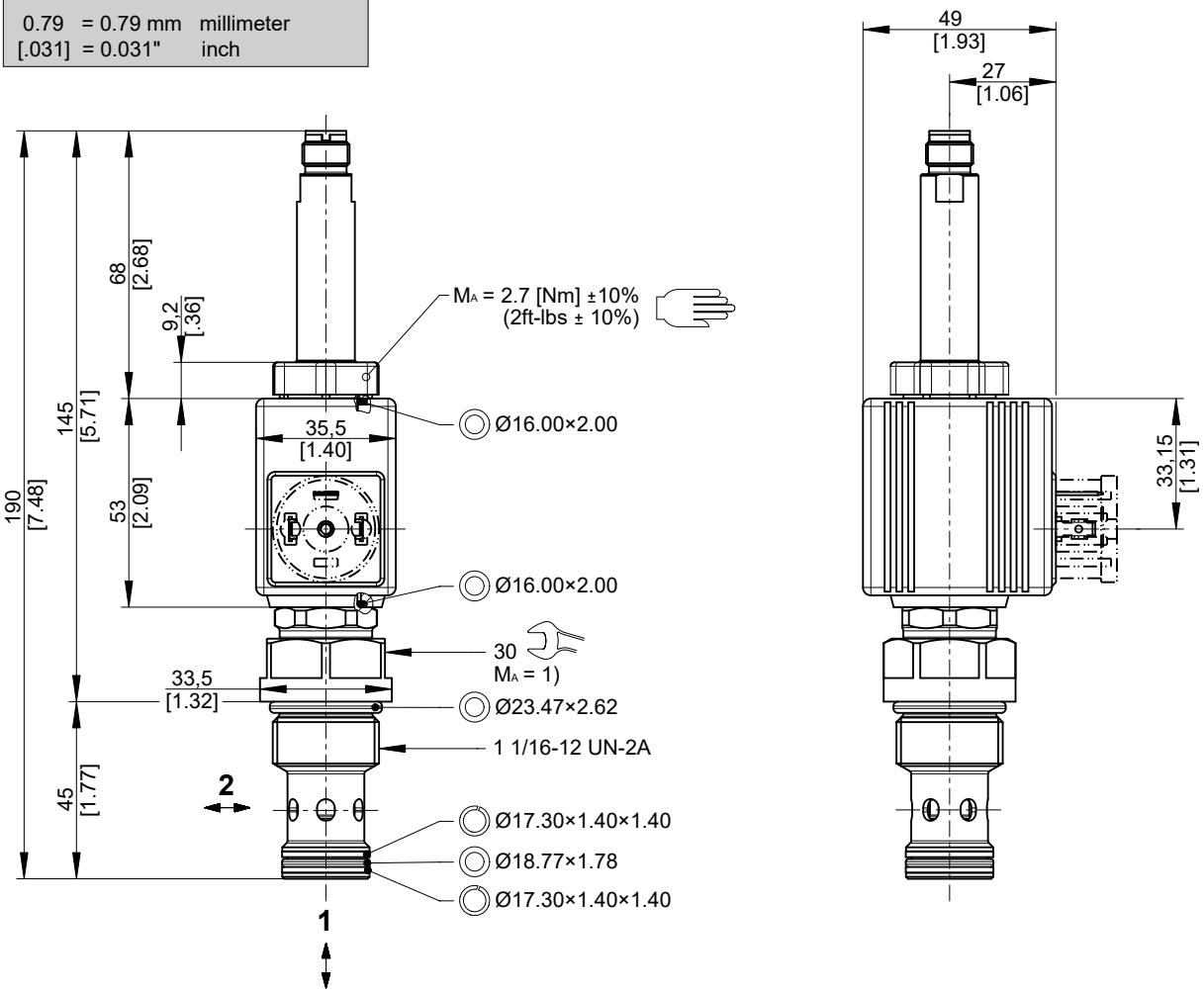

Installation information

NOTE!
1) When fitting the screw-in cartridge valve, use the specified tightening torque. The value can be found in the chapter "Technical data".

ATTENTION!
Only qualified personnel with mechanical skills may carry out any maintenance work. Generally, the only work that should ever be undertaken is to check, and possibly replace, the seals. When changing seals, oil or grease the new seals thoroughly before fitting them.

ATTENTION!
Using screw-in valves and components that include monitoring of the operating position: do not use the signal from the position switch to directly activate a safety-related control function. In addition, only use solenoid coils that have a protection diode.

ATTENTION!
The safe switch position is the non-operated valve position. In accordance with the criteria for proven safety principles, the status of the position signal changes during the overlap stroke (before the valve actually opens).

WWW.SUMY.IR

IMPORTANT!
When connecting the sensor (for monitoring the operating position), note the information regarding pin assignment in this data sheet. The sensor cable must not be subjected to any pulling forces. Note also that opening the screw-in valve or removing the electronics (sensor) is not permitted!

NOTE!
The seals are not available individually. The seal kit order number can be found in the chapter "Technical data".

NOTE!
To achieve the screw-in valve's maximum performance rating, fit the solenoid coil as shown (with the plug pins nearest the valve body).

Connection diagram for sensor

Standard "A", 1 switching point:

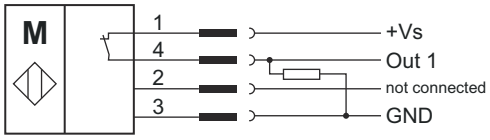

	Version A	
Valve status	Out 1	Out 2
Unactivated	high	-
Actuated	low	-

Ordering code

Ex. W R V P 22G P R - S A - 10 F - N A 1 24 D _ _

W	=	directional valve
R	=	check valve function
V	=	pilot operated
P	=	electrically operated, COIL 36X48, 19 W
22G	=	2-way/2-position function, de-energized closed
P	=	positive overlap
R	=	with return spring for main spool **(standard)**
O	=	without return spring for main spool (on request)
S	=	with operating-position monitoring
A	=	switching output, PNP-normally closed
10	=	nominal size 10
F	=	cavity type HF/C1220A
N	=	NBR (nitril-butadien-rubber / BUNA) seals **(standard)**
V	=	FKM (fluorocarbon rubber / VITON) seals (special seals on request)
A ... Q	=	standard model according to valid data sheet
Z ... R	=	special model (on request)
1 ... 9	=	technical design no. (omit by ordering)
…	=	voltage e.g. 24 (24 V)
D	=	current DC
GR	=	DIN EN 175301-803 connection — 3-pole 2 P+E, with protection diode, (IP 65) **(standard)**
JR	=	Junior Timer plug connection — 2-pole radial, with protection diode, (IP 65)
UR	=	Deutsch plug connection DT04-2P — 2-pole radial, with protection diode, (IP 67/69K)
		other plug-variants, please consult BUCHER.
(blank)	=	connection without mating plug **(standard)**
Q	=	only connection “GR“ with mating plug

mating plug not supplied

IMPORTANT!
Not every combination of voltage values and plug connections available.

Related data sheets

Reference	Description
400-P-040011	Form tools
400-P-010101	MTTFd Values for Hydraulic Valves
400-P-120112	Solenoid coil 36X48/16.1
400-P-065111	Cavity HF/C1220A
400-P-740551	Threaded port body GHF-34...

info.ch@bucherhydraulics.com **www.bucherhydraulics.com**

© 2025 by Bucher Hydraulics AG Frutigen, 3714 Frutigen, Switzerland

All rights reserved.
Data is provided for the purpose of product description only, and must not be construed as warranted characteristics in the legal sense. The information does not relieve users from the duty of conducting their own evaluations and tests. Because the products are subject to continual improvement, we reserve the right to amend the product specifications contained in this catalogue.

BUCHER hydraulics
WWW.SUMY.IR

Directional valve 2-way/2-position

Q_{max} = 80 l/min, p_{max} = 350 bar
Pilot operated, poppet type, switching position monitored, switching solenoid
Type series: WSVP22GPR-SA-10F-_A...

- Screw-in cartridge valve for cavity HF/C1220A
- All external parts with zinc-nickel plating according to DIN EN ISO 19598
- Installation in threaded port body type GHF-34
- With integral electronic monitoring of operating position
- With bidirectional seat-valve shut-off
- High pressure wet-armature solenoids
- The slip-on coil can be rotated, and it can be replaced without opening the hydraulic envelope
- Various plug-connector systems and voltages are available

Symbol

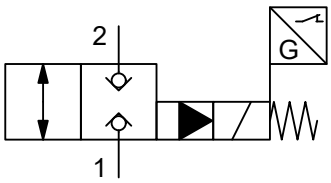

Simplified

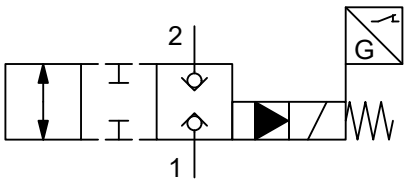

Detailed

Description

These 2/2 solenoid-operated cartridge valves, series WSVP22GPR-SA-10F..., feature monitoring of the operating positions and are size 10, two stage, high performance screw-in cartridges with an 1 1/16-12 UN-2A mounting thread. The main and pilot stages are both designed on the poppet/seat principle, and they are therefore virtually leak-free in both directions of flow. The safe switch position is always the non-operated valve position. To ensure that electrical line interruptions of any kind do not result in unsafe conditions, the sensor's switch output is always at High in the non-operated state. The safe switch position is considered to have been reached when the spool is in the overlap state. All external parts of the cartridge are zinc-nickel plated and are thus suitable for use in the harshest operating environments. The slip-on coils can be replaced without opening the hydraulic circuit or removing the electronics (sensor), and can be positioned at any angle through 360°. These screw-in valves are predominantly used in certain mobile and industrial applications where shut-off functions are crucially important. Examples are where loads, tensions, or clamping forces must be held without leakage, or where an operating position must be monitored. If you intend

to install the valve yourself, please refer to the section "Related data sheets".

Technical data

General characteristics	Description, value, unit
Function group	directional valve
Function	2-way/2-position
Design	screw-in cartridge valve
Controls	switching solenoid
Characteristic	pilot operated, poppet type, switching position monitored
MTTFd value	150 years
Construction size	NG 10
Thread size	1 1/16-12 UN-2A
Mounting attitude	unrestricted
Weight	0.72 kg
Cavity acc. factory standard	HF/C1220A
Tightening torque steel	65 Nm
Tightening torque aluminium	50 Nm
Tightening torque tolerance	± 10 %
Minimum ambient temperature	- 30 °C
Maximum ambient temperature	+ 50 °C
Surface protection	all external parts with zinc-nickel plating according to DIN EN ISO 19598
Sealing material	see ordering code
Seal kit order number	NBR: DS-518-N / FKM: DS-518-V

Hydraulic characteristics	Description, value, unit
Maximum operating pressure	350 bar
Maximum flow rate	80 l/min
Flow direction	see symbol
Hydraulic fluid	HL and HLP mineral oil according to DIN 51 524; other fluids on request!
Minimum fluid temperature	- 30 °C
Maximum fluid temperature	+ 80 °C
Viscosity range	10 ... 500 mm^2/s (cSt)
Recommended viscosity range	15 ... 250 mm^2/s (cSt)
Minimum fluid cleanliness (cleanlineless class according to ISO 4406:1999)	class 20/18/15

NOTE!
Slightly increased leakage is possible in dynamic use in the lowest temperature range.

WWW.SUMY.IR

Electric characteristics	Description, value, unit
Actuator type	solenoid coil
Solenoid coils type	36X48/16.1
Supply voltage DC	12/24 V DC
Supply voltage tolerance	± 10 %
Nominal power consumption	19 W
Switching time	Switching time measured at: UN: Δp = 280 bar; Q = 64 l/min; TAmbient = 40 °C; ϑ = 46 mm2/s 2 to 1: 67 ms (energizing) / 96 ms (de-energizing) 1 to 2: 65 ms (energizing) / 65 ms (de-energizing)
Relative duty cycle	100 %
Electrical connection coil	several connection types available, see ordering code
Protection class solenoid coil to ISO 20 653 / EN 60 529	several classes of protection available, see ordering code (with appropriate mating connector and proper fitting and sealing)

NOTE!
The switching time can be strongly dependent on flow rate, pressure, oil viscosity and the dwell time under pressure. In practice, the switching time may therefore deviate from the specified value range.

Sensor characteristics	Description, value, unit
Supply voltage (+Vs)	10...30 V DC
Maximum load current	100 mA
Short-circuit protection	Permanently resistant to load short circuit
Protection class sensor to ISO 20653 / EN 60529	IP 67 / IP 69K (with appropriate mating connector and proper fitting and sealing)
Vibration test	EN 60068-2-6 – 55 Hz, amplitude 1 mm, 3 axes, 30 min
Shock test	EN 60068-2-27 – half sine wave, 30 gn 11 ms half sine wave, 3 axes
EMC immunity	EN 61000-6-2
EMC interference emission	EN 61000-6-4
MTTF (40° C) according to EN ISO 13849-1 Annex C.5	320 years
MTTFD according to EN ISO 13849-1 Annex C.5.1	640 years
Electrical connection	device plug M12x1, 4-pin (male), A-coded

Performance graphs

measured with oil viscosity 33.0 mm²/s (cSt), coil at steady-state temperature and 10 % undervoltage

p = f (Q) Performance limit

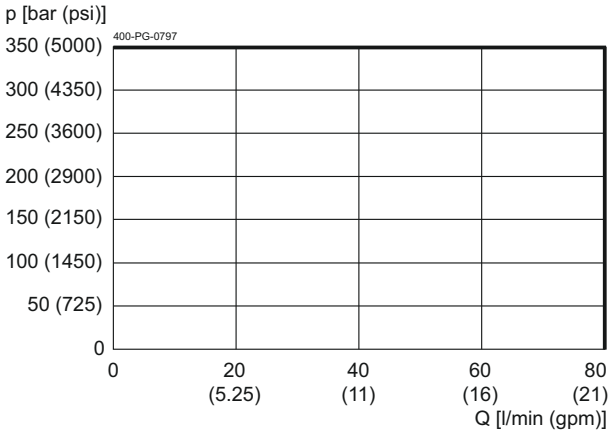

Δp = f (Q) Pressure drop-flow rate characteristic

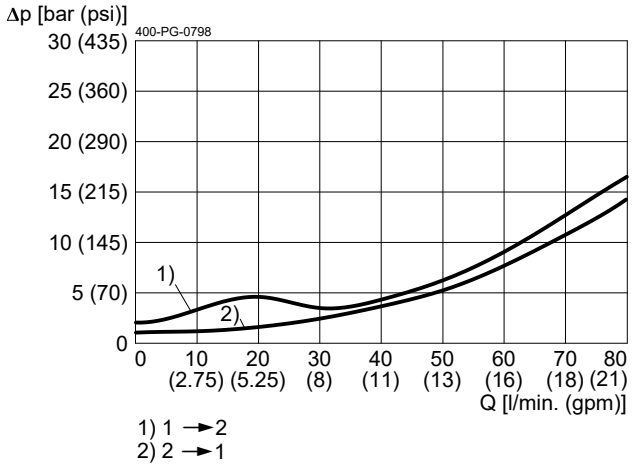

Installation

Beispiel für die Masseinheit:
Exampel for the dimensional units:

0.79	= 0.79 mm	millimeter
[.031]	= 0.031"	inch

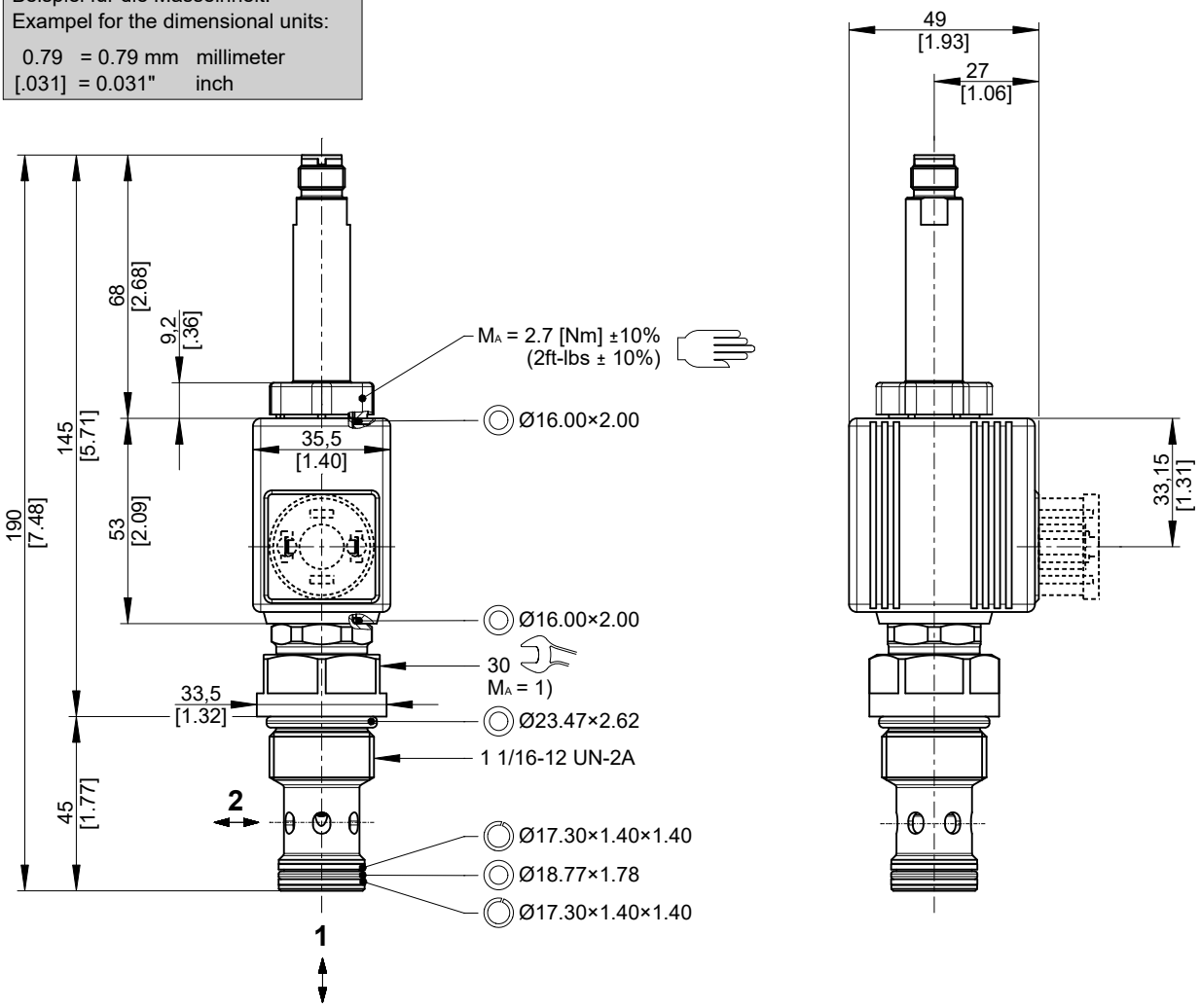

NOTE!
1) When fitting the screw-in cartridge valve, use the specified tightening torque. The value can be found in the chapter "Technical data".

ATTENTION!
Only qualified personnel with mechanical skills may carry out any maintenance work. Generally, the only work that should ever be undertaken is to check, and possibly replace, the seals. When changing seals, oil or grease the new seals thoroughly before fitting them.

ATTENTION!
Using screw-in valves and components that include monitoring of the operating position: do not use the signal from the position switch to directly activate a safety-related control function. In addition, only use solenoid coils that have a protection diode.

ATTENTION!
The safe switch position is the non-operated valve position. In accordance with the criteria for proven safety principles, the status of the position signal changes during the overlap stroke (before the valve actually opens).

Connection diagram for sensor

Standard "A", 1 switching point:

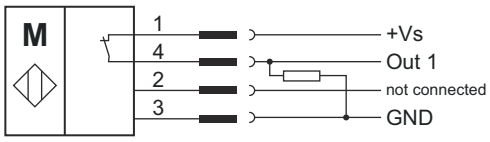

	Version A	
Valve status	Out 1	Out 2
Unactivated	high	-
Actuated	low	-

IMPORTANT!
When connecting the sensor (for monitoring the operating position), note the information regarding pin assignment in this data sheet. The sensor cable must not be subjected to any pulling forces. Note also that opening the screw-in valve or removing the electronics (sensor) is not permitted!

NOTE!
To achieve the screw-in valve's maximum performance rating, fit the solenoid coil as shown (with the plug pins nearest the valve body).

NOTE!
The seals are not available individually. The seal kit order number can be found in the chapter "Technical data".

Ordering code

Ex. W S V P 22G P R - S A - 10 F - N A 1 24 D _ _

W	=	directional valve
S	=	bidirectional seat-valve shut-off
V	=	pilot operated
P	=	electrically operated, COIL 36X48, 19 W
22G	=	2-way/2-position function, de-energized closed
P	=	positive overlap
R	=	with return spring for main spool
S	=	with operating-position monitoring
A	=	PNP-normally closed, 1 switching point
10	=	nominal size 10
F	=	cavity type HF/C1220A
N	=	NBR (nitril-butadien-rubber / BUNA) seals **(standard)**
V	=	FKM (fluorocarbon rubber / VITON) seals (special seals on request)
A ... Q	=	standard model according to valid data sheet
Z ... R	=	special model (on request)
1 ... 9	=	technical design no. (omit by ordering)
…	=	voltage e.g. 24 (24 V)
D	=	current DC
GR	=	DIN EN 175301-803 connection 3-pole 2 P+E, with protection diode, (IP 65) **(standard)**
JR	=	Junior Timer plug connection 2-pole radial, with protection diode, (IP 65)
UR	=	Deutsch plug connection DT04-2P 2-pole radial, with protection diode, (IP 67/69K)
		other plug-variants, please consult BUCHER.
(blank)	=	connection without mating plug **(standard)**
Q	=	only connection “GR“ with mating plug

mating plug not supplied

IMPORTANT!
Not every combination of voltage values and plug connections available.

Related data sheets

Reference	Description
400-P-040011	form tools
400-P-010101	MTTFd Values for Hydraulic Valves
400-P-120112	solenoid coil 36X48-161
400-P-065111	cavity HF/C1220A
400-P-740551	threaded port body GHF-34...

info.ch@bucherhydraulics.com **www.bucherhydraulics.com**

© 2026 by Bucher Hydraulics AG Frutigen, 3714 Frutigen, Switzerland

All rights reserved.
Data is provided for the purpose of product description only, and must not be construed as warranted characteristics in the legal sense. The information does not relieve users from the duty of conducting their own evaluations and tests. Because the products are subject to continual improvement, we reserve the right to amend the product specifications contained in this catalogue.

BUCHER hydraulics
WWW.SUMY.IR

General information
Cavity

Type series: GP/C0830

Dimensions and sectional view

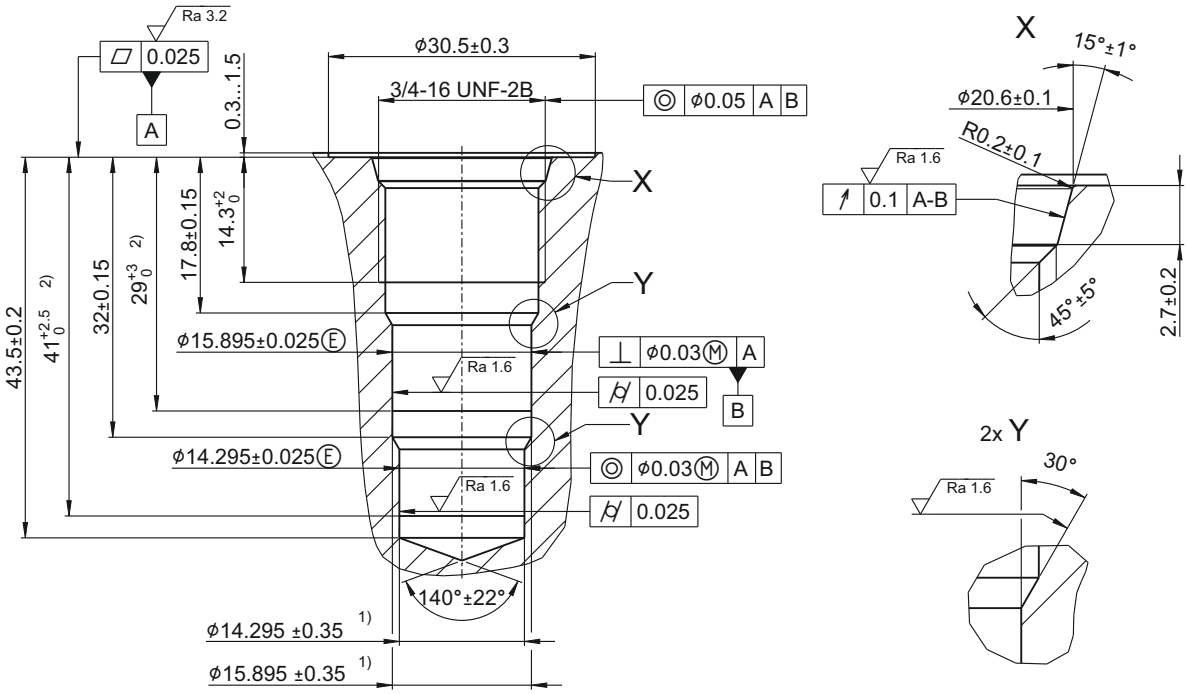

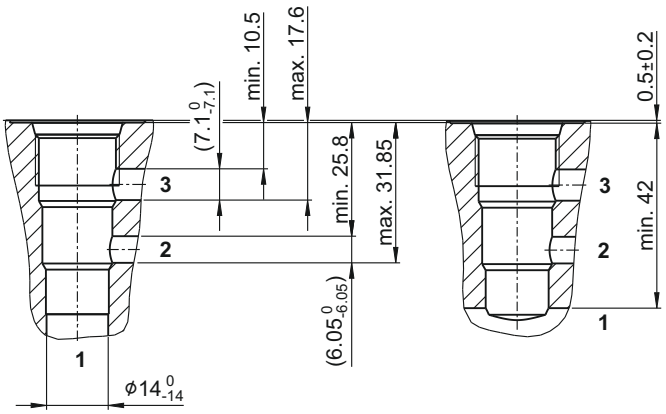

HINWEIS! / NOTE!

[1] Passungstiefe / minimum depth of specified diametral tolerance

[2] Vorbearbeitungs-Ø / pre-drilling diameters

Installation information

ATTENTION!
You must maintain the specified positional and diametral tolerances. To ensure trouble-free operation of the screw-in cartridges, we strongly recommend that pilot drilling, boring, reaming and cavity thread-cutting are always performed in one setup.

NOTE!
Cavity type to factory standard.

NOTE!
We offer form tool sets for sale or hire. See data sheet 400-P-040011 for further information.

info.ch@bucherhydraulics.com **www.bucherhydraulics.com**

© 2025 by Bucher Hydraulics AG Frutigen, 3714 Frutigen, Switzerland

All rights reserved.
Data is provided for the purpose of product description only, and must not be construed as warranted characteristics in the legal sense. The information does not relieve users from the duty of conducting their own evaluations and tests. Because the products are subject to continual improvement, we reserve the right to amend the product specifications contained in this catalogue.

BUCHER hydraulics
WWW.SUMY.IR

Directional valve 3-way/2-position

Q_{max} = 30 l/min, p_{max} = 420 bar
direct acting, spool type, switching position monitored, switching solenoid
Type series: WKDPP32G-S_-5P-...A...

- Screw-in cartridge valve
- For cavity GP/C0830
- All external parts with zinc-nickel plating according to DIN EN ISO 19598
- Installation in threaded port body type GGP-38
- With integral electronic monitoring of operating position
- High pressure wet-armature solenoids
- The slip-on coil can be rotated, and it can be replaced without opening the hydraulic envelope
- Various plug-connector systems and voltages are available

Description

These 3/2 solenoid-operated cartridge valves, series WKDPP32G-S_-5P-...A..., feature monitoring of the operating positions and are size 5 / SAE 8, direct acting, pressure balanced screw-in cartridges with an 3/4-16 UNF mounting thread. They are designed on the proven sliding-spool principle. The safe switch position is always the non-operated valve position. To ensure that electrical line interruptions of any kind do not result in unsafe conditions, the sensor's switch output is always at High in the non-operated state. As an option, the energized position can be controlled additionally. All external parts of the cartridge are zinc-nickel plated and are thus suitable for use in the harshest operating environments. The slip-on coils can be replaced without opening the hydraulic circuit or removing the electronics (sensor), and can be positioned at any angle through 360°. These screw-in valves are mainly used in mobile and stationary applications for the pilot or directional control of consumers such as hydraulic motors and hydraulic cylinders. If you intend to install the valve yourself, please refer to the section "Related data sheets".

Symbol

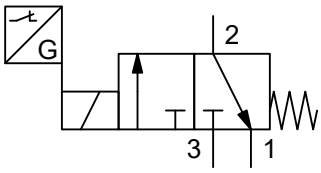

Simplified

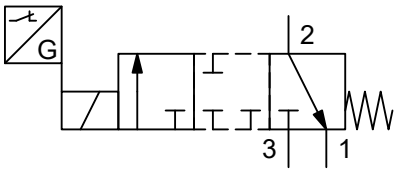

Detailed

Technical data

General characteristics	Description, value, unit
Sales category	minimum order quantity required (see order details)
Function group	Directional valve
Function	3-way/2-position
Design	Screw-in cartridge valve
Controls	switching solenoid
Characteristic	direct acting, spool type, switching position monitored
MTTFd value	150 years
Construction size	NG 5 / SAE 08
Thread size	3/4-16 UNF-2A
Mounting attitude	unrestricted
Weight	0.96 kg
Cavity acc. factory standard	For cavity GP/C0830
Tightening torque steel	60 Nm
Tightening torque aluminium	60 Nm
Tightening torque tolerance	± 10 %
Minimum ambient temperature	- 20 °C
Maximum ambient temperature	+ 50 °C
Surface protection	All external parts with zinc-nickel plating according to DIN EN ISO 19598
Sealing material	see ordering code
Seal kit order number	NBR: DS-247-N / FKM: DS-247-V

Hydraulic characteristics	Description, value, unit
Maximum operating pressure	420 bar
Restriction of the operating pressure	Max. 250 bar at port 1
Maximum flow rate	30 l/min
Flow direction	see symbol
Hydraulic fluid	HL and HLP mineral oil according to DIN 51 524; other fluids on request!
Minimum fluid temperature	- 30 °C
Maximum fluid temperature	+ 80 °C
Viscosity range	10 ... 500 mm^2/s (cSt)
Recommended viscosity range	15 ... 250 mm^2/s (cSt)
Minimum fluid cleanliness (cleanlineless class according to ISO 4406:1999)	class 20/18/15

NOTE!
Slightly increased leakage is possible in dynamic use in the lowest temperature range.

Electric characteristics	Description, value, unit
Actuator type	solenoid coil
Solenoid coils type	36X48/16.1
Supply voltage DC	12/24 V DC
Supply voltage tolerance	± 10 %

WWW.SUMY.IR

Electric characteristics	Description, value, unit
Nominal power consumption	19 W
Switching time	Switching time measured at: UN: Δp = 335 bar; Q = 24 l/min; TAmbient = 20 °C; ϑ = 46 mm2/s 1 to 2: 174 ms (energizing) / 30 ms (de-energizing) 2 nach 3: 80 ms (energizing) / 103 ms (de-energizing)
Relative duty cycle	100 %
Electrical connection coil	several connection types available, see ordering code
Protection class solenoid coil to ISO 20 653 / EN 60 529	several classes of protection available, see ordering code (with appropriate mating connector and proper fitting and sealing)

NOTE!
The switching time can be strongly dependent on flow rate, pressure, oil viscosity and the dwell time under pressure. In practice, the switching time may therefore deviate from the specified value range.

Sensor characteristics	Description, value, unit
Supply voltage (+Vs)	10...30 V DC
Maximum load current	100 mA
Short-circuit protection	Permanently resistant to load short circuit
Protection class sensor to ISO 20653 / EN 60529	IP 67 / IP 69K (with appropriate mating connector and proper fitting and sealing)
Vibration test	EN 60068-2-6 – 55 Hz, amplitude 1 mm, 3 axes, 30 min
Shock test	EN 60068-2-27 – half sine wave, 30 gn 11 ms half sine wave, 3 axes
EMC immunity	EN 61000-6-2
EMC interference emission	EN 61000-6-4
MTTF (40° C) according to EN ISO 13849-1 Annex C.5	320 years
MTTFD according to EN ISO 13849-1 Annex C.5.1	640 years
Electrical connection	device plug M12x1, 4-pin (male), A-coded

BUCHER hydraulics
WWW.SUMY.IR

Performance graphs

measured with oil viscosity 33.0 mm²/s (cSt), coil at steady-state temperature and 10 % undervoltage

p = f (Q) Performance limit

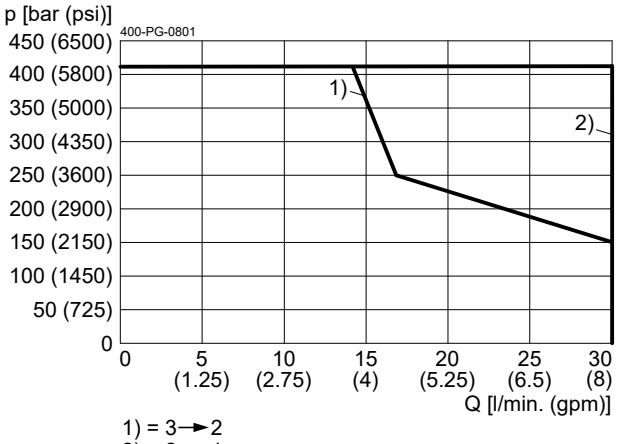

1) = 3→2
2) = 2→1

Δp = f (Q) Pressure drop-flow rate characteristic

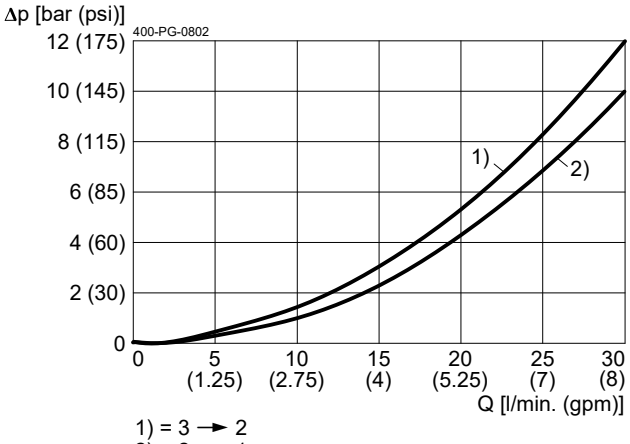

1) 3 → 2
2) 2 → 1

Dimensions and sectional view

Beispiel für die Masseinheit:
Exampel for the dimensional units:

0.79	= 0.79 mm	millimeter
[.031]	= 0.031"	inch

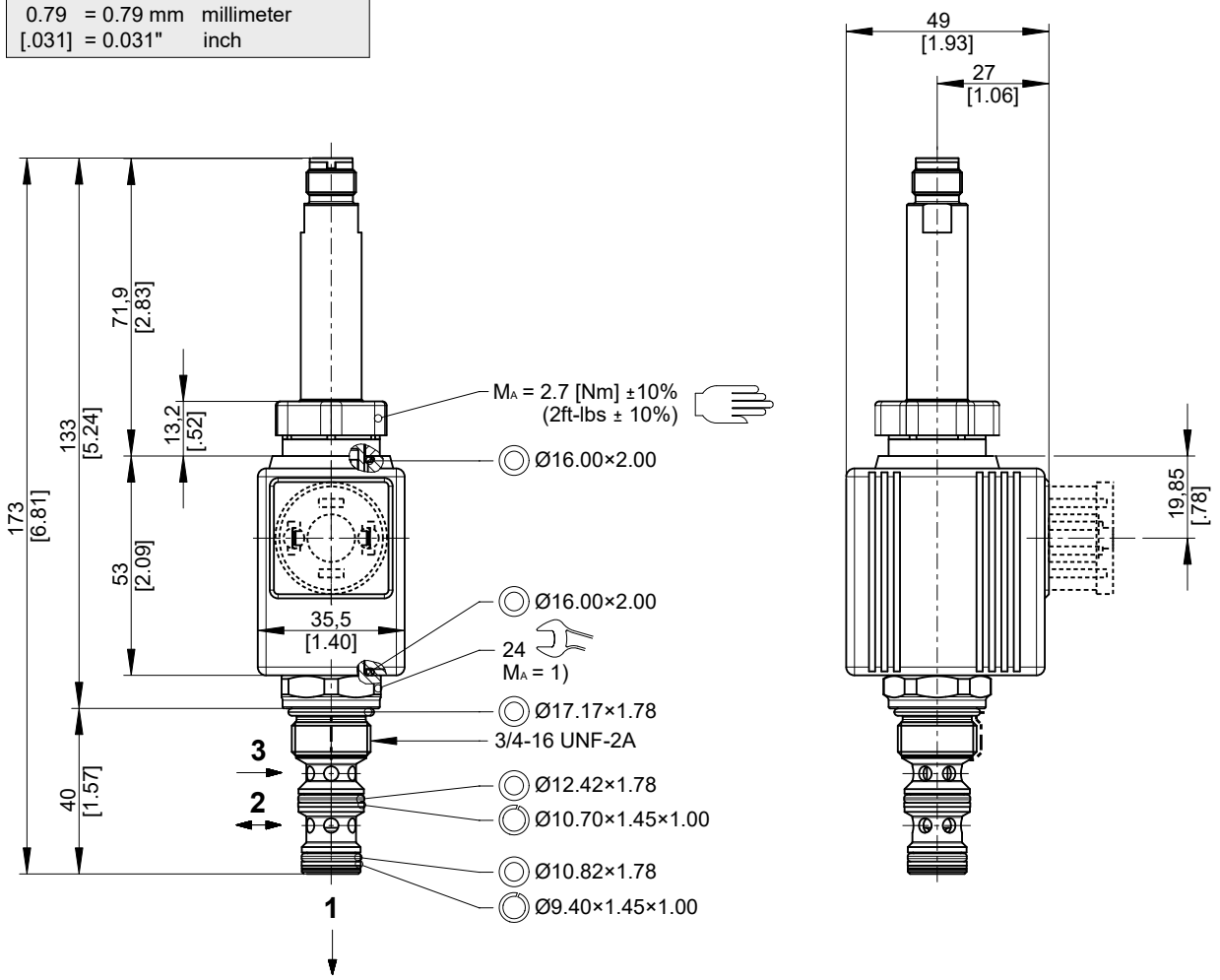

Installation information

NOTE!
1) When fitting the screw-in cartridge valve, use the specified tightening torque. The value can be found in the chapter "Technical data".

ATTENTION!
Using screw-in valves and components that include monitoring of the operating position: do not use the signal from the position switch to directly activate a safety-related control function. In addition, only use solenoid coils that have a protection diode.

ATTENTION!
Only qualified personnel with mechanical skills may carry out any maintenance work. Generally, the only work that should ever be undertaken is to check, and possibly replace, the seals. When changing seals, oil or grease the new seals thoroughly before fitting them.

ATTENTION!
The safe switch position is the non-operated valve position. In accordance with the criteria for proven safety principles, the status of the position signal changes during the overlap stroke (before the valve actually opens).

IMPORTANT!
When connecting the sensor (for monitoring the operating position), note the information regarding pin assignment in this data sheet. The sensor cable must not be subjected to any pulling forces. Note also that opening the screw-in valve or removing the electronics (sensor) is not permitted!

NOTE!
To achieve the screw-in valve's maximum performance rating, fit the solenoid coil as shown (with the plug pins nearest the knurled nut). The valve must be installed in a steel body.

NOTE!
The seals are not available individually. The seal kit order number can be found in the chapter "Technical data".

Connection diagram for sensor

Standard "A", 1 switching point:

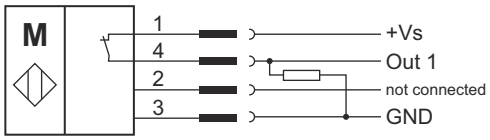

Option "B", 2 switching points:

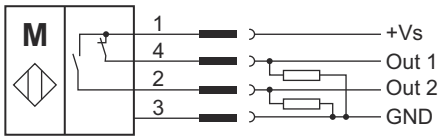

	Version A		Version B	
Valve status	Out 1	Out 2	Out 1	Out 2
Unactivated	high	-	high	low
Actuated	low	-	low	high

Ordering code

BUCHER hydraulics
WWW.SUMY.IR

General information
Cavity

Type series: GQ/C0840

Dimensions and sectional view

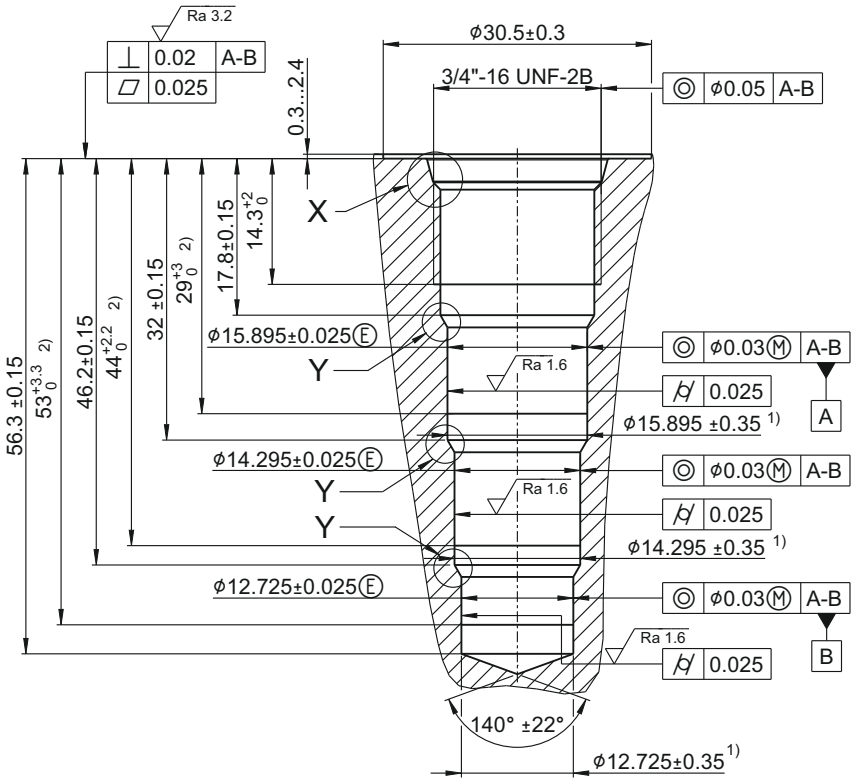

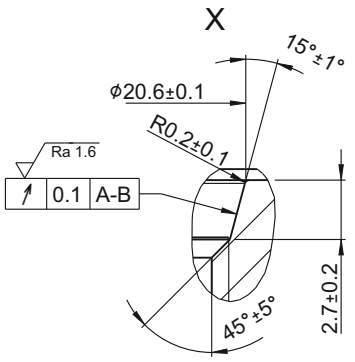

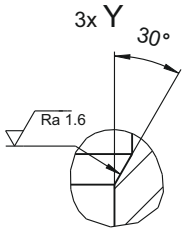

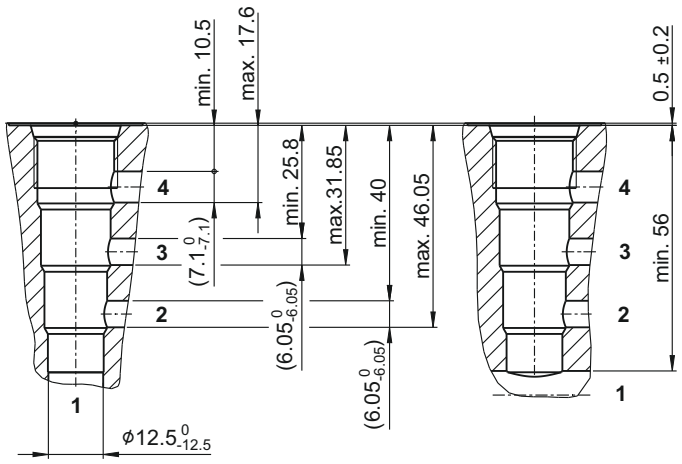

HINWEIS! / NOTE!

1) Passungstiefe / minimum depth of specified diametral tolerance

2) Vorbearbeitungs-Ø / pre-drilling diameters

WWW.SUMY.IR

Installation information

ATTENTION!
You must maintain the specified positional and diametral tolerances. To ensure trouble-free operation of the screw-in cartridges, we strongly recommend that pilot drilling, boring, reaming and cavity thread-cutting are always performed in one setup.

NOTE!
Cavity type to factory standard.

NOTE!
We offer form tool sets for sale or hire. See data sheet 400-P-040011 for further information.

info.ch@bucherhydraulics.com **www.bucherhydraulics.com**

© 2025 by Bucher Hydraulics AG Frutigen, 3714 Frutigen, Switzerland

All rights reserved.
Data is provided for the purpose of product description only, and must not be construed as warranted characteristics in the legal sense. The information does not relieve users from the duty of conducting their own evaluations and tests. Because the products are subject to continual improvement, we reserve the right to amend the product specifications contained in this catalogue.

WWW.SUMY.IR

Directional valve 4-way/2-position

Q_{max} = 30 l/min, p_{max} = 250 bar
direct acting, spool type, switching position monitored, switching solenoid
Type series: WKDP42A-S_-5Q-...A...

- Screw-in cartridge valve
- For cavity GQ/C0840
- All external parts with zinc-nickel plating according to DIN EN ISO 19598
- Installation in threaded port body type GGQ-38
- With integral electronic monitoring of operating position
- High pressure wet-armature solenoids
- The slip-on coil can be rotated, and it can be replaced without opening the hydraulic envelope
- Various plug-connector systems and voltages are available

Description

These 4/2 solenoid-operated cartridge valves, series WKDP42A-S_-5Q-...A..., feature monitoring of the operating positions and are size 5 / SAE 8, direct acting, pressure balanced screw-in cartridges with an 3/4-16 UNF mounting thread. They are designed on the proven sliding-spool principle. To ensure that electrical line interruptions of any kind do not result in unsafe conditions, the sensor's switch output is always at High in the non-operated state. The safe switch position is considered to have been reached when the spool is in the overlap state. As an option, the energized position can be controlled additionally.

All external parts of the cartridge are zinc-nickel plated and are thus suitable for use in the harshest operating environments. The slip-on coils can be replaced without opening the hydraulic circuit or removing the electronics (sensor) and can be positioned at any angle through 360°. These screw-in valves are mainly used in mobile and stationary applications for the pilot or directional control of consumers such as hydraulic motors and hydraulic cylinders. If you intend to install the valve yourself, please refer to the section "Related data sheets".

Symbol

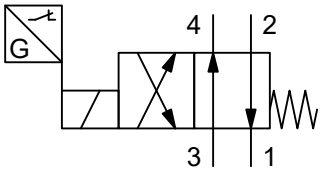

Simplified

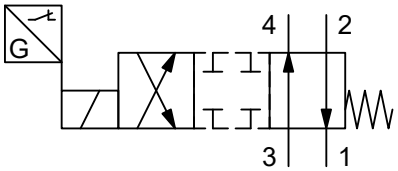

Detailed

Technical data

General characteristics	Description, value, unit
Function group	Directional valve
Function	4-way/2-position
Design	Screw-in cartridge valve
Controls	switching solenoid
Characteristic	direct acting, spool type, switching position monitored
MTTFd value	150 years
Construction size	NG 5 / SAE 08
Thread size	3/4-16 UNF-2A
Mounting attitude	unrestricted
Weight	0.97 kg
Cavity acc. factory standard	For cavity GQ/C0840
Tightening torque steel	40 Nm
Tightening torque aluminium	40 Nm
Tightening torque tolerance	± 10 %
Minimum ambient temperature	- 30 °C
Maximum ambient temperature	+ 50 °C
Surface protection	All external parts with zinc-nickel plating according to DIN EN ISO 19598
Sealing material	see ordering code
Seal kit order number	NBR: DS-248-N / FKM: DS-248-V

Hydraulic characteristics	Description, value, unit
Maximum operating pressure	250 bar
Maximum flow rate	30 l/min
Flow direction	see symbol
Hydraulic fluid	HL and HLP mineral oil according to DIN 51 524; other fluids on request!
Minimum fluid temperature	- 30 °C
Maximum fluid temperature	+ 80 °C
Viscosity range	10 ... 500 mm^2/s (cSt)
Recommended viscosity range	15 ... 250 mm^2/s (cSt)
Minimum fluid cleanliness (cleanlineless class according to ISO 4406:1999)	class 20/18/15

NOTE!
Slightly increased leakage is possible in dynamic use in the lowest temperature range.

Electric characteristics	Description, value, unit
Actuator type	solenoid coil
Solenoid coils type	36X48/16.1
Supply voltage DC	12/24 V DC
Supply voltage tolerance	± 10 %
Nominal power consumption	19 W

WWW.SUMY.IR

Electric characteristics	Description, value, unit
Switching time	Switching time measured at: UN: Δp = 200 bar; Q = 24 l/min; TAmbient = 20 °C; ϑ = 46 mm2/s 1 to 2; 3 to 4: 33 ms (energizing) / 75 ms (de-energizing) 1 to 3; 2 to 4: 60 ms (energizing) / 91 ms (de-energizing)
Relative duty cycle	100 %
Electrical connection coil	several connection types available, see ordering code
Protection class solenoid coil to ISO 20 653 / EN 60 529	several classes of protection available, see ordering code (with appropriate mating connector and proper fitting and sealing)

NOTE!
The switching time can be strongly dependent on flow rate, pressure, oil viscosity and the dwell time under pressure. In practice, the switching time may therefore deviate from the specified value range.

Sensor characteristics	Description, value, unit
Supply voltage (+Vs)	10...30 V DC
Maximum load current	100 mA
Short-circuit protection	Permanently resistant to load short circuit
Protection class sensor to ISO 20653 / EN 60529	IP 67 / IP 69K (with appropriate mating connector and proper fitting and sealing)
Vibration test	EN 60068-2-6 – 55 Hz, amplitude 1 mm, 3 axes, 30 min
Shock test	EN 60068-2-27 – half sine wave, 30 gn 11 ms half sine wave, 3 axes
EMC immunity	EN 61000-6-2
EMC interference emission	EN 61000-6-4
MTTF (40° C) according to EN ISO 13849-1 Annex C.5	320 years
MTTFD according to EN ISO 13849-1 Annex C.5.1	640 years
Electrical connection	device plug M12x1, 4-pin (male), A-coded

WWW.SUMY.IR

Performance graphs

measured with oil viscosity 33.0 mm²/s (cSt), coil at steady-state temperature and 10 % undervoltage

p = f (Q) Performance limit

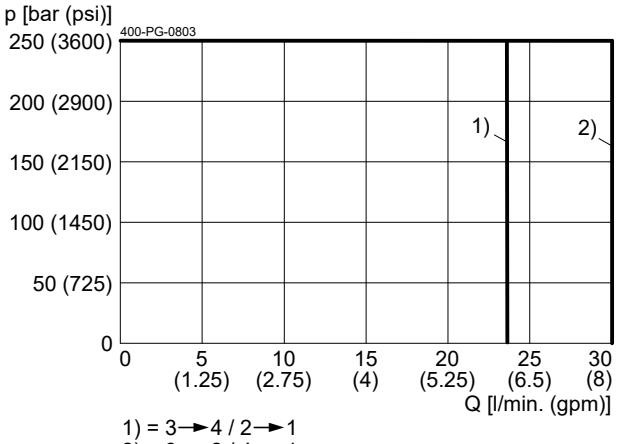

1) = 3→4 / 2→1
2) = 3→2 / 4→1

Δp = f (Q) Pressure drop-flow rate characteristic

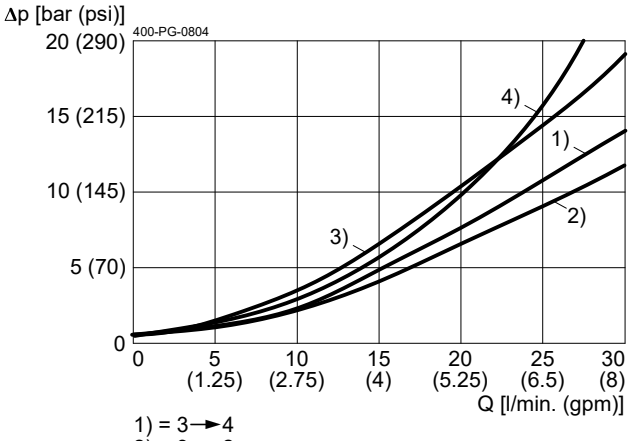

1) = 3→4
2) = 3→2
3) = 2→1
4) = 4→1

Dimensions and sectional view

Beispiel für die Masseinheit:
Exampel for the dimensional units:

0.79	= 0.79 mm	millimeter
[.031]	= 0.031"	inch

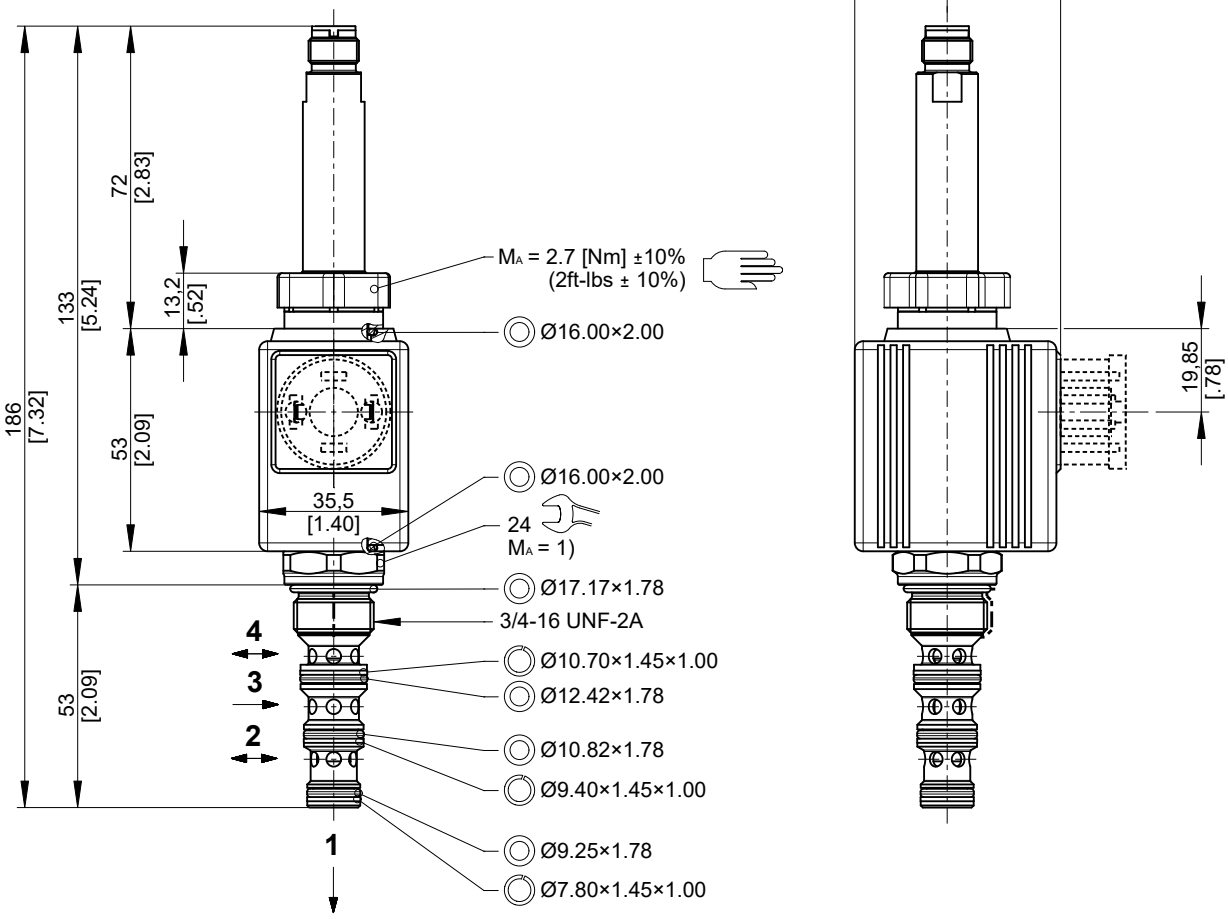

Installation information

NOTE!
1) When fitting the screw-in cartridge valve, use the specified tightening torque. The value can be found in the chapter "Technical data".

ATTENTION!
Using screw-in valves and components that include monitoring of the operating position: do not use the signal from the position switch to directly activate a safety-related control function. In addition, only use solenoid coils that have a protection diode.

ATTENTION!
Only qualified personnel with mechanical skills may carry out any maintenance work. Generally, the only work that should ever be undertaken is to check, and possibly replace, the seals. When changing seals, oil or grease the new seals thoroughly before fitting them.

ATTENTION!
The safe switch position is the non-operated valve position. In accordance with the criteria for proven safety principles, the status of the position signal changes during the overlap stroke (before the valve actually opens).

WWW.SUMY.IR

IMPORTANT!
When connecting the sensor (for monitoring the operating position), note the information regarding pin assignment in this data sheet. The sensor cable must not be subjected to any pulling forces. Note also that opening the screw-in valve or removing the electronics (sensor) is not permitted!

NOTE!
To achieve the screw-in valve's maximum performance rating, fit the solenoid coil as shown (with the plug pins nearest the knurled nut). The valve must be installed in a steel body.

NOTE!
The seals are not available individually. The seal kit order number can be found in the chapter "Technical data".

Connection diagram for sensor

Standard "A", 1 switching point:

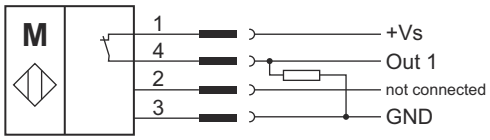

Option "B", 2 switching points:

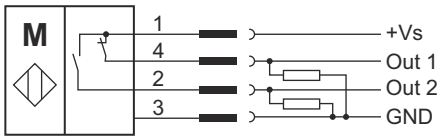

	Version A		Version B	
Valve status	Out 1	Out 2	Out 1	Out 2
Unactivated	high	-	high	low
Actuated	low	-	low	high

Ordering code

BUCHER hydraulics
WWW.SUMY.IR

General information
Cavity

Type series: AC

Dimensions and sectional view

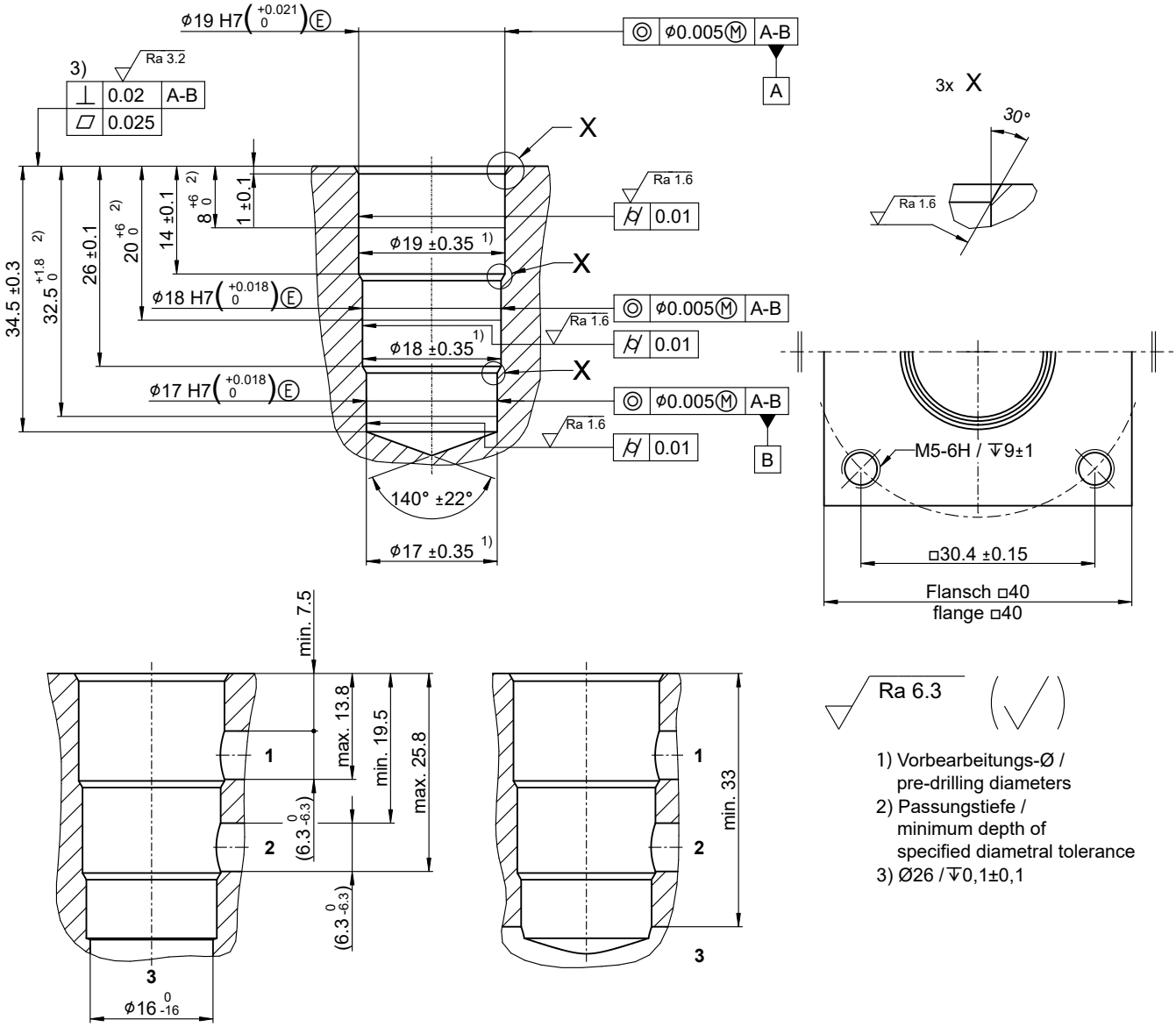

Installation information

ATTENTION!
You must maintain the specified positional and diametral tolerances. To ensure trouble-free operation of the screw-in cartridges, we strongly recommend that pilot drilling, boring, reaming and cavity thread-cutting are always performed in one setup.

NOTE!
We offer form tool sets for sale or hire. For further information, see data sheet 400-P-040011.

NOTE!
Cavity type to factory standard.

info.ch@bucherhydraulics.com www.bucherhydraulics.com

© 2024 by Bucher Hydraulics AG Frutigen, 3714 Frutigen, Switzerland

All rights reserved.
Data is provided for the purpose of product description only, and must not be construed as warranted characteristics in the legal sense. The information does not relieve users from the duty of conducting their own evaluations and tests. Because the products are subject to continual improvement, we reserve the right to amend the product specifications contained in this catalogue.

BUCHER hydraulics

WWW.SUMY.IR

Directional valve 3-way/2-position

Q_{max} = 40 l/min, p_{max} = 315 bar
switching solenoid, direct acting, poppet type
Type series: W1D_B... (installation shallow)

- Slip-in cartridge valve
- For cavity AC
- All external parts with zinc-nickel plating according to DIN EN ISO 19598
- Guided valve spool and poppet
- With or without manual override
- As an option, hand lever can be fitted to solenoid
- De-energized closed
- The slip-on coil can be rotated, and it can be replaced without opening the hydraulic envelope
- High pressure wet-armature solenoids
- Various plug-connector systems and voltages are available

Description

The 3-way/2-position solenoid-operated directional seat valves, series W1D_B... (installation shallow), are size 6, direct acting, and pressure balanced screw-in valves. They are designed on the tried and tested principle of the guided poppet, and the guide spool has a seal. This valve type has an underlapped spool. In the crossover position, all connections are thus connected, i.e., there is a connection between ports 1, 2 and 3 during the valve's switching period. This type is the "shallow" installation version, which fits into the cavity type according to the AC factory standard. For the "deep" installation version, see separate data sheet. These cartridge seat valves are also available with or without manual override, and with the option of an additional hand lever. All external parts of the cartridge are zinc-nickel plated, and are thus suitable for use in the harshest operating environments. The slip-on coils can be replaced without opening the hydraulic envelope and can be positioned at any angle through 360°. These valves are predominantly used in certain mobile and industrial applications where leak-tight shut-off functions are crucially important. Examples are where loads, tensions, or clamping forces must be held without leakage. For self-assembly, please refer to the section related data sheets.

Symbol

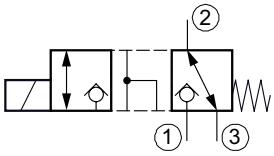

Without manual override (standard)

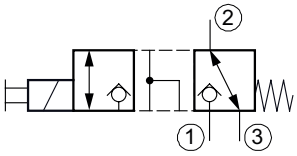

With manual override

Technical data

General characteristics	Description, value, unit
Function group	Directional valve
Function	3-way/2-position
Design	Slip-in cartridge valve
Controls	switching solenoid
Characteristic	direct acting, poppet type
Transition/central position of spool/piston	zero or underlap/negative (open)
MTTFd value	150 years
Construction size	NG 6
Mounting attitude	unrestricted
Weight	0.85 kg
Cavity acc. factory standard	For cavity AC
Tightening torque steel	5.2 Nm
Tightening torque aluminium	5.2 Nm
Tightening torque tolerance	± 5 %
Minimum ambient temperature	- 25 °C
Maximum ambient temperature	+ 50 °C
Surface protection	All external parts with zinc-nickel plating according to DIN EN ISO 19598
Sealing material	see ordering code
Seal kit order number	NBR: DS-095-N / FKM: DS-095-V

IMPORTANT!
The less favorable values from the general, hydraulic and electrical characteristics determine the temperature range of the whole valve.

Hydraulic characteristics	Description, value, unit
Maximum operating pressure	315 bar
Maximum flow rate	40 l/min
Flow direction	see symbol
Hydraulic fluid	HL and HLP mineral oil according to DIN 51 524; other fluids on request!
Minimum fluid temperature	- 25 °C
Maximum fluid temperature	+ 80 °C
Viscosity range	10 ... 500 mm^2/s (cSt)
Recommended viscosity range	15 ... 250 mm^2/s (cSt)
Minimum fluid cleanliness (cleanlineless class according to ISO 4406:1999)	class 20/18/15

Electric characteristics	Description, value, unit
Actuator type	solenoid coil
Solenoid coils type	D45/207
Supply voltage DC	12/24 V DC
Supply voltage AC	115/230 (50 ... 60 Hz) V AC
Supply voltage tolerance	± 10 %
Maximum permissible power consumption	V DC = 30 ... 32 W / V AC = 31 ... 32 W
Switching time	Flow direction 1 to 2: 30 ... 180 ms (energizing), 10 ... 80 ms (de-energizing) / Flow direction 3 to 2: 25 ... 120 ms (energizing), 10 ... 90 ms (de-energizing)
Relative duty cycle	100 %
Electrical connection coil	several connection types available, see ordering code
Protection class solenoid coil to ISO 20 653 / EN 60 529	several classes of protection available, see ordering code (with appropriate mating connector and proper fitting and sealing)

IMPORTANT!
To ensure the performance data is not compromised, it is imperative to use coils D45/207 according to data sheet 400-P-120120.

NOTE!
These times are strongly influenced by fluid pressure, flow rate and viscosity, as well as by the dwell time under pressure.

Performance graphs

measured with oil viscosity 33.0 mm²/s (cSt), coil at steady-state temperature and 10 % undervoltage

p = f (Q) Performance limit

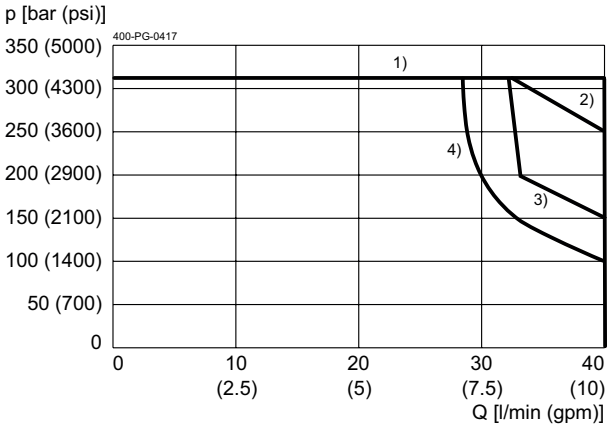

1) = 2 → 3
2) = 2 → 1
3) = 3 → 2
4) = 1 → 2

Δp = f (Q) Pressure drop-flow rate characteristic

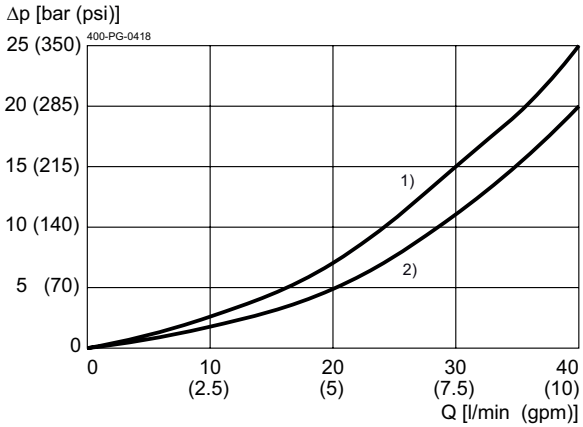

1) = 1 → 2; 2 → 1
2) = 2 → 3; 3 → 2

Dimensions and sectional view

Beispiel für die Masseinheit:
Example for the dimensional units:
0.79 = 0.79 mm millimeter
(.031) = 0.031" inch

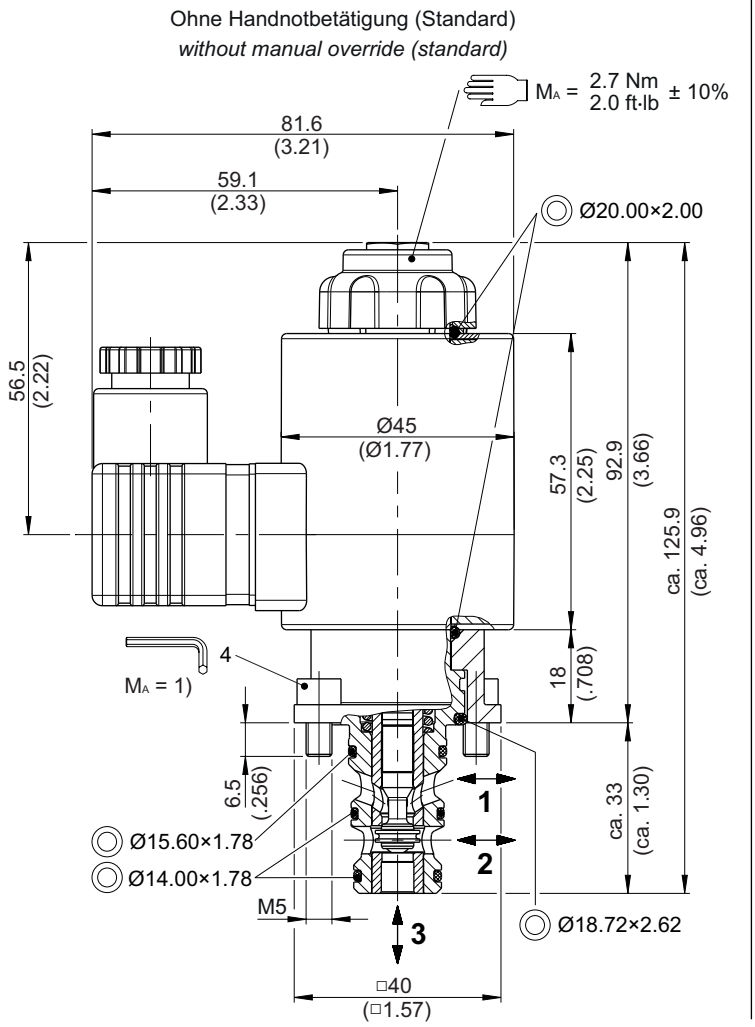

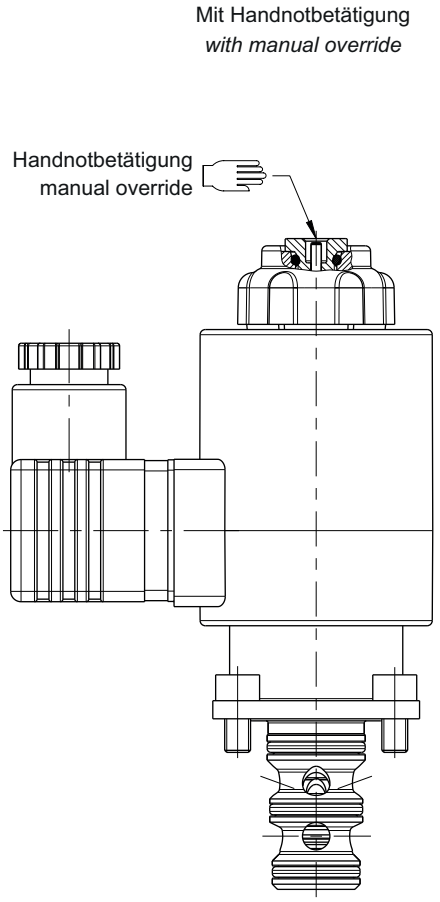

Abmessungen siehe Abbildung links
Dimensions see drawing on the left

Installation information

ATTENTION!
Only qualified personnel with mechanical skills may carry out any maintenance work. Generally, the only work that should ever be undertaken is to check, and possibly replace, the seals. When changing seals, oil or grease the new seals thoroughly before fitting them.

NOTE!
1) When fitting the slip-in valves, use the specified tightening torque for the mounting screws. The value can be found in the chapter "Technical data".

IMPORTANT!
When replacing an old coil with connection according to DIN 43650/ISO4400 (with other Pin setup than according to datasheet 400-P-120120), the new coil can be mounted in 180° reversed position so that the existing plug (with 180° earthingPIN) can be connected. This does not affect the performance data.

Hand lever fitted on solenoid (optional)

Beispiel für die Masseinheit:
Example for the dimensional units:
0.79 = 0.79 mm millimeter
(.031) = 0.031" inch

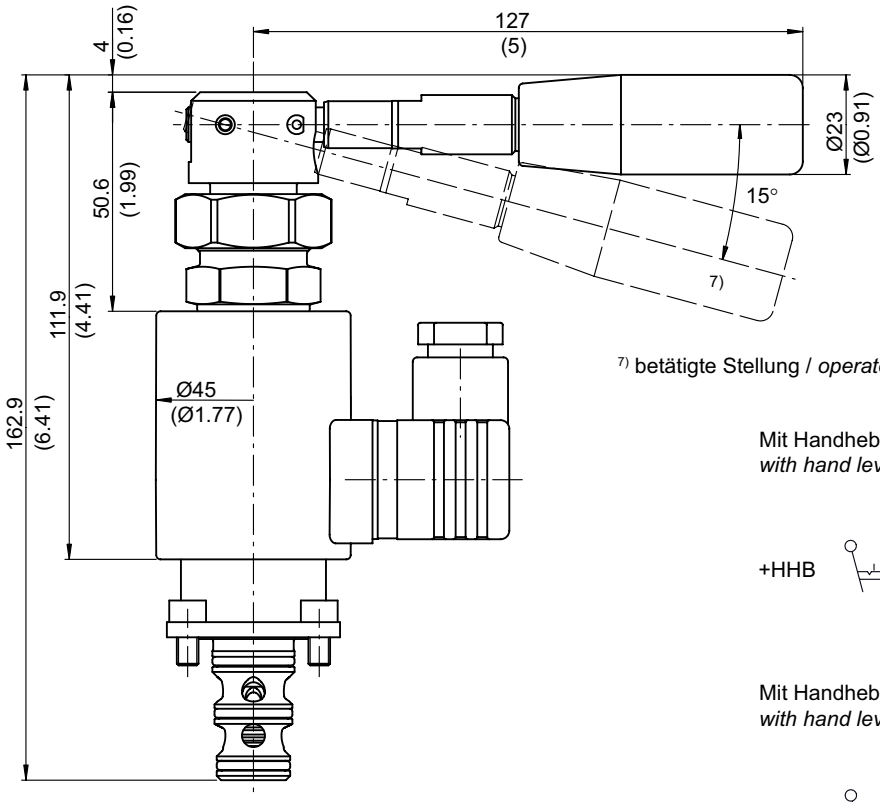

7) betätigte Stellung / *operated position*

Mit Handhebel, rastbar
with hand lever, detentable

+HHB

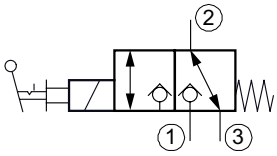

Mit Handhebel, nicht rastbar
with hand lever, not detentable

+HHNB

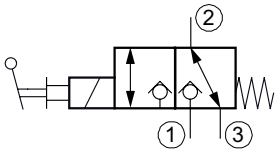

As an option, these valves are available with an additional hand lever. The hand lever can be fitted on the solenoid. Two models can be supplied:"HHB" hand lever with detent feature, and the "HHNB" hand lever without detent feature.

IMPORTANT!
Hand levers can only be fitted to valves that have a manual override.

Ordering code

Ex. W1 D D B 3 24 D _ +HHB - 2

W1 = directional valve, poppet-type, direct acting
D = 3-way/2-position, standard spool
D = without manual override, with NBR (BUNA) seals **(standard)**
I = without manual override, with FKM (VITON) seals
B = with manual override, with NBR (BUNA) seals
G = with manual override, with FKM (VITON) seals
A…Q = standard model according to valid data sheet **(standard)**
Z…R = special model after consultation
1…9 = technical design no. directional valve (omit when ordering)
… = voltage e.g. 24 (24 V)
D = current DC
A = current AC (connection only possible with DIN EN 175301-803)
(blank) = DIN EN 175301-803 connection, 3-pole 2 P+E with mating plug, IP 65 **(standard)**
M100 = DIN EN 175301-803 connection, 3-pole 2 P+E
DT = Deutsch plug connection DT04-2P (with protection diode, IP 67/69K)
JT = Junior Timer radial plug connection (with protection diode, IP 65)
F = flying leads (600 mm)
} mating plug not supplied
(blank) = without hand lever **(standard)**
+HHB = with hand lever, detentable
+HHNB = with hand lever, not detentable
1…9 = technical design no. hand lever (omit when ordering)

Related data sheets

Reference	Description
400-P-040011	Form tools
400-P-120120	Solenoid coil D45/207
400-P-040111	Cavity AC
400-P-730121	Threaded port body GADA
400-P-010101	MTTFD Values for Hydraulic Valves

info.ch@bucherhydraulics.com **www.bucherhydraulics.com**

© 2023 by Bucher Hydraulics AG Frutigen, 3714 Frutigen, Switzerland

All rights reserved.
Data is provided for the purpose of product description only, and must not be construed as warranted characteristics in the legal sense. The information does not relieve users from the duty of conducting their own evaluations and tests. Because the products are subject to continual improvement, we reserve the right to amend the product specifications contained in this catalogue.

BUCHER hydraulics

WWW.SUMY.IR

General information
Cavity

Type series: AD

Dimensions and sectional view

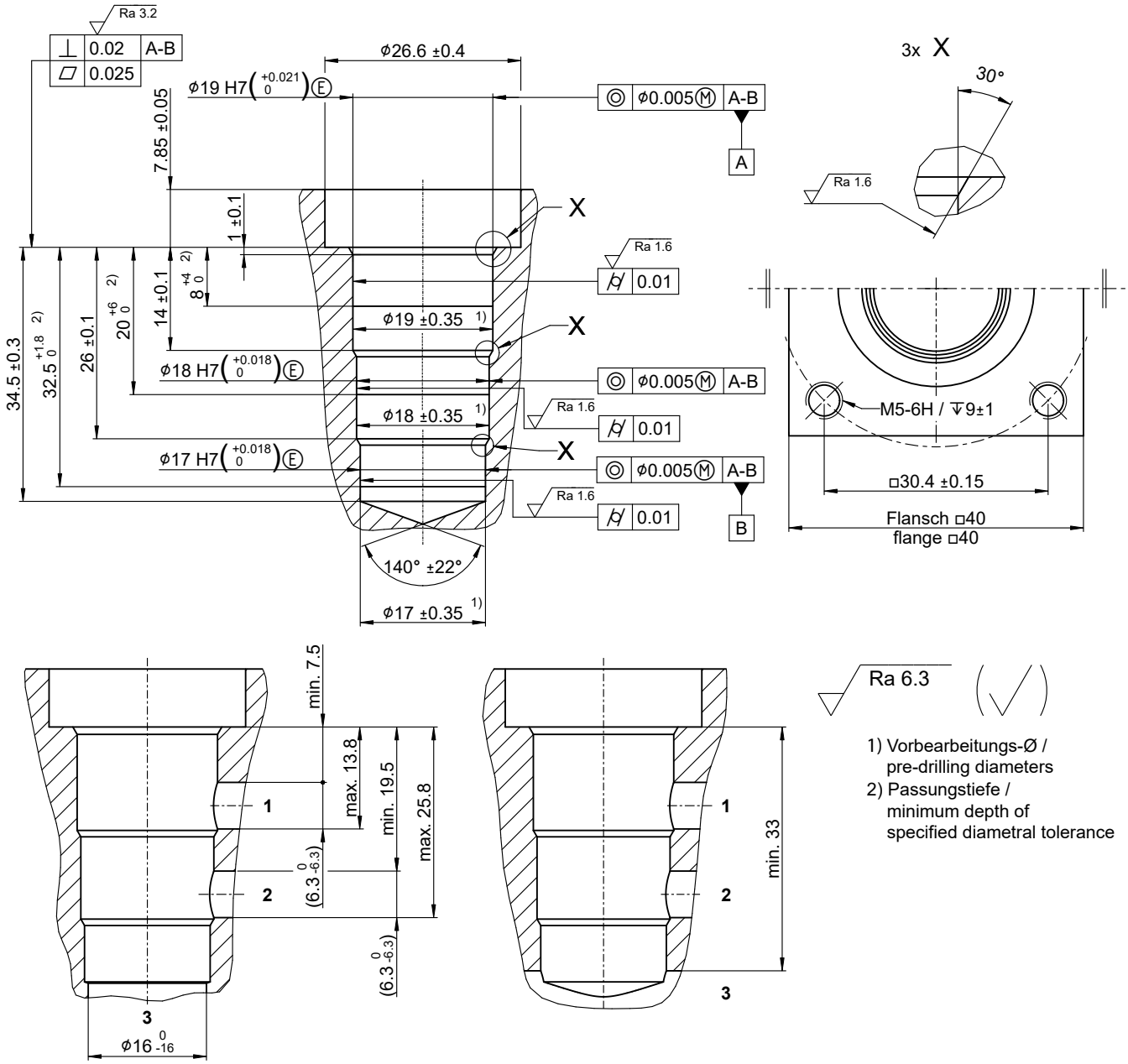

1) Vorbearbeitungs-Ø / pre-drilling diameters
2) Passungstiefe / minimum depth of specified diametral tolerance

Installation information

ATTENTION!
You must maintain the specified positional and diametral tolerances. To ensure trouble-free operation of the screw-in cartridges, we strongly recommend that pilot drilling, boring, reaming and cavity thread-cutting are always performed in one setup.

NOTE!
We offer form tool sets for sale or hire. For further information, see data sheet 400-P-040011.

NOTE!
Cavity type to factory standard.

info.ch@bucherhydraulics.com www.bucherhydraulics.com

© 2024 by Bucher Hydraulics AG Frutigen, 3714 Frutigen, Switzerland

All rights reserved.
Data is provided for the purpose of product description only, and must not be construed as warranted characteristics in the legal sense. The information does not relieve users from the duty of conducting their own evaluations and tests. Because the products are subject to continual improvement, we reserve the right to amend the product specifications contained in this catalogue.

BUCHER hydraulics

WWW.SUMY.IR

Directional valve 3-way/2-position

Q_{max} = 40 l/min, p_{max} = 315 bar
switching solenoid, direct acting, poppet type
Type series: W1D_B... (installation deep)

- Slip-in cartridge valve
- For cavity AD
- All external parts with zinc-nickel plating according to DIN EN ISO 19598
- Guided valve spool and poppet
- With or without manual override
- As an option, hand lever can be fitted to solenoid
- De-energized closed
- The slip-on coil can be rotated, and it can be replaced without opening the hydraulic envelope
- High pressure wet-armature solenoids
- Various plug-connector systems and voltages are available

Description

The 3-way/2-position solenoid-operated directional seat valves, series W1D_B (installation deep), are size 6, direct acting, and pressure balanced screw-in valves. They are designed on the tried and tested principle of the guided poppet, and the guide spool has a seal. This valve type has an underlapped spool. In the crossover position, all connections are thus connected, i.e., there is a connection between ports 1, 2, and 3 during the valve's switching period. This type is the "deep" installation version, which fits into the cavity type according to the AD factory standard. For the "shallow" installation version, see separate data sheet. These cartridge seat valves are also available with or without manual override, and with the option of an additional hand lever. All external parts of the cartridge are zinc-nickel plated, and are thus suitable for use in the harshest operating environments. The slip-on coils can be replaced without opening the hydraulic envelope and can be positioned at any angle through 360°. These valves are predominantly used in certain mobile and industrial applications where leak-tight shut-off functions are crucially important. Examples are where loads, tensions, or clamping forces must be held without leakage. For self-assembly, please refer to the section related data sheets.

Symbol

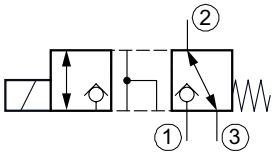

Without manual override (standard)

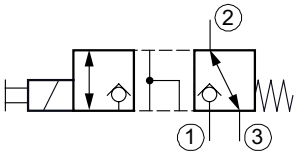

With manual override

Technical data

General characteristics	Description, value, unit
Function group	Directional valve
Function	3-way/2-position
Design	Slip-in cartridge valve
Controls	switching solenoid
Characteristic	direct acting, poppet type
Transition/central position of spool/piston	zero or underlap/negative (open)
MTTFd value	150 years
Construction size	NG 6
Mounting attitude	unrestricted
Weight	0.85 kg
Cavity acc. factory standard	For cavity AD
Tightening torque steel	5.2 Nm
Tightening torque aluminium	5.2 Nm
Tightening torque tolerance	± 5 %
Minimum ambient temperature	- 25 °C
Maximum ambient temperature	+ 50 °C
Surface protection	All external parts with zinc-nickel plating according to DIN EN ISO 19598
Sealing material	see ordering code
Seal kit order number	NBR: DS-095-N / FKM: DS-095-V

IMPORTANT!
The less favorable values from the general, hydraulic and electrical characteristics determine the temperature range of the whole valve.

Hydraulic characteristics	Description, value, unit
Maximum operating pressure	315 bar
Maximum flow rate	40 l/min
Flow direction	see symbol
Hydraulic fluid	HL and HLP mineral oil according to DIN 51 524; other fluids on request!
Minimum fluid temperature	- 25 °C
Maximum fluid temperature	+ 80 °C
Viscosity range	10 ... 500 mm^2/s (cSt)
Recommended viscosity range	15 ... 250 mm^2/s (cSt)
Minimum fluid cleanliness (cleanlineless class according to ISO 4406:1999)	class 20/18/15

Electric characteristics	Description, value, unit
Actuator type	solenoid coil
Solenoid coils type	D45/207
Supply voltage DC	12/24 V DC
Supply voltage AC	115/230 (50 ... 60 Hz) V AC
Supply voltage tolerance	± 10 %
Maximum permissible power consumption	V DC = 30 ... 32 W / V AC = 31 ... 32 W
Switching time	Flow direction 1 to 2: 30 ... 180 ms (energizing), 10 ... 80 ms (de-energizing) / Flow direction 3 to 2: 25 ... 120 ms (energizing), 10 ... 90 ms (de-energizing)
Relative duty cycle	100 %
Electrical connection coil	several connection types available, see ordering code
Protection class solenoid coil to ISO 20 653 / EN 60 529	several classes of protection available, see ordering code (with appropriate mating connector and proper fitting and sealing)

IMPORTANT!
To ensure the performance data is not compromised, it is imperative to use coils D45/207 according to data sheet 400-P-120120.

NOTE!
These times are strongly influenced by fluid pressure, flow rate and viscosity, as well as by the dwell time under pressure.

Performance graphs

measured with oil viscosity 33.0 mm²/s (cSt), coil at steady-state temperature and 10 % undervoltage

p = f (Q) Performance limit

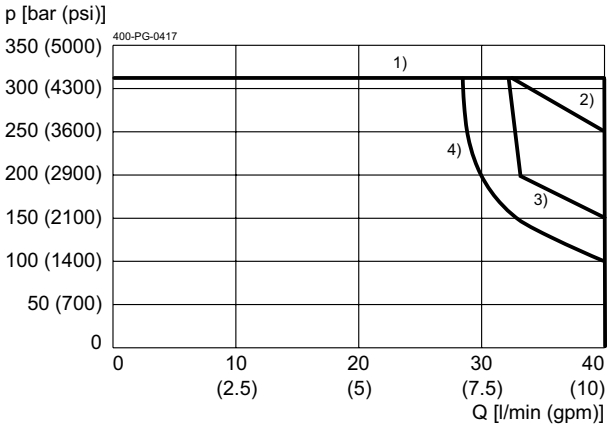

1) = 2 → 3
2) = 2 → 1
3) = 3 → 2
4) = 1 → 2

Δp = f (Q) Pressure drop-flow rate characteristic

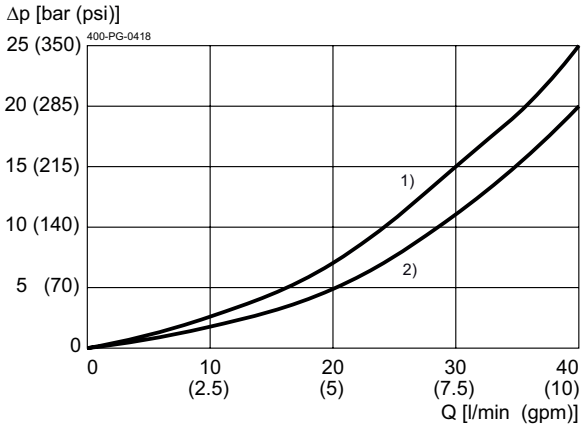

1) = 1 → 2; 2 → 1
2) = 2 → 3; 3 → 2

Dimensions and sectional view

Beispiel für die Masseinheit:
Example for the dimensional units:
0.79 = 0.79 mm millimeter
(.031) = 0.031" inch

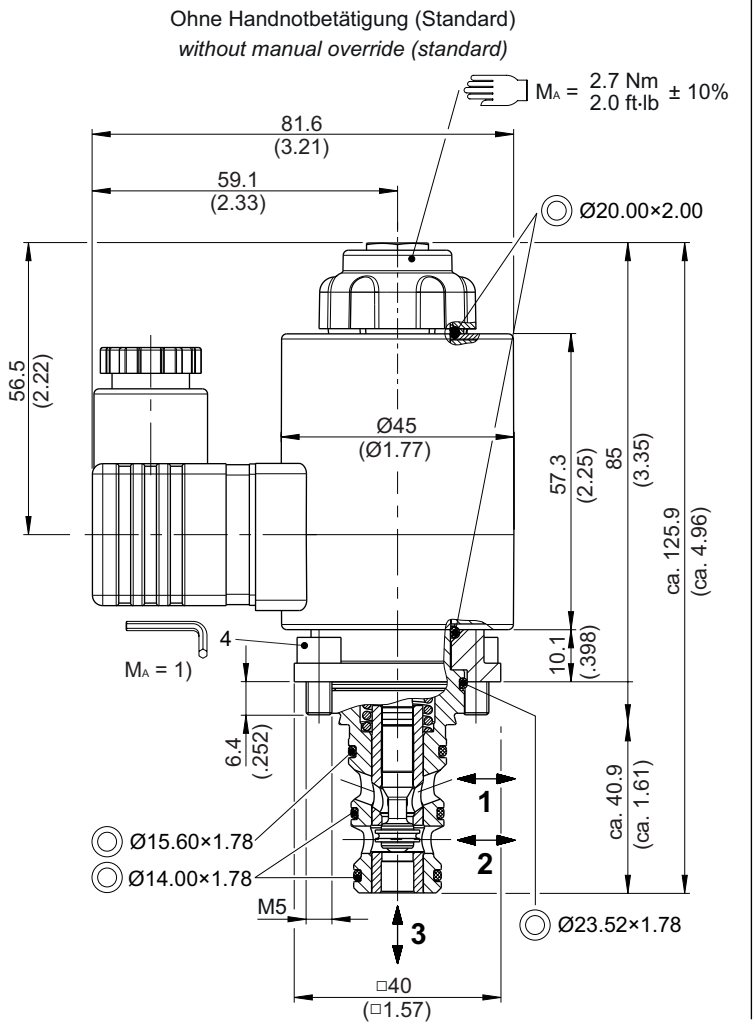

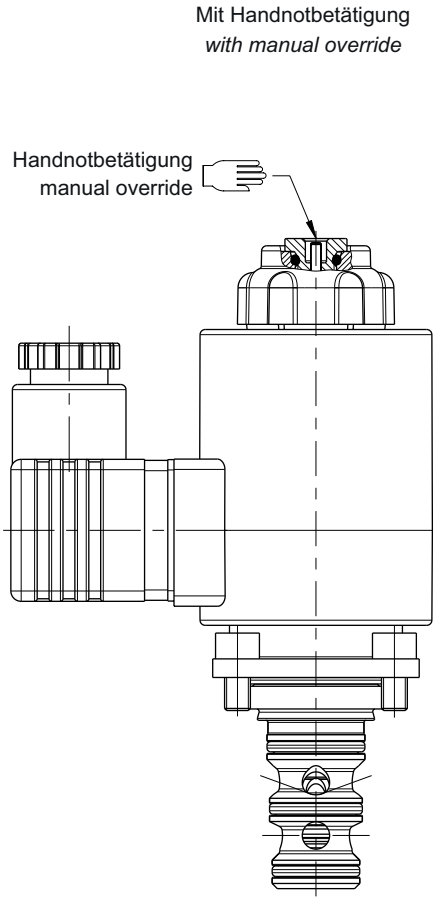

Abmessungen siehe Abbildung links
Dimensions see drawing on the left

Installation information

ATTENTION!
Only qualified personnel with mechanical skills may carry out any maintenance work. Generally, the only work that should ever be undertaken is to check, and possibly replace, the seals. When changing seals, oil or grease the new seals thoroughly before fitting them.

NOTE!
1) When fitting the slip-in valves, use the specified tightening torque for the mounting screws. The value can be found in the chapter "Technical data".

IMPORTANT!
When replacing an old coil with connection according to DIN 43650/ISO4400 (with other Pin setup than according to datasheet 400-P-120120), the new coil can be mounted in 180° reversed position so that the existing plug (with 180° earthingPIN) can be connected. This does not affect the performance data.

Hand lever fitted on solenoid (optional)

Beispiel für die Masseinheit:
Example for the dimensional units:
0.79 = 0.79 mm millimeter
(.031) = 0.031" inch

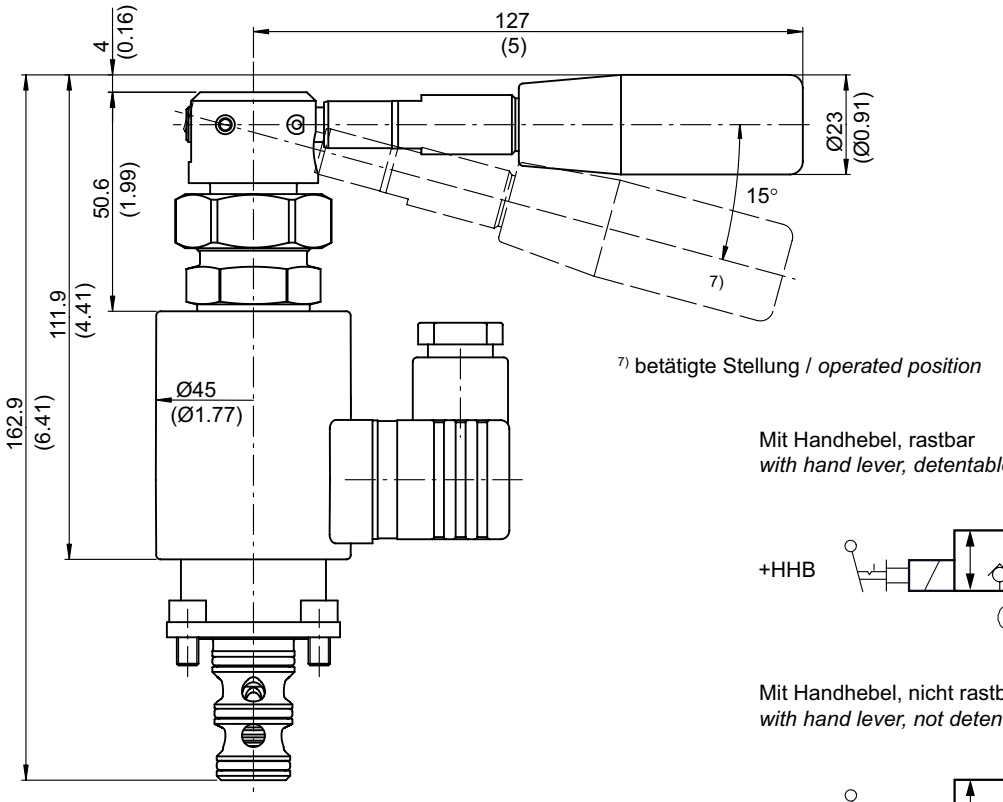

7) betätigte Stellung / *operated position*

Mit Handhebel, rastbar
with hand lever, detentable

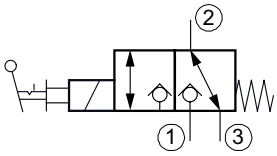

Mit Handhebel, nicht rastbar
with hand lever, not detentable

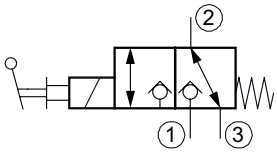

As an option, these valves are available with an additional hand lever. The hand lever can be fitted on the solenoid. Two models can be supplied:"HHB" hand lever with detent feature, and the "HHNB" hand lever without detent feature.

IMPORTANT!
Hand levers can only be fitted to valves that have a manual override.

Ordering code

Ex. W1 D E B 3 24 D _ +HHB - 2

W1 = directional valve, poppet type, direct acting
D = 3-way/2-position, negative spool
E = without manual override, with NBR (BUNA) seals **(standard)**
K = without manual override, with FKM (VITON) seals
C = with manual override, with NBR (BUNA) seals
H = with manual override, with FKM (VITON) seals
A…Q = standard model according to valid data sheet **(standard)**
Z…R = special model after consultation
1…9 = technical design no. directional valve (omit when ordering)
… = voltage e.g. 24 (24 V)
D = current DC
A = current AC (connection only possible with DIN EN 175301-803)
(blank) = DIN EN 175301-803 connection, 3-pole 2 P+E with mating plug, IP 65 **(standard)**
M100 = DIN EN 175301-803 connection, 3-pole 2 P+E
DT = Deutsch plug connection DT04-2P (with protection diode, IP 67/69K)
JT = Junior Timer radial plug connection (with protection diode, IP 65)
F = flying leads (600 mm)
} mating plug not supplied
(blank) = without hand lever **(standard)**
+HHB = with hand lever, detentable
+HHNB = with hand lever, not detentable
1…9 = technical design no. hand lever (omit when ordering)

Related data sheets

Reference	Description
400-P-040011	Form tools
400-P-120120	Solenoid coil D45/207
400-P-040112	Cavity AD
400-P-730121	Threaded port body GADA
400-P-010101	MTTFD Values for Hydraulic Valves

info.ch@bucherhydraulics.com **www.bucherhydraulics.com**

© 2023 by Bucher Hydraulics AG Frutigen, 3714 Frutigen, Switzerland

All rights reserved.
Data is provided for the purpose of product description only, and must not be construed as warranted characteristics in the legal sense. The information does not relieve users from the duty of conducting their own evaluations and tests. Because the products are subject to continual improvement, we reserve the right to amend the product specifications contained in this catalogue.

BUCHER hydraulics

WWW.SUMY.IR

Directional valve 3-way/2-position

Q_{max} = 40 l/min, p_{max} = 315 bar
switching solenoid, direct acting, poppet type
Type series: W1N32G-8-AU

- Screw-in cartridge valve
- For cavity AU/C1030
- All external parts with zinc-nickel plating according to DIN EN ISO 19598
- Guided valve spool and poppet
- With or without manual override
- Low head loss
- High flow rates
- The slip-on coil can be rotated, and it can be replaced without opening the hydraulic envelope
- High pressure wet-armature solenoids
- Various plug-connector systems and voltages are available

Description

The 3-way/2-position solenoid operated directional seat valves, series W1N..., are size NG8 / SAE 10, direct acting, pressure balanced, screw-in valves with a 7/8-14 UNF mounting thread. They are designed on the poppet/seat principle and in the normal condition (de-energized), flow in port 3 is shut off without leakage. The guide spool has a seal. This version is the underlapped spool model. See separate data sheet for the overlapped spool model. These valves are also available with or without manual override. All external parts of the screw-in valves are zinc-nickel plated and are thus suitable for use in the harshest operating environments. The slip-on coils can be replaced without opening the hydraulic envelope and can be positioned at any angle through 360°. These valves are predominantly used in certain mobile and industrial applications where leak-tight shut-off functions are crucially important. Examples are where loads, tensions, or clamping forces must be held without leakage. For self-assembly, please refer to the section related data sheets.

Symbol

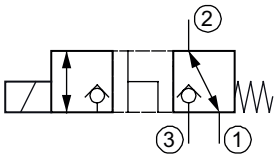

Technical data

General characteristics	Description, value, unit
Function group	Directional valve
Function	3-way/2-position
Design	Screw-in cartridge valve
Controls	switching solenoid
Characteristic	direct acting, poppet type
Construction size	NG 8 / SAE 10
Thread size	7/8-14 UNF-2A
Mounting attitude	unrestricted
Weight	0.70 kg
Cavity acc. factory standard	For cavity AU/C1030
Tightening torque steel	60 Nm
Tightening torque aluminium	60 Nm
Tightening torque tolerance	± 10 %
Minimum ambient temperature	- 25 °C
Maximum ambient temperature	+ 50 °C
Surface protection	All external parts with zinc-nickel plating according to DIN EN ISO 19598
Sealing material	see ordering code
Seal kit order number	NBR: DS-507-N / FKM: DS-507-V

IMPORTANT!
The less favorable values from the general, hydraulic and electrical characteristics determine the temperature range of the whole valve.

Hydraulic characteristics	Description, value, unit
Maximum operating pressure	315 bar
Maximum flow rate	40 l/min
Flow direction	see symbol
Hydraulic fluid	HL and HLP mineral oil according to DIN 51 524; other fluids on request!
Minimum fluid temperature	- 25 °C
Maximum fluid temperature	+ 80 °C
Viscosity range	10 ... 500 mm^2/s (cSt)
Recommended viscosity range	15 ... 250 mm^2/s (cSt)
Minimum fluid cleanliness (cleanlineless class according to ISO 4406:1999)	class 20/18/15

Electric characteristics	Description, value, unit
Actuator type	solenoid coil
Solenoid coils type	D45/207
Supply voltage DC	12/24 V DC
Supply voltage AC	115/230 (50 ... 60 Hz) V AC
Supply voltage tolerance	± 10 %
Maximum permissible power consumption	30 ... 32 W
Switching time	Flow direction 3 to 2: 17 ... 109 (energizing), 7 ... 198 (de-energizing) / Flow direction 1 to 2: 22 ... 150 (energizing), 6 ... 60 (de-energizing) / Flow direction 2 to 1: 23 ... 117 (energizing), 10 ... 72 (de-energizing) / Flow direction 2 to 3: 25 ... 138 (energizing), 7 ... 10 (de-energizing)
Relative duty cycle	100 %
Electrical connection coil	DIN EN 175301-803, 3-pole 2 P+E (IP 65)
Protection class solenoid coil to ISO 20 653 / EN 60 529	IP 65 / IP 67 / IP 69K, see “Ordering code” (with appropriate mating connector and proper fitting and sealing)

NOTE!
To ensure the performance data is not compromised, it is imperative to use coils D45/207 according to data sheet 400-P-120120.

NOTE!
These times are strongly influenced by fluid pressure, flow rate and viscosity, as well as by the dwell time under pressure.

Performance graphs

measured with oil viscosity 33.0 mm²/s (cSt), coil at steady-state temperature and 10 % undervoltage

p = f (Q) Performance limit

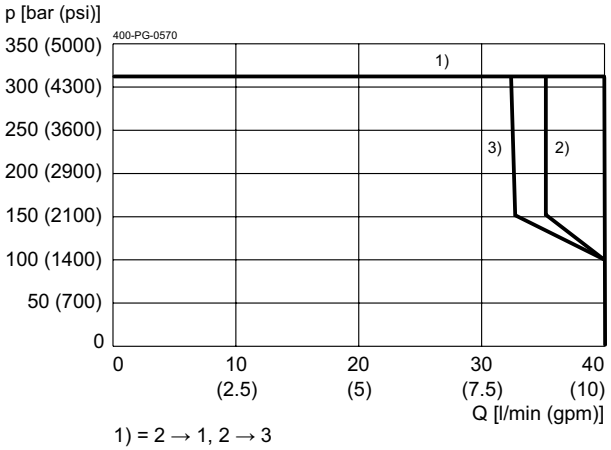

1) = 2 → 1, 2 → 3
2) = 3 → 2
3) = 1 → 2

Δp = f (Q) Pressure drop-flow rate characteristic

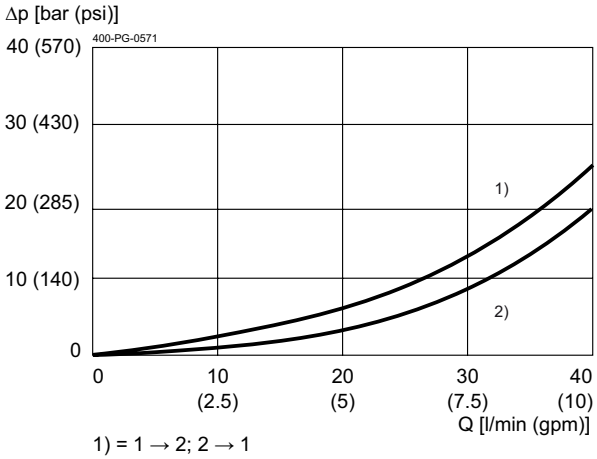

1) = 1 → 2; 2 → 1
2) = 2 → 3; 3 → 2

Dimensions and sectional view

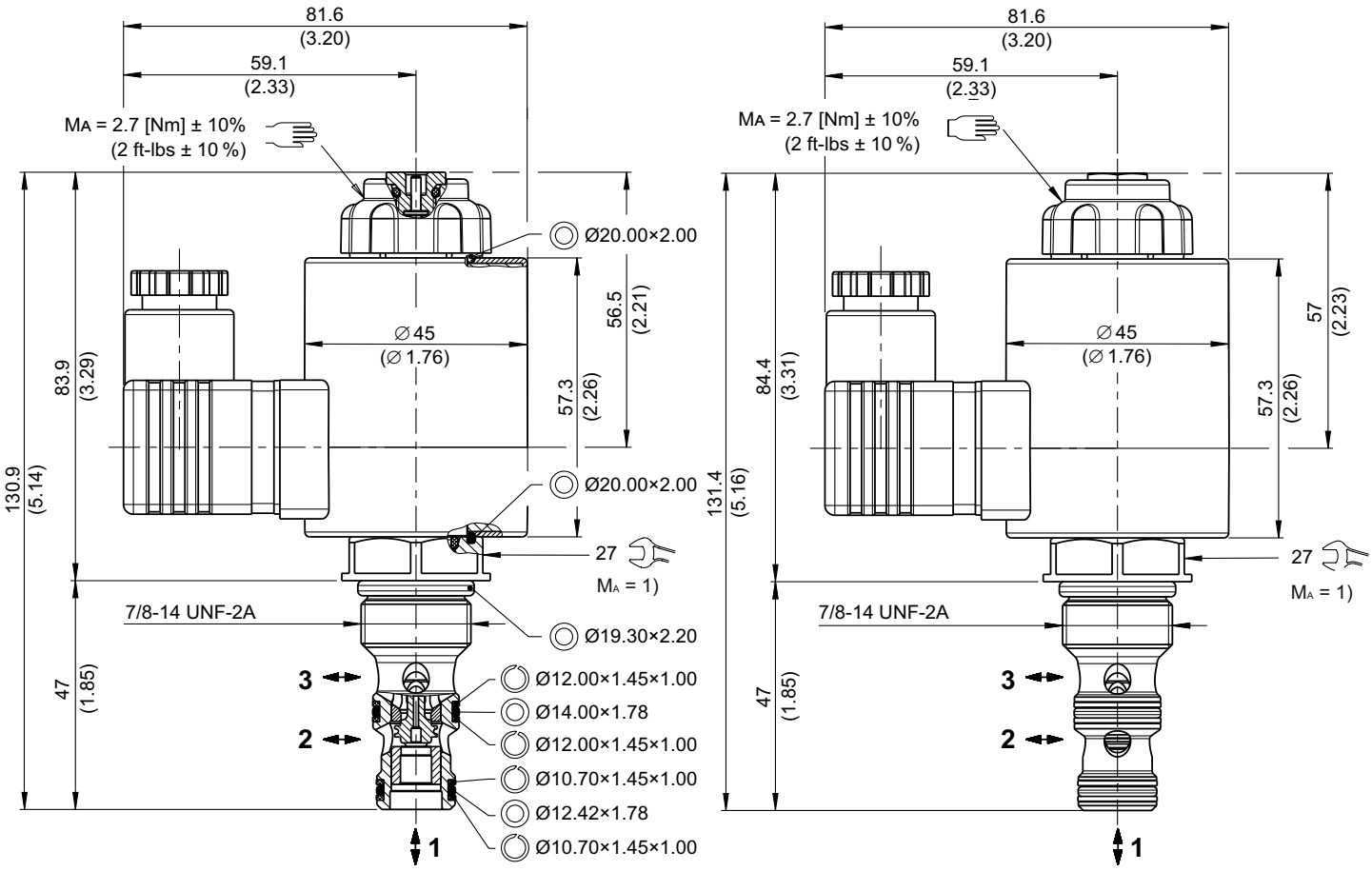

Installation information

NOTE!
1) When fitting the screw-in cartridge valve, use the specified tightening torque. The value can be found in the chapter "Technical data".

ATTENTION!
Only qualified personnel with mechanical skills may carry out any maintenance work. Generally, the only work that should ever be undertaken is to check, and possibly replace, the seals. When changing seals, oil or grease the new seals thoroughly before fitting them.

Functional principle / Spool variants

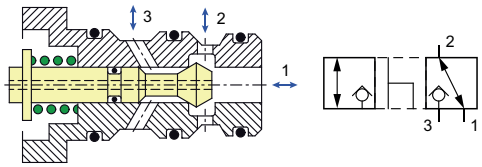

Ordering code

Ex. W1 N 32 G I U A - 8 O _ - 1 24 D _ _

W1	=	directional valve
N	=	negative overlap
32	=	3-way/2-position
G	=	spool de-energized closed
I	=	electrically operated, D45/207, 30...32W
U	=	cavity AU/C1030
A ... Q	=	standard model - see relevant data sheets
R ... Z	=	special features - please consult BUCHER
8	=	nominal size 8
O	=	without override **(standard)**
P	=	push override
(blank)	=	NBR (Nitrile) seals **(standard)**
V	=	FKM (Viton) seals (special seals - please contact BUCHER)
1 ... 9	=	design stage (omit when ordering new units)
...	=	voltage e.g. **24** (24 V)
D	=	current DC
A	=	current AC
(blank)	=	DIN EN 175301-803 connection with mating plug **(standard, IP 65)**
M100	=	DIN EN 175301-803 connection with mating plug
		for the following plug-variants [mating plug not supplied], please consult BUCHER:
DT	=	Deutsch plug connection DT04-2P (with quenching diode, IP 67/69K)
JT	=	Junior Timer radial plug connection (with quenching diode, IP 65)
F	=	flying leads (600mm) (IP 65)

Related data sheets

Reference	Description
400-P-040011	Form tools
400-P-120120	Solenoid coil D45/207
400-P-040291	Cavity AU/C1030

info.ch@bucherhydraulics.com **www.bucherhydraulics.com**

© 2023 by Bucher Hydraulics AG Frutigen, 3714 Frutigen, Switzerland

All rights reserved.
Data is provided for the purpose of product description only, and must not be construed as warranted characteristics in the legal sense. The information does not relieve users from the duty of conducting their own evaluations and tests. Because the products are subject to continual improvement, we reserve the right to amend the product specifications contained in this catalogue.

BUCHER hydraulics

WWW.SUMY.IR

Directional valve 3-way/2-position

Q_{max} = 40 l/min, p_{max} = 315 bar
switching solenoid, direct acting, poppet type
Type series: W1P32G_UA-8...

- Screw-in cartridge valve
- For cavity AU/C1030
- All external parts with zinc-nickel plating according to DIN EN ISO 19598
- The slip-on coil can be rotated, and it can be replaced without opening the hydraulic envelope
- Fits common cavity according to ISO and NFPA
- High pressure wet-armature solenoids
- Various plug-connector systems and voltages are available
- Guided valve spool and poppet
- With or without manual override
- Low head loss
- Installation in threaded port body type GAU-12

Description

The 3-way/2-position solenoid operated directional seat valves, series W1N..., are size NG 8 / SAE 10, direct acting, pressure balanced, screw-in valves with a 7/8-14 UNF mounting thread. They are designed on the poppet/seat principle and in the normal condition (de-energized), flow in port 3 is shut off without leakage. The guide spool has a seal. This version is the underlapped spool model. This model features a closed crossover characteristic i.e. during the valve's switching period (in the crossover position), there is no connection between ports 3, 2, and 1 and therefore only a minimal loss of flow/pressure occurs. See separate data sheet for the overlapped spool model.

These valves are also available with or without manual override. All external parts of the screw-in valves are zinc-nickel plated and are thus suitable for use in the harshest operating environments. The slip-on coils can be replaced without opening the hydraulic envelope and can be positioned at any angle through 360°. These valves are predominantly used in certain mobile and industrial applications where leak-tight shut-off functions are crucially important. Examples are where loads, tensions, or clamping forces must be held without leakage. For self-assembly, please refer to the section related data sheets.

Symbol

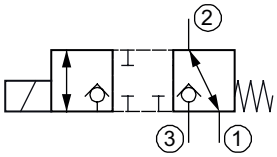

Technical data

General characteristics	Description, value, unit
Function group	Directional valve
Function	3-way/2-position
Design	Screw-in cartridge valve
Controls	switching solenoid
Characteristic	direct acting, poppet type
MTTFd value	150 years
Construction size	NG 8 / SAE 10
Thread size	7/8-14 UNF-2A
Mounting attitude	unrestricted
Weight	0.70 kg
Cavity acc. ISO	fits into ISO 17209: 7/8-03-0-13
Cavity acc. NFPA	fits into NFPA/T3.5.50: 0.875-03-0-09
Cavity acc. factory standard	For cavity AU/C1030
Tightening torque steel	60 Nm
Tightening torque tolerance	± 10 %
Minimum ambient temperature	- 25 °C
Maximum ambient temperature	+ 50 °C
Surface protection	All external parts with zinc-nickel plating according to DIN EN ISO 19598
Sealing material	see ordering code
Seal kit order number	NBR: DS-507-N / FKM: DS-507-V

IMPORTANT!
The less favorable values from the general, hydraulic and electrical characteristics determine the temperature range of the whole valve.

Hydraulic characteristics	Description, value, unit
Maximum operating pressure	315 bar
Maximum flow rate	40 l/min
Flow direction	see symbol
Hydraulic fluid	HL and HLP mineral oil according to DIN 51 524; other fluids on request!
Minimum fluid temperature	- 25 °C
Maximum fluid temperature	+ 80 °C
Viscosity range	10 ... 500 mm^2/s (cSt)
Recommended viscosity range	15 ... 250 mm^2/s (cSt)
Minimum fluid cleanliness (cleanlineless class according to ISO 4406:1999)	class 20/18/15

Electric characteristics	Description, value, unit
Actuator type	solenoid coil
Solenoid coils type	D45/207
Supply voltage DC	12/24 V DC
Supply voltage AC	115/230 (50 ... 60 Hz) V AC
Supply voltage tolerance	± 10 %
Maximum permissible power consumption	30 ... 32 W
Switching time	Flow direction 3 to 2: 17 ... 109 (energizing), 7 ... 198 (de-energizing) / Flow direction 1 to 2: 22 ... 150 (energizing), 6 ... 60 (de-energizing) / Flow direction 2 to 1: 23 ... 117 (energizing), 10 ... 72 (de-energizing) / Flow direction 2 to 3: 25 ... 138 (energizing), 7 ... 10 (de-energizing)
Relative duty cycle	100 %
Electrical connection coil	DIN EN 175301-803, 3-pole 2 P+E (IP 65)
Protection class solenoid coil to ISO 20 653 / EN 60 529	IP 65 / IP 67 / IP 69K, see “Ordering code” (with appropriate mating connector and proper fitting and sealing)

NOTE!
To ensure the performance data is not compromised, it is imperative to use coils D45/207 according to data sheet 400-P-120120.

NOTE!
The switching time can be strongly dependent on flow rate, pressure, oil viscosity and the dwell time under pressure. In practice, the switching time may therefore deviate from the specified value range.

Performance graphs

measured with oil viscosity 33.0 mm²/s (cSt), coil at steady-state temperature and 10 % undervoltage

p = f (Q) Performance limit

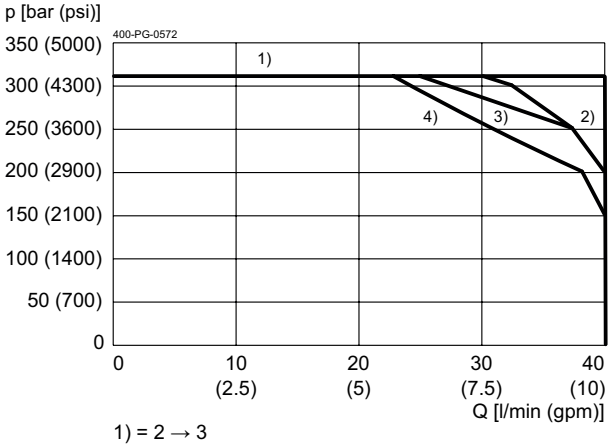

1) = 2 → 3
2) = 2 → 1
3) = 3 → 2
4) = 1 → 2

Δp = f (Q) Pressure drop-flow rate characteristic

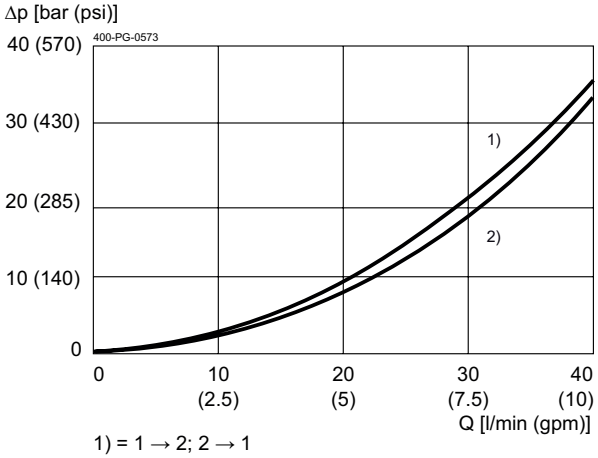

1) = 1 → 2; 2 → 1
2) = 2 → 3; 3 → 2

Dimensions and sectional view

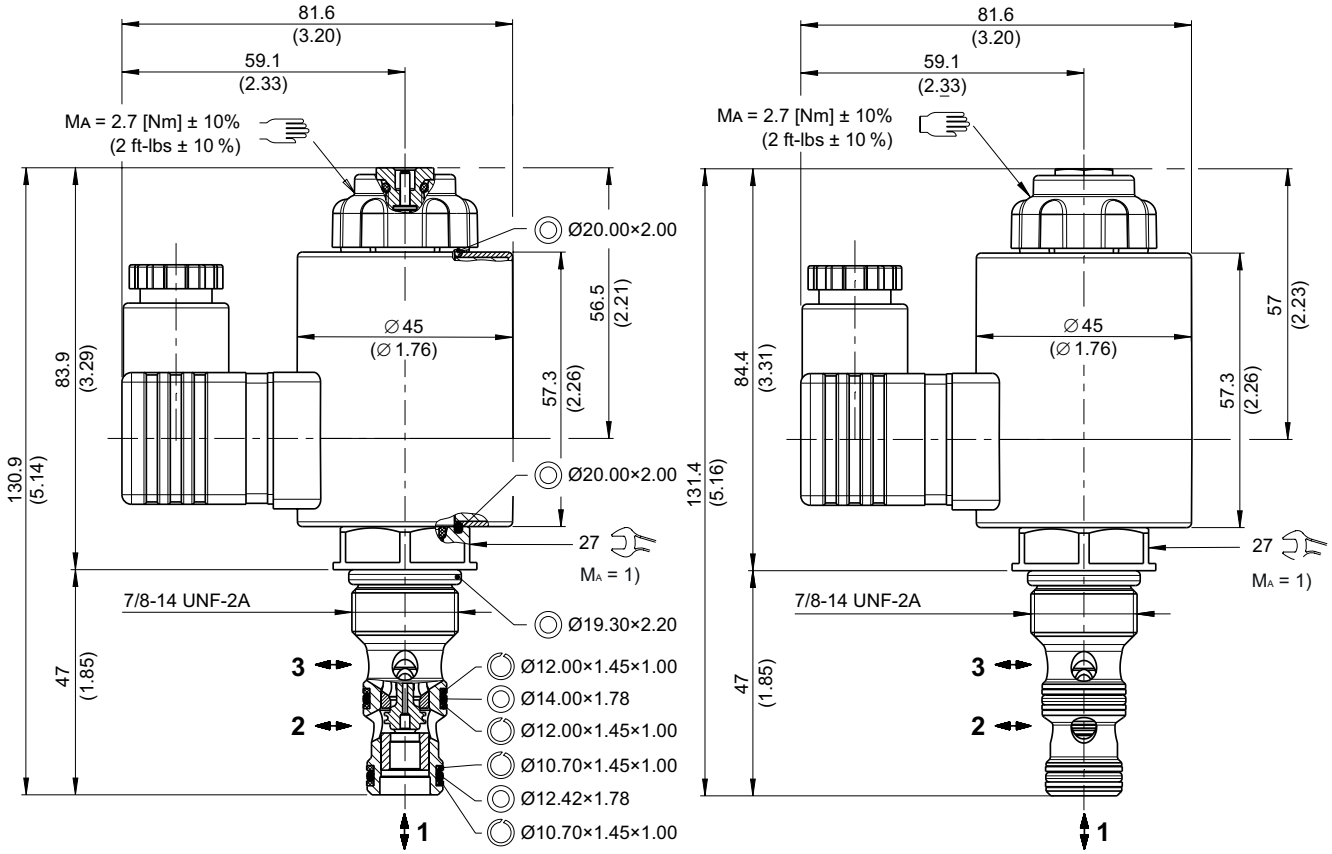

Installation information

NOTE!
1) When fitting the screw-in cartridge valve, use the specified tightening torque. The value can be found in the chapter "Technical data".

NOTE!
The seals are not available individually. The seal kit order number can be found in the chapter "Technical data".

ATTENTION!
Only qualified personnel with mechanical skills may carry out any maintenance work. Generally, the only work that should ever be undertaken is to check, and possibly replace, the seals. When changing seals, oil or grease the new seals thoroughly before fitting them.

Functional principle / Spool variants

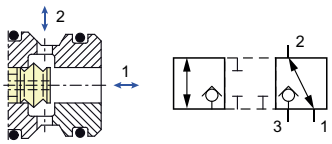

The “overlapped spool” model features a closed crossover characteristic i.e. during the valve's switching period, there is no connection between ports 3, 2, and 1 and therefore only a minimal loss of flow/pressure occurs. This is a very important benefit in small-volume circuits, and in accumulator- and clamping systems.

Ordering code

Ex. W1 P 32 G I U A - 8 O _ - 1 24 D _ _

W1	=	directional valve
P	=	positive overlap
32	=	3-way/2-position
G	=	spool de-energized closed
I	=	electrically operated, D45/207, 30...32W
U	=	cavity AU/C1030
A ... Q	=	standard model - see relevant data sheets
R ... Z	=	special features - please consult BUCHER
8	=	nominal size 8
O	=	without override **(standard)**
P	=	push override
(blank)	=	NBR (Nitrile) seals **(standard)**
V	=	FKM (Viton) seals (special seals - please contact BUCHER)
1 ... 9	=	design stage (omit when ordering new units)
...	=	voltage e.g. **24** (24 V)
D	=	current DC
A	=	current AC
(blank)	=	DIN EN 175301-803 connection with mating plug **(standard, IP 65)**
M100	=	DIN EN 175301-803 connection with mating plug
		for the following plug-variants [mating plug not supplied], please consult BUCHER:
DT	=	Deutsch plug connection DT04-2P (with quenching diode, IP 67/69K)
JT	=	Junior Timer radial plug connection (with quenching diode, IP 65)
F	=	flying leads (600mm) (IP 65)

Related data sheets

Reference	Description
400-P-040011	Form tools
400-P-120120	Solenoid coil D45/207
400-P-040291	Cavity AU/C1030
400-P-738121	Threaded port body GAU-12-...
400-P-010101	MTTFD Values for Hydraulic Valves

info.ch@bucherhydraulics.com **www.bucherhydraulics.com**

© 2023 by Bucher Hydraulics AG Frutigen, 3714 Frutigen, Switzerland

All rights reserved.
Data is provided for the purpose of product description only, and must not be construed as warranted characteristics in the legal sense. The information does not relieve users from the duty of conducting their own evaluations and tests. Because the products are subject to continual improvement, we reserve the right to amend the product specifications contained in this catalogue.

BUCHER hydraulics

WWW.SUMY.IR

Directional valve 3-way/2-position

Q_{max} = 22 l/min, p_{max} = 250 bar
switching solenoid with emergency override, direct acting, poppet type
Type series: WS32GNA5...

- Screw-in cartridge valve
- For cavity AM
- All external parts with zinc-nickel plating according to DIN EN ISO 19598
- With bidirectional seat-valve shut-off
- Low head loss
- High flow rates
- Seat tight shut-off
- Installation in threaded port body type GAMA
- De-energized closed
- The slip-on coil can be rotated, and it can be replaced without opening the hydraulic envelope
- High pressure wet-armature solenoids
- Various plug-connector systems and voltages are available

Description

The 3-way/2-position solenoid-operated directional valves, series WS32G..., are size 5, screw-in valves with a 3/4-16 UNF mounting thread. They are designed on the poppet/seat principle, and are therefore virtually leak-free. All external parts of the cartridge are zinc-nickel plated, and are thus suitable for use in the harshest operating environments. The slip-on coils can be replaced without opening the hydraulic envelope and can be positioned at any angle through 360°. These valves are primarily used as pilot valves in certain mobile and industrial applications where leak-tight shut-off functions are crucially important. Examples are where loads, tensions, or clamping forces must be held without leakage. For self-assembly, please refer to the section realted datasheets.

Symbol

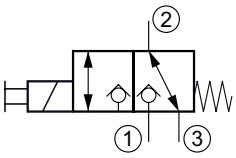

Technical data

General characteristics	Description, value, unit
Function group	Directional valve
Function	3-way/2-position
Design	Screw-in cartridge valve
Controls	switching solenoid with emergency override
Characteristic	direct acting, poppet type
Construction size	NG 5
Thread size	3/4-16 UNF-2A
Mounting attitude	unrestricted
Weight	0.38 kg
Cavity acc. factory standard	For cavity AM
Tightening torque steel	50 Nm
Tightening torque aluminium	50 Nm
Minimum ambient temperature	- 25 °C
Maximum ambient temperature	+ 50 °C
Surface protection	All external parts with zinc-nickel plating according to DIN EN ISO 19598
Sealing material	see ordering code
Seal kit order number	NBR: DS-247-N / FKM DS-247-V

Hydraulic characteristics	Description, value, unit
Maximum operating pressure	250 bar
Maximum flow rate	22 l/min
Flow direction	see symbol
Hydraulic fluid	HL and HLP mineral oil according to DIN 51 524; other fluids on request!
Minimum fluid temperature	- 25 °C
Maximum fluid temperature	+ 80 °C
Viscosity range	10 ... 500 mm^2/s (cSt)
Recommended viscosity range	15 ... 250 mm^2/s (cSt)
Minimum fluid cleanliness (cleanlineless class according to ISO 4406:1999)	class 20/18/15

Electric characteristics	Description, value, unit
Actuator type	solenoid coil
Solenoid coils type	D36
Supply voltage DC	12/24 V DC
Supply voltage AC	115/230 (50 ... 60 Hz) V AC
Supply voltage tolerance	± 10 %
Maximum permissible power consumption	VAC = 25 W / VDC = 27 W
Switching time	34 ... 300ms (energizing), 10... 30ms (de-energizing)
Relative duty cycle	100 %
Electrical connection coil	several connection types available, see ordering code
Protection class solenoid coil to ISO 20 653 / EN 60 529	IP 65 / IP 67 / IP 69K, see “Ordering code” (with appropriate mating connector and proper fitting and sealing)

NOTE!
The switching time can be strongly influenced by flow rate, pressure, viscosity, and the dwell period under pressure. In practice, the switching time may therefore deviate from the specified value range.

Performance graphs

measured with oil viscosity 33.0 mm²/s (cSt), coil at steady-state temperature and 10 % undervoltage

p = f (Q) Performance limit

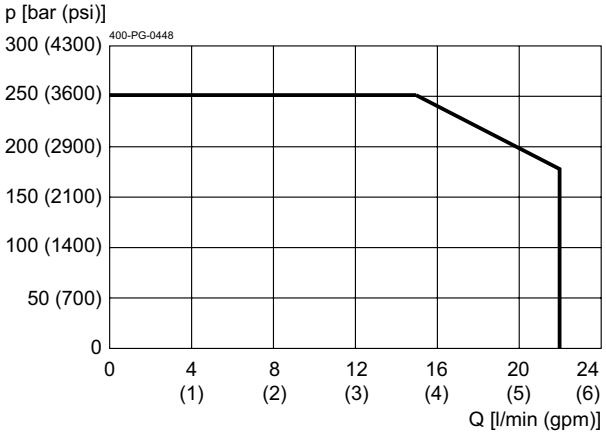

Permissible pressures are dependent on the volume flow direction.
Direction 1 to 2 and 2 to 3:
250 bar at port 1 and 2
20 bar at port 3
Direction 3 to 2 and 2 to 1:
250 bar at port 2 and 3
20 bar at port 1

p = f (Q) Performance limit

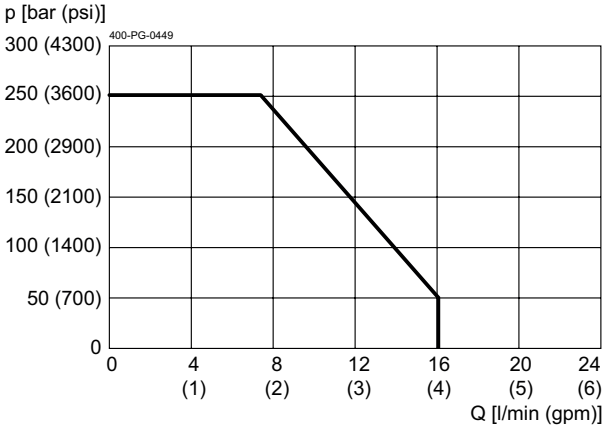

The max. operating pressure of 250 bar applies to all volume flow directions.

Δp = f (Q) Pressure drop-flow rate characteristic

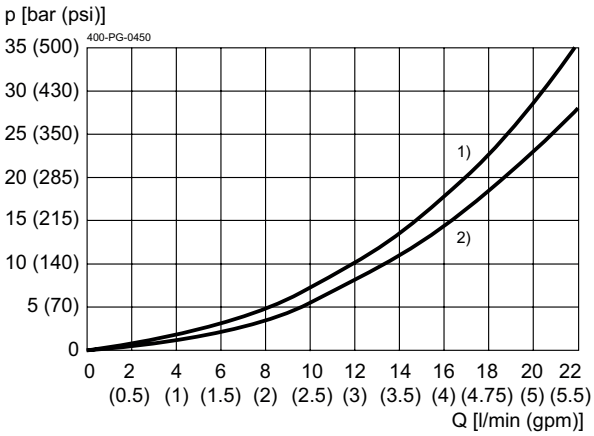

1) 1 → 2
2) 2 → 3

Dimensions and sectional view

Beispiel für die Masseinheit:
Example for the dimensional units:

0.79 = 0.79 mm millimeter
(.031) = 0.031" inch

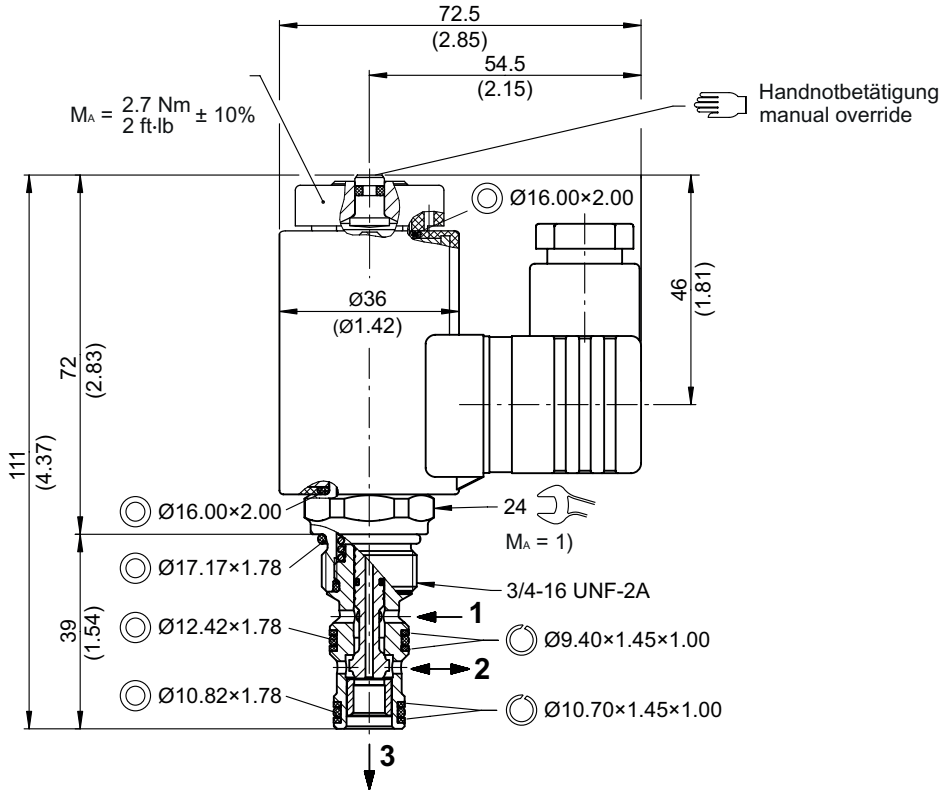

Installation information

IMPORTANT!
1) When fitting the screw-in cartridge valve, use the specified tightening torque. The value can be found in the chapter "Technical data".

NOTE!
The seals are not available individually. The seal kit order number can be found in the chapter "Technical data".

ATTENTION!
Only qualified personnel with mechanical skills may carry out any maintenance work. Generally, the only work that should ever be undertaken is to check, and possibly replace, the seals. When changing seals, oil or grease the new seals thoroughly before fitting them.

Ordering code

Ex. W | S | 32G | N | A | 5 | _ | - | 2 | 24 | D | _

W	=	directional valve
S	=	seat type, direct acting
32G	=	3-way/2-position function, de−energized closed
N	=	electrically operated, V DC = 27 W / V AC = 25 W
A ... Q	=	standard model - see relevant data sheets
Z ... R	=	special features - please consult BUCHER
5	=	nominal size 5
(blank)	=	NBR (nitril-butadien-rubber / BUNA) seals *(standard)*
V	=	FKM (fluorocarbon rubber / VITON) seals *(special seals - please contact BUCHER)*
1 ... 9	=	design stage (omit when ordering)
...	=	voltage e.g. 24 (24 V)
D	=	current DC
A	=	current AC
(blank)	=	DIN EN 175301-803 connection, 3-pole 2 P+E with mating plug, IP 65 *(standard)*
M100	=	DIN EN 175301-803 connection, 3-pole 2 P+E
C	=	Kostal plug connection (IP 65)
JT	=	Junior Timer radial plug connection (with protection diode, IP65)
IT	=	Junior Timer axial plug connection (with protection diode, IP65)
D	=	Deutsch plug connection DT04-2P (IP 67/69K)
DT	=	Deutsch plug connection DT04-2P (with protection diode, IP 67/69K)
S	=	AMP Superseal 1.5 (IP67) / Metri-Pack 150 (IP65) plug connection
F	=	flying leads (500 mm)

mating plug not supplied

Related data sheets

Reference	Description
400-P-040011	Form tools
400-P-120110	Solenoid coil D36
400-P-040181	Cavity AM
400-P-720111	Threaded port body GAMA

info.ch@bucherhydraulics.com **www.bucherhydraulics.com**

© 2023 by Bucher Hydraulics AG Frutigen, 3714 Frutigen, Switzerland

All rights reserved.
Data is provided for the purpose of product description only, and must not be construed as warranted characteristics in the legal sense. The information does not relieve users from the duty of conducting their own evaluations and tests. Because the products are subject to continual improvement, we reserve the right to amend the product specifications contained in this catalogue.

BUCHER hydraulics
WWW.SUMY.IR

General information
Cavity

Type series: DN

Dimensions and sectional view

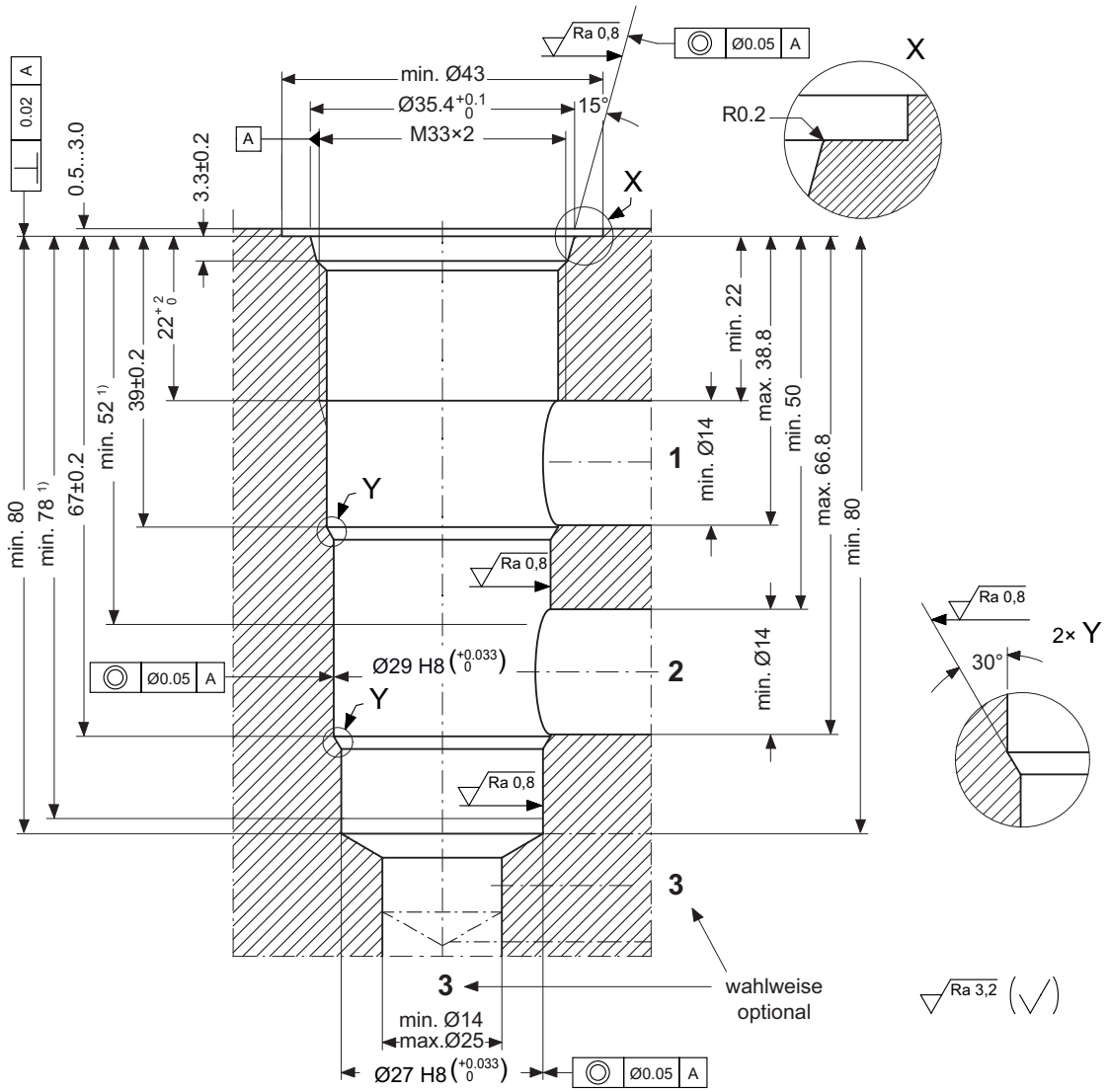

HINWEIS!
NOTE!

1) Passungstiefe
Minimum depth of specified diametral tolerance

Beispiel für die Masseinheit:
Example for the dimensional units:

0.79 = 0.79 mm millimeter

WWW.SUMY.IR

Installation information

ATTENTION!
You must maintain the specified positional and diametral tolerances. To ensure trouble-free operation of the screw-in cartridges, we strongly recommend that pilot drilling, boring, reaming and cavity thread-cutting are always performed in one setup.

NOTE!
The cavity type DN complies with the standard according to ISO 7789: 33-04-0-07.

NOTE!
We offer form tool sets for sale or hire. For further information, see data sheet 400-P-040011.

info.ch@bucherhydraulics.com **www.bucherhydraulics.com**

© 2023 by Bucher Hydraulics AG Frutigen, 3714 Frutigen, Switzerland

All rights reserved.
Data is provided for the purpose of product description only, and must not be construed as warranted characteristics in the legal sense. The information does not relieve users from the duty of conducting their own evaluations and tests. Because the products are subject to continual improvement, we reserve the right to amend the product specifications contained in this catalogue.

BUCHER hydraulics

WWW.SUMY.IR

Directional valve 3-way/2-position

Q_{max} = 60 l/min, p_{max} = 315 bar
direct acting, seat design, switching solenoid with emergency override
Type series: WSP32GA10-...

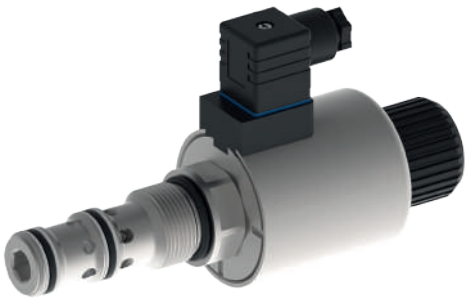

- Screw-in cartridge valve
- For cavity DN
- All external parts with zinc-nickel plating according to DIN EN ISO 19598
- Low head loss
- Compact construction
- Installation in threaded port body type GCBA
- The slip-on coil can be rotated, and it can be replaced without opening the hydraulic envelope
- High pressure wet-armature solenoids
- Various plug-connector systems and voltages are available

Description

The 3-way/2-position solenoid operated directional valves, series WSP32G..., are size 10, screw-in valves with an M33×2 mounting thread. They are direct-acting seat valves. Thanks to their closed-crossover (overlap) feature, there is no connection between ports 1, 2 and 3 while the valves are switching. The valves are therefore ideally suited for use with pressure accumulators. All external parts of the screw-in valves are zinc-nickel plated and are thus suitable for use in the harshest operating environments. The slip-on coils can be replaced without opening the hydraulic envelope and can be positioned at any angle through 360°. For self-assembly, please refer to the section related data sheets.

Symbol

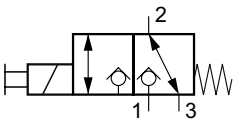

Technical data

General characteristics	Description, value, unit
Function group	Directional valve
Function	3-way/2-position
Design	Screw-in cartridge valve
Controls	switching solenoid with emergency override
Characteristic	direct acting, seat design
Construction size	NG 10
Thread size	M33×2
Mounting attitude	unrestricted
Weight	1.2 kg
Cavity acc. factory standard	For cavity DN
Tightening torque steel	150 Nm
Minimum ambient temperature	- 30 °C
Maximum ambient temperature	+ 50 °C
Surface protection	All external parts with zinc-nickel plating according to DIN EN ISO 19598
Sealing material	see ordering code
Seal kit order number	NBR: DS-336-N / FKM: DS-336-V

Hydraulic characteristics	Description, value, unit
Maximum operating pressure	315 bar
Restriction of the operating pressure	210 bar
Maximum flow rate	60 l/min
Flow direction	see symbol
Hydraulic fluid	HL and HLP mineral oil according to DIN 51 524; other fluids on request!
Minimum fluid temperature	- 30 °C
Maximum fluid temperature	+ 80 °C
Viscosity range	10 ... 500 mm^2/s (cSt)
Recommended viscosity range	15 ... 250 mm^2/s (cSt)
Minimum fluid cleanliness (cleanlineless class according to ISO 4406:1999)	class 20/18/15

Electric characteristics	Description, value, unit
Actuator type	solenoid coil
Solenoid coils type	D65/31
Supply voltage DC	24 V DC
Supply voltage tolerance	± 5 %
Nominal power consumption	39 W
Switching time	50 ... 300 ms (energizing), 30 ... 100 ms (de-energizing)
Relative duty cycle	100 %
Electrical connection coil	several connection types available, see ordering code
Protection class solenoid coil to ISO 20 653 / EN 60 529	several classes of protection available, see ordering code (with appropriate mating connector and proper fitting and sealing)

NOTE!
The switching time can be strongly influenced by flow rate, pressure, viscosity, and the dwell period under pressure. In practice, the switching time may therefore deviate from the specified value range.

NOTE!
The less favorable values from the general, hydraulic and electrical characteristics determine the temperature range of the whole valve.

Performance graphs

measured with oil viscosity 33.0 mm²/s (cSt)

p = f (Q) Performance limit

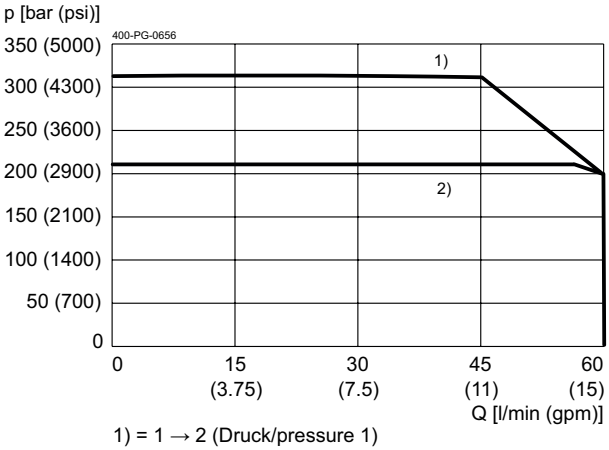

1) = 1 → 2 (Druck/pressure 1)
2) = 3 → 2 (Druck/pressure 3)

Δp = f (Q) Pressure drop-flow rate characteristic

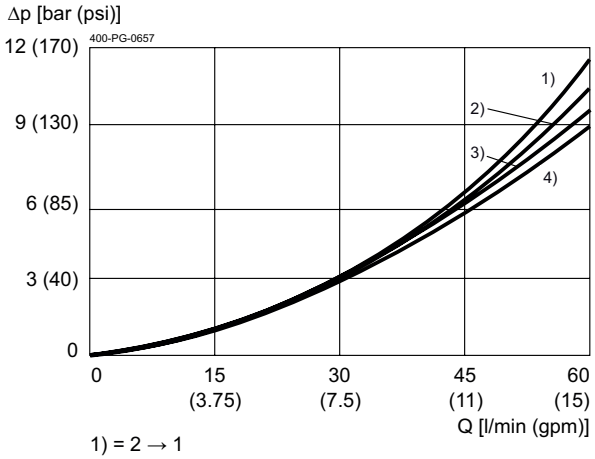

1) = 2 → 1
2) = 2 → 3
3) = 1 → 2
4) = 3 → 2

Dimensions and sectional view

Beispiel für die Masseinheit:
Example for the dimensional units:

0.79 = 0.79 mm millimeter
(.031) = 0.031" inch

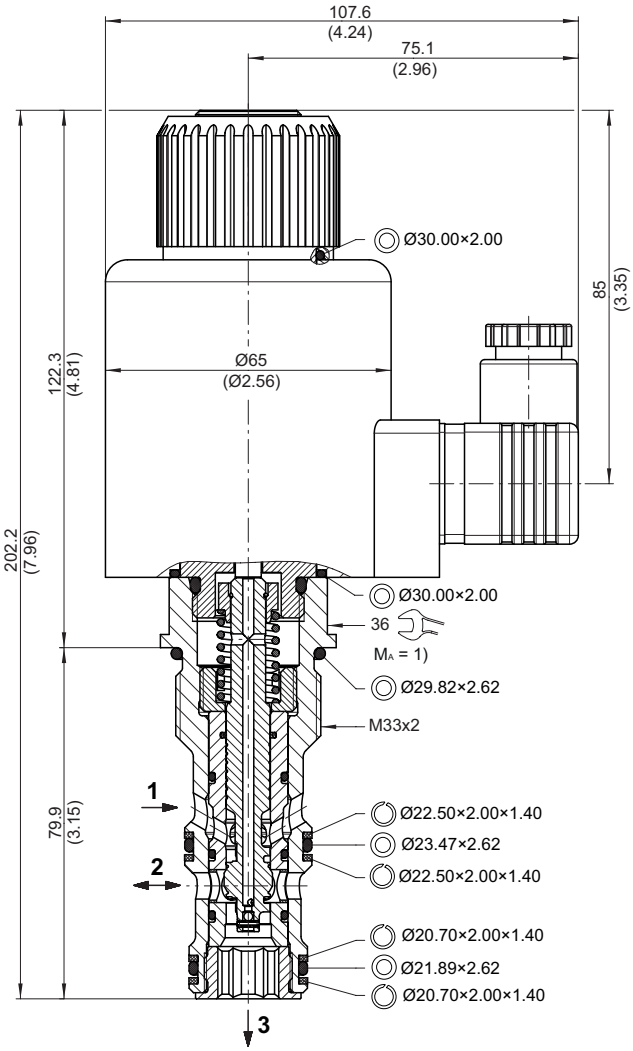

Installation information

ATTENTION!
Only qualified personnel with mechanical skills may carry out any maintenance work. Generally, the only work that should ever be undertaken is to check, and possibly replace, the seals. When changing seals, oil or grease the new seals thoroughly before fitting them.

IMPORTANT!
1) When fitting the screw-in cartridge valve, use the specified tightening torque. The value can be found in the chapter "Technical data".

Ordering code

Ex. W S P 32G A 10 _ - 1 24 D _

W	=	directional valve
S	=	seat-valve, direct acting
P	=	closed crossover (overlap)
32G	=	3-way/2-position function, de-energized closed
A ... Q	=	standard model - see relevant data sheets
Y... R	=	special features on request
10	=	nominal size 10
blank	=	NBR (nitril-butadien-rubber / BUNA) seals **(standard)**
V	=	FKM (fluorocarbon rubber / VITON) seals (special seals on request)
1 ... 9	=	design stage (omit when ordering)
24	=	voltage 24 V
D	=	current DC
blank	=	DIN EN 175301-803 connection, 3-pole 2 P+E with mating plug, IP 65 **(standard)**
M100	=	DIN EN 175301-803 connection, 3-pole 2 P+E the following plug-variants on request:
JT	=	Junior Timer radial plug connection (with protection diode, IP65)
DT	=	Deutsch plug connection (with protection diode, IP 67/69K) (only 12 and 24 V DC)

mating plug not supplied

Related data sheets

Reference	Description
400-P-040011	Form tools
400-P-060191	Cavity DN
400-P-740141	Threaded port body GCBA

info.ch@bucherhydraulics.com
www.bucherhydraulics.com

© 2024 by Bucher Hydraulics AG Frutigen, 3714 Frutigen, Switzerland

All rights reserved.
Data is provided for the purpose of product description only, and must not be construed as warranted characteristics in the legal sense. The information does not relieve users from the duty of conducting their own evaluations and tests. Because the products are subject to continual improvement, we reserve the right to amend the product specifications contained in this catalogue.

3/2 Solenoid Cartridge Valve, Size 6

Q_{max} = 20 l/min (5.3 gpm), p_{max} = 315 bar (4500 psi)
Bidirectional leak-proof shutoff, direct acting, with EX-safety solenoid
Coil Series EEX-W1D.B…

Valve:
- Guided valve spool and poppet
- Available in two mounting versions
- With or without manual override

Solenoid coil:
- To IEC/EN 60079-0, IEC/EN 60079-7, IEC/EN 60 079-18
- For equipment in Category 2 (Zones 1 and 2)
- Certificate of conformity: BASEEFA 02 ATEX 0199 X

Ex II 2 G Ex e mb IIC T4 Gb

1 Description

The EEX-W1D… series of 3/2 solenoid operated directional seat valves are size 6, direct acting, pressure balanced, push-in cartridges. An EX-protected solenoid for explosive gas atmospheres (II 2 G) is used to provide electrical operation of the cartridge. In the normal condition (de-energised), flow in port 1 is shut off without leakage. The core element operates on the tried and tested principle of the guided poppet, and the guide spool has a seal. Two different mounting versions are available, which allows the designer to choose the insertion depth (flange 10.1 mm or 18 mm). These cartridge seat valves are also available with or without manual override lever. These valves are predominantly used in certain mobile and industrial applications where leak-tight shut-off functions are crucially important. Examples are where loads, tensions, or clamping forces must be held without leakage. All external parts of the valve are corrosion-protected, and the valves are thus also suitable for use outdoors.

Ex: Solenoid conforms to the European standards IEC/EN 60079-0, IEC/EN 60079-7, IEC/EN 60079-18
e: Increased safety
mb: Encapsulation
Group IIC: For use in explosive gas atmospheres
T4: Max. surface temperature 135 °C
Gb: For use in Zone 1 (Zone 2) with foreseeable faults
Certificate of conformitys:
BASEEFA 02 ATEX 0199 X
IECEx BAS13.0093X (on request)

2 Symbol

3 Technical data

General characteristics	Description, value, unit
Designation	3/2 solenoid cartridge valve
Design	bidirectional leak-proof shutoff, direct acting poppet and valve-spool design (pressure balanced) with EX-protected solenoid
Mounting method	push-in cartridge, 4 mounting bolts M5 x 10
Tightening torque	5.2 Nm ± 5 % (4 ft-lbs ± 5 %)
Size	size 6, cavity type AC or cavity type AD

WWW.SUMY.IR

General characteristics	Description, value, unit
Weight	1.4 kg
Mounting attitude	unrestricted
Ambient temperature range	see hydraulic and electrical characteristics

Hydraulic characteristics	Description, value, unit	
Maximum operating pressure	315 bar	(4500 psi)
Maximum flow rate	20 l/min	(5.3 gpm)
Flow direction	see symbols	
Hydraulic fluid	HL and HLP mineral oil to DIN 51 524; for other fluids, please contact BUCHER	
Ambient temperature range [1)]	-25 °C … +80 °C	(-13 °F … 176 °F)
Hydraulic fluid temperature range [1)]	-25 °C … +80 °C [2)]	(-13 °F … 176 °F) [2)]
Viscosity range	10…500 mm^2/s (cSt), recommended 15...250 mm^2/s (cSt)	
Minimum fluid cleanliness Cleanliness class to ISO 4406 : 1999	class 20/18/15	

Electrical characteristics	Description, value, unit	
Supply voltage	24 V DC 230 V AC In AC solenoids, rectifier is integrated.	
Supply voltage tolerance	± 10 %	
Ambient temperature range [1)]	-40 °C … +40 °C (Operation as T4)	(-40 °F … +104 °F)
Temperatue class	T1 … T4	
EX-protection marking	II 2 G, Ex e mb IIC T4 Gb	
Nominal power consumption	31,9 W at 20 °C	(31.9 W at 68 °F)
Relative duty cycle	100 %	
Protection class to ISO 20 653 / EN 60 529	IP 54 (with properly fitted cable gland and properly made cable connection)	
Electrical connection	Shipped **without** cable gland (M20 x 1.5) and **without** cable Cable-entry temperature may exceed 70 °C	

IMPORTANT!:

[1)] The less favourable values from the hydraulic and electrical characteristics determine the temperature range of the whole valve.

IMPORTANT!:

[2)] The maximum fluid temperature must not exceed the permissible ambient temperature for the whole valve.

4 Performance graphs

measured with oil viscosity 33 mm²/s (cSt), coil at steady-state temperature and 10 % undervoltage

p = f (Q) Performance limits

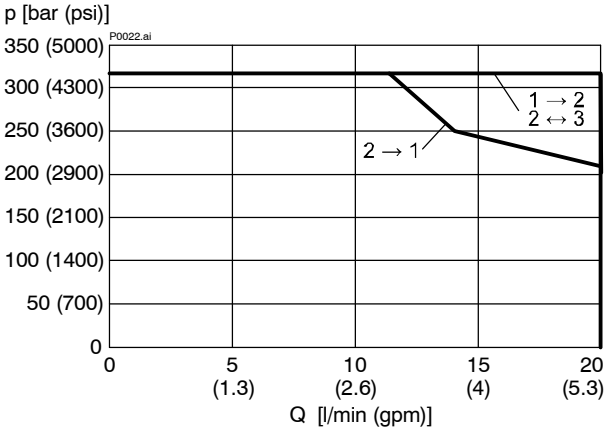

Δp = f (Q) Pressure drop - Flow rate characteristic

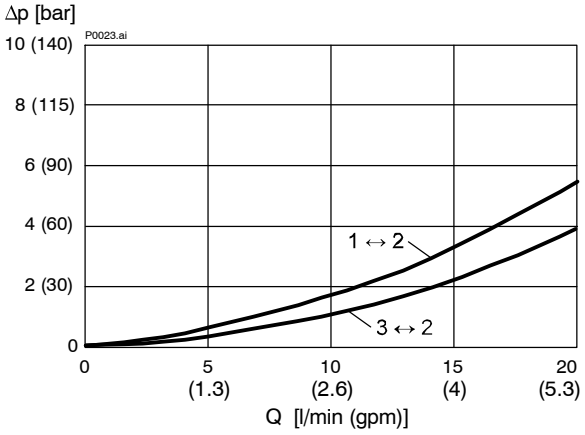

5 Installation information

COMMISSIONING

- For short-circuit protection, each solenoid must be preceded by a fuse conforming to B588 or IEC269 with a maximum rating of 2 A (AC) or 6 A (DC).
- The solenoid coils must only be operated when they are fitted on the associated valve. For more information on installation and commissioning, please refer to the operating instructions supplied with the solenoid coil.

ATTENTION!

Ratings given in the operating instructions
Pay attention to the relevant operating instructions! If in doubt, the ratings in the operating instructions apply.

ATTENTION!
Only qualified personnel with mechanical skills may carry out any maintenance work. Generally, the only work that should ever be undertaken is to check, and possibly replace, the seals. When changing seals, oil or grease the new seals thoroughly before fitting them.

ATTENTION!

Authorised persons
The tasks described here may only be carried out by authorised personnel. Authorised personnel are those who have electro-technical training (EN 60204-1).

IMPORTANT!
When fitting the cartridges, use the specified tightening torque for the mounting bolts. The marking "Valve End" on the adapter sleeve must be mounted towards the valve flange! No adjustments are necessary, since the cartridges are set in the factory.

IMPORTANT!
Minimum dimensions of the valve body
62.5 x 46 x 45.5 mm
Minimum dimensions of the mating body
101 x 46 x 43 mm
See also the user manual.

6 Dimensions & sectional view

6.1 Shallow insertion model

6.2 Deep insertion model

(shown here without manual override)

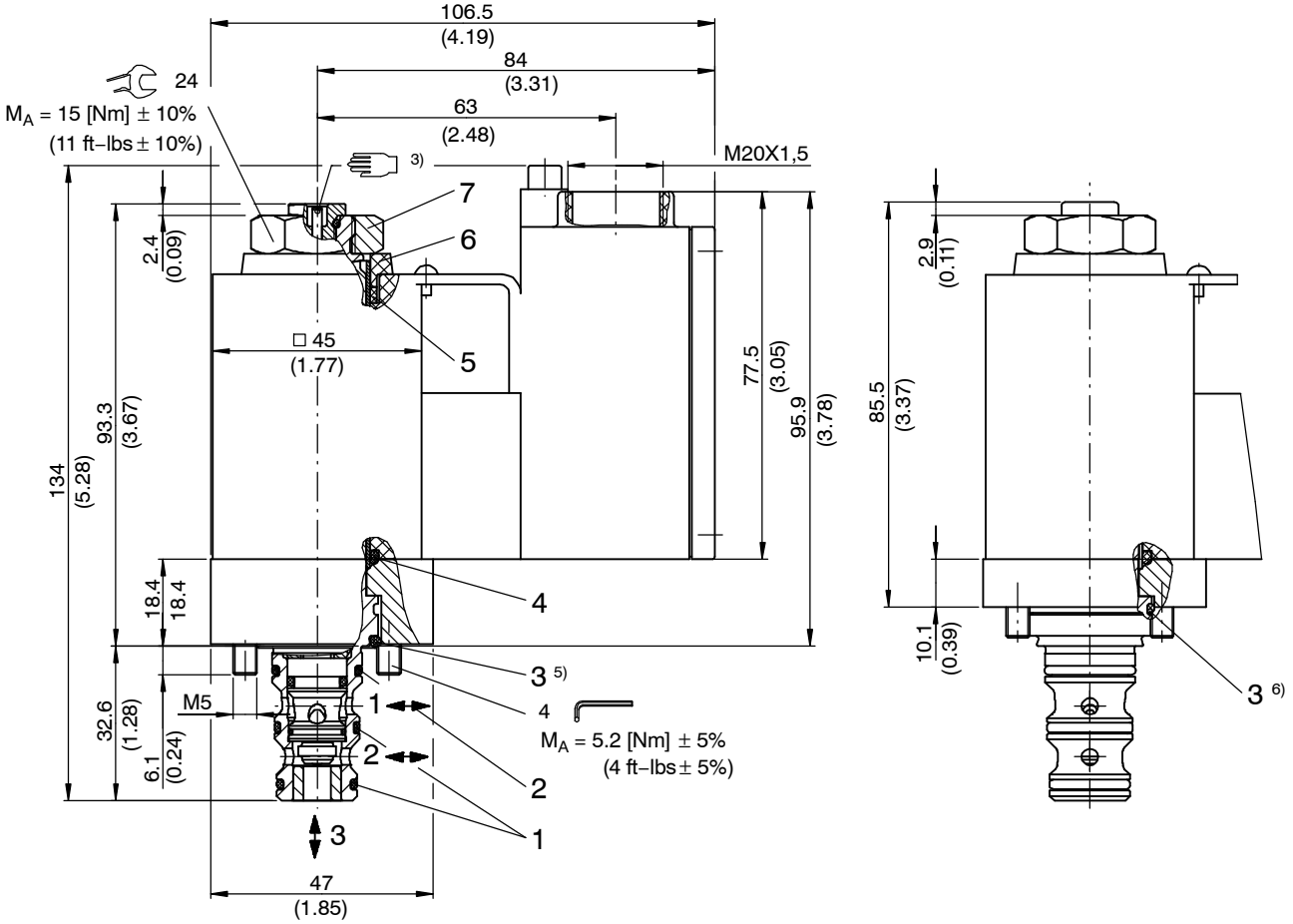

Seal kit no. DS-263-N 4)

Item	Qty. 5)	Qty. 6)	Description
1	2	2	O-ring no. 015 ∅ 14,00 x 1,78 N90
2	1	1	O-ring no. 016 ∅ 15,60 x 1,78 N90
3	1	- - -	O-ring no. 116 ∅ 18,72 x 2,62 N70
	- - -	1	O-ring no. 021 ∅ 23,52 x 1,78 N90
4	1	1	O-ring no. 116 ∅ 18,72 x 2,62 V70
5	1	1	Seal solenoid EX EMB D25,3
6	1	1	Spacer ring solenoid EX EMB
7	1	1	6AF hex DIN439B M16X1,5 KL04 VZ

IMPORTANT!

3) Can be chosen **with** or **without** manual override. (see ordering code)
4) Seal kit with Viton seals, no. DS-263-V
5) W1DB… / W1DD… (Shallow insertion model)
6) W1DC… / W1DE… (Deep insertion model)

7 Functional principle / Spool variants

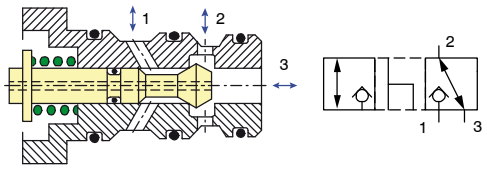

Underlapped spool

8 Ordering code

Ex. EEX - W1 D B B _ 24 D

EEX	=	EX-protected solenoid coil instead of standard solenoid coil (for details, see electrical characteristics)
W1	=	directional seat valve, de-energised 1 " 2 closed
D	=	standard spool, 3/2 function, solenoid operated

Nitrile-seals	Viton-seals	Mounting depth (Cavity types AC and AD)		
B	G	shallow	=	with manual override
C	H	deep	=	with manual override
D	I	shallow	=	without manual override
E	K	deep	=	without manual override

B ... Q	=	standard model - see relevant data sheets
Z ... R	=	special features - please consult BUCHER
1 ... 9	=	design number, seat valve (omit when ordering new units)
...	=	voltage e.g. 24 (24 V)
D	=	current DC
A	=	current AC

9 Related data sheets

Reference	(Old no.)	Description
400-P-040011	(i-32)	The form-tool hire programme
400-P-040111	(i-33.2)	Cavity type AC and AD
D14-2117D		Operating instructions for solenoid coil DC LISK
K14-2068D		Operating instructions for solenoid coil AC LISK
D14-2130D3		Operating instructions for solenoid coil DC LISK IEC (on request)
D14-2078D3		Operating instructions for solenoid coil AC LISK IEC (on request)

info.ch@bucherhydraulics.com www.bucherhydraulics.com

© 2021 by Bucher Hydraulics AG Frutigen, CH-3714 Frutigen
All rights reserved.
Data is provided for the purpose of product description only, and must not be construed as warranted characteristics in the legal sense. The information does not relieve users from the duty of conducting their own evaluations and tests. Because the products are subject to continual improvement, we reserve the right to amend the product specifications contained in this catalogue.

Classification: 430.300.-.305.310.300

BUCHER hydraulics

WWW.SUMY.IR

Directional valve 3-way/2-position

Q_{max} = 40 l/min, p_{max} = 315 bar
direct acting, poppet type, mechanical operation
Type series: W1U.../ W1X... (installation shallow)

- Slip-in cartridge valve
- For cavity AC
- All external parts with zinc-nickel plating according to DIN EN ISO 19598
- Guided valve spool and poppet
- Seat tight shut-off
- Hand lever with or without detent feature

Description

The 3-way/2-position solenoid-operated directional seat valves, series W1U... / W1X... (installation shallow), are size 6, direct acting, and pressure balanced screw-in valves. In the normal condition (non-operated), flow in port 1 is shut off without leakage. They are designed on the tried and tested principle of the guided poppet, and the guide spool has a seal. This valve type has an underlapped spool. In the crossover position, all connections are thus connected, i.e., there is a connection between ports 1, 2 and 3 during the valve's switching period. This type is the "shallow" installation version, which fits into the cavity type according to the AC factory standard. For the "deep" installation version, see separate data sheet. The hand lever can be turned through 360° and is available as a "detentable" (W1U...) or "non-detentable" (W1X...) model. All external parts of the cartridge are zinc-nickel plated, and are thus suitable for use in the harshest operating environments. The slip-on coils can be replaced without opening the hydraulic envelope and can be positioned at any angle through 360°. These valves are predominantly used in certain mobile and industrial applications where leak-tight shut-off functions are crucially important. Examples are where loads, tensions, or clamping forces must be held without leakage. For self-assembly, please refer to the section related data sheets.

Symbol

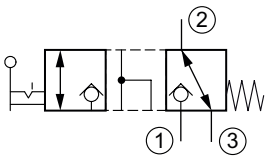

W1U...

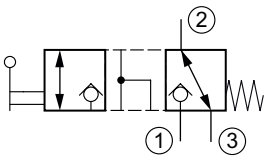

W1X...

Technical data

General characteristics	Description, value, unit
Function group	Directional valve
Function	3-way/2-position
Design	Slip-in cartridge valve
Controls	mechanical operation
Characteristic	direct acting, poppet type
Transition/central position of spool/piston	zero or underlap/negative (open)
Construction size	nominal size 6
Mounting attitude	unrestricted
Weight	0.55 kg
Cavity acc. factory standard	For cavity AC
Tightening torque steel	5.2 Nm
Tightening torque aluminium	5.2 Nm
Tightening torque tolerance	± 5 %
Minimum ambient temperature	- 25 °C
Maximum ambient temperature	+ 80 °C
Surface protection	All external parts with zinc-nickel plating according to DIN EN ISO 19598
Sealing material	see ordering code
Seal kit order number	NBR: DS-387-N / FKM: DS-387-V

Hydraulic characteristics	Description, value, unit
Maximum operating pressure	315 bar
Maximum flow rate	40 l/min
Flow direction	see symbol
Hydraulic fluid	HL and HLP mineral oil according to DIN 51 524; other fluids on request!
Minimum fluid temperature	- 25 °C
Maximum fluid temperature	+ 80 °C
Viscosity range	10 ... 500 mm^2/s (cSt)
Recommended viscosity range	15 ... 250 mm^2/s (cSt)
Minimum fluid cleanliness (cleanlineless class according to ISO 4406:1999)	class 20/18/15

Mechanical characteristics	Description, value, unit
Execution	with hand lever, can be turned through 360°
Actuation angle	15 °

Performance graphs

measured with oil viscosity 33.0 mm²/s (cSt)

p = f (Q) Performance limit

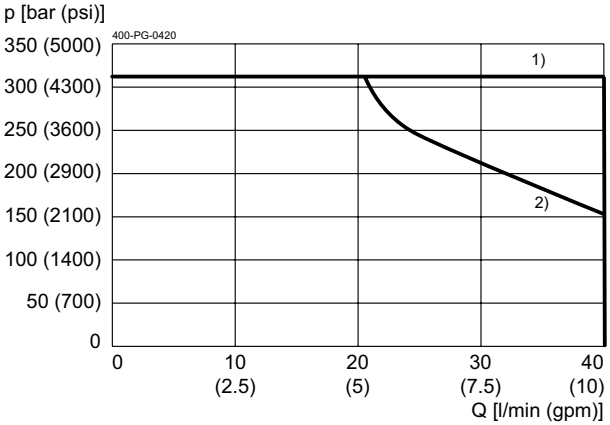

1) = 1 →2, 2 → 1, 2 → 3
2) = 3 → 2

Δp = f (Q) Pressure drop-flow rate characteristic

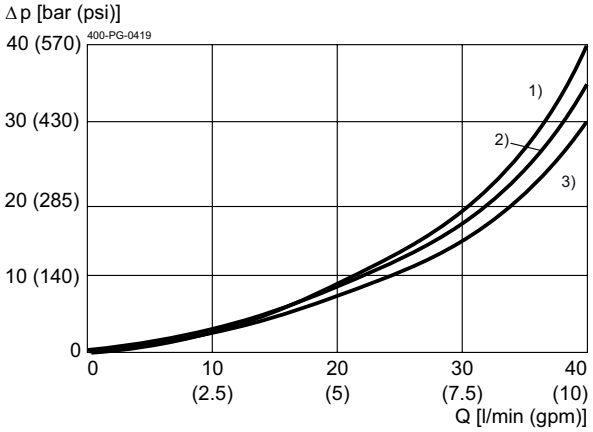

1) = 2 → 1; 2 → 3
2) = 1 → 2
3) = 3 → 2

Dimensions and sectional view

Beispiel für die Masseinheit:
Example for the dimensional units:

0.79 = 0.79 mm millimeter
(.031) = 0.031" inch

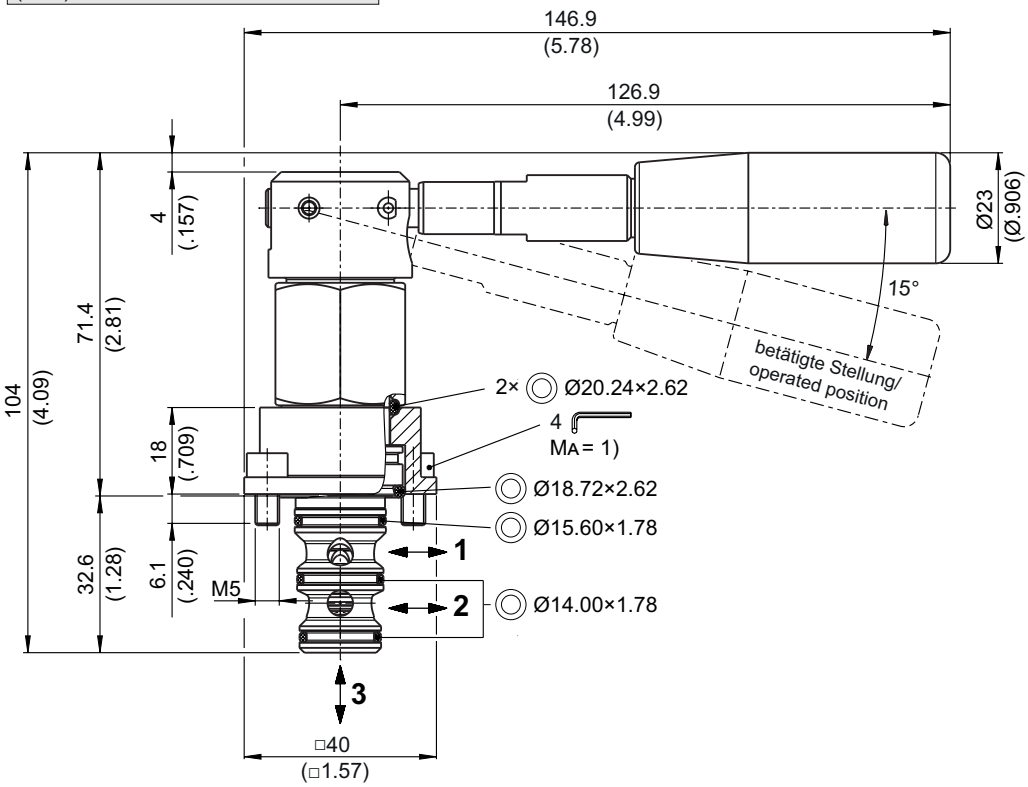

Installation information

ATTENTION!
Only qualified personnel with mechanical skills may carry out any maintenance work. Generally, the only work that should ever be undertaken is to check, and possibly replace, the seals. When changing seals, oil or grease the new seals thoroughly before fitting them.

NOTE!
1) When fitting the slip-in valves, use the specified tightening torque for the mounting screws. The value can be found in the chapter "Technical data".

Functional principle / Spool variants

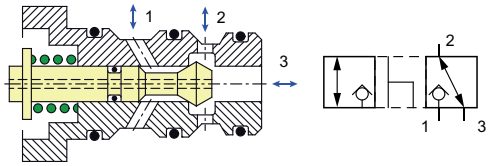

Ordering code

Ex. W1 U Q B 2

W1 = directional valve, poppet-type, direct acting
U = 3-way/2-position, negative spool, with hand lever detenable
X = 3-way/2-position, negative spool, with hand lever non-detenable
Q = NBR (nitril-butadien-rubber / BUNA) seals *(standard)*
S = FKM (fluorcarvon rubber / VITON) seals
(special seals - please consult BUCHER)
A…Q = standard model according to valid data sheet *(standard)*
Z…R = special model after consultation
1…9 = technical design no. (omit when ordering)

Related data sheets

Reference	Description
400-P-040011	Form tools
400-P-040111	Cavity AC
400-P-730121	Threaded port body GADA

info.ch@bucherhydraulics.com **www.bucherhydraulics.com**

© 2022 by Bucher Hydraulics AG Frutigen, 3714 Frutigen, Switzerland

All rights reserved.
Data is provided for the purpose of product description only, and must not be construed as warranted characteristics in the legal sense. The information does not relieve users from the duty of conducting their own evaluations and tests. Because the products are subject to continual improvement, we reserve the right to amend the product specifications contained in this catalogue.

BUCHER hydraulics
WWW.SUMY.IR

Directional valve 3-way/2-position

Q_{max} = 40 l/min, p_{max} = 315 bar
direct acting, poppet type, pneumatical operation
Type series: W1R_B...

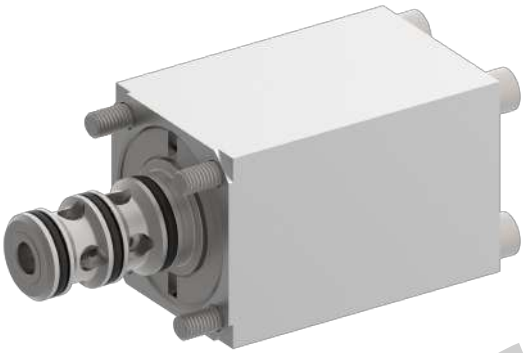

- Slip-in cartridge valve
- For cavity AC
- All external parts with zinc-nickel plating according to DIN EN ISO 19598
- Guided valve spool and poppet
- Control head is hard-anodized aluminium

Phase-Out

Description

The 3-way/2-position directional seat valves, series W1R..., are size 6, pneumatically operated, direct acting, pressure balanced, push-in valves. In the normal condition (non-operated), flow in port 1 is shut off without leakage. They are designed on the tried and tested principle of the guided poppet, and the guide spool has a seal. This valve type has an underlapped spool. In the crossover position, all connections are thus connected, i.e., there is a connection between ports 1, 2, and 3 during the valve's switching period. The pneumatic control head has a G 1/8" threaded port for the air feed. All external parts of cartridge are zinc-nickel plated, the aluminum control head is hard-anodized, and the valve is thus suitable for use in the harshest operating environments. These valves are predominantly used in certain mobile and industrial applications where leak-tight shut-off functions are crucially important. Examples are where loads, tensions, or clamping forces must be held without leakage. For self-assembly, please refer to the section related data sheets.

Symbol

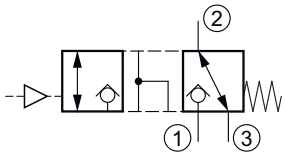

Technical data

General characteristics	Description, value, unit
Product status	Phase-Out
Function group	Directional valve
Function	3-way/2-position
Design	Slip-in cartridge valve
Controls	pneumatical operation
Characteristic	direct acting, poppet type
Transition/central position of spool/piston	zero or underlap/negative (open)
Construction size	NG 6
Mounting attitude	unrestricted
Weight	0.55 kg
Cavity acc. factory standard	For cavity AC
Tightening torque steel	5.2 Nm
Tightening torque aluminium	5.2 Nm
Tightening torque tolerance	± 5 %
Minimum ambient temperature	- 25 °C
Maximum ambient temperature	+ 80 °C
Surface protection	All external parts with zinc-nickel plating according to DIN EN ISO 19598
Sealing material	see ordering code
Seal kit order number	NBR: DS-387-N / FKM: DS-387-V

NOTE!
Pneumatic pilot pressure min. 6.5 bar / 90 psi

Hydraulic characteristics	Description, value, unit
Maximum operating pressure	315 bar
Maximum flow rate	40 l/min
Flow direction	see symbol
Hydraulic fluid	HL and HLP mineral oil according to DIN 51 524; other fluids on request!
Minimum fluid temperature	- 25 °C
Maximum fluid temperature	+ 80 °C
Viscosity range	10 ... 650 mm^2/s (cSt)
Recommended viscosity range	15 ... 250 mm^2/s (cSt)
Minimum fluid cleanliness (cleanlineless class according to ISO 4406:1999)	class 20/18/15
Pilot operating media	compressed air
Pilot pressure	min. 6.5 bar

Phase-Out

BUCHER hydraulics
WWW.SUMY.IR

Performance graphs

measured with oil viscosity 33.0 mm²/s (cSt)

p = f (Q) Performance limit

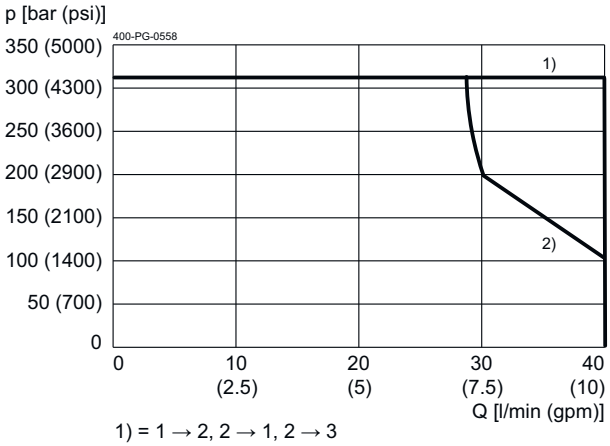

1) = 1 → 2, 2 → 1, 2 → 3
2) = 3 → 2

Δp = f (Q) Pressure drop-flow rate characteristic

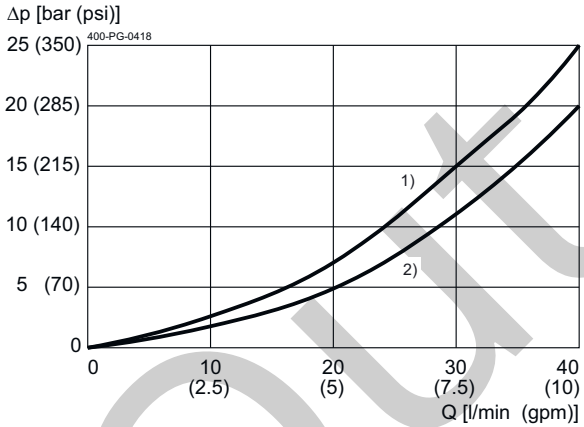

1) = 1 → 2; 2 → 1
2) = 2 → 3; 3 → 2

Dimensions and sectional view

Beispiel für die Masseinheit:
Example for the dimensional units:

0.79 = 0.79 mm millimeter
(.031) = 0.031" inch

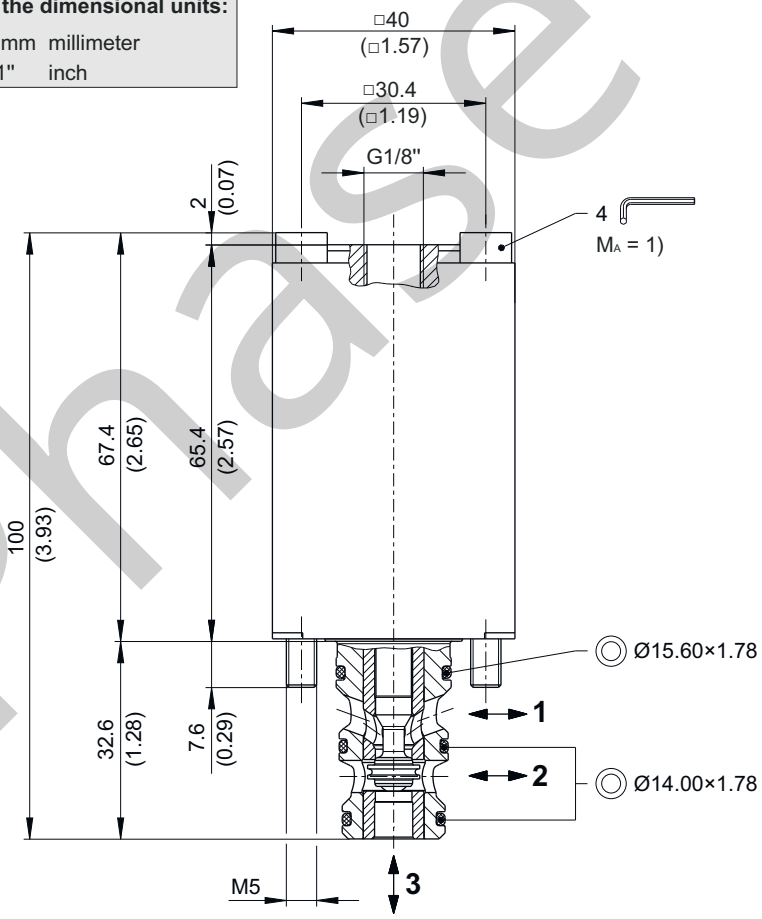

Phase-Out

Installation information

ATTENTION!
Only qualified personnel with mechanical skills may carry out any maintenance work. Generally, the only work that should ever be undertaken is to check, and possibly replace, the seals. When changing seals, oil or grease the new seals thoroughly before fitting them.

NOTE!
1) When fitting the slip-in valves, use the specified tightening torque for the mounting screws. The value can be found in the chapter "Technical data".

Functional principle / Spool variants

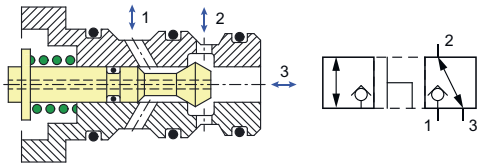

Ordering code

Ex. W1 R Q B 2

W1	= directional valve, poppet-type, direct acting
R	= 3-way/2-position, negative spool, pneumatical operation
Q	= NBR (nitril-butadien-rubber / BUNA) seals **(standard)**
S	= FKM (fluorocarbon rubber / VITON) seals *(special seals - please consult BUCHER)*
A…Q	= standard model according to valid data sheet **(standard)**
Z…R	= special model after consultation
1…9	= technical design no. (omit when ordering)

Related data sheets

Reference	Description
400-P-040011	Form tools
400-P-040111	Cavity AC

Phase-Out

info.ch@bucherhydraulics.com **www.bucherhydraulics.com**

© 2025 by Bucher Hydraulics AG Frutigen, 3714 Frutigen, Switzerland

All rights reserved.
Data is provided for the purpose of product description only, and must not be construed as warranted characteristics in the legal sense. The information does not relieve users from the duty of conducting their own evaluations and tests. Because the products are subject to continual improvement, we reserve the right to amend the product specifications contained in this catalogue.

BUCHER hydraulics
WWW.SUMY.IR

Directional valve 3-way/2-position

Q_{max} = 40 l/min, p_{max} = 315 bar
direct acting, poppet type, pneumatical operation
Type series: W1S_B...

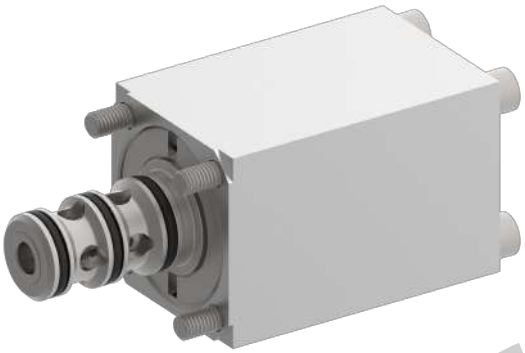

- Slip-in cartridge valve
- For cavity AC
- All external parts with zinc-nickel plating according to DIN EN ISO 19598
- Guided valve spool and poppet
- Control head is hard-anodized aluminium

Phase-Out

Description

The 3-way/2-position directional seat valves, series W1S..., are size 6, pneumatically operated, direct acting, pressure balanced, push-in valves. In the normal condition (non-operated), flow in port 1 is shut off without leakage. They are designed on the tried and tested principle of the guided poppet, and the guide spool has a seal. This valve type has an overlapped spool. In the crossover position, all connections are thus disconnected, i.e., there is no connection between ports 1, 2, and 3 during the valve's switching period, with the result that only a minimal loss of the flow/pressure occurs. This is a very important benefit in small-volume circuits, and in accumulator- and clamping systems. The pneumatic control head has a G 1/8" threaded port for the air feed. All external parts of cartridge are zinc-nickel plated, the aluminum control head is hard-anodized, and the valve is thus suitable for use in the harshest operating environments. These valves are predominantly used in certain mobile and industrial applications where leak-tight shut-off functions are crucially important. Examples are where loads, tensions, or clamping forces must be held without leakage. For self-assembly, please refer to the section related data sheets.

Symbol

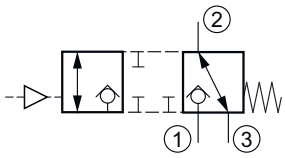

Technical data

General characteristics	Description, value, unit
Product status	Phase-Out
Function group	Directional valve
Function	3-way/2-position
Design	Slip-in cartridge valve
Controls	pneumatical operation
Characteristic	direct acting, poppet type
Transition/central position of spool/piston	zero or overlap/positive (closed)
Construction size	NG 6
Mounting attitude	unrestricted
Weight	0.55 kg
Cavity acc. factory standard	For cavity AC
Tightening torque steel	5.2 Nm
Tightening torque aluminium	5.2 Nm
Tightening torque tolerance	± 5 %
Minimum ambient temperature	- 25 °C
Maximum ambient temperature	+ 80 °C
Surface protection	All external parts with zinc-nickel plating according to DIN EN ISO 19598
Sealing material	see ordering code
Seal kit order number	NBR: DS-387-N / FKM: DS-387-V

NOTE!
Pneumatic pilot pressure min. 6.5 bar / 90 psi

Hydraulic characteristics	Description, value, unit
Maximum operating pressure	315 bar
Maximum flow rate	40 l/min
Flow direction	see symbol
Hydraulic fluid	HL and HLP mineral oil according to DIN 51 524; other fluids on request!
Minimum fluid temperature	- 25 °C
Maximum fluid temperature	+ 80 °C
Viscosity range	10 ... 650 mm^2/s (cSt)
Recommended viscosity range	15 ... 250 mm^2/s (cSt)
Minimum fluid cleanliness (cleanlineless class according to ISO 4406:1999)	class 20/18/15
Pilot operating media	compressed air
Pilot pressure	min. 6.5 bar

Phase-Out

BUCHER hydraulics
WWW.SUMY.IR

Performance graphs

measured with oil viscosity 33.0 mm²/s (cSt)

p = f (Q) Performance limit

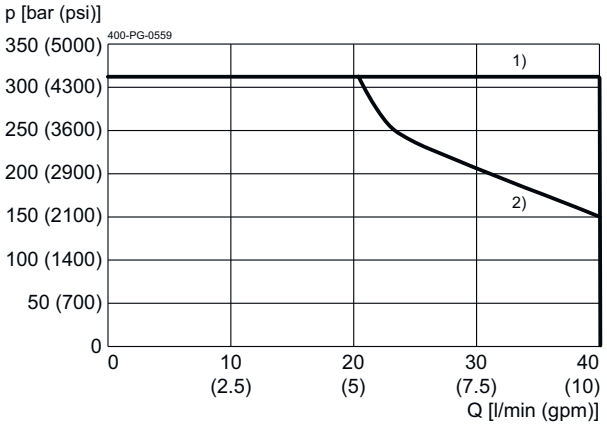

1) = 1 → 2, 2 → 1, 2 → 3
2) = 3 → 2

Δp = f (Q) Pressure drop-flow rate characteristic

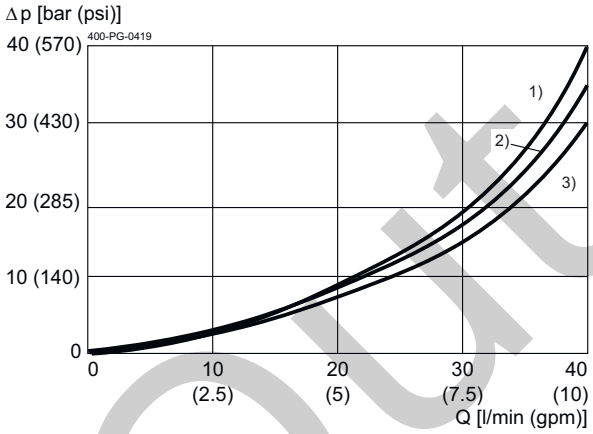

1) = 2 → 1; 2 → 3
2) = 1 → 2
3) = 3 → 2

Dimensions and sectional view

Beispiel für die Masseinheit:
Example for the dimensional units:

0.79	= 0.79 mm	millimeter
(.031)	= 0.031"	inch

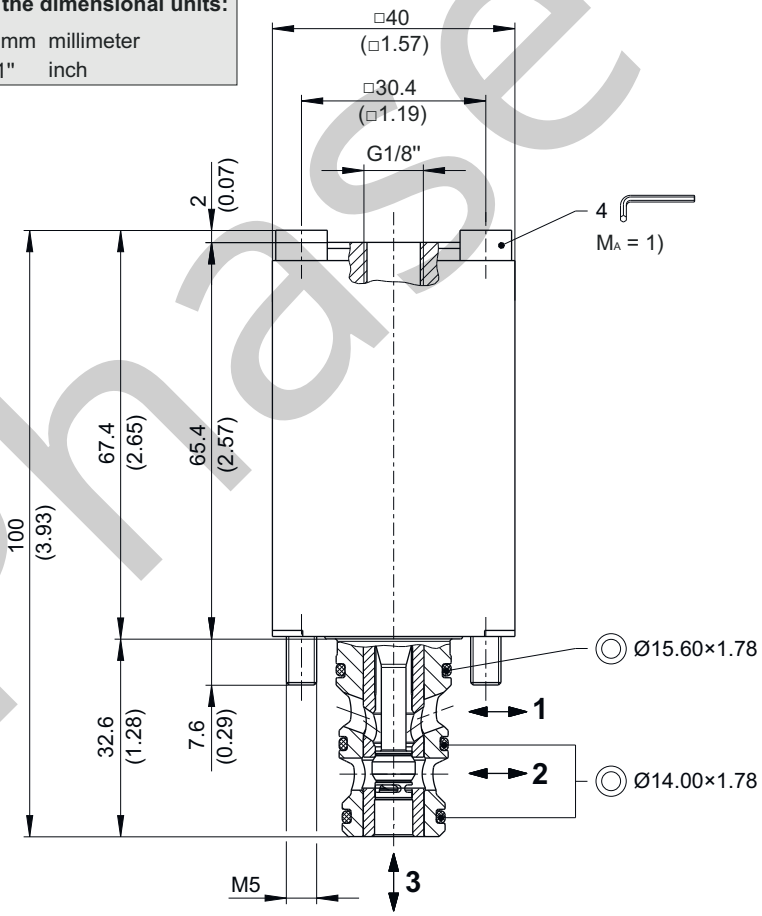

Phase-Out

Installation information

ATTENTION!
Only qualified personnel with mechanical skills may carry out any maintenance work. Generally, the only work that should ever be undertaken is to check, and possibly replace, the seals. When changing seals, oil or grease the new seals thoroughly before fitting them.

NOTE!
1) When fitting the slip-in valves, use the specified tightening torque for the mounting screws. The value can be found in the chapter "Technical data".

Functional principle / Spool variants

The “overlapped spool” model features a closed cross-over characteristic i.e. during the valve's switching period, there is no connection between ports 3, 2, and 1 and therefore only a minimal loss of flow/pressure occurs. This is a very important benefit in small-volume circuits, and in accumulator- and clamping systems.

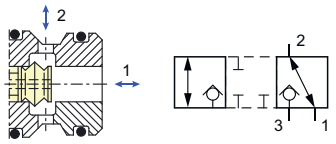

Ordering code

Ex. W1 S Q B 2

W1 = directional valve, poppet-type, direct acting
S = 3-way/2-position, positive spool, pneumatical operation
Q = NBR (nitril-butadien-rubber / BUNA) seals **(standard)**
S = FKM (fluorocarbon rubber / VITON) seals
(special seals - please consult BUCHER)
A…Q = standard model according to valid data sheet **(standard)**
Z…R = special model after consultation
1…9 = technical design no. (omit when ordering)

Related data sheets

Reference	Description
400-P-040011	Form tools
400-P-040111	Cavity AC

info.ch@bucherhydraulics.com **www.bucherhydraulics.com**

© 2025 by Bucher Hydraulics AG Frutigen, 3714 Frutigen, Switzerland

All rights reserved.
Data is provided for the purpose of product description only, and must not be construed as warranted characteristics in the legal sense. The information does not relieve users from the duty of conducting their own evaluations and tests. Because the products are subject to continual improvement, we reserve the right to amend the product specifications contained in this catalogue.

Phase-Out

BUCHER hydraulics

WWW.SUMY.IR

Directional valve 4-way/2-position

Q_{max} = 30 l/min, p_{max} = 315 bar
Direct acting, poppet type, switching solenoid
Type series: WS42GNA-8...

- Screw-in cartridge valve for cavity AT/C1040
- All external parts with zinc-nickel plating according to DIN EN ISO 19598
- Installation in threaded port body type GAT-12
- Fits common cavity according to ISO
- Closed in the non-operated condition
- Leak-free shut-off function
- Compact construction
- High pressure wet-armature solenoids
- Optional with manual override
- Various plug-connector systems and voltages are available
- The slip-on coil can be rotated, and it can be replaced without opening the hydraulic envelope

Symbol

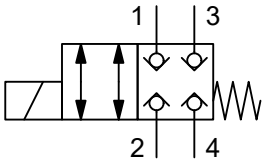

Description

The 4-way/2-position solenoid-operated directional valves, series WS42GNA-8..., are size 8 / SAE 10, screw-in valves with a 7/8-14 UNF mounting thread. They are designed on the poppet/seat principle, and are therefore virtually leak-free. All external parts of the cartridge are zinc-nickel plated and are thus suitable for use in the harshest operating environments. The slip-on coils can be replaced without opening the hydraulic envelope and can be positioned at any angle through 360°. These valves are primarily used as pilot valves in certain mobile and industrial applications where leak-tight shut-off functions are crucially important. Examples are where loads, tensions, or clamping forces must be held without leakage. For self-assembly, please refer to the section realted datasheets.

Technical data

General characteristics	Description, value, unit
Function group	directional valve
Function	4-way/2-position
Design	screw-in cartridge valve
Controls	switching solenoid
Characteristic	direct acting, poppet type
MTTFd value	150 years
Construction size	NG 08 / SAE 10
Thread size	7/8-14 UNF-2A
Mounting attitude	unrestricted
Weight	0.74 kg
Cavity acc. ISO	fits into ISO 17209: 7/8-04-0-13
Cavity acc. NFPA	fits into NFPA/T3.5.50: 0.875-04-0-09
Cavity acc. factory standard	AT/C1040
Tightening torque steel	80 Nm
Tightening torque aluminium	80 Nm
Tightening torque tolerance	± 10 %
Minimum ambient temperature	- 30 °C
Maximum ambient temperature	+ 50 °C
Surface protection	all external parts with zinc-nickel plating according to DIN EN ISO 19598
Sealing material	see ordering code
Seal kit order number	NBR: DS-436-N / FKM-DS-436-V

Hydraulic characteristics	Description, value, unit
Maximum operating pressure	315 bar
Maximum flow rate	30 l/min
Flow direction	see symbol
Hydraulic fluid	HL and HLP mineral oil according to DIN 51 524; other fluids on request!
Minimum fluid temperature	- 30 °C
Maximum fluid temperature	+ 80 °C
Viscosity range	10 ... 500 mm^2/s (cSt)
Recommended viscosity range	15 ... 250 mm^2/s (cSt)
Minimum fluid cleanliness (cleanliness class according to ISO 4406:1999)	class 20/18/15

Electric characteristics	Description, value, unit
Actuator type	solenoid coil
Solenoid coils type	D45/207
Supply voltage DC	12 V DC 24 V DC
Supply voltage AC	115/230 (50 ... 60 Hz) V AC
Supply voltage tolerance	± 10 %
Nominal power consumption	VDC = 30...32 W / VAC = 31...32 W
Switching time	Switching time measured at: UN; Δp = 250 bar; Q = 24 l/min; TAmbient = 20 °C; ϑ = 46 mm2/s / 250 ms (energizing) 50 ms (de-energizing)
Relative duty cycle	100 %
Electrical connection coil	several connection types available, see ordering code
Protection class solenoid coil to ISO 20 653 / EN 60 529	IP 65 / IP 67 / IP 69K, see Ordering code (with appropriate mating connector and proper fitting and sealing)

NOTE!
The switching time is in practice strongly influenced by the dwell period under pressure, flow rate, pressure, and oil viscosity, and may differ from the specified values.

Performance graphs

measured with oil viscosity 33.0 mm²/s (cSt), coil at steady-state temperature and 10 % undervoltage

p = f (Q) Performance limit

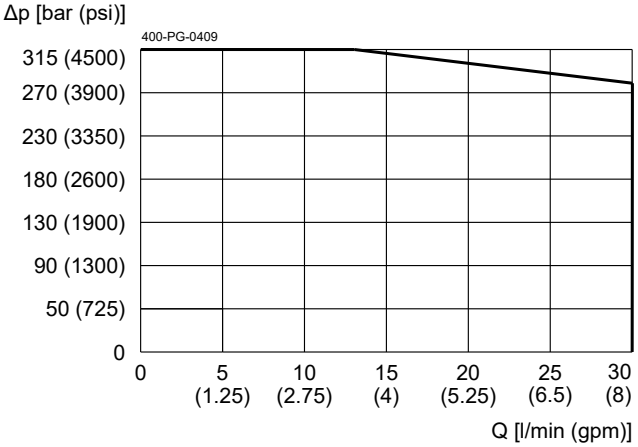

Δp = f (Q) Pressure drop-flow rate characteristic

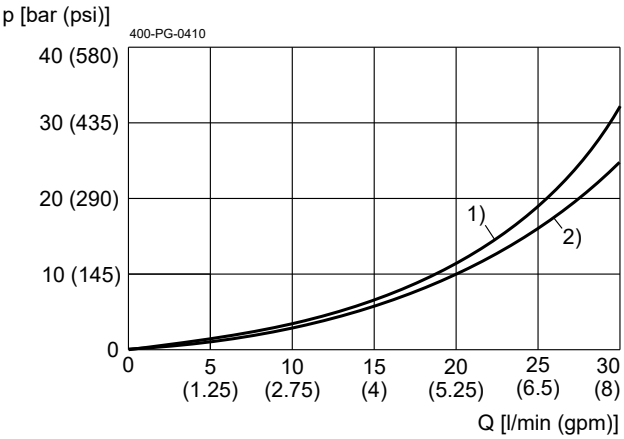

1) = 1→2 / 2→1
2) = 3→4 / 4→3

Installation

Beispiel für die Masseinheit:
Example for the dimensional units:

0.79 = 0.79 mm millimeter
(.031) = 0.031'' inch

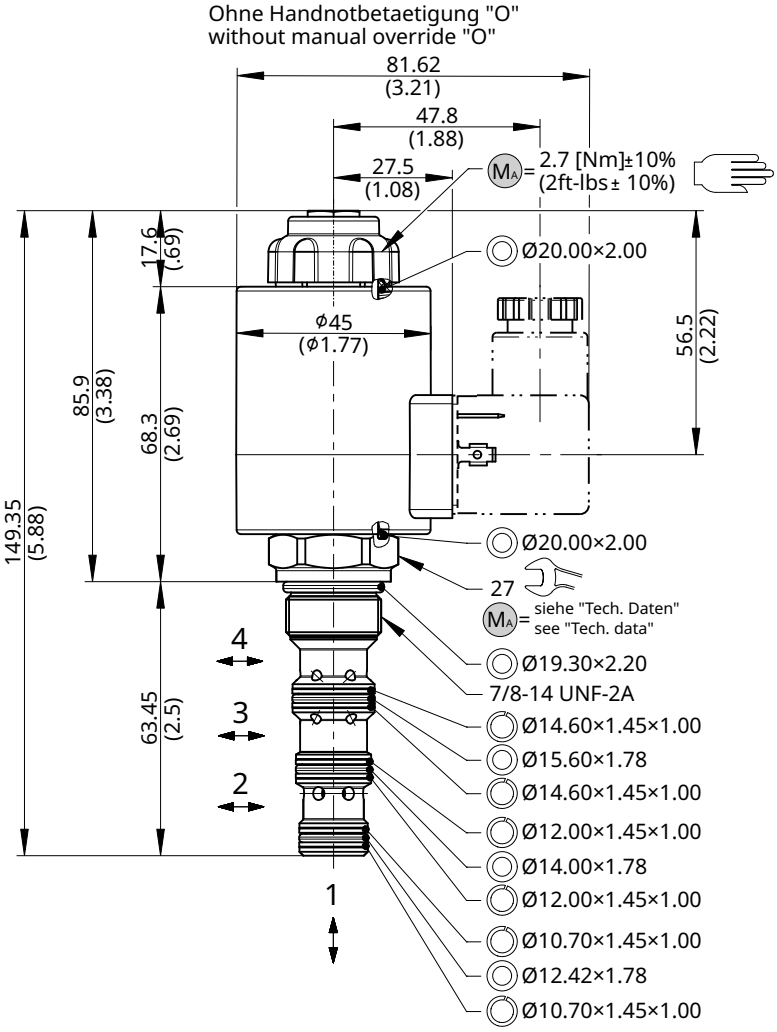

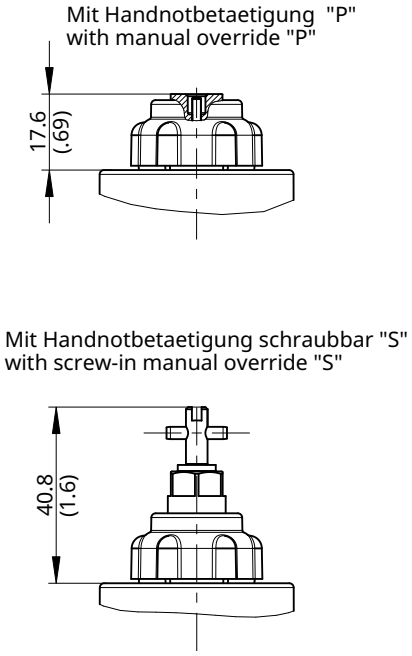

ATTENTION!
Only qualified personnel with mechanical skills may carry out the following work:

- installation and, if necessary, adjustment.
- replacement of slip-on solenoid coil, if present (solenoid coil type; see "Technical Data").
- inspection and, if necessary, replacement of the seals shown in the illustration. New seals must only be installed after being oiled or greased (seal kit; see "Technical Data").

IMPORTANT!

- Observe tightening torques MA .

Ordering code

Ex. W S 42 G N A - 8 O N - 4 24 D _

W	=	directional valve
S	=	seat valve, direct acting
42	=	4-way/2-position
G	=	e-energized closed
N	=	electrically operated, D45/207, 30...32 W
A ... Q	=	standard model according to valid data sheet
Z ... R	=	special model (on request)
8	=	nominal size 8 / SAE 10
O	=	without manual override **(standard)**
P	=	with manual override
S	=	with screwable manual override
N	=	NBR (nitril-butadien-rubber / BUNA) seals **(standard)**
V	=	FKM (fluorocarbon rubber / VITON) seals (special seals on request)
1 ... 9	=	technical design no. (omit by ordering)
...	=	voltage e.g. 24 (24 V)
D	=	current DC
A	=	current AC

(blank)	=	DIN EN 175301-803 connection	3-pole 2 P+E **(standard)**	(IP 65)	with mating plug
T	=	DIN EN 175301-803 connection	3-pole 2 P+E, with protection diode	(IP 65)	with mating plug
M100	=	DIN EN 175301-803 connection	3-pole 2 P+E	(IP 65)	mating plug not supplied
J	=	Junior Timer plug connection	2-pole radial	(IP 65)	mating plug not supplied
JT	=	Junior Timer plug connection	2-pole radial, with protection diode	(IP 65)	mating plug not supplied
I	=	Junior Timer plug connection	2-polig axial	(IP 65)	mating plug not supplied
IT	=	Junior Timer plug connection	2-polig axial, with protection diode	(IP 65)	mating plug not supplied
D	=	Deutsch plug connection DT04-2P	2-pole 45°	(IP 67/69K)	mating plug not supplied
DT	=	Deutsch plug connection DT04-2P	2-pole 45°, with protection diode	(IP 67/69K)	mating plug not supplied
		other plug-variants, please consult BUCHER.			

IMPORTANT!
Not every combination of voltage values, current type and plug connections vailable.

Related data sheets

Reference	Description
400-P-040011	form tools
400-P-040301	cavity AT/C1040
400-P-120120	solenoid coil D45/207
400-P-738131	threaded port body GAT-12-...

info.ch@bucherhydraulics.com **www.bucherhydraulics.com**

© 2026 by Bucher Hydraulics AG Frutigen, 3714 Frutigen, Switzerland

All rights reserved.
Data is provided for the purpose of product description only, and must not be construed as warranted characteristics in the legal sense. The information does not relieve users from the duty of conducting their own evaluations and tests. Because the products are subject to continual improvement, we reserve the right to amend the product specifications contained in this catalogue.

4/3 Proportional Directional Valve, Size SAE 10

Q_{max} = 8.0 gpm [30 l/min], p_{max} = 4000 psi [280 bar]
Direct acting, sliding-spool design, with solenoid operation
Series PDFC-10…

- Compact construction for cavity type C1040 – 7/8-14 UNF
- Operated by a proportional high pressure wet-armature solenoid
- Minimum current threshold/ dead band (position b) is factory set for better consistency
- Manual over-ride optionally available, detented in neutral position
- Excellent reproducibility and repeatability, and low hysteresis
- All exposed parts with zinc-nickel plating
- The slip-on coil can be rotated, and it can be replaced without opening the hydraulic envelope
- Various plug-connector systems and voltages are available
- Can be fitted in a line-mounting body

1 Description

Series PDFC-10… proportional directional valves are direct acting screw-in cartridges with a sliding spool design and a 7/8-14 UNF mounting thread. In the neutral position, port 3 is closed and depending on the spool type, ports 2 and 4 are connected to tank (1) (spool configuration M) or ports 1, 2 and 4 are all blocked (spool configuration L). The version with the M spool is used in motor control circuits where free-wheeling in the neutral position is required. The L configuration is the version to use for cylinder applications. These cartridges are particularly suitable for precise and controlled lifting and lowering movements and can also be used for reliable operation in mobile and industrial applications. Best controllability is achieved when using the valve with a bypass pressure compensator to control pressure drop through the valve. Using the valve without pressure compensator is not recommended because higher pressure drops cause the flow to be more restricted (see performance graph). The proportional directional valves is optionally equipped with a manual over-ride which is detented in the neutral position. To unlatch the detent mechanism, the button on the back can be pushed. That allows shifting the valve in both directions. Pushing the knob shifts the valve to position (a) (3→2 and 4→1) and pulling shifts it to position (b) (3→4 and 2→1). All external parts of the cartridge are zinc plated and chromited (CrVI-free). The slip-on coils can be replaced without opening the hydraulic envelope and can be positioned at any angle through 360°. If you intend to manufacture your own cavities or are designing a line-mounting installation, please refer to the section “Related data sheets”.

2 Symbol

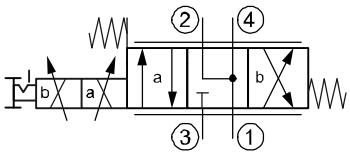

PDFC-10-…-4M-M…

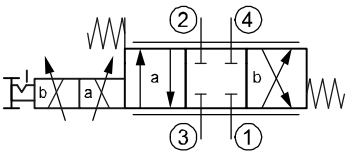

PDFC-10-…-4L-M…

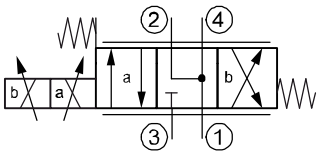

PDFC-10-…-4M-0…

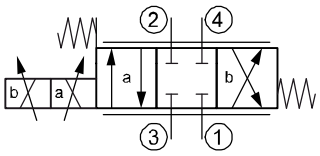

PDFC-10-…-4L-0…

3 Technical data

General characteristics	Description, value, unit	
Designation	4/3 proportional directional valve	
Design	sliding-spool design, direct acting, with solenoid operation	
Mounting method	screw-in cartridge 7/8-14 UNF	
Tightening torque	40…45 ft-lbs	[54…61 Nm]
Size	size SAE 10, cavity type C1040	
Weight	1.65 lbs	[0.75 kg]
Mounting attitude	unrestricted (preferably vertical, coil down)	
Ambient temperature range	-15 °F … +125 °F	[-25 °C … +50 °C]

Hydraulic characteristics		Description, value, unit	
Maximum operating pressure	- ports 2, 3, 4 - port 1	4000 psi 2000 psi higher pressure, please consult BUCHER	[280 bar] [140 bar]
Maximum flow rate	- port 3 → 4 and 2 → 1 - port 3 → 2 and 4 → 1	7.0 gpm at Δp 140 psi 6.2 gpm at Δp 140 psi at 100% duty cycle	[26 l/min at Δp 10 bar] [24 l/min at Δp 10 bar]
Leakage flow rate	(port to port)	15 inch^3 at 3000 psi	[245 ml/min at 210 bar]
Hydraulic fluid		HL and HLP mineral oil to DIN 51 524; for other fluids, please contact BUCHER	
Hydraulic fluid temperature range		-15 °F … +160 °F	[-25 °C … +70 °C]
Viscosity range		15…380 mm^2/s (cSt), recommended 20...130 mm^2/s (cSt)	
Minimum fluid cleanliness Cleanliness class to ISO 4406 : 1999		class 18/16/13	

Electrical characteristics		Description, value, unit
Supply voltage		12 V DC, 24 V DC
Control current		12 V = 0…1400 mA, 24 V = 0…750 mA (100% duty cycle) 12 V = 0…1600 mA, 24 V = 0…880 mA (50% duty cycle)
Power consumption at max. control current		max. 19 W
Coil resistance R	- cold value at 20 °C - max. warm value	12 V = 5.8 Ω / 24 V = 20.9 Ω 12 V = 9.1 Ω / 24 V = 32.7 Ω
Recommended PWM frequency (dither)		200 Hz
Hysteresis with PWM		2…5 % I_N
Reversal error with PWM		2…5 % I_N
Sensitivity with PWM		< 1.5 % I_N
Reproducibility with PWM		< 3 % p_N
Relative duty cycle		100 % / 50 %
Protection class to ISO 20 653 / EN 60 529		IP 65 / IP 67 / IP 69K, see “Ordering code” (with appropriate mating connector and proper fitting and sealing)
Electrical connection		3-pin square plug to ISO 4400 / DIN 43 650 (standard) for other connectors, see “Ordering code”

4 Performance graphs

Q = f (I; Δp) Flow rate adjustment characteristic 4M

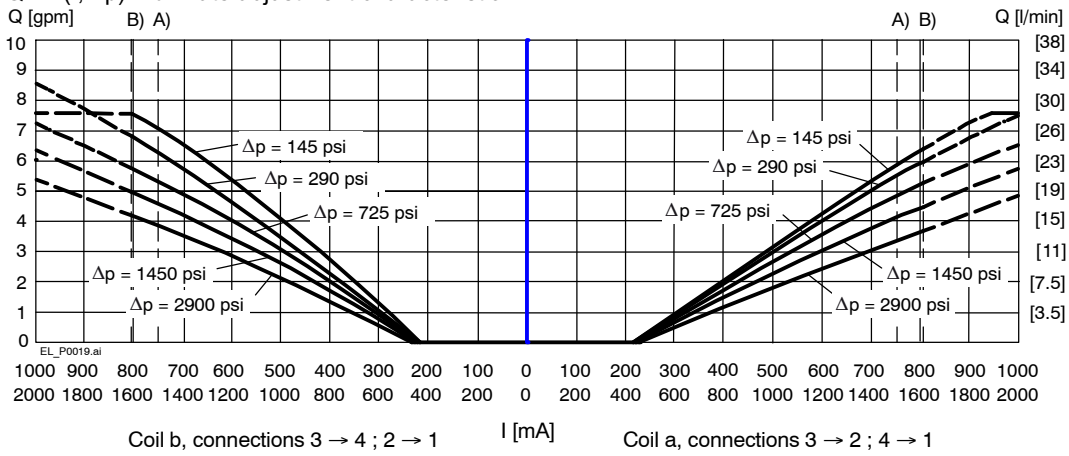

A) 100% duty cycle
B) 50% duty cycle
--- depending on coil temperature, solenoid may draw a voltage higher than the nominal voltage

Q = f (I; Δp) Flow rate adjustment characteristic 4L

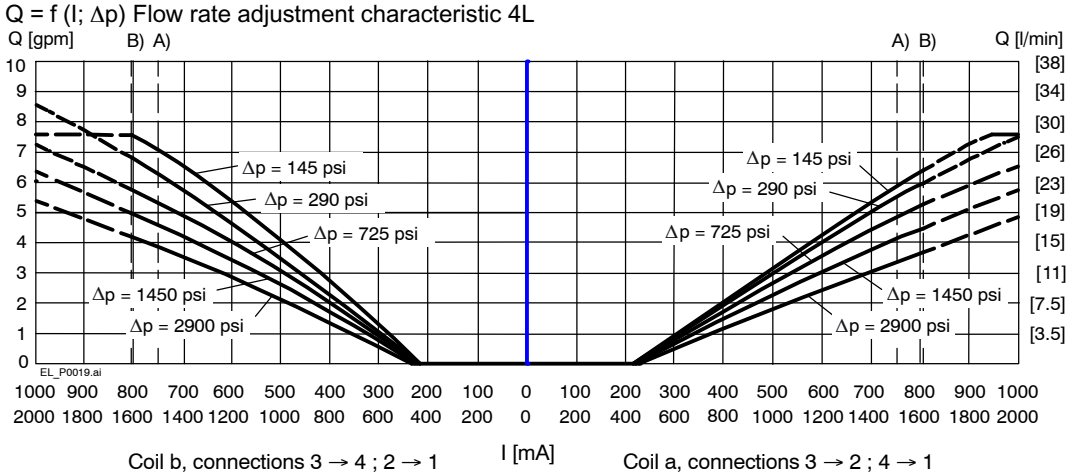

A) 100% duty cycle
B) 50% duty cycle
--- depending on coil temperature, solenoid may draw a voltage higher than the nominal voltage

Δp = f (Q) Pressure drop - Flow rate characteristic 4M

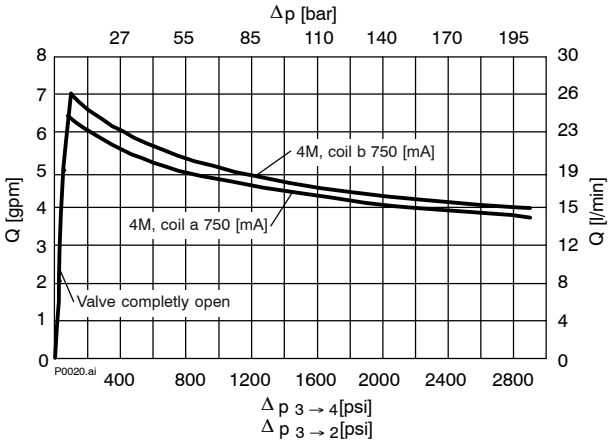

Δp = f (Q) Pressure drop - Flow rate characteristic 4L

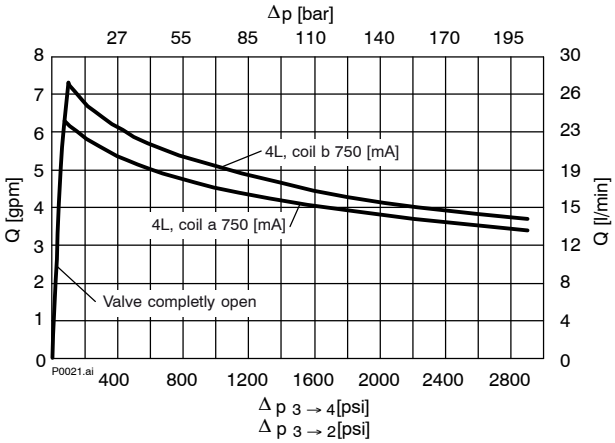

5 Dimensions & sectional view

4/3 proportional directional valve

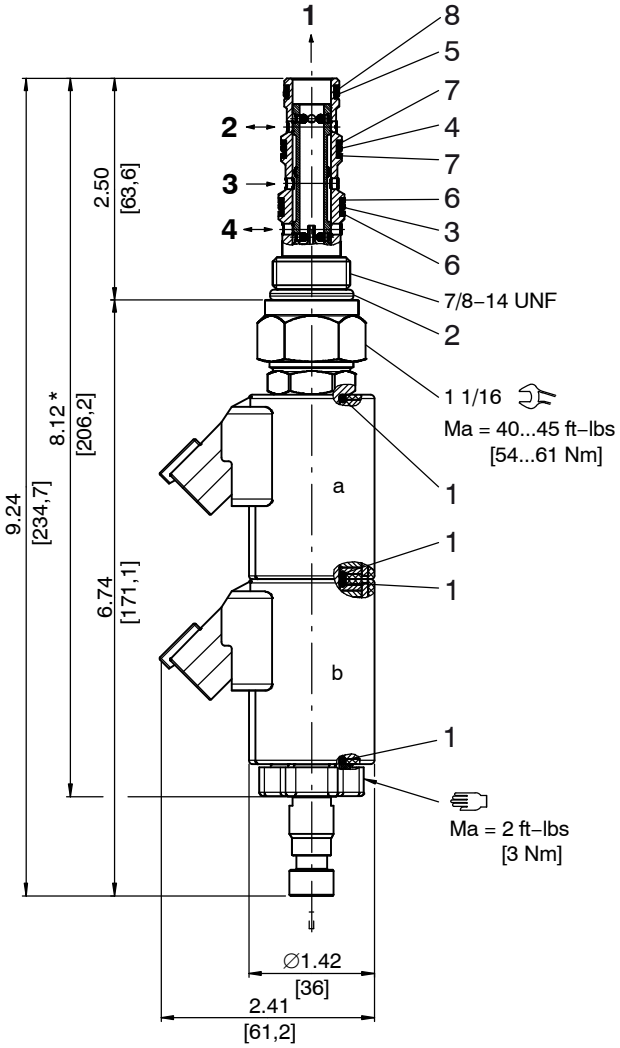

* overall length without manual over-ride

1. Push button to unlatch manual over-ride

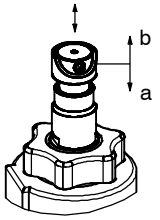

2. Push or pull on whole handle to shift valve to position a or b

Seal kit

Item	Qty.	Description		
1	4	O-ring		16 x 2
2	1	O-ring	no. 910	∅ 0.755 x 0.097 [19,18 x 2,46]
3	1	O-ring	no. 016	∅ 0.614 x 0.070 [15,60 x 1,78]
4	1	O-ring	no. 015	∅ 0.551 x 0.070 [14,00 x 1,78]
5	1	O-ring	no. 014	∅ 0.489 x 0.070 [12,42 x 1,78]
6	2	Backup ring		∅ .634 x .052 x .047 [16,10 x 1,32 x 1,19]
7	2	Backup ring		∅ .572 x .052 x .047 [14,53 x 1,32 x 1,19]
8	1	Backup ring		∅ .510 x .052 x .047 [12,95 x 1,32 x 1,19]

IMPORTANT!
Item no. 5207300112 = Seal kit NBR (Buna)
Item no. 5207300113 = Seal kit FKM (Viton)

6 Installation information

ATTENTION!
Only qualified personnel with mechanical skills may carry out any maintenance work. Generally, the only work that should ever be undertaken is to check, and possibly replace, the seals. When changing seals, oil or grease the new seals thoroughly before fitting them.

IMPORTANT!
When fitting the valves, use the specified tightening torque for the mounting bolts. No adjustments are necessary, since the cartridges are set in the factory.

7 Ordering code

PDFC - 10 - N - 4M - A - M - 0 - 24 D _

PDFC	=	proportional directional valve
10	=	nominal size SAE 10
N	=	NBR (Nitrile) seals (**standard**)
V	=	FKM (Viton) seals (special seals - please consult BUCHER)
4L	=	cylinder spool, all ports closed in neutral
4M	=	motor spool, 2 and 4 connected to tank in neutral
A	=	factory set min current threshold at position b
M	=	with manual over-ride
0	=	without manual over-ride
0	=	cartridge only
02BA	=	line-mounting body G1/4 BSPP aluminum
02BS	=	line-mounting body G1/4 BSPP steel
03BA	=	line-mounting body G3/8 BSPP aluminum
03BS	=	line-mounting body G3/8 BSPP steel
06TA	=	line-mounting body SAE-#6 aluminum
06TS	=	line-mounting body SAE-#6 steel
08TA	=	line-mounting body SAE-#8 aluminum
08TS	=	line-mounting body SAE-#8 steel
...	=	voltage e.g. **24** (24 V)
D	=	current DC
(blank)	=	ISO 4400 / DIN 43 650 mating plug (**standard, IP 65**)
M100	=	without mating DIN plug
C	=	Kostal plug connection (IP 65)
JT	=	Junior Timer radial plug connection (with protection diode, IP65)
IT	=	Junior Timer axial plug connection (with protection diode, IP65)
D	=	Deutsch plug connection DT04-2P (IP 67/69K)
DT	=	Deutsch plug connection DT04-2P (with protection diode, IP 67/69K)
S	=	AMP Superseal 1.5 (IP 67) / Metri-Pack 150 (IP 65)
F	=	flying leads (500 mm)

mating plug not supplied

8 Related data sheets

Reference	(Old no.)	Description
520-P-000050		The form-tool hire programme
520-P-000420	(0-042.0)	Cavity Type C1040
520-P-000421	(0-042.1)	Line-mounting body, 10 Series – 4-way

info.el@bucherhydraulics.com www.bucherhydraulics.com/commoncavity

© 2015 by Bucher Hydraulics, Inc., 2545 Northwest Parkway, Elgin, Illinois 60124, USA
All rights reserved.
Data is provided for the purpose of product description only, and must not be construed as warranted characteristics in the legal sense. The information does not relieve users from the duty of conducting their own evaluations and tests. Because the products are subject to continual improvement, we reserve the right to amend the product specifications contained in this catalogue.

Classification: 430.300.-.305.310.310.300.300

BUCHER hydraulics
WWW.SUMY.IR

General information
Cavity

Type series: DJ

Dimensions and sectional view

Beispiel für die Masseinheit:
Example for the dimensional units:
0.79 = 0.79 mm millimeter

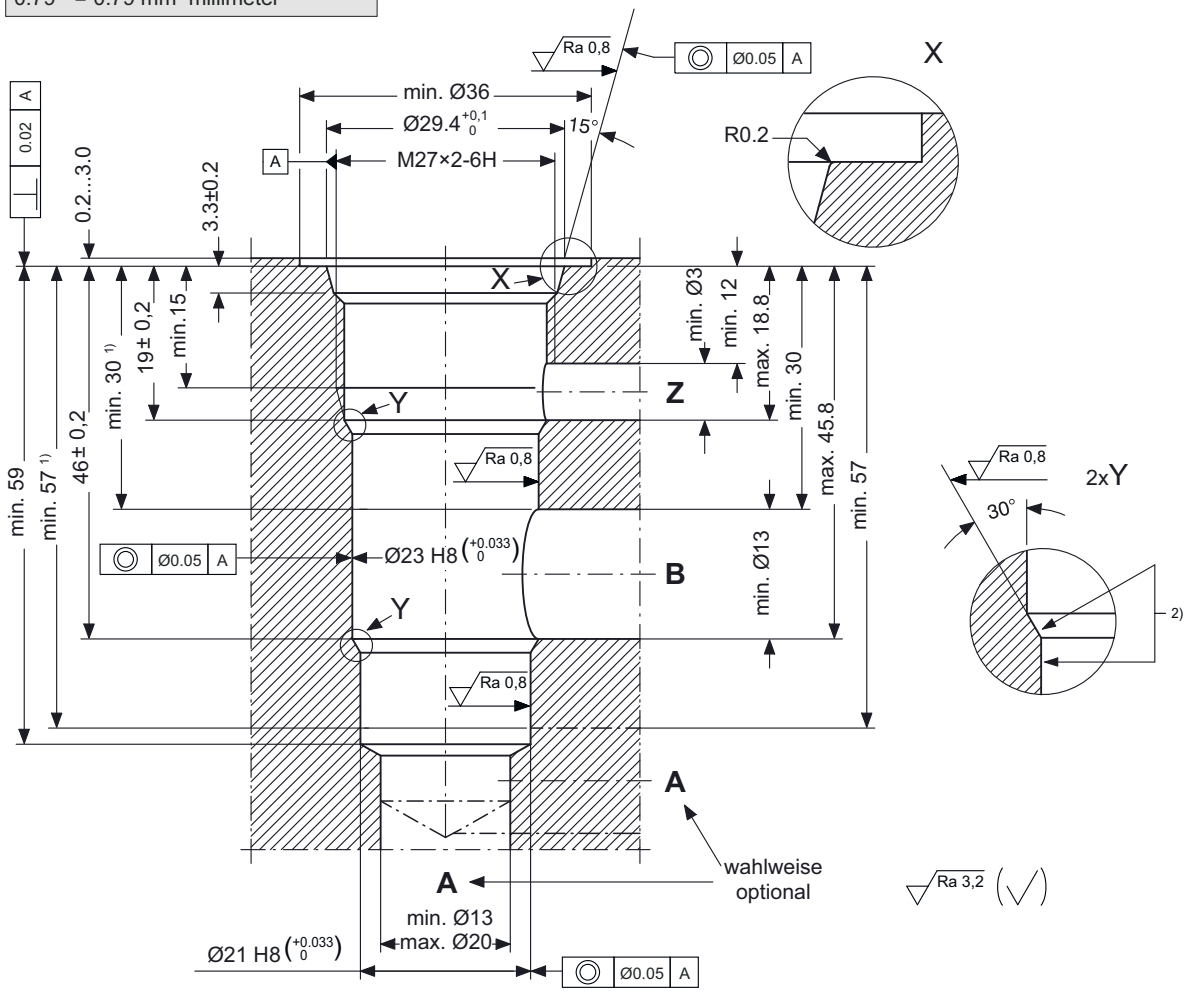

HINWEIS!
NOTE!

1) Passungstiefe
Minimum depth of specified diametral tolerance

2) Der Gewindeauslauf darf die Ringfläche und Ø23 H8 nicht verletzen.
The thread runout must not damage the ring surface or the Ø23 H8.

WWW.SUMY.IR

Installation information

ATTENTION!
You must maintain the specified positional and diametral tolerances. To ensure trouble-free operation of the screw-in cartridges, we strongly recommend that pilot drilling, boring, reaming and cavity thread-cutting are always performed in one setup.

NOTE!
Cavity type to factory standard.

NOTE!
We offer form tool sets for sale or hire. See data sheet 400-P-040011 for further information.

info.ch@bucherhydraulics.com **www.bucherhydraulics.com**

© 2025 by Bucher Hydraulics AG Frutigen, 3714 Frutigen, Switzerland

All rights reserved.
Data is provided for the purpose of product description only, and must not be construed as warranted characteristics in the legal sense. The information does not relieve users from the duty of conducting their own evaluations and tests. Because the products are subject to continual improvement, we reserve the right to amend the product specifications contained in this catalogue.

2/2 Logic Cartridge Valve, Size 10

Q_{max} = 150 l/min, p_{max} = 420 bar
Active Control, Seated Design
Series WL22SD…

- Active control
- Area ratio 2 : 1
- High flow rates with low Δp
- Seat-valve shut-off from A → B and B → A
- No pilot oil consumption at Z
- With or without seal on the seated valve spool
- Various opening pressures
- With integral orifice for pilot port
- All external parts zinc plated, chromited (CrVI-free)
- Can be fitted in a line-mounting body

9 Description

Series WL22SD... actively controlled 2/2 logic valves are size 10, high performance screw-in cartridges with an M27 x 2 mounting thread. The conical-seat design ensures that the cartridges are leak-tight from A → B and from B → A. When the same pressure exists at ports A, B and Z, the valve spool is held in its closed position by the ≥ 2 bar compression spring. The A → B and B → A connection is opened or closed by relieving or pressurising the pilot port Z, bearing in mind the corresponding area- and pressure-ratios. 2/2 logic cartridge valves can be used in both mobile and industrial applications. All external parts are zinc plated and chromited (CrVI-free) and are thus suitable for use in the harshest operating environments. If you intend to manufacture your own cavities or are designing a line-mounting installation, please refer to the section ”Related data sheets”.

10 Symbol

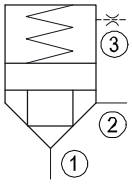

WL22SD …

11 Technical data

General characteristics	Description, value, unit
Designation	2/2 logic cartridge valve
Design	actively controlled, conical-seat type
Mounting method	screw-in cartridge M27 x 2
Tightening torque	150 Nm ± 10 %
Size	nominal 10 mm, cavity type DJ
Weight	0.21 kg
Mounting attitude	unrestricted
Ambient temperature range	-25 °C … +80 °C

WWW.SUMY.IR

General characteristics	Description, value, unit
Flow direction	A → B / B → A, see symbol
$MTTF_D$ values	150 years, see data sheet 400-P-010101-en

Hydraulic characteristics	Description, value, unit
Maximum operating pressure	420 bar
Maximum flow rate	150 l/min
Pressure drop	Δp < 5 bar at 100 l/min
Opening pressure: - standard - optional	2.0 bar 0.4 [1] / 1.0 [1] / 3.0 / 6.0 / 7.5 / 13 bar
Hydraulic fluid	HL and HLP hydraulic oils to DIN 51 524; for other fluids, please consult Bucher
Hydraulic fluid temperature range	-25 °C … +80 °C
Viscosity range	10 … 650 mm^2/s (cSt), recommended 15...250 mm^2/s (cSt)
Minimum fluid cleanliness level Cleanliness class to ISO 4406: 1999	class 20/18/15

[1] only recommended for use when the seated valve spool is not fitted with a seal.

12 Performance graphs

measured with oil viscosity 33 mm^2/s (cSt)

Δp = f (Q) Pressure drop - Flow rate characteristic

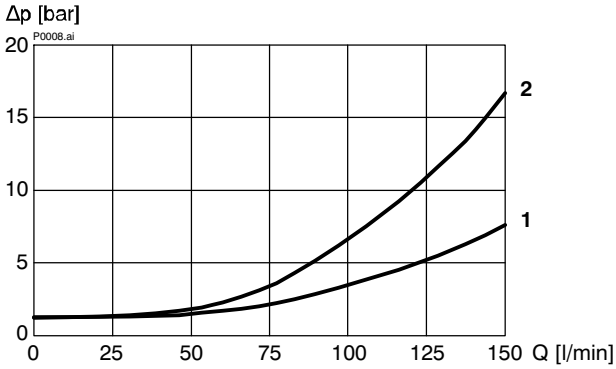

1 = cavity type DJ with annular groove
2 = cavity type DJ without annular groove

Attention:
The Δp characteristic is valid when the load pressure in the A → B / B → A connection is higher than the opening pressure. If the load pressure is lower than the opening pressure, the load pressure must first rise to overcome the opening pressure before flow can occur.

13 Dimensions, sectional view

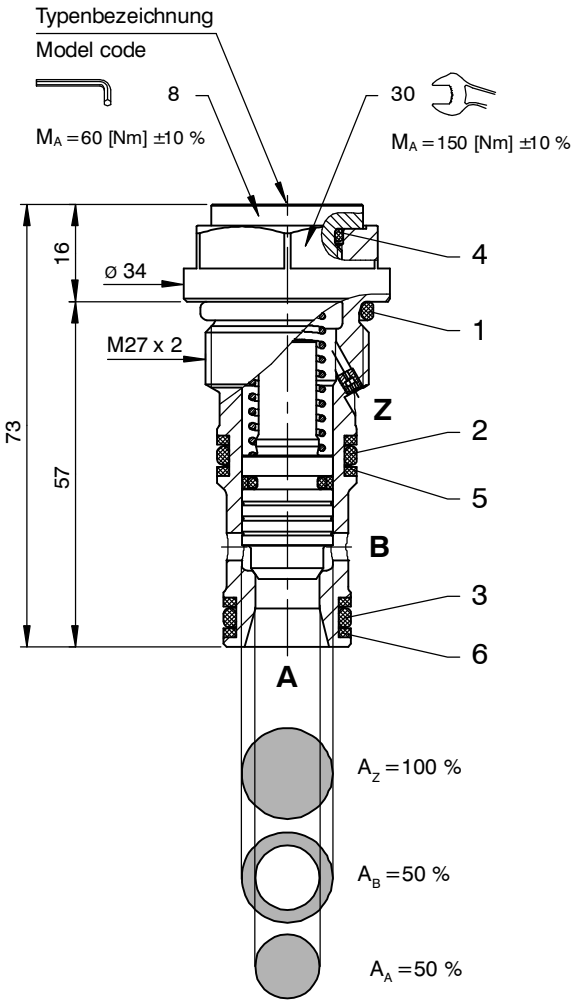

14 Installation information

Important:
No adjustments are necessary, since the cartridges are set in the factory.

Attention:
Only qualified personnel with mechanical skills may carry out any maintenance work. Generally, the only work that should ever be needed is to check and possibly replace the seals. When changing seals, oil or grease the new seals thoroughly before fitting them.

NBR seal kit no. DS-296-N [1)]

Item	Qty.	Description
1	1	O-ring No. 119 ∅ 23.47 x 2.62 N90
2	1	O-ring No. 116 ∅ 18.72 x 2.62 N90
3	1	O-ring No. 114 ∅ 15.54 x 2.62 N90
4	1	O-ring No. 016 ∅ 15.60 x 1.78 N90
5	2	Backup ring ∅ 17.1 x 2.0 x 1.4 FI0751
6	2	Backup ring ∅ 15.3 x 2.0 x 1.4 FI0751

IMPORTANT!
1) Seal kit with FKM (Viton) seals, no. DS-296-V

15 Area- and pressure-ratios

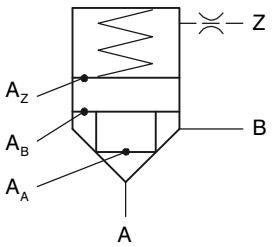

Area A_Z : Area A_A = 2 : 1
Area A_Z : Area A_B = 2 : 1
Area A_A : Area A_B = 1 : 1

16 Adjuster types (optional)

Type **"E" adjuster** (WL22S.E2D...)

Important
Can be used to limit the opening stroke, for example, or to block the valve spool in the closed position.

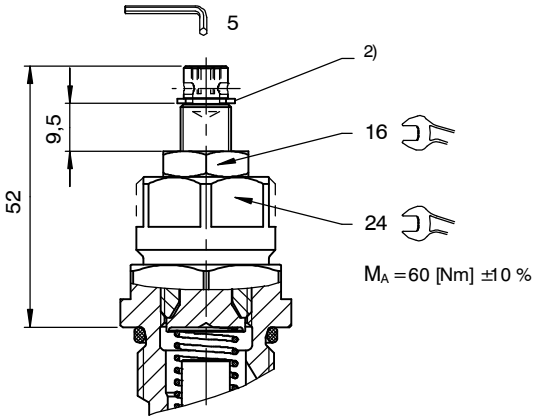

"E" adjuster with **"P" tamper-proof cap** (WL22S.P2D…)

Important
Valve settings can be sealed by fitting the tamper-proof cap. To fit the cap, the **snap ring** 2) has to be removed. Subsequent adjustment is only possible by destroying the tamper-proof cap.

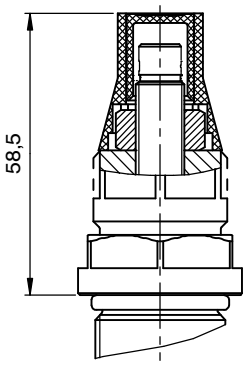

2) Snap ring (remove for "P" model)

17 Application examples (active control)

Simplified symbol

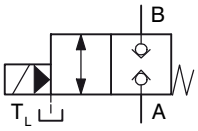

Application with seat valve

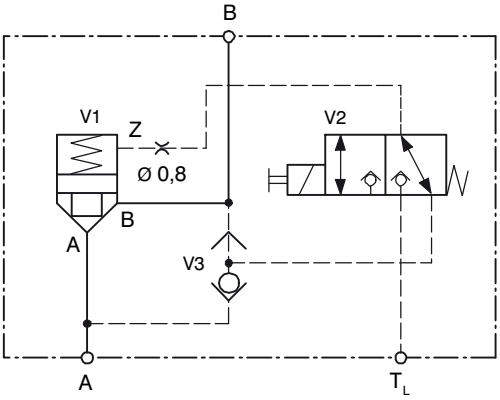

Logic valve application for lowest possible vented pressure with a proportional throttle and bypass compensator

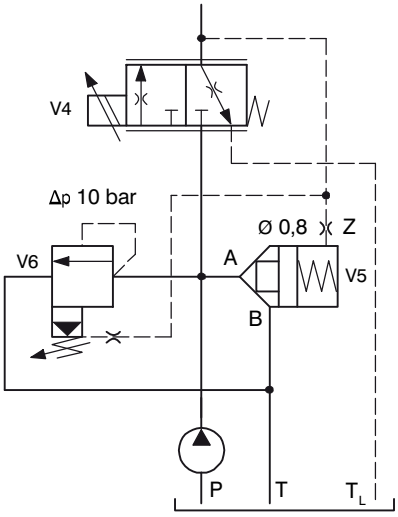

Advantage
When the logic cartridge valve is open (flow A → B / B → A), there is no continuous flow of pilot oil to Z.

V1 = logic cartridge valve
V2 = 3/2 seat valve
V3 = shuttle valve
V4 = proportional throttle cartridge
V5 = logic cartridge valve
V6 = bypass pressure compensator cartridge

18 Ordering code

Ex. WL22 SD _ 2 D1 3 B - 10 _ - _

WL22	=	2/2 logic cartridge valve
SD	=	seat valve with spool seal (**standard**)
S (*)	=	seat valve without spool seal
(blank)	=	non-adjustable (**standard**)
E	=	adjustable
P	=	adjustable; adjuster is sealed
2	=	area ratio (main spool : seat = 2 : 1)
D1	=	fixed orifice in port Z Ø 0.8 (**standard**)
D2	=	orifice Ø 0.6
D3	=	orifice Ø 1.5
D4	=	orifice Ø 1.4
D5	=	orifice Ø 1.3
D6	=	orifice Ø 1.2
D7	=	orifice Ø 1.1
D8	=	orifice Ø 1.0
D9	=	orifice Ø 0.9
D0	=	orifice Ø 0.7
(blank)	=	no orifice

optional orifice in port Z (type G / M3)

1 (*)	=	opening pressure 0.4 bar
2 (*)	=	opening pressure 1.0 bar
3	=	opening pressure 2.0 bar (**standard**)
4	=	opening pressure 3.0 bar
5	=	opening pressure 6.0 bar
6	=	opening pressure 7.5 bar
7	=	opening pressure 13 bar
B ... Q	=	standard model - see relevant data sheets
Z ... R	=	special features - please consult Bucher
10	=	nominal size 10 mm
(blank)	=	Nitrile seals (**standard**)
V	=	Viton seals
		(special seals - please consult Bucher)
1 ... 9	=	design number (omit when ordering new units)

(*) In applications with an opening pressure of less than 2 bar, valve type **WL22S2** ... must be used.
I.e. the seal on the spool is omitted, and the valve is not leak-tight from A → B.

19 Related data sheets

Reference no.	(Old no.)	Description
400-P-040011	(i-32)	The form-tool hire programme
400-P-060181	(i-45.11)	Cavity type DJ
400-P-740131	(G-24.31)	Line-mounting body, type GADJA (G 3/4")
400-P-010101		$MTTF_D$ values for hydraulic valves

info.ch@bucherhydraulics.com www.bucherhydraulics.com

© 2020 by Bucher Hydraulics AG Frutigen, CH-3714 Frutigen
All rights reserved.
Data is provided for the purpose of product description only, and must not be construed as warranted characteristics in the legal sense. The information does not relieve users from the duty of conducting their own evaluations and tests. Because the products are subject to continual improvement, we reserve the right to amend the product specifications contained in this catalogue.

Classification: 430.300.-.305.320.335

2/2 Logic Cartridge Valve, Size 16

Q_{max} = 350 l/min, p_{max} = 420 bar
Active Control, Seated Design
Series WL22SD…

- Active control
- Area ratio 2 : 1
- High flow rates with low Δp
- Seat-valve shut-off from 1 → 2 and 2 → 1
- No pilot oil consumption at 3
- With or without seal on the seated valve spool
- Various opening pressures
- With integral orifice for pilot port
- All exposed parts with zinc-nickel plating
- Can be fitted in a line-mounting body

1 Description

Series WL22SD... actively controlled 2/2 logic valves are size 16, high performance screw-in cartridges with an M42 x 2 mounting thread. The conical-seat design ensures that the cartridges are leak-tight from 1 → 2 and from 2 → 1. When the same pressure exists at ports 1, 2 and 3, the valve spool is held in its closed position by the ≥ 2 bar compression spring. The 1 → 2 and 2 → 1 connection is opened or closed by relieving or pressurising the pilot port 3, bearing in mind the corresponding area- and pressure-ratios. 2/2 logic cartridge valves can be used in both mobile and industrial applications. All external parts of the cartridge are zinc-nickel plated according to DIN EN ISO 19 598 and are thus suitable for use in the harshest operating environments. For self-assembly, please refer to the section related data sheets.

2 Symbol

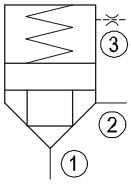

WL22SD …

3 Technical data

General characteristics	Description, value, unit
Designation	2/2 logic cartridge valve
Design	actively controlled, conical-seat type
Mounting method	screw-in cartridge M42 x 2
Tightening torque	200 Nm ± 10 %
Size	nominal 16 mm, cavity type EB
Weight	1.10 kg
Mounting attitude	unrestricted
Ambient temperature range	-25 °C … +80 °C

General characteristics	Description, value, unit
Flow direction	1 → 2 / 2 → 1, see symbol
$MTTF_D$ values	150 years, see data sheet 400-P-010101-en

Hydraulic characteristics	Description, value, unit
Maximum operating pressure	420 bar
Maximum flow rate	350 l/min
Pressure drop	Δp < 5 bar at 100 l/min
Opening pressure: - standard - optional	2.0 bar 0.4 [1] / 6 / 10 / 13 bar
Hydraulic fluid	HL and HLP hydraulic oils to DIN 51 524; for other fluids, please consult Bucher
Hydraulic fluid temperature range	-25 °C … +80 °C
Viscosity range	10 … 650 mm^2/s (cSt), recommended 15...250 mm^2/s (cSt)
Minimum fluid cleanliness level Cleanliness class to ISO 4406: 1999	class 20/18/15

[1] only recommended for use when the seated valve spool is not fitted with a seal.

4 Performance graphs

measured with oil viscosity 33 mm^2/s (cSt)

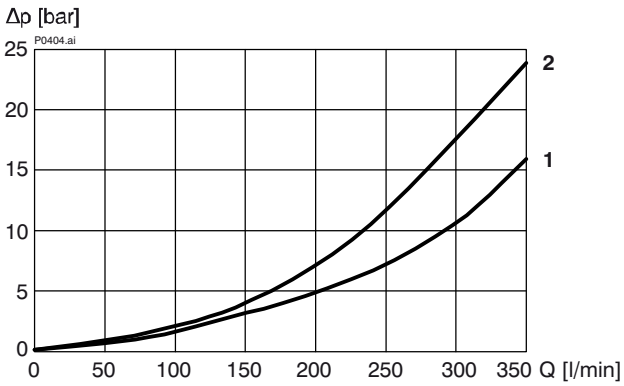

Δp = f (Q) Pressure drop - Flow rate characteristic

1 = cavity type DJ with annular groove
2 = cavity type DJ without annular groove

Attention:
The Δp characteristic is valid when the load pressure in the 1 → 2 / 2 → 1 connection is higher than the opening pressure. If the load pressure is lower than the opening pressure, the load pressure must first rise to overcome the opening pressure before flow can occur.

5 Dimensions, sectional view

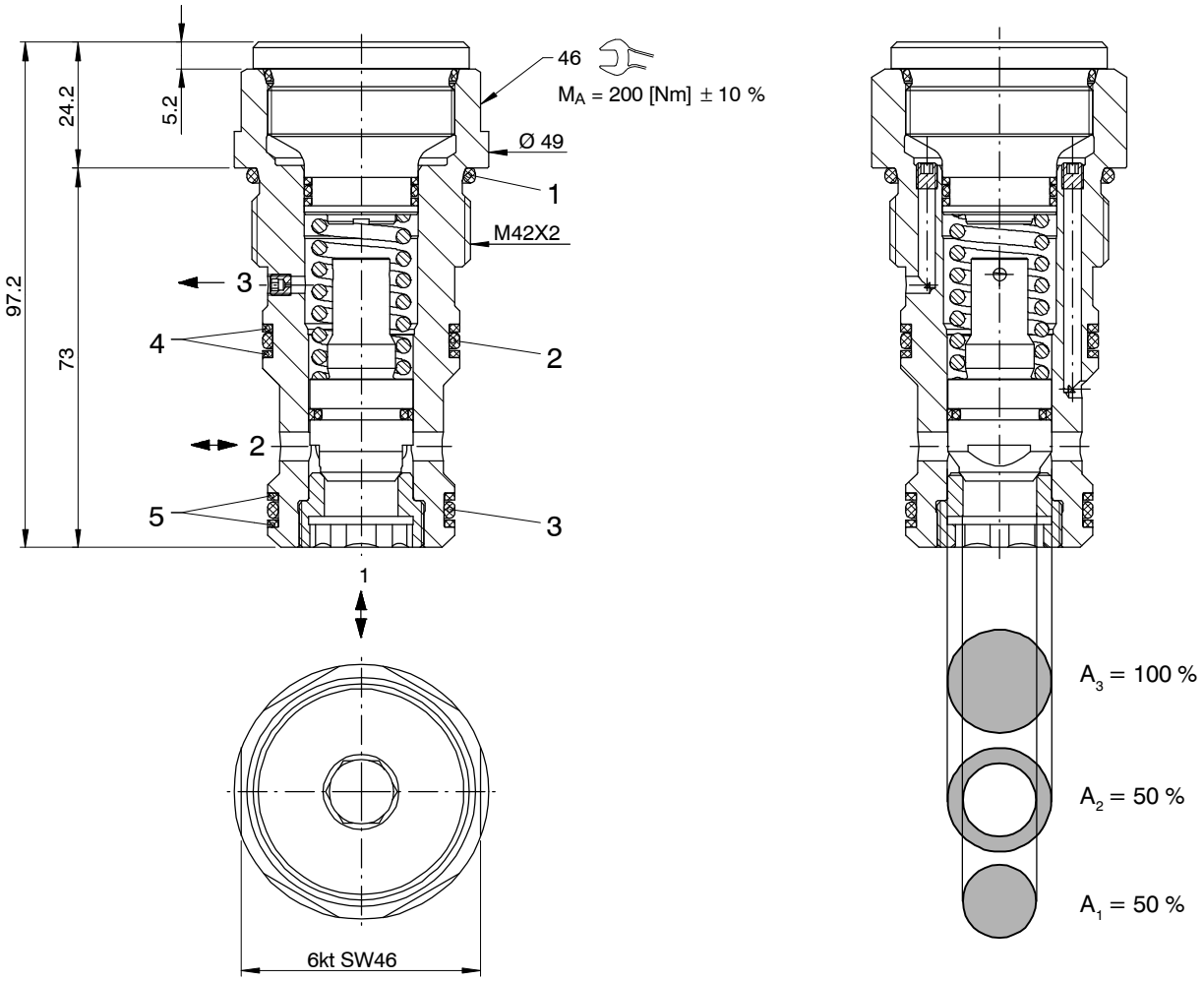

6 Installation information

Important:
No adjustments are necessary, since the cartridges are set in the factory.

Attention:
Only qualified personnel with mechanical skills may carry out any maintenance work. Generally, the only work that should ever be needed is to check and possibly replace the seals. When changing seals, oil or grease the new seals thoroughly before fitting them.

NBR seal kit no. DS-359-N [1)]

Item	Qty.	Description
1	1	O-ring No. 129 ∅ 39.34 x 2.62 N90
2	1	O-ring No. 125 ∅ 32.99 x 2.62 N90
3	1	O-ring No. 124 ∅ 31.42 x 2.62 N90
5	2	Backup ring ∅ 32.0 x 2.0 x 1.4 FI0751
6	2	Backup ring ∅ 30.0 x 2.0 x 1.4 FI0751

IMPORTANT!
1) Seal kit with FKM (Viton) seals, no. DS-359-V

7 Area- and pressure-ratios

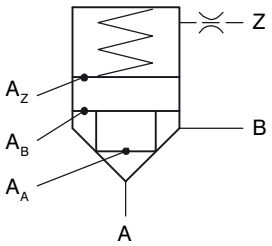

Area A_3 : Area A_1 = 2 : 1
Area A_3 : Area A_2 = 2 : 1
Area A_1 : Area A_2 = 1 : 1

8 Application examples (active control)

Simplified symbol

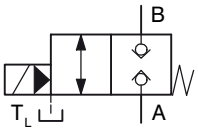

Application with seat valve

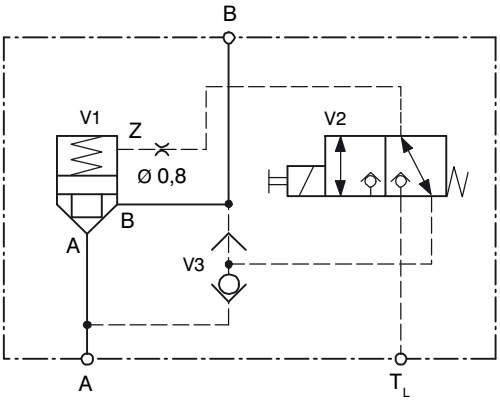

Logic valve application for lowest possible vented pressure with a proportional throttle and bypass compensator

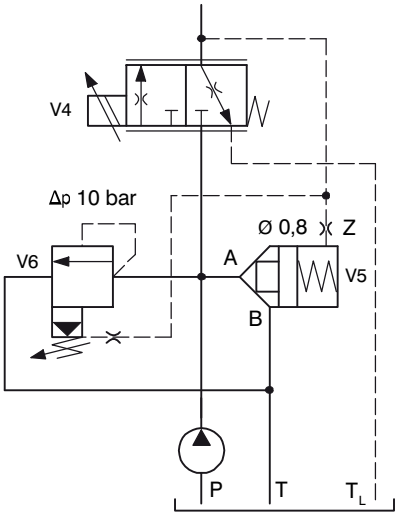

Advantage
When the logic cartridge valve is open (flow A → B / B → A), there is no continuous flow of pilot oil to Z.

V1 = logic cartridge valve
V2 = 3/2 seat valve
V3 = shuttle valve
V4 = proportional throttle cartridge
V5 = logic cartridge valve
V6 = bypass pressure compensator cartridge

9 Ordering code

Ex. WL22 SD _ _ _ _ 2 D1 3 A – 16 _ – _

WL22 = 2/2 logic cartridge valve

SD = seat valve with spool seal (standard)
S ** = seat valve without spool seal

(blank) = standard spool
U = soft–switching (only with R spool, active control)
R = active control (nose 2mm, 2 groove 45º, soft-switching)
L = active control (no nose, not soft–switching)

(blank) = no nut, standard (nut at spool end only by L and R)
N = with nut

(blank) = no orifice
1 = orifice Ø 0.8
2 = orifice Ø 0.5 (standard)
3 = orifice Ø 1.6
4 = orifice Ø 1.4
5 = orifice Ø 1.3
6 = orifice Ø 1.2
7 = orifice Ø 1.1
8 = orifice Ø 1.0
9 = orifice Ø 0.9
0 = orifice Ø 0.7

} optional orifice in valve spool * (type G / M5)

2 = area ratio (main spool : seat = 2 : 1)

D1 = orifice Ø 0,8
D3 = orifice Ø 1,5
D4 = orifice Ø 1,4
D5 = orifice Ø 1,3
D6 = orifice Ø 1,2
D7 = orifice Ø 1,1
D8 = orifice Ø 1,0
D9 = orifice Ø 0,9

} optional orifice in port 3 (type G / M3)

1 ** = opening pressure 0.4 bar
3 = opening pressure 2.0 bar (standard)
5 = opening pressure 6.0 bar
6 = opening pressure 10 bar
7 = opening pressure 13 bar

A ... Q = standard model – see relevant data sheets
Z ... R = special features – please consult Bucher

16 = nominal size 16

(blank) = Nitrile seals (standard)
V = Viton seals
(special seals – please consult Bucher)

1 ... 9 = design number (omit when ordering)

* Orifice in valve spool has to be at least 30% smaller than orifice in port "3".

** In applications with an opening pressure of less than 2 bar, valve type WL22S2 ... must be used.
I.e. the seal on the spool is omitted, and the valve is not leak-tight from 1 to 2.

WWW.SUMY.IR

10 Related data sheets

Reference no.	(Old no.)	Description
400-P-040011	(i-32)	The form-tool hire programme
400-P-080111	(i-55.2)	Cavity type EB
400-P-750115		Line-mounting body, type GEBAA (G 1”)
400-P-010101		$MTTF_D$ values for hydraulic valves

info.ch@bucherhydraulics.com www.bucherhydraulics.com

© 2023 by Bucher Hydraulics AG Frutigen, CH-3714 Frutigen
All rights reserved.
Data is provided for the purpose of product description only, and must not be construed as warranted characteristics in the legal sense. The information does not relieve users from the duty of conducting their own evaluations and tests. Because the products are subject to continual improvement, we reserve the right to amend the product specifications contained in this catalogue.

Classification: 430.300.-.305.330.335

2/2 Logic Cartridge Valve, Size 10

Q_{max} = 150 l/min, p_{max} = 420 bar
Active Control, Seated Design, Soft Switching
Series WL22SDU…, WL22SDS1…

- Active control
- Soft switching, or soft switching + snap action
- Seated valve spool with 4 mm nose and notch
- Area ratio 2 : 1
- High flow rates with low Δp
- Seat-valve shut-off from A → B and B → A
- No pilot oil consumption at Z
- With or without seal on the seated valve spool
- Various opening pressures
- With integral orifice for pilot port
- All external parts zinc plated, chromited (CrVI-free)
- Can be fitted in a line-mounting body

1 Description

Series WL22SDU... and WL22SDS1... actively controlled 2/2 logic valves are size 10, high performance screw-in cartridges with an M27 x 2 mounting thread. The conical-seat design ensures that the cartridges are leak-tight from A → B and from B → A. When the same pressure exists at ports A, B and Z, the valve spool is held in its closed position by the ≥ 2 bar compression spring. The A → B and B → A connection is opened or closed by relieving or pressurising the pilot port Z, bearing in mind the corresponding area- and pressure-ratios. The soft-switching feature is available in two different versions which influence the opening behaviour of the valve spool. In the case of the ”U” model, the soft-switching is effective over the whole opening stroke of the valve spool, and is affected by Δp and Q. With the ”S” (snap action) model, however, soft switching is only effective during the beginning of the opening stroke. The switching times are by governed by the clearance between the plunger and the damping sleeve. The snap action of the ”S” version results from the slot in the plunger, which causes rapid unloading of the damping chamber. In this design, the length of the overlap determines the snap start point. In addition, the spool's 4 mm nose and integral notch reinforce the soft-switching behaviour of both models. 2/2 logic cartridge valves can be used in both mobile and industrial applications. All external parts are zinc plated and chromited (CrVI-free) and are thus suitable for use in the harshest operating environments. If you intend to manufacture your own cavities or are designing a line-mounting installation, please refer to the section ”Related data sheets”.

2 Symbol

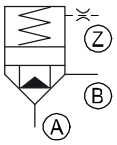

WL22SDU…, WL22SDS1…

3 Technical data

General characteristics	Description, value, unit
Designation	2/2 logic cartridge valve
Design	actively controlled, conical-seat type, soft switching
Mounting method	screw-in cartridge M27 x 2
Tightening torque	150 Nm ± 10 %
Size	Nominal size 10 mm, cavity type DJ

WWW.SUMY.IR

General characteristics	Description, value, unit
Weight	0.21 kg
Mounting attitude	unrestricted
Ambient temperature range	-25 °C … +80 °C
Flow direction	A → B / B → A, see symbol

Hydraulic characteristics	Description, value, unit
Maximum operating pressure	420 bar
Maximum flow rate	150 l/min
Pressure drop	Δp < 5 bar at 100 l/min
Opening pressure - standard - optional	2.0 bar 0.4 [1] / 1.0 [1] / 3.0 / 6.0 / 7.5
Hydraulic fluid	HL and HLP hydraulic oils to DIN 51 524; for other fluids, please consult Bucher
Hydraulic fluid temperature range	-25 °C … +80 °C
Viscosity range	10…650 mm^2/s (cSt), recommended 15...250 mm^2/s (cSt)
Minimum fluid cleanliness level Cleanliness class to ISO 4406: 1999	class 20/18/15

[1] only recommended for use when the seated valve spool is not fitted with a seal.

4 Performance graphs

measured with oil viscosity 33 mm^2/s (cSt)

Δp = f (Q) Pressure drop - Flow rate characteristic

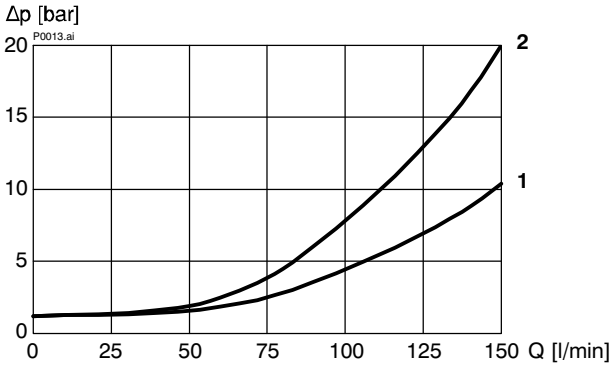

1 = cavity type DJ **with annular groove**
2 = cavity type DJ **without annular groove**

p = f (t) Soft-switching characteristic (**Example**)

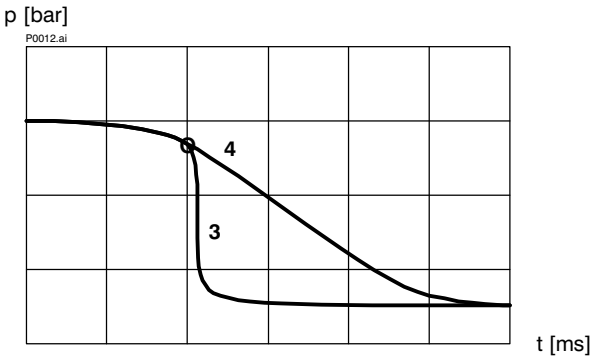

3 = soft switching, snap action
4 = soft switching
O = snap point

Attention:
The Δp characteristic is valid when the load pressure in the A → B / B → A connection is higher than the opening pressure. If the load pressure is lower than the opening pressure, the load pressure must first rise to overcome the opening pressure before flow can occur.

Attention:
Switching times vary with pressure, flow rate, etc. The overall soft-switching behaviour is very heavily dependent on the usage and must be established in the particular application.

5 Dimensions, sectional view

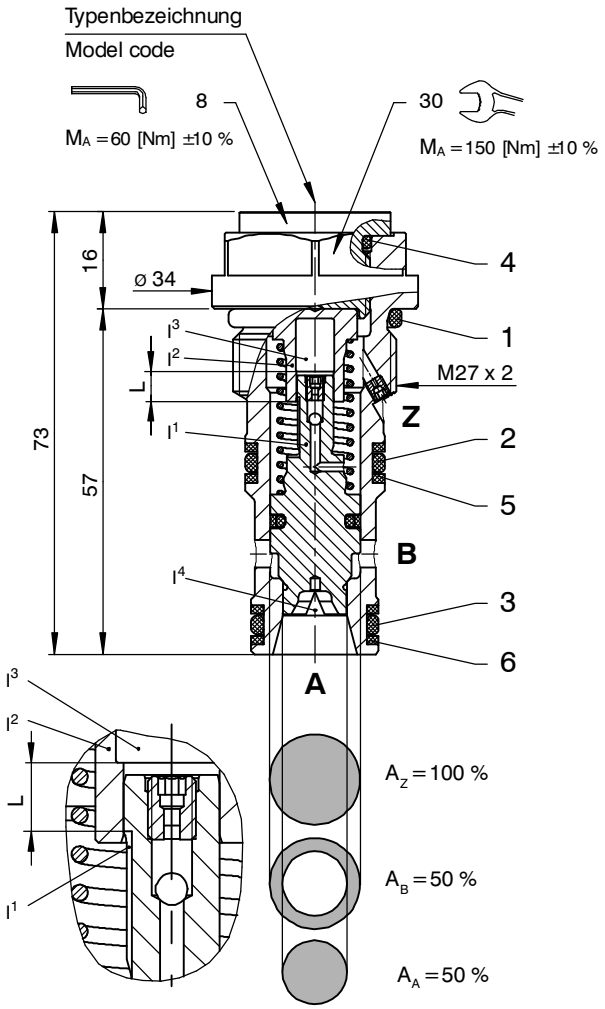

L = overlap length
l^1 = plunger with axial slot
l^2 = damping sleeve
l^3 = damping chamber
l^4 = spool nose with notch

6 Installation information

Important
No adjustments are necessary, since the cartridges are set in the factory.

Attention
Only qualified personnel with mechanical skills may carry out any maintenance work. Generally, the only work that should ever be needed is to check and possibly replace the seals. When changing seals, oil or grease the new seals thoroughly before fitting them.

NBR seal kit no. DS-296-N [1)]

Item	Pcs.	Description
1	1	O-ring No. 119 ∅ 23.47 x 2.62 N90
2	1	O-ring No. 116 ∅ 18.72 x 2.62 N90
3	1	O-ring No. 114 ∅ 15.54 x 2.62 N90
4	1	O-ring No. 016 ∅ 15.60 x 1.78 N90
5	2	Backup ring ∅ 17.1 x 2.0 x 1.4 FI0751
6	2	Backup ring ∅ 15.3 x 2.0 x 1.4 FI0751

IMPORTANT!
1) Seal kit with FKM (Viton) seals, no. DS-296-V

7 Area- and pressure-ratios

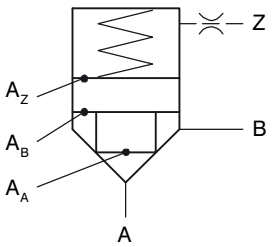

Area A_Z : Area A_A = 2 : 1
Area A_Z : Area A_B = 2 : 1
Area A_A : Area A_B = 1 : 1

8 Adjuster types (optional)

Type **"E" adjuster** (WL22S.E2D...); can only be supplied with series WL22SDU... valves.

Important
Can be used to limit the opening stroke, for example, or to block the valve spool in the closed position.

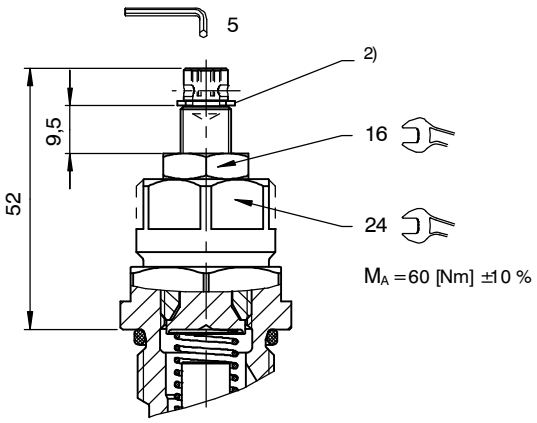

"E" adjuster with **"P" tamper-proof cap** (WL22S.P2D…); can only be supplied with series WL22SDU... valves.

Important
Valve settings can be sealed by fitting the tamper-proof cap. To fit the cap, the **snap ring** 2) has to be removed. Subsequent adjustment is only possible by destroying the tamper-proof cap.

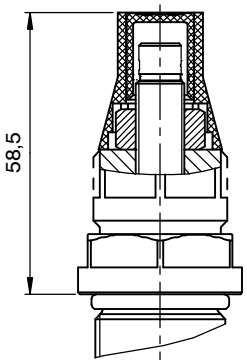

2) Snap ring (remove for "P" model)

9 Application examples

Simplified symbol

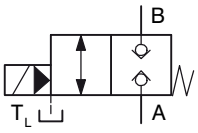

Application with seat valve, featuring soft switching when A → B / B → A opens

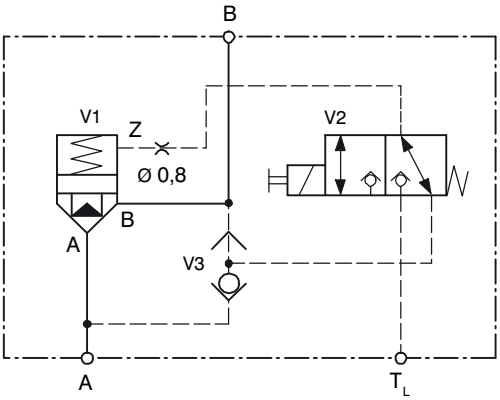

Application: accumulator charging, with soft pump switch-off to vented bypass

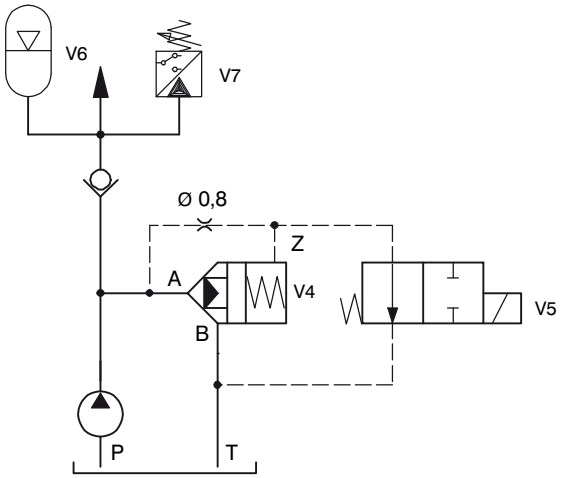

Advantage
When the logic cartridge valve is open (flow A → B / B → A), there is no continuous flow of pilot oil to Z.

V1 = logic cartridge valve, soft-switching
V2 = 3/2 seat valve
V3 = shuttle valve
V4 = logic cartridge valve, soft-switching, or snap action
V5 = 2/2 spool valve
V6 = pressure accumulator
V7 = pressure switch

10 Ordering code

Ex. WL22 | SD | U | _ | 2 | D1 | 4 | B – 10 | _ – _

WL22	=	2/2 logic cartridge valve
SD	=	seat valve with spool seal (standard)
S (*)	=	seat valve without spool seal
U	=	soft switching, gentle (standard) (only with ≥ 3,0 bar opening pressure)
S1	=	soft switching, snap action (only with ≥ 3,0 bar opening pressure)
(blank)	=	non-adjustable (standard)
E	=	adjustable (only with gentle soft-switching)
P	=	adjustable, adjuster is sealed (only with gentle soft switching)
2	=	area ratio (main spool : seat = 2 : 1)
D1	=	fixed orifice in port Z Ø 0.8 (standard)
D2	=	orifice Ø 0.6
D3	=	orifice Ø 1.5
D4	=	orifice Ø 1.4
D5	=	orifice Ø 1.3
D6	=	orifice Ø 1.2
D7	=	orifice Ø 1.1
D8	=	orifice Ø 1.0
D9	=	orifice Ø 0.9
D0	=	orifice Ø 0.7
(blank)	=	no orifice
		optional orifice in port Z (type G / M3)
1 (*)	=	opening pressure 0.4 bar
2 (*)	=	opening pressure 1.0 bar
3 (*)	=	opening pressure 2.0 bar
4	=	opening pressure 3.0 bar (standard)
5	=	opening pressure 6.0 bar
6	=	opening pressure 7.5 bar
B ... Q	=	standard model - see relevant data sheets
Z ... R	=	special features - please consult Bucher
10	=	nominal size 10 mm
(blank)	=	Nitrile seals (standard)
V	=	Viton seals (special seals - please consult Bucher)
1 ... 9	=	design number (omit when ordering new units)

(*) In applications with an opening pressure of less than 3 bar, valve types WL22SU2... or WL22SS12... must be used. I.e. the seal on the spool is omitted, and the valve is not leak-tight from A → B.

11 Related data sheets

Reference no.	(Old no.)	Description
400-P-040011	(i-32)	The form-tool hire programme
400-P-060181	(i-45.11)	Cavity type DJ
400-P-740131	(G-24.31)	Line-mounting body, type GADJA (G 3/4")

info.ch@bucherhydraulics.com www.bucherhydraulics.com

© 2023 by Bucher Hydraulics AG Frutigen, CH-3714 Frutigen
All rights reserved.
Data is provided for the purpose of product description only, and must not be construed as warranted characteristics in the legal sense. The information does not relieve users from the duty of conducting their own evaluations and tests. Because the products are subject to continual improvement, we reserve the right to amend the product specifications contained in this catalogue.

Classification: 430.300.-.305.320.335

2/2 Logic Cartridge Valve, Size 10

Q_{max} = 150 l/min, p_{max} = 420 bar
Passive Control, Seated Design
Series WL22SDLN…, WL22SDRN…, WL22SDPN…

- Passive control
- Area ratio 2 : 1
- Valve spool with 2 mm or 4 mm nose and notch
- High flow rates with low Δp
- Seat-valve shut-off from A → B and B → A
- Various opening pressures
- With integral orifice for pilot port
- All external parts zinc plated, chromited (CrVI-free)
- Can be fitted in a line-mounting body

1 Description

Series WL22SDLN..., WL22SDRN..., and WL22SDPN passively controlled 2/2 logic valves are size 10, high performance screw-in cartridges with an M27 x 2 mounting thread. The conical-seat design ensures that the cartridges are leak-tight from A → B and from B → A. When the same pressure exists at ports A, B and Z, the valve spool is held in its closed position by the ≥ 2 bar compression spring. The A → B and B → A connection is opened or closed by relieving or closing the pilot port Z. When the Z port is vented (A → B and B → A connection open), there is a continuous discharge of pilot oil through the spool orifice, the flow rate being dependent on the Δp in A, B and Z. When port Z is closed, the check valves that are incorporated in the valve spool allows the pressure in Z to rise to the higher of the two pressures in A and B. The area ratio AZ : AA = 2 : 1 results in a net force on the valve spool, thus closing the A → B connection. If the same pressure exists at the A and B ports, closing port Z will still cause the valve spool to close, but only due to the ≥ 2 bar spring. The valve's opening and closing switching times can be influenced by using suitable orifices pairings (in the valve spool and in port Z) and spool nose length (2 mm or 4 mm). 2/2 logic cartridge valves can be used in both mobile and industrial applications. All external parts are zinc plated and chromited (CrVI-free) and are thus suitable for use in the harshest operating environments. If you intend to manufacture your own cavities or are designing a line-mounting installation, please refer to the section ”Related data sheets”.

2 Symbol

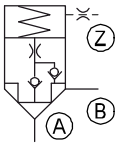

WL22SDLN…,

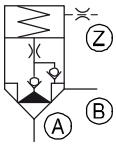

WL22SDRN…, WL22SDPN…

3 Technical data

General characteristics	Description, value, unit
Designation	2/2 logic cartridge valve
Design	passively controlled, conical-seat type
Mounting method	screw-in cartridge M27 x 2
Tightening torque	150 Nm ± 10 %
Size	Nominal 10 mm, cavity type DJ
Weight	0.21 kg
Mounting attitude	unrestricted

WWW.SUMY.IR

General characteristics	Description, value, unit
Ambient temperature range	-25 °C … +80 °C
Flow direction	A → B / B → A, see symbol

Hydraulic characteristics	Description, value, unit
Maximum operating pressure	420 bar
Maximum flow rate	150 l/min
Pressure drop	< Δp = 5 bar at 100 l/min
Opening pressure - standard - optional	2.0 bar 0.4 / 1.0 / 3.0 / 6.0 / 7.5 / 13 bar
Hydraulic fluid	HL and HLP hydraulic oils to DIN 51 524; for other fluids, please consult Bucher
Hydraulic fluid temperature range	-25 °C … +80 °C
Viscosity range	10…650 mm^2/s (cSt), recommended 15...250 mm^2/s (cSt)
Minimum fluid cleanliness level Cleanliness class to ISO 4406: 1999	class 20/18/15

4 Performance graphs

measured with oil viscosity 33 mm^2/s (cSt)

Δp = f (Q) Pressure drop - Flow rate characteristic
- WL22SDLN… (no spool nose)
- WL22SDRN… (with spool nose, 2 mm notch)

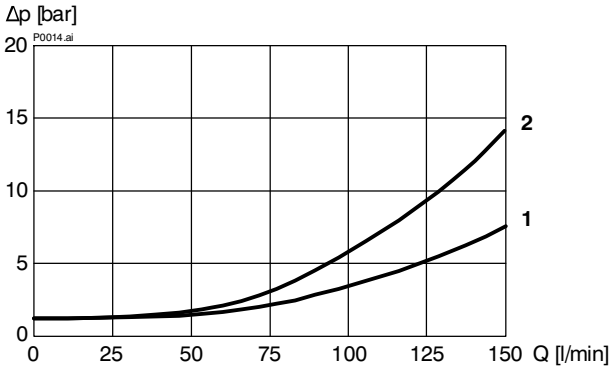

Δp = f (Q) Pressure drop - Flow rate characteristic
- WL22SDPN... (with spool nose, 4 mm notch)

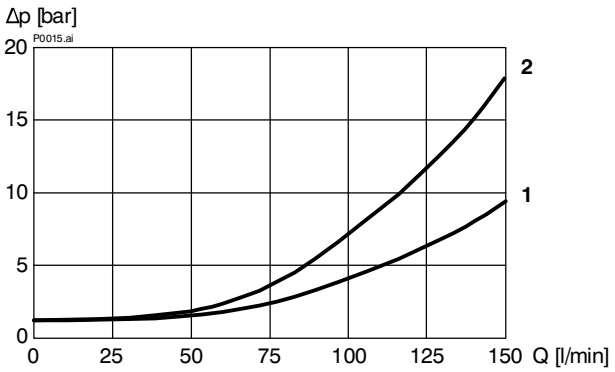

1 = Cavity type DJ with annular groove
2 = Cavity type DJ without annular groove

Attention:
The Δp characteristic is valid when the load pressure in the A → B / B → A connection is higher than the opening pressure. If the load pressure is lower than the opening pressure, the load pressure must first rise to overcome the opening pressure before flow can occur.

5 Dimensions, sectional view

Model with **no nose on the valve spool** (WL22SDLN…)

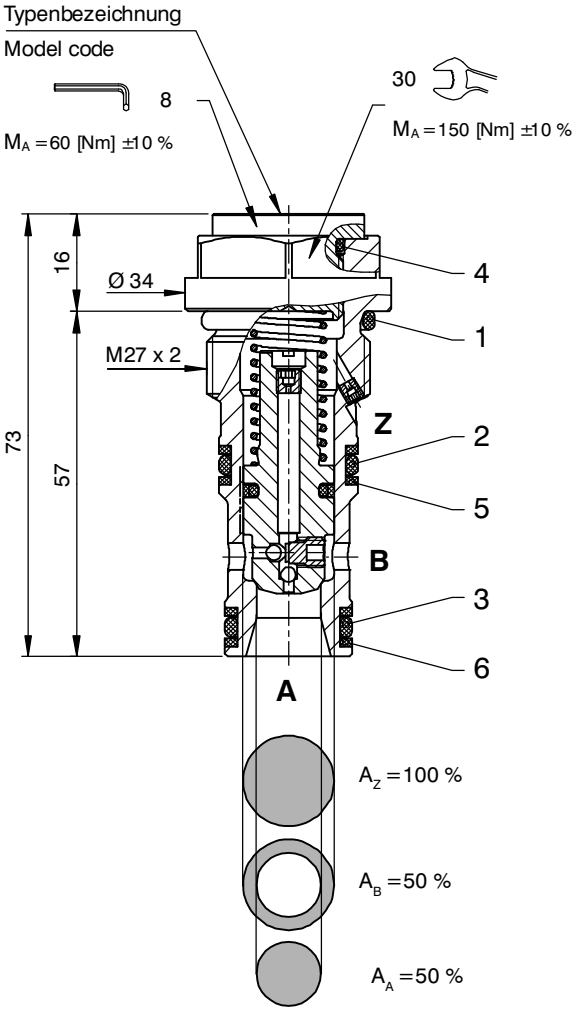

Model **with nose and notch on the valve spool**
- 2 mm nose (WL22SDRN…)
- 4 mm nose (WL22SDPN…)

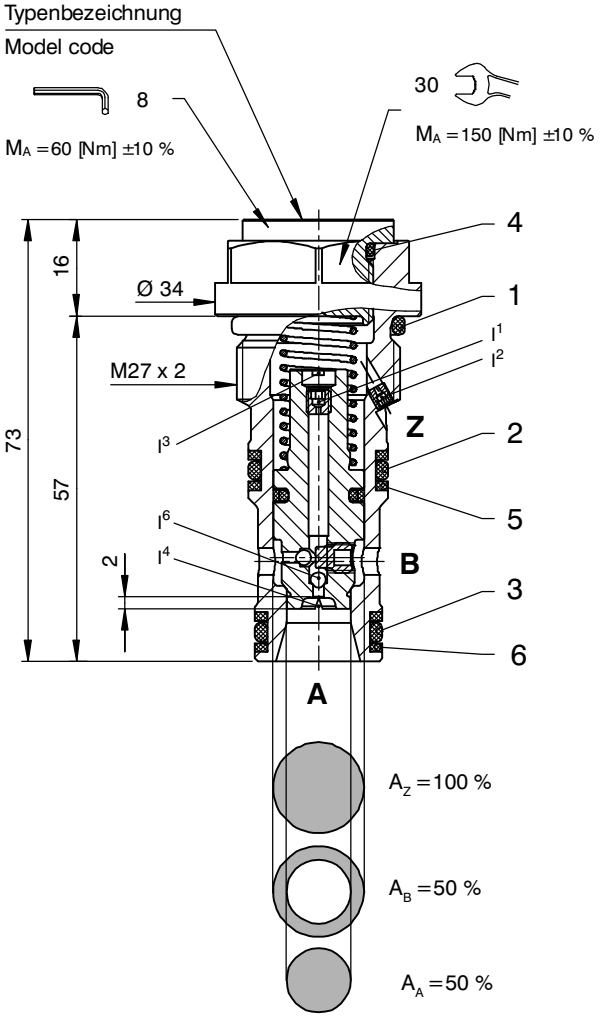

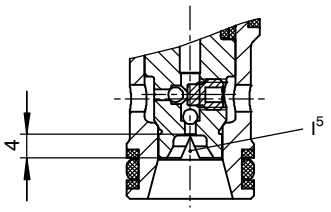

I^1 = orifice in valve spool
I^2 = orifice in pilot port Z
I^3 = valve spool end with slot
I^4 = spool nose with 2 mm notch
I^5 = spool nose with 4 mm notch
I^6 = integral check valves

6 Area- and pressure-ratios

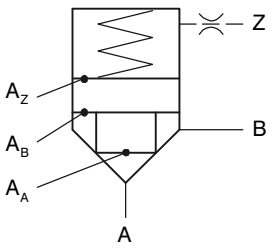

Area A_Z : Area A_A = 2 : 1
Area A_Z : Area A_B = 2 : 1
Area A_A : Area A_B = 1 : 1

7 Adjuster types (optional)

Type **"E" adjuster** (WL22S...E2D...)

Important
Can be used to limit the opening stroke, for example, or to block the valve spool in the closed position.

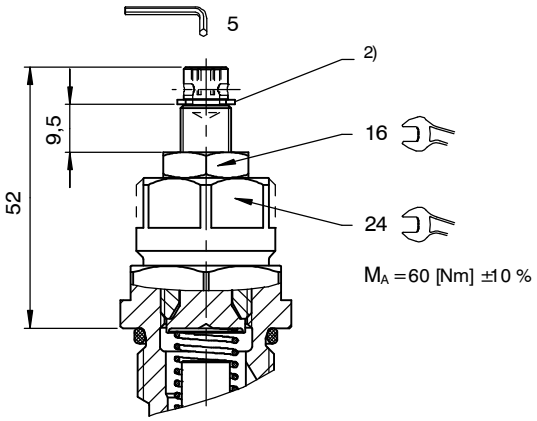

2) Snap ring (remove for "P" model)

"E" adjuster with **"P" tamper-proof cap** (WL22S...P2D…)

Important:
Valve settings can be sealed by fitting the tamper-proof cap. To fit the cap, the **snap ring** 2) has to be removed. Subsequent adjustment is only possible by destroying the tamper-proof cap.

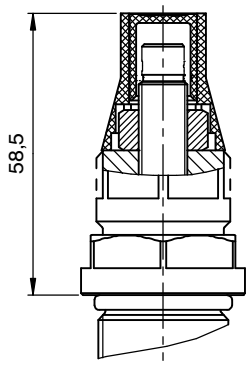

8 Installation information

Important:
No adjustments are necessary, since the cartridges are set in the factory.

Attention:
Only qualified personnel with mechanical skills may carry out any maintenance work. Generally, the only work that should ever be needed is to check and possibly replace the seals. When changing seals, oil or grease the new seals thoroughly before fitting them.

NBR seal kit no. DS-296-N 1)

Item	Pcs.	Description
1	1	O-ring No. 119 ∅ 23.47 x 2.62 N90
2	1	O-ring No. 116 ∅ 18.72 x 2.62 N90
3	1	O-ring No. 114 ∅ 15.54 x 2.62 N90
4	1	O-ring No. 016 ∅ 15.60 x 1.78 N90
5	2	Backup ring ∅ 17.1 x 2.0 x 1.4 FI0751
6	2	Backup ring ∅ 15.3 x 2.0 x 1.4 FI0751

IMPORTANT!

1) Seal kit with FKM (Viton) seals, no. DS-296-V

9 Application examples

Simplified symbol

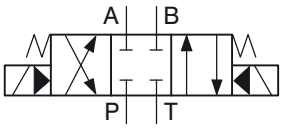

Simplified symbols

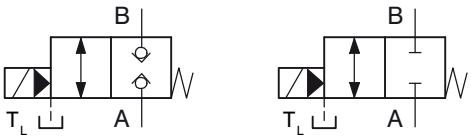

Application with 4/3 spool valve

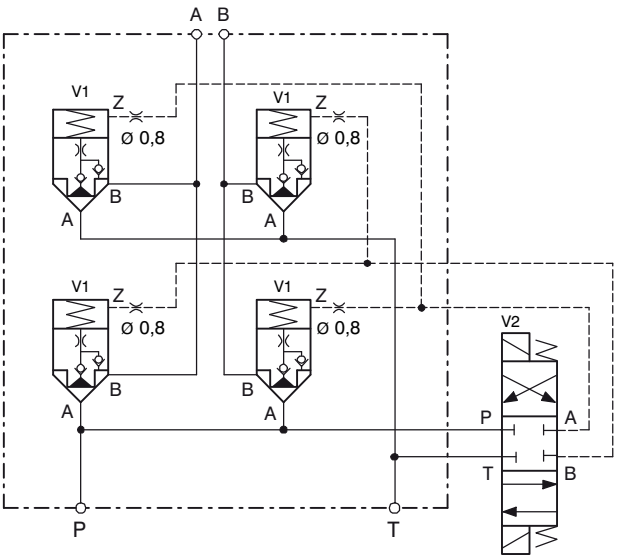

Application with 2/2 seat valve

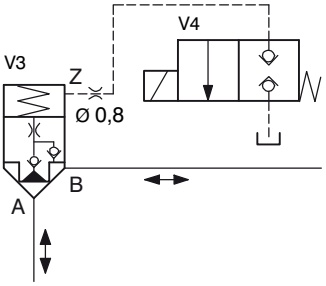

Application with 2/2 spool valve

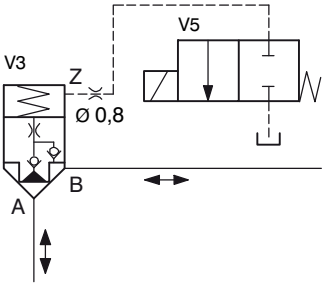

Passively controlled
In the open condition (flow A → B / B → A), there is a continuous flow of pilot oil.

V1 = logic cartridge valve
V2 = 4/3 spool valve (pilot stage)

V3 = logic cartridge valve
V4 = 2/2 seat valve (pilot stage)
V5 = 2/2 spool valve (pilot stage)

10 Related data sheets

Reference no.	(Old no.)	Description
400-P-040011	(i-32)	The form-tool hire programme
400-P-060181	(i-45.11)	Cavity type DJ
400-P-740131	(G-24.31)	Line-mounting body, type GADJA (G 3/4")

11 Ordering code

Ex. | WL22 | SD | L | _ | 1 | _ | 2 | D1 | 3 | B | – | 10 | _ | – | _ |

WL22 = 2/2 logic cartridge valve

SD = seat valve with spool seal

L = passive control, no spool nose
R = passive control, with 2 mm spool nose (length)
P = passive control, with 4 mm spool nose (length)

N = with slot in the valve spool (standard)
(blank) = no slot in the valve spool

1 = orifice Ø 0.8 (standard)
2 = orifice Ø 0.6
3 = orifice Ø 1.5
4 = orifice Ø 1.4
5 = orifice Ø 1.3
6 = orifice Ø 1.2
7 = orifice Ø 1.1
8 = orifice Ø 1.0
9 = orifice Ø 0.9
0 = orifice Ø 0.7

optional orifice in valve spool* (type G / M5)

(blank) = non–adjustable (standard)
E = adjustable
P = adjustable; adjuster is sealed

2 = area ratio (main spool : seat = 2 : 1)

D3 = orifice Ø 1.5
D4 = orifice Ø 1.4
D5 = orifice Ø 1.3
D6 = orifice Ø 1.2
D7 = orifice Ø 1.1
D8 = orifice Ø 1.0
D9 = orifice Ø 0.9
(blank) = no orifice

optional orifice in port Z (type G / M3)

3 = opening pressure 2.0 bar (standard)
4 = opening pressure 3.0 bar
5 = opening pressure 6.0 bar
6 = opening pressure 7.5 bar
7 = opening pressure 13 bar (only with WL22SDLN…)

B ... Q = standard model - see relevant data sheets
Z ... R = special features - please consult Bucher

10 = nominal size 10 mm

(blank) = Nitrile seals (standard)
V = Viton seals
(special seals - please consult Bucher)

1 ... 9 = design number (omit when ordering new units)

* Orifice in valve spool has to be at least 30% smaller than orifice in port ”Z”.

info.ch@bucherhydraulics.com www.bucherhydraulics.com

© 2022 by Bucher Hydraulics AG Frutigen, CH-3714 Frutigen
All rights reserved.
Data is provided for the purpose of product description only, and must not be construed as warranted characteristics in the legal sense. The information does not relieve users from the duty of conducting their own evaluations and tests. Because the products are subject to continual improvement, we reserve the right to amend the product specifications contained in this catalogue.

Classification: 430.300.-.305.320.335

2/2 Logic Cartridge Valve, Size 16

Q_{max} = 350 l/min, p_{max} = 420 bar
Passive Control, Seated Design
Series WL22SDL…

- Area ratio 2 : 1
- High flow rates with low Δp
- Seat-valve shut-off from 1 → 2 and 2 → 1
- Glide seal on the seated valve spool
- Various opening pressures
- Orifice for pilot port is integrated in the cartridge
- all external parts are chromited and are Cr VI-free
- Can be fitted in a line-mounting body

1 Description

Series WL22SDL...-16 logic cartridges are 2/2, screw-in, actively controlled valves with the 2 switched positions ”ON” and ”OFF”, 2 main ports 1 and 2, a pilot port 3, and a closing spring. A passive control system is integrated in the seated valve spool. All external parts of the cartridge are zinc-nickel plated according to DIN EN ISO 19 598 and are thus suitable for use in the harshest operating environments. For self-assembly, please refer to the section related data sheets.

2 Symbol

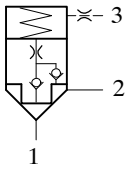

3 Main characteristics

Designation		2/2 logic cartridge valve
Design		direct acting conical–seat type
Mounting method		screw–in cartridge M42 x 2
Size		nominal size 16 mm, cavity type EB to ISO 7789–42–06–0–07
Weight	kg	1.10
Mounting attitude		unrestricted
Flow direction		1 → 2 / 2 → 1, see symbol
Operating pressure range in 1, 2 and 3	bar	... 420
Opening pressure: standard as an option	bar	2.0 0.4 / 6 / 10 / 13
Flow rate $Q_{max.}$	l/min	350
Hydraulic fluid		HL and HLP hydraulic oils to DIN 51 524; for other fluids, please consult BUCHER
Fluid temperature range	°C	–25 ... +80
Ambient temperature	°C	–25 ... +80
Viscosity range	mm^2/s (cSt)	10 ... 650 recommended 15 ... 250
Minimum fluid cleanliness level		20/18/15 to ISO 4406 : 1999

Phase-Out

4 Performance graphs

measured with oil viscosity 33 mm²/s (cSt)

Δp-Q characteristics
in cavity type EB **with annular groove**
(1 → 2 and 2 → 1 with p3 = 0 bar)

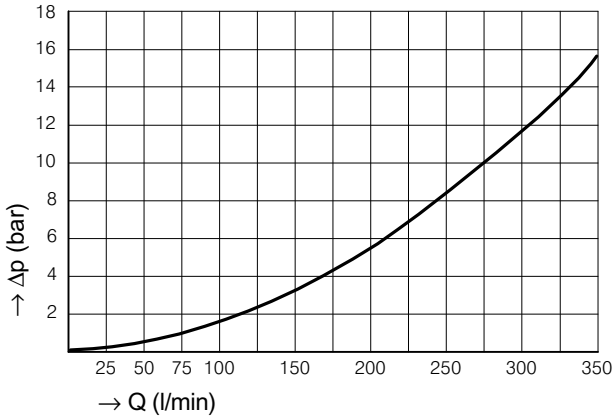

Δp-Q characteristics
in cavity type EB **without annular groove**
(1 → 2 and 2 → 1 with p3 = 0 bar)

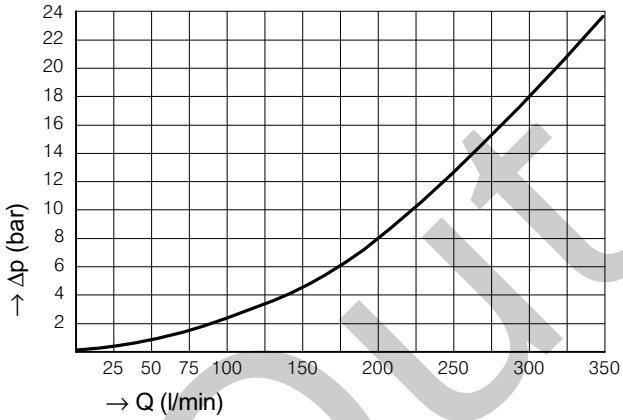

The Δp characteristic is valid when the load pressure in the connection 1 → 2 / 2 → 1 is greater than the opening pressure. If the load pressure is less than the opening pressure, the load pressure must first rise to overcome the opening pressure before flow can occur.

5 Application examples

for passively controlled logic valves

Simplified symbol

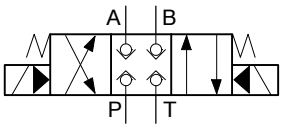

Application with 4/3 directional valve

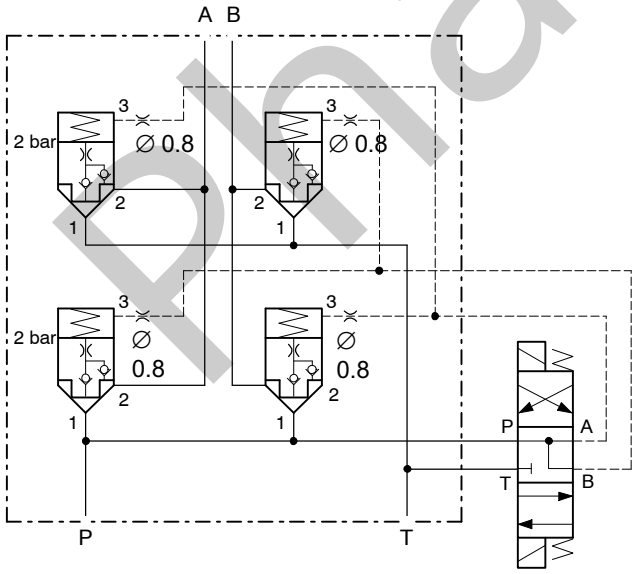

Passive control

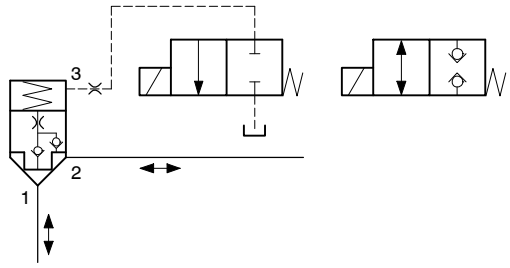

Passively controlled:
In the open condition (flow 1 → 2 / 2 → 1), there is a continuous consumption of pilot oil

Phase-Out

6 Dimensions / schematic section

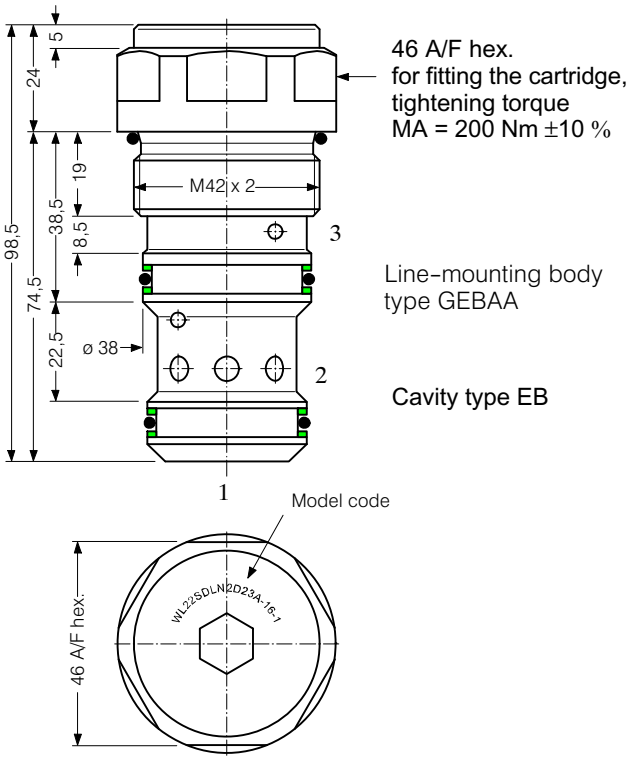

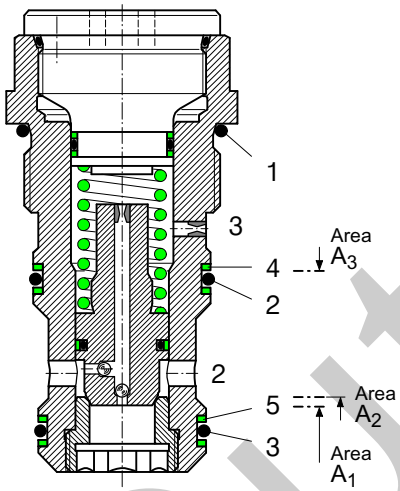

Seal kit no. DS-359, comprising:

It.	Qty.	Description	Size
1	1	O-ring no. 129	∅ 39.34 x 2.62 N90
2	1	O-ring no. 125	∅ 32.99 x 2.62 N90
3	1	O-ring no. 124	∅ 31.42 x 2.62 N90
4	2	Backup ring	∅ 32 x 2.0 x 1.4 FI0751
5	2	Backup ring	∅ 30 x 2.0 x 1.4 FI0751

7 Area- and pressure-relationships

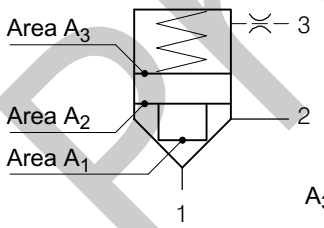

$A_3 : A_1 : A_2 = 2 : 1 : 1$

8 Installation and servicing

All work must be carried out with care and by qualified personnel only. When fitting the cartridge, ensure that the seals are oiled or greased and use the specified tightening torque. When changing seals, oil or grease the new seals thoroughly before fitting them.

Phase-Out

WWW.SUMY.IR

9 Ordering code

Ex. WL22 SD L 2 2 D1 3 A – 16 _ – _

WL22 = 2/2 logic cartridge valve
SD = seat valve with spool seal
L = passive control, no spool nose

1 = orifice Ø 0.8
2 = orifice Ø 0.5 (standard)
3 = orifice Ø 0.6
4 = orifice Ø 1.4
5 = orifice Ø 1.3
6 = orifice Ø 1.2
7 = orifice Ø 1.1
8 = orifice Ø 1.0
9 = orifice Ø 0.9
0 = orifice Ø 0.7
} optional orifice in valve spool* (Typ G / M5)

2 = area ratio (main spool : seat = 2 : 1)

D1 = orifice Ø 0.8
D3 = orifice Ø 1.5
D4 = orifice Ø 1.4
D5 = orifice Ø 1.3
D6 = orifice Ø 1.2
D7 = orifice Ø 1.1
D8 = orifice Ø 1.0
D9 = orifice Ø 0.9
(blank) = no orifice
} optional orifice in port 3 (type G / M3)

3 = opening pressure 2.0 bar (standard)
5 = opening pressure 6.0 bar
6 = opening pressure 10 bar
7 = opening pressure 13 bar

A ... Q = standard model – see relevant data sheets
Z ... R = special features – please consult Bucher

16 = nominal size 16 mm

(blank) = Nitrile seals (standard)
V = Viton seals
(special seals – please consult Bucher)

1 ... 9 = design number (omit when ordering new units)

* Orifice in valve spool has to be at least 30% smaller than orifice in port "3".

10 Related data sheets

New no.	
400-P-040011	The form-tool hire programme
400-P-080111	Cavity type EB to ISO 7789-42-06-0-07
400-P-160101	2/2 logic cartridge valve, series WL22SD...-16
400-P-160151	2/2 logic cartridge valve, series WL22SDUR...-16
400-P-750115	Line-mounting body, type GEBAA (G1")

info.ch@bucherhydraulics.com www.bucherhydraulics.com

© 2022 by Bucher Hydraulics AG Frutigen, CH-3714 Frutigen
All rights reserved.
Data is provided for the purpose of product description only, and must not be construed as warranted characteristics in the legal sense. The information does not relieve users from the duty of conducting their own evaluations and tests. Because the products are subject to continual improvement, we reserve the right to amend the product specifications contained in this catalogue.

Classification: 4300.-.305.330.335

Phase-Out

2/2 Logic Cartridge Valve, Size 16

Q_{max} = 350 l/min, p_{max} = 420 bar
Passive Control, Seated Design, Soft Switching
Series WL22SDUR…

- Area ratio 2 : 1
- High flow rates with low Δp
- Seat-valve shut-off from 1 → 2 and 2 → 1
- Glide seal on the seated valve spool
- Various opening pressures
- Orifice for pilot port is integrated in the cartridge
- All exposed parts with zinc-nickel plating
- Can be fitted in a line-mounting body

1 Description

Series WL22SDUR...-16 logic cartridges are 2/2, screw-in, actively controlled valves with the 2 switched positions "ON" and "OFF", 2 main ports 1 and 2, a pilot port 3, and a closing spring. A passive control system is integrated in the seated valve spool. Spool damping has been incorporated to provide soft-switching.

All external parts are chromited (Cr VI-free) and are thus suitable for use in the harshest operating environments.
For customers who manufacture their own manifold blocks, we offer form-tool sets for sale or hire. Use the GEBAA body with threaded ports (G1") for line-mounting applications.

2 Symbol

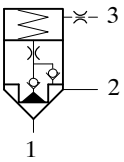

WL22SDUR ...

3 Main characteristics

Designation		2/2 logic cartridge valve
Design		direct acting conical-seat type
Mounting method		screw-in cartridge M42 x 2
Size		nominal size 16 mm, cavity type EB to ISO 7789-42-06-0-07
Weight	kg	1.10
Mounting attitude		unrestricted
Flow direction		1 → 2 / 2 → 1, see symbol
Operating pressure range in 1, 2 and 3	bar	... 420
Opening pressure: standard as an option	bar	2.0 0.4 / 6 / 10 / 13
Flow rate $Q_{max.}$	l/min	350
Hydraulic fluid		HL and HLP hydraulic oils to DIN 51 524; for other fluids, please consult BUCHER
Fluid temperature range	°C	-25 ... +80

Phase-Out

Ambient temperature	°C	–25 ... +80
Viscosity range	mm^2/s (cSt)	10 ... 650 recommended 15 ... 250
Minimum fluid cleanliness level		20/18/15 to ISO 4406 : 1999

4 Performance graphs

measured with oil viscosity 33 mm^2/s (cSt)

Δp-Q characteristics
in cavity type EB **with annular groove**
(1 → 2 and 2 → 1 with p3 = 0 bar)

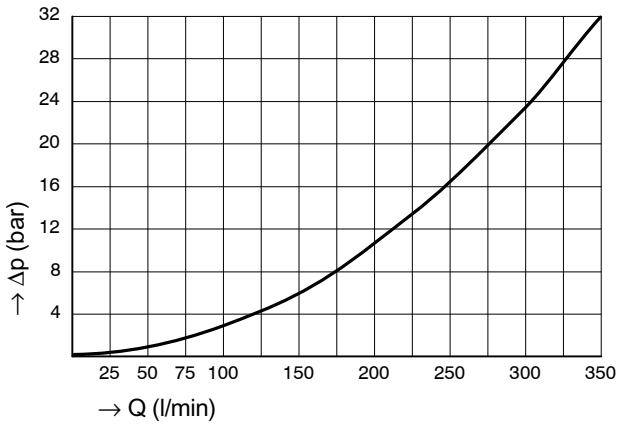

Δp-Q characteristics
in cavity type EB **without annular groove**
(1 → 2 and 2 → 1 with p3 = 0 bar)

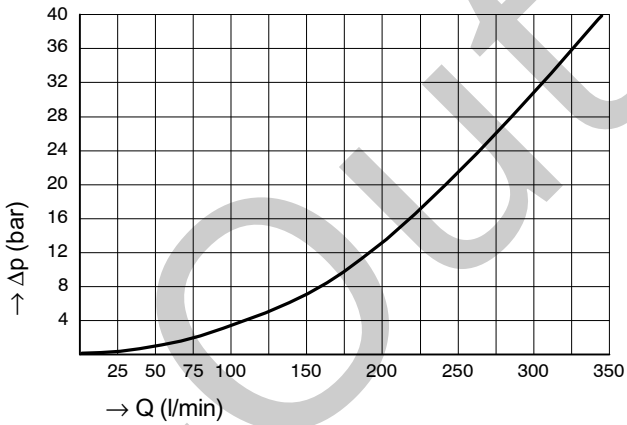

The Δp characteristic is valid when the load pressure in the connection 1 → 2 / 2 → 1 is greater than the opening pressure. If the load pressure is less than the opening pressure, the load pressure must first rise to overcome the opening pressure before flow can occur.

5 Application examples

for passively controlled logic valves

Simplified symbol

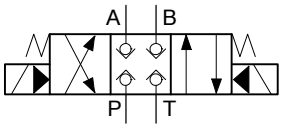

Application with 4/3 directional valve

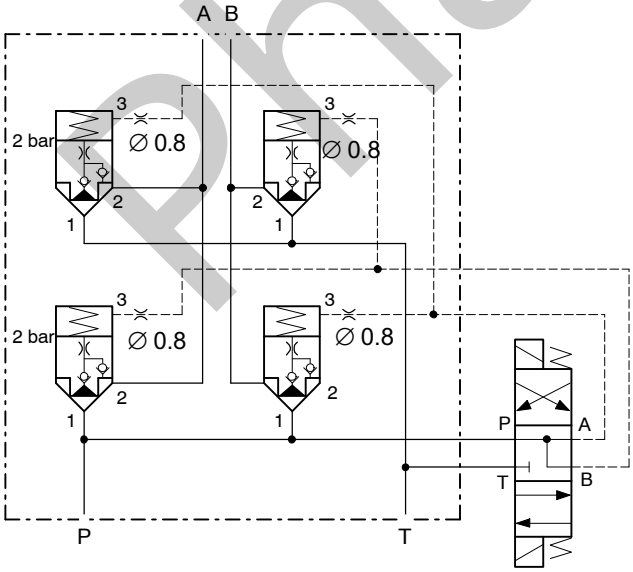

Passive control

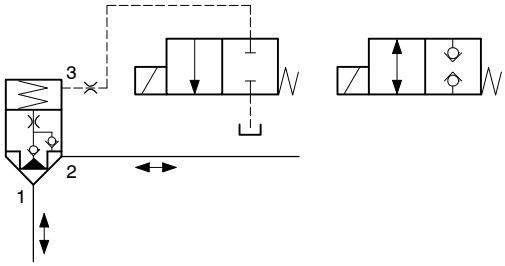

Passively controlled:
In the open condition (flow 1 → 2 / 2 → 1), there is a continuous consumption of pilot oil

Phase-Out

6 Dimensions / schematic section

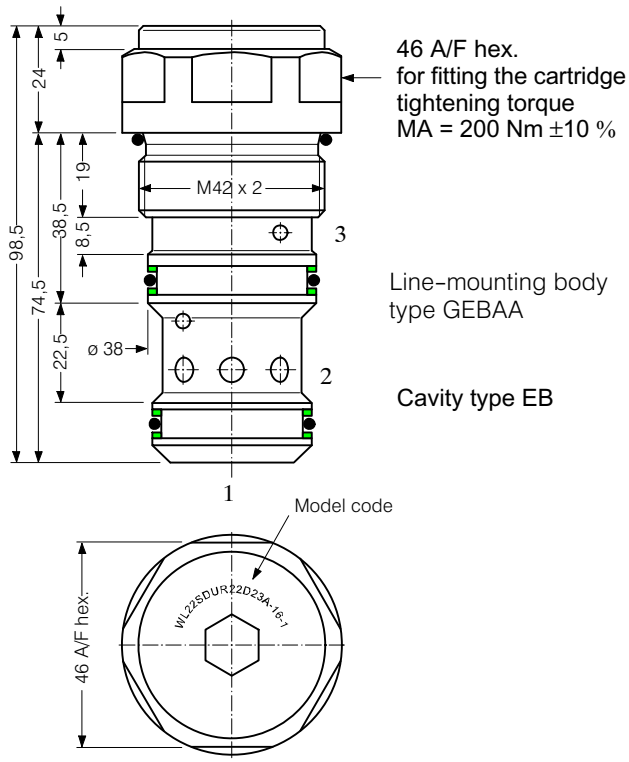

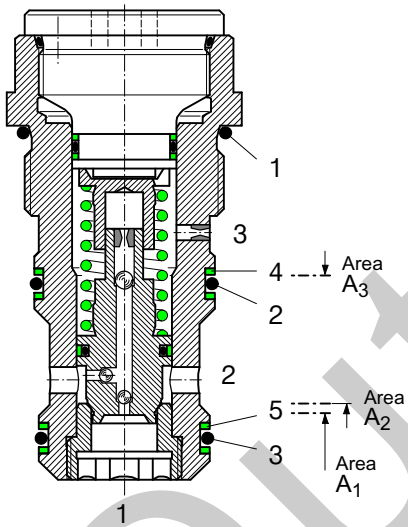

Seal kit no. DS-359, comprising:

It.	Qty.	Description	Size
1	1	O-ring no. 129	∅ 39.34 x 2.62 N90
2	1	O-ring no. 125	∅ 32.99 x 2.62 N90
3	1	O-ring no. 124	∅ 31.42 x 2.62 N90
4	2	Backup ring	∅ 32 x 2.0 x 1.4 FI0751
5	2	Backup ring	∅ 30 x 2.0 x 1.4 FI0751

7 Area- and pressure-relationships

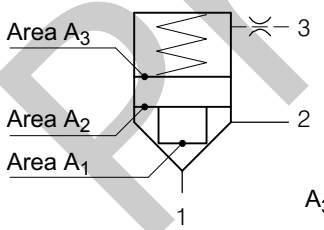

$A_3 : A_1 : A_2 = 2 : 1 : 1$

8 Installation and servicing

All work must be carried out with care and by qualified personnel only. When fitting the cartridge, ensure that the seals are oiled or greased and use the specified tightening torque.

When changing seals, oil or grease the new seals thoroughly before fitting them.

Phase-Out

9 Ordering code

z.B. WL22 SD U R 2 2 3 A - 16 _ - 1

WL22 = 2/2 logic valve
SD = seat valve with spool seal
U = soft switching
R = passive control, soft switching

Spool orifice:
1 = orifice ∅ 0,8
2 = orifice ∅ 0,5 (standard)
3 = orifice ∅ 0,6
4 = orifice ∅ 1,4
5 = orifice ∅ 1,3
6 = orifice ∅ 1,2
7 = orifice ∅ 1,1
8 = orifice ∅ 1,0
9 = orifice ∅ 0,9
0 = orifice ∅ 0,7

2 = area ratio (main spool : seat = 2 : 1)

3 = opening pressure 2,0 bar (standard)
5 = opening pressure 6,0 bar
6 = opening pressure 10 bar
7 = opening pressure 13 bar

A ... Q = standard model - see relevant data sheets
Z ... R = special features - please consult BUCHER

16 = nominal size 16 mm

(blank) = Nitril seals (standard)
V = Viton seals
Special seals - consult Bucher

1 ... 9 = design number (omit when ordering new units)

10 Related data sheets

Old no.	New no.	
i-32	400-P-040011-EN	The form-tool hire programme
i-55.2	400-P-080111-EN	Cavity type EB to ISO 7789-42-06-0-07
W-11.10	400-P-160101-EN	2/2 logic cartridge valve, series WL22SD...-16
W-11.15	400-P-160121-EN	2/2 logic cartridge valve, series WL22SDL...-16
G-29.22	400-P-750115-EN	Line-mounting body, type GEBAA (G1”)

Phase-Out

info.ch@bucherhydraulics.com www.bucherhydraulics.com

© 2020 by Bucher Hydraulics AG Frutigen, CH-3714 Frutigen
All rights reserved.
Data is provided for the purpose of product description only, and must not be construed as warranted characteristics in the legal sense. The information does not relieve users from the duty of conducting their own evaluations and tests. Because the products are subject to continual improvement, we reserve the right to amend the product specifications contained in this catalogue.

Classification: 450300.305.330.335

4/3 and 4/2 Directional Spool Valves, ISO Size 02

Q_{max} = 25 l/min, p_{max} = 250 bar
Direct acting, solenoid operated
Series WEDC…

- For controlling the starting, stopping, and direction of a flow
- Manifold-mounting design, interface to ISO 4401-02-01
- Operated by DC or AC solenoids
- Very reliable functions and extremely stable
- With manual override
- All exposed parts with zinc-nickel plating
- High pressure wet-armature solenoids
- The slip-on coil can be rotated, and it can be replaced without opening the hydraulic envelope

1 Description

The WEDC-…-4… series of directional spool valves are solenoid operated, direct acting, manifold-mounting valves with a size 02 interface to ISO 4401-02-01. The main components of the valves are a steel body, either one or two solenoids, the control spool, and either one or two return springs. In the non-operated state, the return springs hold the control spool in the middle position or initial position. The control spool is operated by the DC or AC solenoids, which are of the oil-immersed type. The integral manual override can be used to move the spool without energizing the coil, for example during a power failure. These 4/3 and 4/2 directional valves are used in plant and machines to control the direction of a flow, and to stop the flow. All external parts of the valve are zinc-nickel plated to DIN 50 979 and are thus suitable for use in the harshest operating environments. The slip-on coils can be replaced without opening the hydraulic envelope and can be positioned at any angle through 360°.

2 Symbols / Spool types

4/2 functions	4/2 functions with 4/3 spool types	4/2 functions with 4/3 spool types	4/3 functions
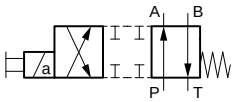 WEDC-42-A…	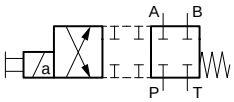 WEDC-42-AD…	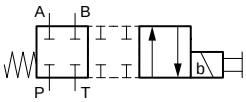 WEDC-42-BD…	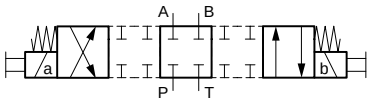 WEDC-43-D…
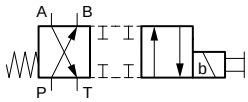 WEDC-42-B…	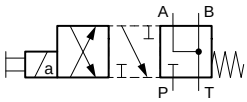 WEDC-42-AG…	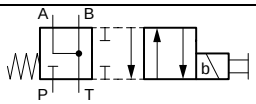 WEDC-42-BG…	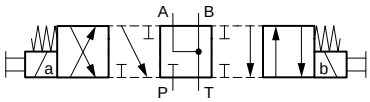 WEDC-43-G…
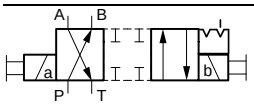 WEDC-42-C…	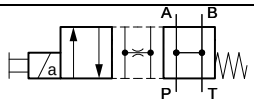 WEDC-42-AH…	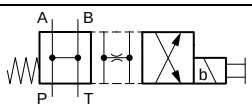 WEDC-42-BH…	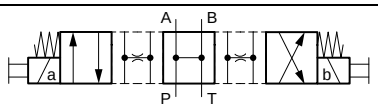 WEDC-43-H…
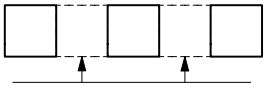 Crossover positions			

NOTE! Other spool types on request.

WWW.SUMY.IR

3 Technical data

General characteristics		Description, value, unit
Designation		4/3 and 4/2 directional spool valves
Design		manifold mounting, direct acting, electrically operated
Mounting method		4 mounting holes for M5x40 mounting bolts (valve mounting bolts supplied with the valve)
Tightening torque		5.2 Nm ± 5 %
Size		size 02 interface to ISO 4401-02-01
Weight	- valve with one solenoid - valve with two solenoids	0.90 kg 1.30 kg
Mounting attitude		unrestricted
Ambient temperature range		-30 °C … +80 °C

Hydraulic characteristics		Description, value, unit
Maximum operating pressure	- ports A, B, P - port T	250 bar 160 bar (static 250 bar)
Maximum flow rate		25 l/min
Flow direction		see table “Symbols / Spool types”
Hydraulic fluid		HL and HLP mineral oil to DIN 51 524; HEES biodegradable fluids; for other fluids, please consult BUCHER
Hydraulic fluid temperature range		-30 °C … +80 °C
Viscosity range		10…500 mm^2/s (cSt), recommended 15...250 mm^2/s (cSt)
Minimum fluid cleanliness Cleanliness class to ISO 4406 : 1999		class 20/18/15

Electrical characteristics	Description, value, unit
Supply voltage	12 V DC, 24 V DC / 115 V AC, 230 V AC (50 … 60 Hz)
Supply voltage tolerance	± 10 %
Nominal power consumption	V DC = 27 W / V AC = 25 W
Switching time	15 … 80 ms (energizing) 10 … 40 ms (de-energizing) Depending on pressure, flow rate, pressure drop and viscosity as well as dwell time under pressure, the switching times may vary from the the stated values.
Relative duty cycle	100 %
Protection class to ISO 20 653 / EN 60 529	IP 65 / IP 67 / IP 69K, see “Ordering code” (with appropriate mating connector and proper fitting and sealing)
Electrical connection	DIN EN 175301-803, 3-pin 2 P+E (standard) for other connectors, see “Ordering code”

4 Performance graphs

Δp = f (Q) Pressure drop - Flow rate characteristic
A / B / C spool

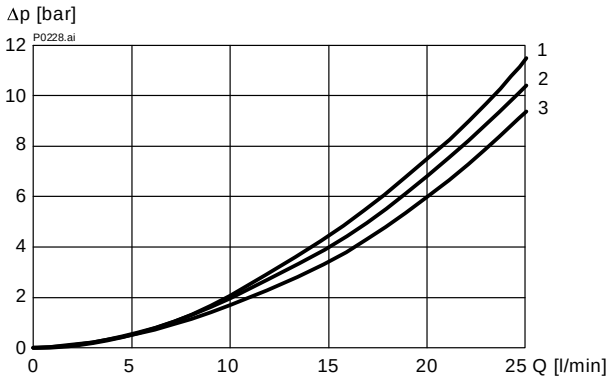

Δp = f (Q) Pressure drop - Flow rate characteristic
D spool

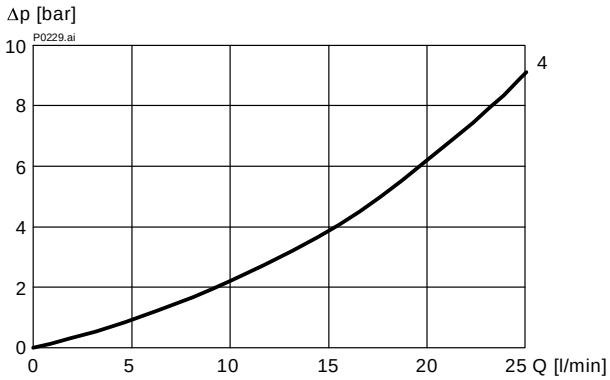

Δp = f (Q) Pressure drop - Flow rate characteristic
G spool

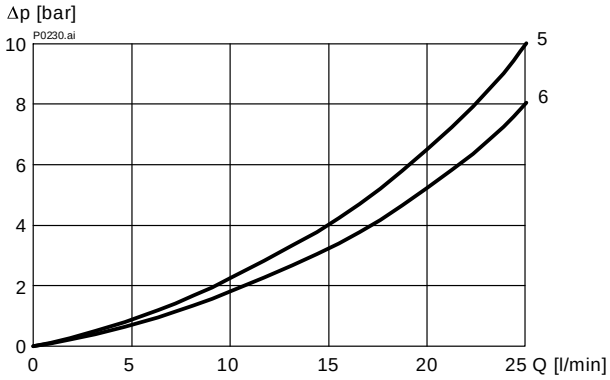

Δp = f (Q) Pressure drop - Flow rate characteristic
H spool

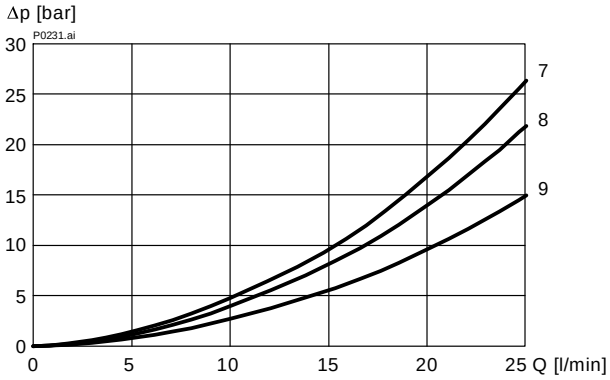

Operated position

Spool type	Flow direction			
	P – A	P – B	A – T	B – T
A / C	3	2	1	2
B	2	3	2	1
D / AD / BD	4	4	4	4
G / AG / BG	5	5	6	6
H / AH / BH	8	8	7	7

Mid-position (de-energized position)

Spool type	Flow direction				
	P – A	P – B	B – T	A – T	P – T
H / AH / BH	–	–	8	8	9

5 Installation information

ATTENTION!
Only qualified personnel with mechanical skills may carry out any maintenance work. Generally, the only work that should ever be undertaken is to check, and possibly replace, the seals. When changing seals, oil or grease the new seals thoroughly before fitting them.

IMPORTANT!
When fitting the valves, use the specified tightening torque for the mounting bolts. No adjustments are necessary, since the cartridges are set in the factory.

6 Dimensions & sectional view

4/3 spool valve (spring centred)

4/2 spool valve (pulse signal, detented)

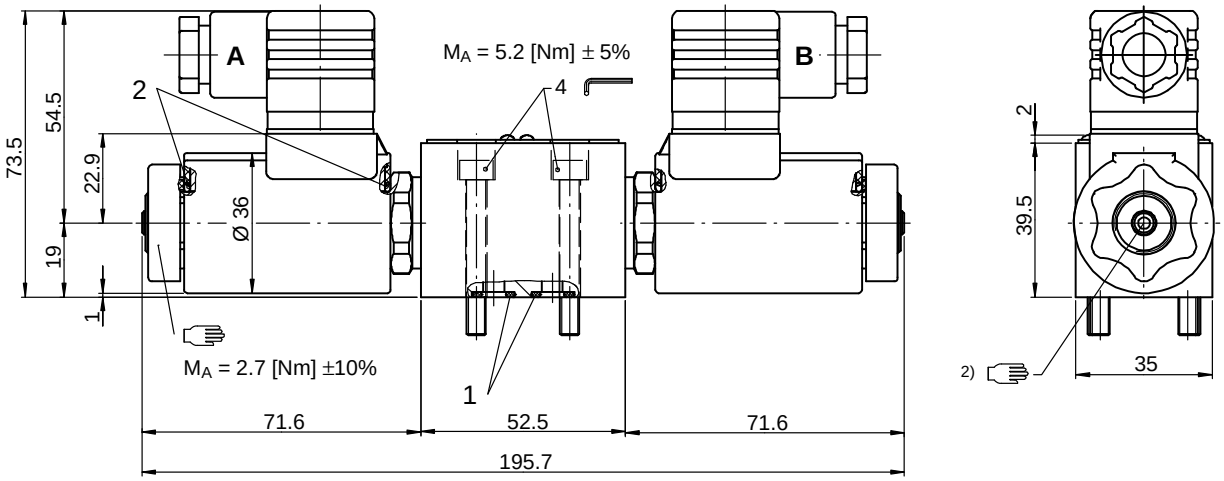

4/2 spool valve (1-solenoid model, A or B side)

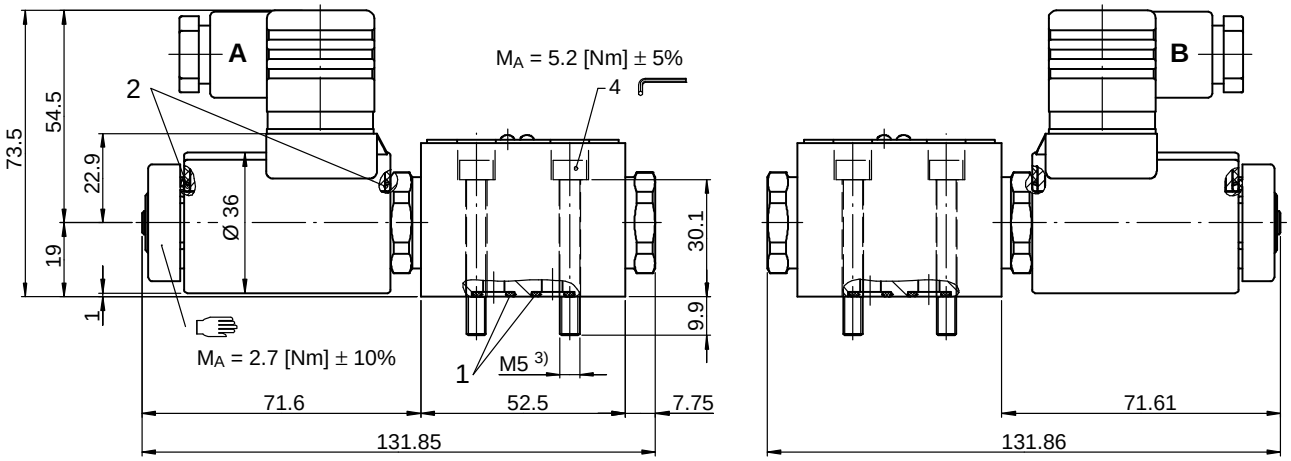

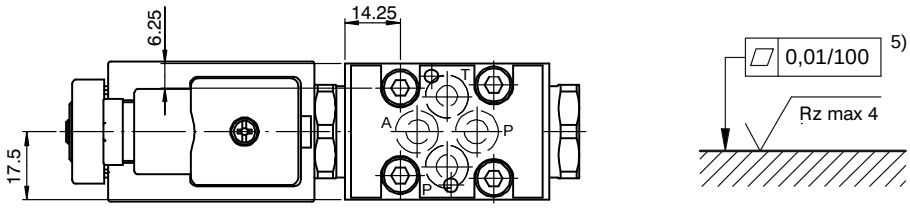

Seal kit NBR no. DS-322-N 4)

Item	Qty.	Description		
1	4	O-ring no. 011	∅ 7,65 x 1,78	N90
2	4	O-ring	∅ 16,00 x 2,00	FKM

IMPORTANT!

2) With manual override

3) Valve mounting bolts M5x40 (included in the delivery)

4) Seal kit with FKM (Viton) seals no. DS-322-V

5) Required surface finish on the mounting face (valve pad)

7 Ordering code

Ex. W E D C - 43 - D - 4 _ - 1 24 D _

W	=	directional valve
E	=	solenoid operated
D	=	direct acting
A ... Q	=	standard model - see relevant data sheets
Z ... R	=	special features - please consult BUCHER
42	=	4/2 function (2 operating positions)
43	=	4/3 function (3 operating positions)
…	=	spool type / symbol to section 3 – page 2 (e.g. AD, D, etc.)
4	=	ISO size 02 interface
(blank)	=	NBR (Nitrile) seals (**standard**)
V	=	FKM (Viton) seals (special seals - please contact BUCHER)
1 ... 9	=	design stage (omit when ordering new units)
...	=	voltage e.g. **24** (24 V)
D	=	current DC
A	=	current AC
(blank)	=	DIN EN 175301-803 connection with mating plug (**standard, IP 65**)
M100	=	DIN EN 175301-803 connection without mating plug
C	=	Kostal plug connection (IP 65)
JT	=	Junior Timer radial plug connection (with protection diode, IP65)
IT	=	Junior Timer axial plug connection (with protection diode, IP65)
D	=	Deutsch plug connection 45° DT04-2P (IP67/69K)
DT	=	Deutsch plug connection 45° DT04-2P (with protection diode, IP67/69K)
S	=	AMP Superseal 1.5 (IP67) / Metri-Pack 150 (IP65) plug connection
F	=	flying leads (500 mm)

} mating plug not supplied

8 Related data sheets

Reference	(Old no.)	Description
400-P-030101	(i-30)	Size 02 interface to ISO 4401-02-01
400-P-120110	(W-2.141)	Coils for screw-in cartridge valves

info.ch@bucherhydraulics.com www.bucherhydraulics.com

© 2024 by Bucher Hydraulics AG Frutigen, CH-3714 Frutigen
All rights reserved.
Data is provided for the purpose of product description only, and must not be construed as warranted characteristics in the legal sense. The information does not relieve users from the duty of conducting their own evaluations and tests. Because the products are subject to continual improvement, we reserve the right to amend the product specifications contained in this catalogue.

Classification: 430.300.-.315.305.300

BUCHER
hydraulics
WWW.SUMY.IR

4/2 and 4/3 Directional Spool Valves, ISO Size 03

Q_{max} = 80 l/min, p_{max} = 350 bar
Direct acting, solenoid operated
Series WEDO…

- For controlling the starting, stopping, and direction of a flow
- Manifold-mounting design, interface to ISO 4401-03-02
- Operated by DC or AC solenoids
- Very reliable functions and extremely stable
- With manual override
- Solenoid coils can be changed quickly and easily without leakage from hydraulics system.

1 Description

The WEDO-…-6… series of directional spool valves are solenoid operated, direct acting, manifold-mounting valves with a size 03 interface to ISO 4401-03-02. The main components of the valves are a steel body, either one or two solenoids, the control spool, and either one or two return springs. In the non-operated state, the return springs hold the control spool in the middle position or initial position. The control spool is operated by the DC or AC solenoids, which are of the oil-immersed type. The integral manual override can be used to move the spool without energizing the coil, for example during a power failure. These 4/3 and 4/2 directional valves are used in plant and machines to control the direction of a flow, and to stop the flow. The slip-on coils can be replaced without opening the hydraulic envelope and can be positioned at any angle through 4x90°. The version WEDO-42-C-6... is fitted with a mechanical detent setting.

2 Symbols / Spool types

4/2 functions	4/2 functions with 4/3 spool types	4/2 functions with 4/3 spool types	4/3 functions
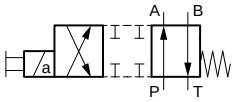 WEDO-42-A…	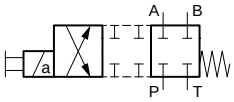 WEDO-42-AD…	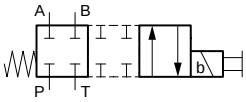 WEDO-42-BD…	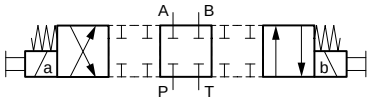 WEDO-43-D…
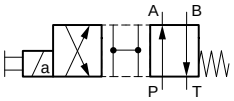 WEDO-42-AN…	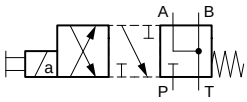 WEDO-42-AG…	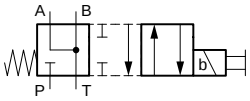 WEDO-42-BG…	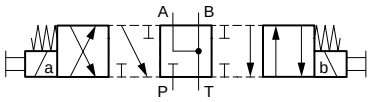 WEDO-43-G…
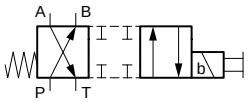 WEDO-42-B…	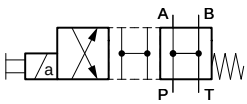 WEDO-42-AH…	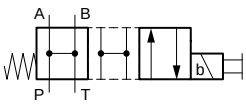 WEDO-42-BH…	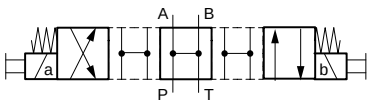 WEDO-43-H…
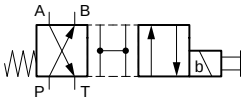 WEDO-42-BN…			

4/2 functions	4/2 functions with 4/3 spool types	4/2 functions with 4/3 spool types	4/3 functions
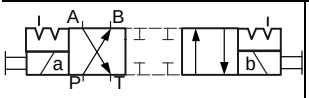 WEDO-42-C…			
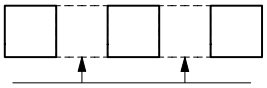 Crossover positions			

NOTE! Other spool types on request.

3 Technical data

General characteristics		Description, value, unit
Designation		4/3 and 4/2 directional spool valves
Design		flange design, direct acting, electrically operated
Mounting method		4 mounting holes for M5x30 mounting bolts (valve mounting bolts supplied with the valve)
Tightening torque		5.2 Nm ± 10 %
Size		size 03 interface to ISO 4401-03-02
Weight	- valve with one solenoid - valve with two solenoids	1.60 kg 2.10 kg
Mounting attitude		horizontal recommended (vertical mounting makes air bleeding difficult)
Ambient temperature range		-30 °C … +80 °C

Hydraulic characteristics		Description, value, unit
Maximum operating pressure	- ports A, B, P - port T	350 bar 210 bar
Maximum flow rate	DC AC	80 l/min 60 l/min
Flow direction		see table “Symbols / Spool types”
Hydraulic fluid		HL and HLP mineral oil to DIN 51 524; HEES biodegradable fluids; for other fluids, please consult BUCHER
Hydraulic fluid temperature range		-30 °C … +80 °C
Viscosity range		10…500 mm^2/s (cSt), recommended 15...250 mm^2/s (cSt)
Minimum fluid cleanliness Cleanliness class to ISO 4406 : 1999		class 20/18/15

Electrical characteristics		Description, value, unit
Standard - Supply voltage		12 V DC, 24 V DC / 110 V AC, 220 V AC (50 … 60 Hz)
Supply voltage tolerance		± 10 %
Ambient temperature range		-20 °C … +50 °C
Nominal power consumption	DC AC	30/31 W energizing 225 VA (RMS) / holding 39 VA (RMS)

Electrical characteristics		Description, value, unit
Switching time bei 40 l/min, 175 bar	DC AC	45 ms (energizing) 28 ms (de-energizing) 15 ms (energizing) 23 ms (de-energizing) Depending on pressure, flow rate, pressure drop and viscosity as well as dwell time under pressure, the switching times may vary from the the stated values.
Relative duty cycle		100 %
Protection class to ISO 20 653 / EN 60 529		IP65 (with appropriate mating connector and proper fitting and sealing)
Electrical connection		DIN EN 175301-803, 3-pin 2 P+E (standard) for other connectors, see “Ordering code”

4 Performance graphs

measured with oil viscosity 33 mm^2/s (cSt), coil at steady-state temperature and 10 % undervoltage

Δp = f (Q) Pressure drop - Flow rate characteristic
A, B, C, D, F, G, H and J spool

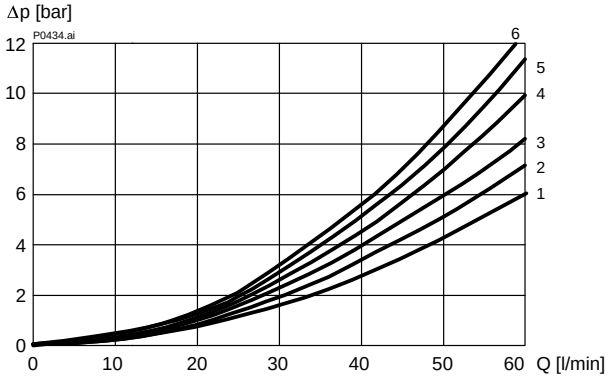

Spool type	Flow direction						
	P ⇒ A	P ⇒ B	P ⇒ T	A ⇒ T	B ⇒ T	A ⇒ B	B ⇒ A
A / B / C	6	6	–	5	5	–	–
AN / BN / CN	5	5	–	2	2	–	–
D	5	5	–	2	2	–	–
G	6	6	–	3* 1	3+ 1	–	–
H	4	4	4 +	2	2	–	–

* in mid–position, B closed
** in mid–position, A closed
\+ in mid–position, A + B closed
++ in mid–position, P closed

WWW.SUMY.IR

p = f (Q) Performance limits with AC-solenoid coil operating at 50 Hz

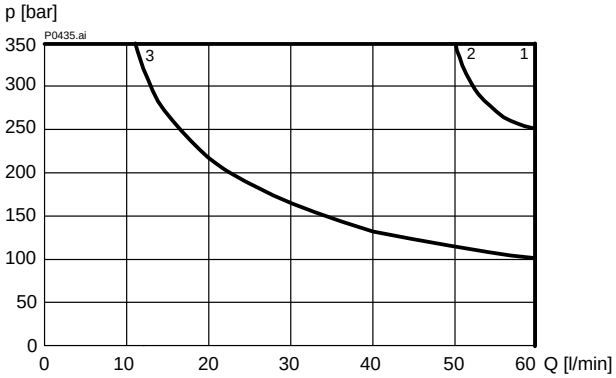

Spool type	Flow direction
A	2
B	2
C	2
D	1
G	3
H	1

p = f (Q) Performance limits - wIth DC-solenoid coil

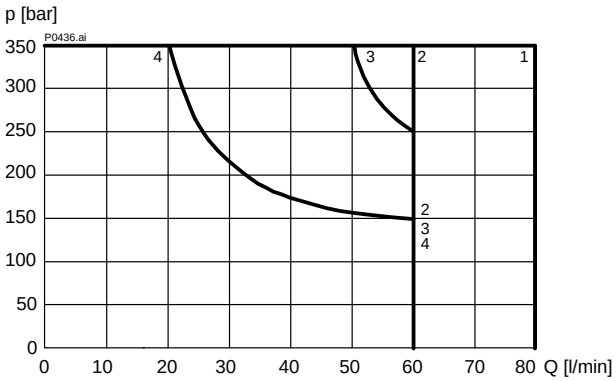

Spool type	Flow direction
A	3
B	3
C	3
D	1
G	4
H	2

IMPORTANT!

The indicated performance limits apply when symmetrical flows pass through the valve.
For non-symmetrical flows, the max. flows are substantially reduced, in worst cases to 33%.

5 Installation information

ATTENTION!
Only qualified personnel with mechanical skills may carry out any maintenance work. Generally, the only work that should ever be undertaken is to check, and possibly replace, the seals. When changing seals, oil or grease the new seals thoroughly before fitting them.

IMPORTANT!
When fitting the valves, use the specified tightening torque for the mounting bolts. No adjustments are necessary, since the cartridges are set in the factory.

6 Dimensions & sectional view

4/3 spool valve (spring centred)

4/2 spool valve (pulse signal, detented)

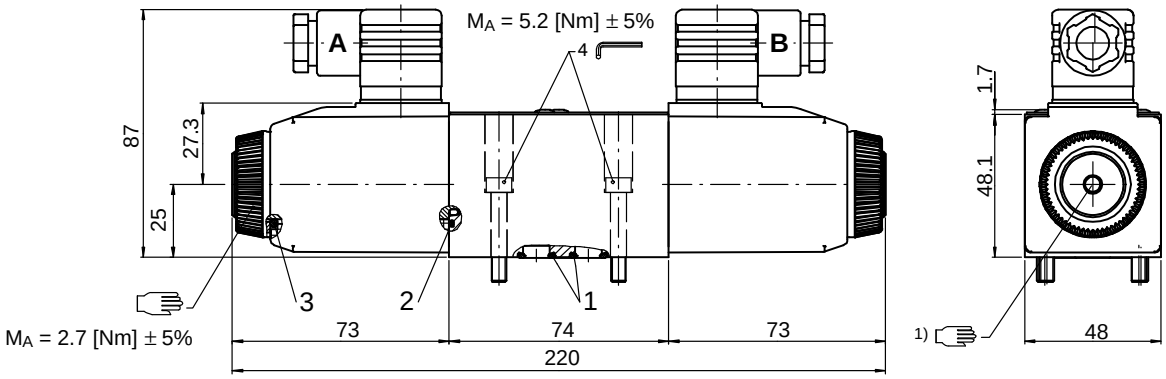

4/2 spool valve (1-solenoid model, A or B side)

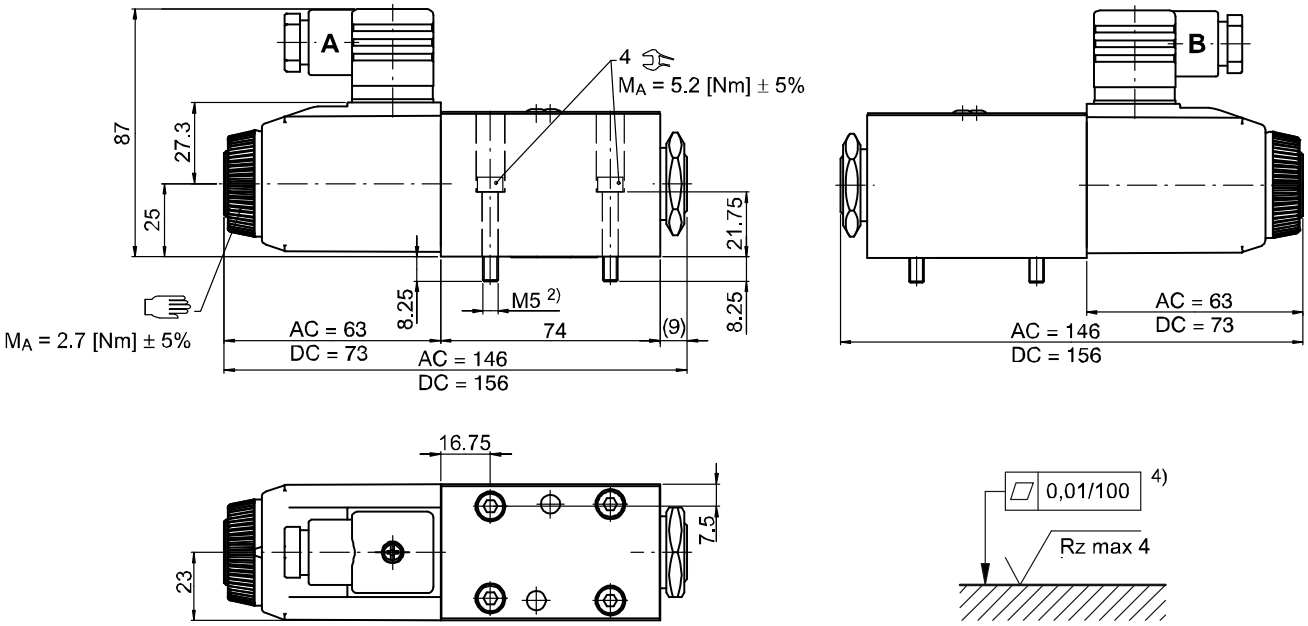

Seal kit FKM no. DS-150-V 3)

Item	Qty. 5)	Qty. 6)	Description
1	4	4	O-ring no. 012 ∅ 9,25 x 1,78 V70
2	1	2	O-ring no. 022 ∅25,12 x 1,78 V70
3	1	2	O-ring no. 213 ∅23,39 x 3,53 V70

IMPORTANT!

1) With manual override
2) Valve mounting bolts M5x30 (included in the delivery)
3) Seal kit with FKM (Viton) seals no. DS-150-V
4) Required surface finish on the mounting face (valve pad)
5) 4/2 valves (1 solenoid)
6) 4/3 valves (2 solenoid)

7 Ordering code

Ex. WEDO - 42 - G - 6 V - 1 24 D _

WEDO	=	directional valve, solenoid operated, direct acting
42	=	4/2 function (2 operating positions)
43	=	4/3 function (3 operating positions)
…	=	spool type / symbol see capture symbols / spool types
6	=	ISO size 03 interface
V	=	FKM (VITON) seals **(standard)** (special seals on request)
1 ... 9	=	design stage (omit when ordering new units)
...	=	voltage e.g. **24** (24 V)
D	=	current DC
A	=	current AC
(blank)	=	DIN EN 175301-803 connection with mating plug (**standard, IP 65**)
M100	=	DIN EN 175301-803 connection without mating plug Other additional plug-variants on request

8 Related data sheets

Reference	(Old no.)	Description
400-P-030501	(i-31)	Size 03 interface to ISO 4401-03-02

info.ch@bucherhydraulics.com www.bucherhydraulics.com

© 2026 by Bucher Hydraulics AG Frutigen, CH-3714 Frutigen
All rights reserved.
Data is provided for the purpose of product description only, and must not be construed as warranted characteristics in the legal sense. The information does not relieve users from the duty of conducting their own evaluations and tests. Because the products are subject to continual improvement, we reserve the right to amend the product specifications contained in this catalogue.

Classification: 430.300.-.315.305.300

4/2 and 4/3 Directional Spool Valves, ISO Size 03

Q_{max} = 40 l/min, p_{max} = 350 bar
Direct acting, soft switching, solenoid operated
Series WEDOU…

- For controlling the starting, stopping, and direction of a flow
- Manifold-mounting design, interface to ISO 4401-03-02
- Operated by DC or AC solenoids
- Very reliable functions and extremely stable
- With manual override
- Solenoid coils can be changed quickly and easily without leakage from hydraulics system.

1 Description

The WEDOU-…-6… series of directional spool valves are solenoid operated, direct acting, manifold-mounting valves with a size 03 interface to ISO 4401-03-02. The main components of the valves are a steel body, either one or two solenoids, the control spool, and either one or two return springs. In the non-operated state, the return springs hold the control spool in the middle position or initial position. The control spool is operated by the DC or AC solenoids, which are of the oil-immersed type. The integral manual override can be used to move the spool without energizing the coil, for example during a power failure. These 4/3 and 4/2 directional valves are used in plant and machines to control the direction of a flow, and to stop the flow. The slip-on coils can be replaced without opening the hydraulic envelope and can be positioned at any angle through 4x90°.

2 Symbols / Spool types

4/2 functions	4/2 functions with 4/3 spool types	4/2 functions with 4/3 spool types	4/3 functions
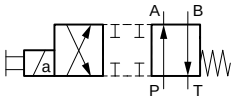 WEDOU-42-A…	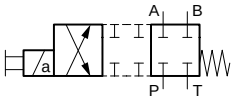 WEDOU-42-AD…	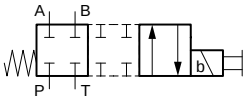 WEDOU-42-BD…	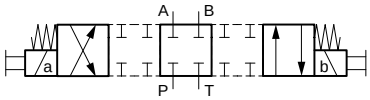 WEDOU-43-D…
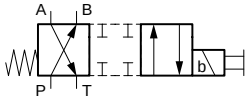 WEDOU-42-B…	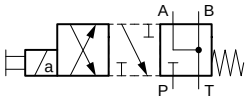 WEDOU-42-AG…	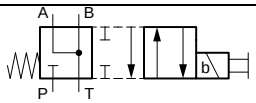 WEDOU-42-BG…	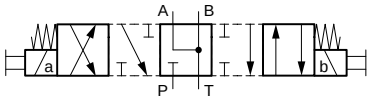 WEDOU-43-G…
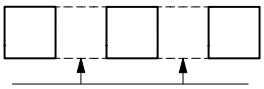 Crossover positions	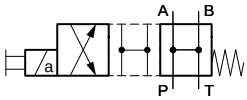 WEDOU-42-AH…	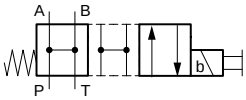 WEDOU-42-BH…	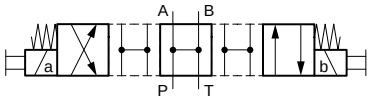 WEDOU-43-H…

NOTE! Other spool types on request.

WWW.SUMY.IR

3 Technical data

General characteristics		Description, value, unit
Designation		4/2 and 4/3 directional spool valves
Design		flange design, direct acting, soft switching, electrically operated
Mounting method		4 mounting holes for M5x30 mounting bolts (valve mounting bolts supplied with the valve)
Tightening torque		5.2 Nm ± 10 %
Size		size 03 interface to ISO 4401-03-02
Weight	- valve with one solenoid - valve with two solenoids	1.70 kg 2.10 kg
Mounting attitude		horizontal recommended (vertical mounting makes air bleeding difficult)
Ambient temperature range		-30 °C … +80 °C

Hydraulic characteristics		Description, value, unit
Maximum operating pressure	- ports A, B, P - port T	350 bar 100 bar
Maximum flow rate		40 l/min
Flow direction		see table “Symbols / Spool types”
Hydraulic fluid		HL and HLP mineral oil to DIN 51 524; HEES biodegradable fluids; for other fluids, please consult BUCHER
Hydraulic fluid temperature range		-30 °C … +80 °C
Viscosity range		10…500 mm^2/s (cSt), recommended 15...250 mm^2/s (cSt)
Minimum fluid cleanliness Cleanliness class to ISO 4406 : 1999		class 20/18/15

Electrical characteristics		Description, value, unit
Standard Supply voltage		12 V DC, 24 V DC (for other voltages, please consult BUCHER)
Supply voltage tolerance		± 10 %
Ambient temperature range		-20 °C … +50 °C
Nominal power consumption	DC	30/31 W
Relative duty cycle		100 %
Protection class to ISO 20 653 / EN 60 529		IP65 (with appropriate mating connector and proper fitting and sealing)
Electrical connection		DIN EN 175301-803, 3-pin 2 P+E (standard) for other connectors, see “Ordering code”

4 Performance graphs

measured with oil viscosity 33 mm^2/s (cSt), coil at steady-state temperature and 10 % undervoltage

Δp = f (Q) Pressure drop - Flow rate characteristic
A, B, D, G and H spool

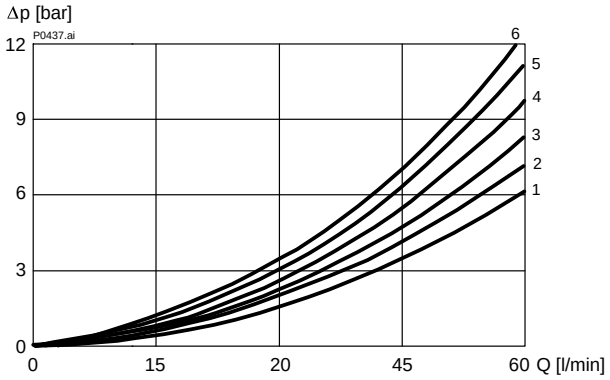

Spool type	Flow direction			
	P ⇒ A	B ⇒ T	P ⇒ B	A ⇒ T
A	6	5	6	5
B	6	5	6	5
D	5	2	5	2
G	6	1	6	1
H	4	2	4	2

p = f (Q) Performance limits - wIth DC-solenoid coil operating at 50 Hz

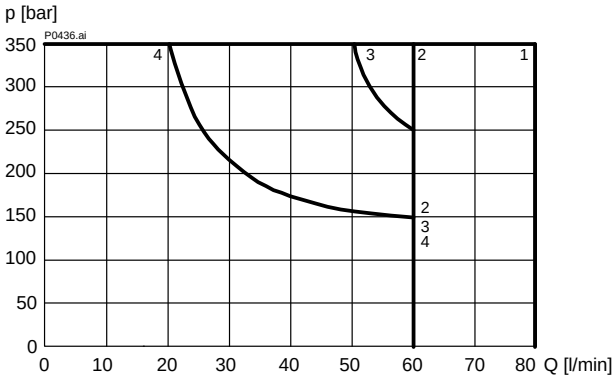

Spool type	Flow direction
A	3
B	3
D	1
G	4
H	2

IMPORTANT!
The quored max. flow rates apply when symmetrical flows pass through the valve.
For non-symmetrical flows, the max. flows are substantially reduced, in worst cases to only 33% of the above valves.

Switching times

measured with D spool and standard orifice Ø 0.7 mm,
at Q = 20 l/min, p = 210 bar
100% voltage, oil temperature +38° C, viscosity 21 cSt.

SWITCHING TIME	
ON [ms]	AUS [ms]
625	550

Switching times are influenced by flow rate, pressure, viscosity, supply voltage and coil temperature.

To achieve switching times which are least influenced by variations in supply voltage and coil temperature, we recommend the use of our specially developed connector plug, type LRS (see data sheet 400-P-515101).

5 Installation information

ATTENTION!
Only qualified personnel with mechanical skills may carry out any maintenance work. Generally, the only work that should ever be undertaken is to check, and possibly replace, the seals. When changing seals, oil or grease the new seals thoroughly before fitting them.

IMPORTANT!
When fitting the valves, use the specified tightening torque for the mounting bolts. No adjustments are necessary, since the cartridges are set in the factory.

6 Dimensions & sectional view

4/3 spool valve (spring centred)

4/2 spool valve (pulse signal, detented)

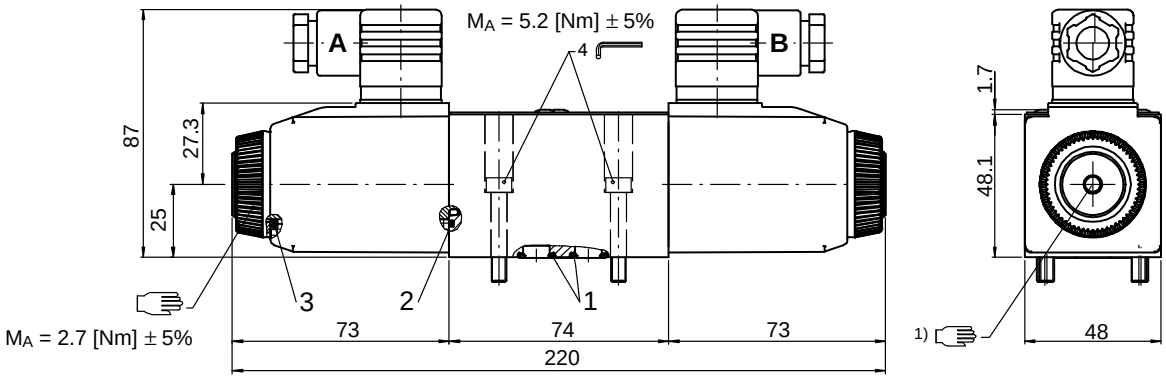

4/2 spool valve (1-solenoid model, A or B side)

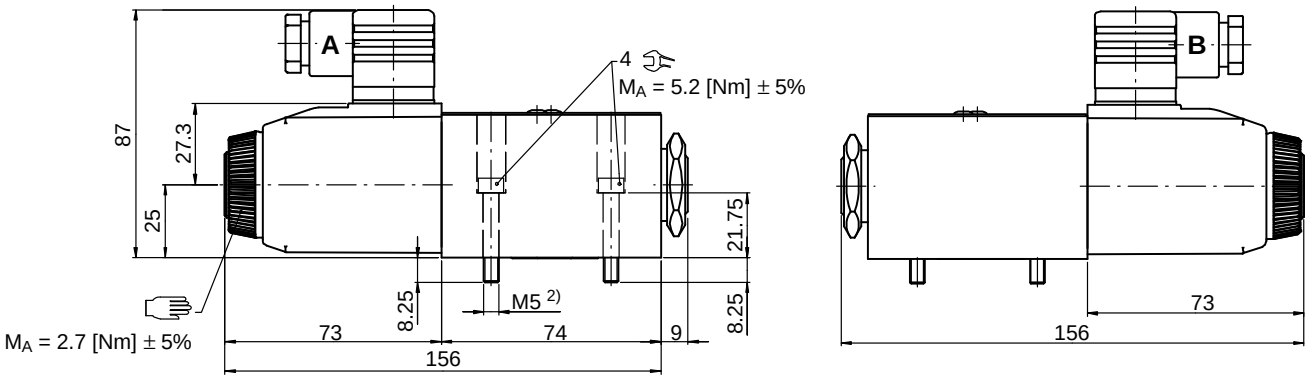

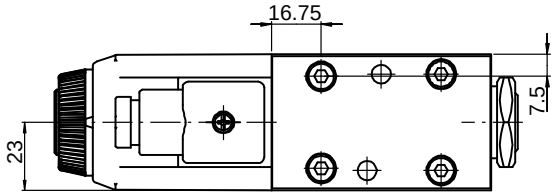

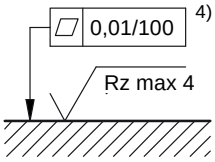

Seal kit NBR no. DS-225-V 3)

Item	Qty. 5)	Qty. 6)	Description
1	4	4	O-ring no. 012 ∅ 9,25 x 1,78 V70
2	1	2	O-ring no. 022 ∅25,12 x 1,78 V70
3	1	2	O-ring no. 213 ∅23,39 x 3,53 V70

IMPORTANT!

1) With manual override
2) Valve mounting bolts M5x30 (included in the delivery)
3) Seal kit with FKM (Viton) seals no. DS-225-V
4) Required surface finish on the mounting face (valve pad)
5) 4/2 valves (1 solenoid)
6) 4/3 valves (2 solenoid)

IMPORTANT!
When fitting the valves, use the specified tightening torque for the mounting bolts. No adjustments are necessary, since the cartridges are set in the factory.

7 Ordering code

Ex. WEDO U - 42 - G - 6 V - 1 24 D _

WEDO	=	directional valve, solenoid operated, direct acting
U	=	soft switching
42	=	4/2 function (2 operating positions)
43	=	4/3 function (3 operating positions)
…	=	spool type / symbol see capture symbols / spool types
6	=	ISO size 03 interface
V	=	FKM (Viton) seals **(standard)** (special seals on request)
1 ... 9	=	design stage (omit when ordering new units)
...	=	voltage e.g. 24 (24 V)
D	=	current DC
(blank)	=	DIN EN 175301-803 connection with mating plug (**standard, IP 65**)
M100	=	DIN EN 175301-803 connection without mating plug Other additional plug-variants on request

8 Related data sheets

Reference	(Old no.)	Description
400-P-030501	(i-31)	Size 03 interface to ISO 4401-03-02
400-P-515101		LRSA DIN plug

info.ch@bucherhydraulics.com www.bucherhydraulics.com

© 2024 by Bucher Hydraulics AG Frutigen, CH-3714 Frutigen
All rights reserved.
Data is provided for the purpose of product description only, and must not be construed as warranted characteristics in the legal sense. The information does not relieve users from the duty of conducting their own evaluations and tests. Because the products are subject to continual improvement, we reserve the right to amend the product specifications contained in this catalogue.

Classification: 430.300.-.315.305.300

4/2 and 4/3 Directional Spool Valves, ISO Size 03

Q_{max} = 40 l/min, p_{max} = 160 bar
Direct acting, solenoid operated
Series WEDL…

- „Low Watt“ model (8W)
- Manifold-mounting design, interface to ISO 4401-03-02
- Operated by DC or AC solenoids
- Very reliable functions and extremely stable
- With manual override
- Solenoid coils can be changed quickly and easily without leakage from hydraulics system

1 Description

The WEDC-…-4… series of directional spool valves are solenoid operated, direct acting, manifold-mounting valves with a size 02 interface to ISO 4401-02-01. The main components of the valves are a steel body, either one or two solenoids, the control spool, and either one or two return springs. In the non-operated state, the return springs hold the control spool in the middle position or initial position. The control spool is operated by the DC or AC solenoids, which are of the oil-immersed type. The integral manual override can be used to move the spool without energizing the coil, for example during a power failure. These 4/3 and 4/2 directional valves are used in plant and machines to control the direction of a flow, and to stop the flow. The slip-on coils can be replaced without opening the hydraulic envelope and can be positioned at any angle through 4x90°.

2 Symbols / Spool types

4/2 functions	4/3 functions		
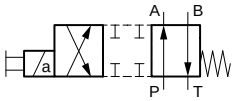 WEDL-42-A…	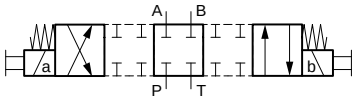 WEDL-43-D…		
	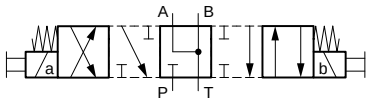 WEDL-43-G…		
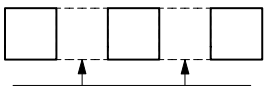 Crossover positions	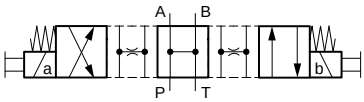 WEDL-43-H…		

NOTE! Other spool types on request.

WWW.SUMY.IR

3 Technical data

General characteristics		Description, value, unit
Designation		4/2 and 4/3 directional spool valves
Design		manifold mounting, direct acting, electrically operated
Mounting method		4 mounting holes for M5x30 mounting bolts (valve mounting bolts supplied with the valve)
Tightening torque		5.2 Nm ± 10 %
Size		size 03 interface to ISO 4401-03-02
Weight	- valve with one solenoid - valve with two solenoids	1.60 kg 2.10 kg
Mounting attitude		horizontal recommended (vertical mounting makes air bleeding difficult)
Ambient temperature range		-30 °C … +80 °C

Hydraulic characteristics		Description, value, unit
Maximum operating pressure	- ports A, B, P - port T	160 bar 210 bar (static)
Maximum flow rate		40 l/min
Flow direction		see table “Symbols / Spool types”
Hydraulic fluid		HL and HLP mineral oil to DIN 51 524; HEES biodegradable fluids; Other fluids on request!
Hydraulic fluid temperature range		-30 °C … +80 °C
Viscosity range		10…500 mm^2/s (cSt), recommended 15...250 mm^2/s (cSt)
Minimum fluid cleanliness Cleanliness class to ISO 4406 : 1999		class 20/18/15

Electrical characteristics		Description, value, unit
Supply voltage		24 V DC (50 … 60 Hz)
Supply voltage tolerance		+5 % / -10 %
Nominal power consumption	DC	8 W
Switching time bei 40 l/min. Und 100 bar		45 ms (energizing) 28 ms (de-energizing) Depending on pressure, flow rate, pressure drop and viscosity as well as dwell time under pressure, the switching times may vary from the the stated values.
Relative duty cycle		100 %
Protection class to ISO 20 653 / EN 60 529		IP65 (with appropriate mating connector and proper fitting and sealing)
Electrical connection		DIN EN 175301-803, 3-pin 2 P+E (standard) for other connectors, see “Ordering code”

4 Performance graphs

measured with oil viscosity 33 mm^2/s (cSt), coil at steady-state temperature and 10 % undervoltage

Δp = f (Q) Pressure drop - Flow rate characteristic
A, D, G and H spool

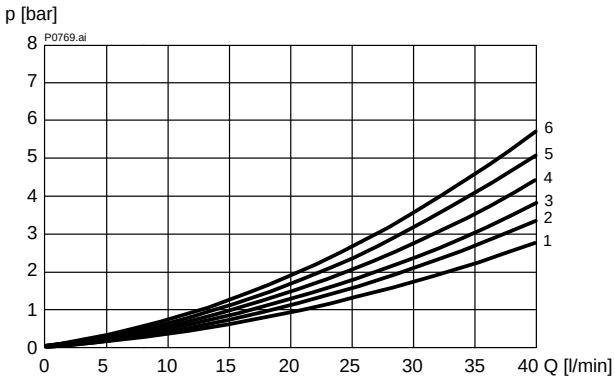

Spool type	Flow direction			
	P ⇒ A	B ⇒ T	P ⇒ B	A ⇒ T
A	6	5	6	5
D	5	2	5	2
G	6	1	6	1
H	4	2	4	2

p = f (Q) Performance limits - wIth DC-solenoid coil operating at 50 Hz

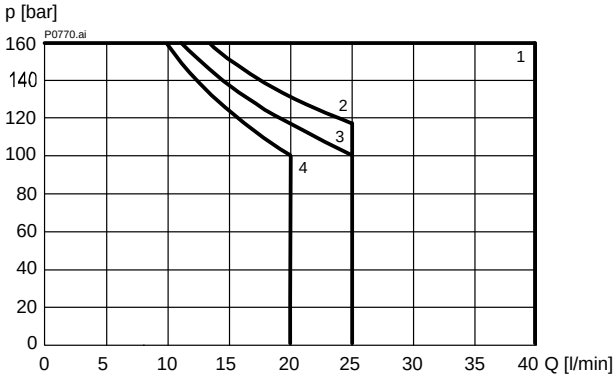

Spool type	Flow direction
A	1
D	1
G	3
H	1

IMPORTANT!
The quored max. flow rates apply when symmetrical flows pass through the valve.
For non-symmetrical flows, the max. flows are substantially reduced, in worst cases to only 33% of the above valves.

5 Installation information

ATTENTION!
Only qualified personnel with mechanical skills may carry out any maintenance work. Generally, the only work that should ever be undertaken is to check, and possibly replace, the seals. When changing seals, oil or grease the new seals thoroughly before fitting them.

IMPORTANT!
When fitting the valves, use the specified tightening torque for the mounting bolts. No adjustments are necessary, since the cartridges are set in the factory.

6 Dimensions & sectional view

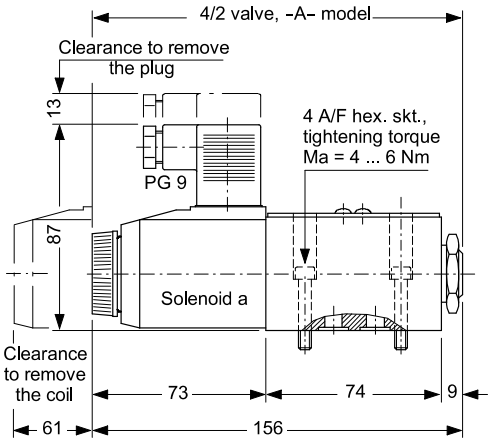

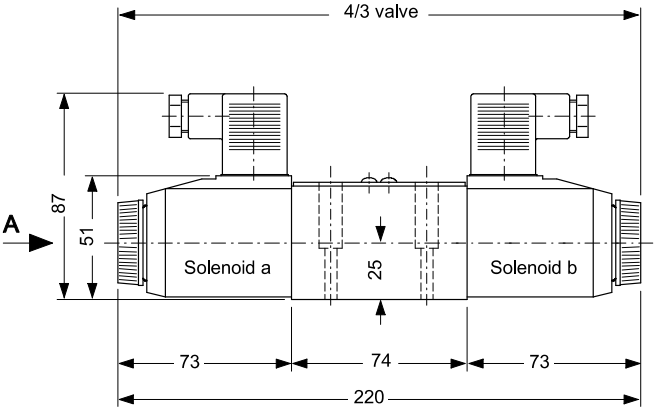

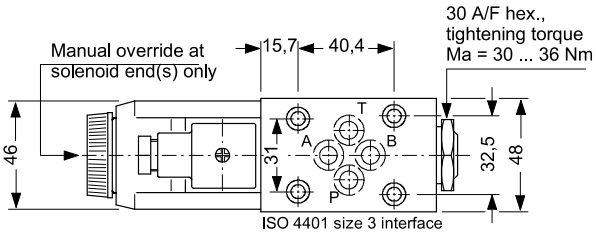

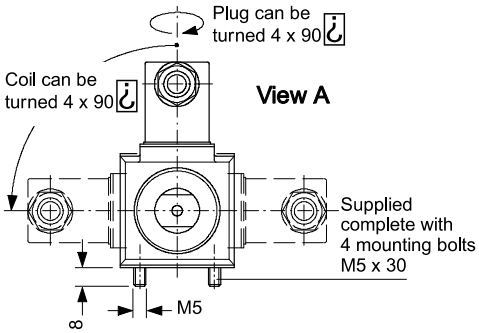

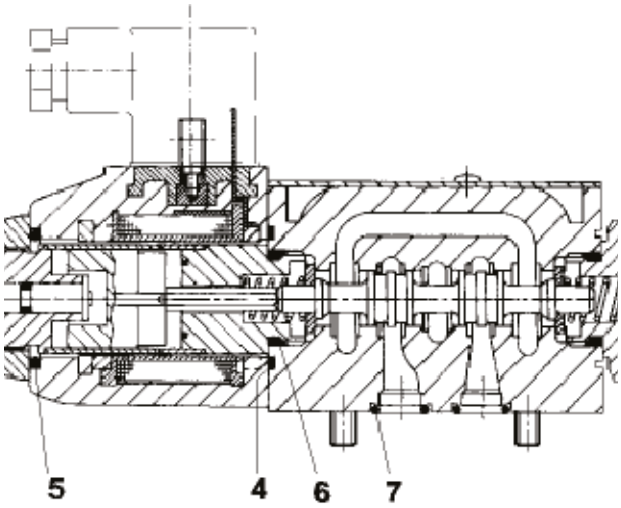

Seal kit NBR no. DS-150-V

Item	Qty.	Qty.	Description
4	2*	1**	O-ring no. 022 ∅ 25,12 x 1,78 V70
5	2*	1**	O-ring no. 213 ∅ 23,39 x 3,53 V70
6	2*	2**	O-ring no. 114 ∅ 15,54 x 2,62 V70
7	4*	4**	O-ring no. 012 ∅ 9,25 x 1,78 V70

* 4/3 valves
** 4/2 valves

IMPORTANT!
When fitting the valves, use the specified tightening torque for the mounting bolts. No adjustments are necessary, since the cartridges are set in the factory.

7 Ordering code

Ex. WED L – 42 – G – 6 V – 1 24 D _

WED	=	directional valve, solenoid operated, direct acting
L	=	“low−watt“−version
42	=	4/2 function (2 operating positions)
43	=	4/3 function (3 operating positions)
…	=	spool type / symbol see capture symbols / spool types
6	=	ISO size 03 interface
V	=	FKM (Viton) seals **(standard)** (spezial seals on request)
1 ... 9	=	design stage (omit when ordering new units)
...	=	voltage e. g. 24 (24 V)
D	=	current DC
(blank)	=	DIN EN 175301−803 connection with mating plug **(standard, IP 65)**
M100	=	DIN EN 175301−803 connection without mating plug Other additional plug−variants on request

8 Related data sheets

Reference	(Old no.)	Description
400-P-030501	(i-31)	Size 03 interface to ISO 4401-03-02
400-P-515101	(P-20)	LRSA DIN plug

info.ch@bucherhydraulics.com www.bucherhydraulics.com

© 2024 by Bucher Hydraulics AG Frutigen, CH-3714 Frutigen
All rights reserved.
Data is provided for the purpose of product description only, and must not be construed as warranted characteristics in the legal sense. The information does not relieve users from the duty of conducting their own evaluations and tests. Because the products are subject to continual improvement, we reserve the right to amend the product specifications contained in this catalogue.

Classification: 430.300.-.315.305.300

BUCHER hydraulics

WWW.SUMY.IR

Directional valve 4-way/2-position

Q_{max} = 30 l/min, p_{max} = 315 bar
direct acting, poppet type, switching solenoid
Type series: WESDB-42-AD-6...

- Plate mounting valve
- All external parts with zinc-nickel plating according to DIN EN ISO 19598
- Interface according to ISO 4401-03-02
- Seat tight shut-off
- Closed in the non-operated condition
- Leak-free shut-off function
- Optional with manual override
- Various plug-connector systems and voltages are available
- The slip-on coil can be rotated, and it can be replaced without opening the hydraulic envelope

Description

The 4-way/2-position solenoid-operated directional valves, series WESDB-42-AD-6..., are size 6 with interface according to ISO 4401-03-02. They are designed on the poppet/seat principle, and are therefore virtually leak-free. All external parts of the cartridge are zinc-nickel plated and are thus suitable for use in the harshest operating environments. The slip-on coils can be replaced without opening the hydraulic envelope and can be positioned at any angle through 360°. These valves are primarily used as pilot valves in certain mobile and industrial applications where leak-tight shut-off functions are crucially important. Examples are where loads, tensions, or clamping forces must be held without leakage. For self-assembly, please refer to the section related datasheets.

Symbol

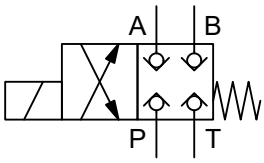

WWW.SUMY.IR

Technical data

General characteristics	Description, value, unit
Function group	Directional valve
Function	4-way/2-position
Design	Plate mounting valve
Controls	switching solenoid
Characteristic	direct acting, poppet type
MTTFd value	150 years
Construction size	NG 6
Mounting attitude	unrestricted
Weight	2 kg
Interface according to	ISO 4401-03-02
Tightening torque steel	5.2 Nm
Tightening torque aluminium	5.2 Nm
Tightening torque tolerance	± 10 %
Minimum ambient temperature	- 30 °C
Maximum ambient temperature	+ 50 °C
Surface protection	All external parts with zinc-nickel plating according to DIN EN ISO 19598
Sealing material	see ordering code
Seal kit order number	NBR: DS-463-N / FKM-DS-463-V

Hydraulic characteristics	Description, value, unit
Maximum operating pressure	315 bar
Maximum flow rate	30 l/min
Flow direction	see symbol
Hydraulic fluid	HL and HLP mineral oil according to DIN 51 524; other fluids on request!
Minimum fluid temperature	- 30 °C
Maximum fluid temperature	+ 80 °C
Viscosity range	10 ... 500 mm^2/s (cSt)
Recommended viscosity range	15 ... 250 mm^2/s (cSt)
Minimum fluid cleanliness (cleanlineless class according to ISO 4406:1999)	class 20/18/15

Electric characteristics	Description, value, unit
Actuator type	solenoid coil
Solenoid coils type	D45/207
Supply voltage DC	12/24 V DC
Supply voltage AC	115/230 (50 ... 60 Hz) V AC
Supply voltage tolerance	± 10 %
Nominal power consumption	VDC = 30...32 W / VAC = 31...32 W
Switching time	Switching time measured at: UN; Δp = 250 bar; Q = 24l/min; TAmbient = 20 °C; ϑ = 46 mm2/s 80 ms (energizing) 40 ms (de-energizing)

WWW.SUMY.IR

Electric characteristics	Description, value, unit
Relative duty cycle	100 %
Electrical connection coil	several connection types available, see ordering code
Protection class solenoid coil to ISO 20 653 / EN 60 529	IP 65 / IP 67 / IP 69K, see “Ordering code” (with appropriate mating connector and proper fitting and sealing)

NOTE!
The switching time can be strongly influenced by flow rate, pressure, viscosity, and the dwell period under pressure. In practice, the switching time may therefore deviate from the specified value range.

Performance graphs

measured with oil viscosity 33.0 mm²/s (cSt)

p = f (Q) Performance limit

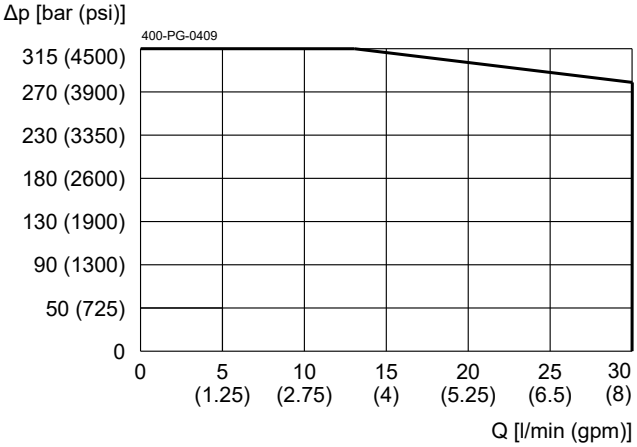

p = f (Q) Pressure-flow rate

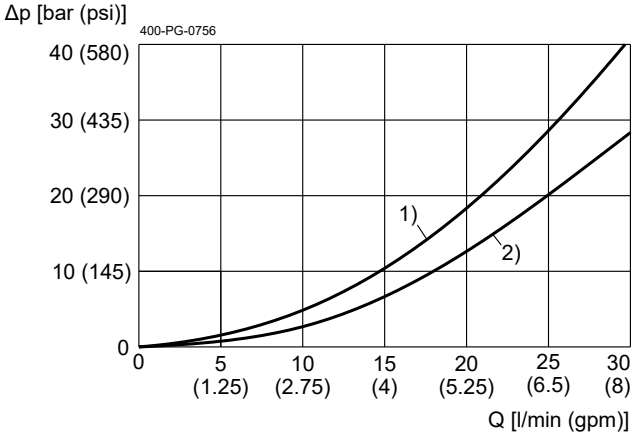

1) = P→B
2) = A→T

Dimensions and sectional view

Beispiel für die Masseinheit:
Exampel for the dimensional units:

0.79	= 0.79 mm	millimeter
(.031)	= 0.031"	inch

Ohne Handnotbetaetigung "O"
without manual override "O"

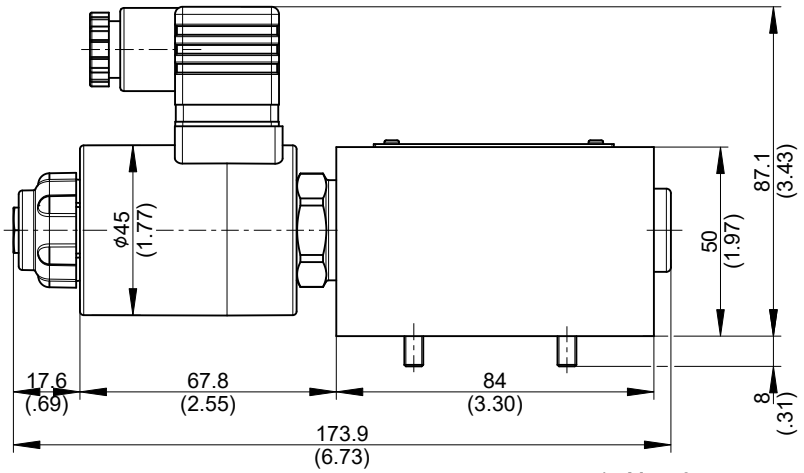

Mit Handnotbetaetigung "P"
with manual override "P"

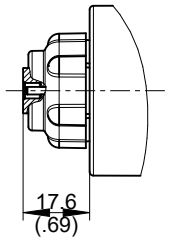

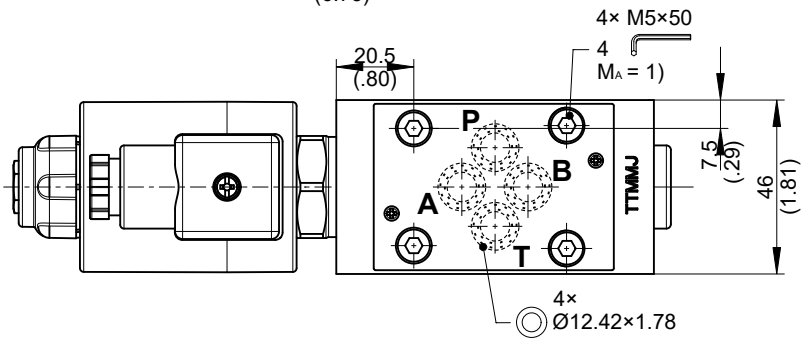

Mit Handnotbetaetigung schraubbar "S"
with screw-in manual override "S"

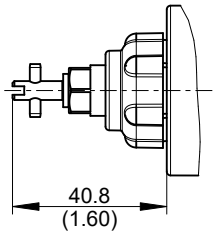

Installation information

IMPORTANT!
1) Fixing screws, strength class 8.8, are included in the scope of delivery. When fitting use the specified tightening torque. The value can be found in the chapter "Technical data".

ATTENTION!
Only qualified personnel with mechanical skills may carry out any maintenance work. Generally, the only work that should ever be undertaken is to check, and possibly replace, the seals. When changing seals, oil or grease the new seals thoroughly before fitting them.

NOTE!
The seals are not available individually. The seal kit order number can be found in the chapter "Technical data".

BUCHER hydraulics
WWW.SUMY.IR

Ordering code

Ex. W E S D B - 42 - AD - 6 O - N - 1 24 D _

W	=	directional valve
E	=	electrically operated, D45/207, 30...32 W
S	=	seat valve
D	=	direct acting
A ... Q	=	standard model according to valid data sheet
Z ... R	=	special model (on request)
42	=	4-way/2-position
AD	=	spooltype AD, de-energized closed
6	=	nominal size 6
O	=	without manual override **(standard)**
P	=	with manual override
S	=	with screwable manual override
N	=	NBR (nitril-butadien-rubber / BUNA) seals **(standard)**
V	=	FKM (fluorocarbon rubber / VITON) seals (special seals on request)
1 ... 9	=	technical design no. (omit by ordering)
…	=	voltage e.g. 24 (24 V)
D	=	current DC
A	=	current AC

(blank)	=	DIN EN 175301-803 connection	3-pole 2 P+E **(standard)**	(IP 65)	with mating plug
M100	=	DIN EN 175301-803 connection	3-pole 2 P+E	(IP 65)	mating plug not supplied
JT	=	Junior Timer plug connection	2-pole radial, with protection diode	(IP 65)	mating plug not supplied
D	=	Deutsch plug connection DT04-2P	2-pole 45°	(IP 67/69K)	mating plug not supplied
DT	=	Deutsch plug connection DT04-2P	2-pole 45°, with protection diode	(IP 67/69K)	mating plug not supplied
		other plug-variants, please consult BUCHER.			

IMPORTANT!
Not every combination of voltage values, current type and plug connections available.

Related data sheets

Reference	Description
400-P-030501	Interface ISO 4401-03... (Size 6)
400-P-120120	Solenoid coil D45/207
400-P-126210	4-way/2-position WS42GNA-8...
400-P-010101	MTTFd Values for Hydraulic Valves

info.ch@bucherhydraulics.com **www.bucherhydraulics.com**

© 2025 by Bucher Hydraulics AG Frutigen, 3714 Frutigen, Switzerland

All rights reserved.
Data is provided for the purpose of product description only, and must not be construed as warranted characteristics in the legal sense. The information does not relieve users from the duty of conducting their own evaluations and tests. Because the products are subject to continual improvement, we reserve the right to amend the product specifications contained in this catalogue.

4/3 and 4/2 Directional Spool Valves, ISO Size 03

Q_{max} = 100 l/min, p_{max} = 350 bar
Two stage, solenoid operated
Series WEVDK…

- High switching reliability thanks to 2-stage follower spool operation
- Manifold-mounting design, interface to ISO 4401-03-02
- Operated by switching or proportional solenoids
- Very reliable functions and extremely stable
- With manual override
- All exposed parts with zinc-nickel plating
- High pressure wet-armature solenoids
- The slip-on coil can be rotated and it can be replaced without opening the hydraulic envelope

1 Description

Series WEVDK ...-6 high performance spool valves are internally piloted and use the follower spool principe. The main valve components are a cast body, a spring-centered follower spool assembly and wet armature solenoids with pressure-tight core tube and slip-on coil. These valves provide reliable service even under the severest operating conditions such as very high flow rates, high operating pressures, supply voltage drops, long periods without switching, large and sudden changes in fluid temperature etc. The highly effective spool actuation method combines the advantages of direct acting and two-stage solenoid valves, without incurring the well known disadvantages of either type. The main spool is offset by both the solenoid force and the P % T *) pressure difference inside the valve. The greater the P % T pressure difference, the greater the offsetting force. The spool is returned to the mid-position in the same way, using the P % T pressure difference and without the need for the usual heavy centering springs. If very low flow rates, or an open circuit condition, result in there being no P % T pressure difference, then the spool actuaction reverts to the normal solenoid / centering spring arrangement. The manual over-ride, which is fitted as standard equipment to all valves, can be operated even when high tank line back-pressures exist in the core tube.
*) The pressure in P must always be equal to, or greater than, that in T and the valve must be connected in the conventional manner i.e. pressure to P, T to tank. All external parts of the valve are zinc-nickel plated to DIN 50 979 and are thus suitable for use in the harshest operating environments. The slip-on coils can be replaced without opening the hydraulic envelope and can be positioned at any angle through 360°.

2 Symbols / Spool types

4/2 functions	4/2 functions with 4/3 spools	4/2 functions with 4/3 spools	4/3 functions
WEVDK-42-A-6 1 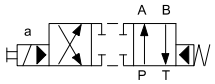	WEVDK-42-AD-6 5 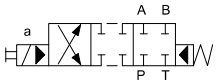	WEVDK-42-BD-6 8 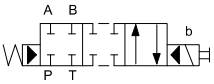	WEVDK-43-D-6 11 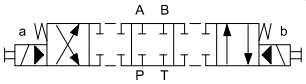
WEVDK-42-B-6 2 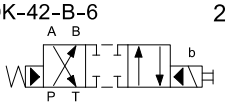	WEVDK-42-AG-6 6	WEVDK-42-BG-6 9 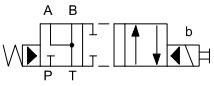	WEVDK-43-G-6 12 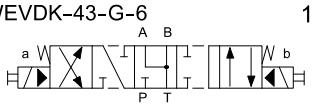
Crossover transients 3 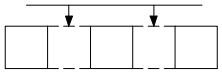	WEVDK-42-AH-6 7 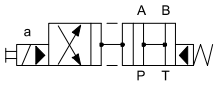	WEVDK-42-BH-6 10 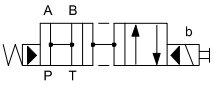	WEVDK-43-H-6 13 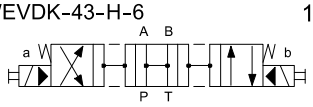
WEVDK-42-C-6 4 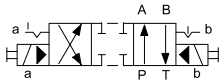			

NOTE! Other spool types on request.

WWW.SUMY.IR

3 Technical data

General characteristics		Description, value, unit
Designation		4/3 and 4/2 directional spool valves
Design		flange design, pilot operated, electrically operated
Mounting method		4 mounting holes for M5x30 mounting bolts (valve mounting bolts supplied with the valve)
Tightening torque		5.2 Nm ± 5 %
Size		size 03 interface to ISO 4401-03-01
Weight	- valve with one solenoid - valve with two solenoids	1.60 kg 2.10 kg
Mounting attitude		unrestricted (vertical makes air bleeding difficult)

Hydraulic characteristics		Description, value, unit
Maximum operating pressure	- ports A, B, P - port T	350 bar 80 bar (static)
Maximum flow rate		100 l/min
Flow direction		see table “Symbols / Spool types”
Hydraulic fluid		HL and HLP mineral oil to DIN 51 524; for other fluids, please contact BUCHER
Ambient temperature range		-30 °C … +50 °C
Hydraulic fluid temperature range		-30 °C … +80 °C
Viscosity range		10…500 mm^2/s (cSt), recommended 15...250 mm^2/s (cSt)
Minimum fluid cleanliness Cleanliness class to ISO 4406 : 1999		class 20/18/15

Electrical characteristics	Description, value, unit
Supply voltage	12 V DC, 24 V DC, 115 V AC, 230 V AC (40 … 60 Hz) (Other voltages on request)
Supply voltage tolerance	± 10 %
Nominal power consumption	12 V DC = 30 W / 24 V DC = 31 W 115 V AC = 32 W / 230 V AC = 31 W
Relative duty cycle	100 %
Protection class to ISO 20 653 / EN 60 529	IP 65 to DIN 40050
Electrical connection	3-pin square plug rotatable 4x90° to DIN 43650 / ISO 4400

4 Performance graphs

measured with oil viscosity 33 mm^2/s (cSt)

A, C, D, G and H spool

Δp = f (Q) Pressure drop - Flow rate characteristic

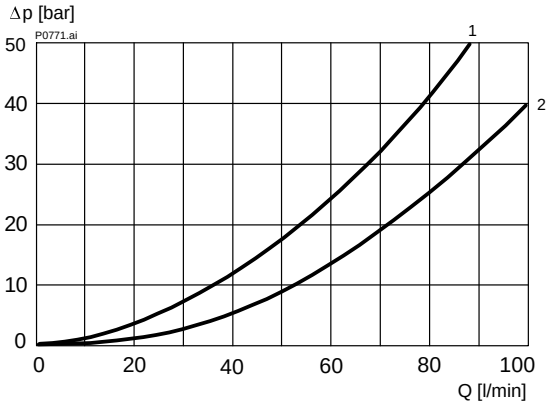

Operated position

Spool type	Flow direction						
	P ⇒ A	B ⇒ T		P ⇒ B	A ⇒ T		P ⇒ T
		Solenoid OFF	Solenoid ON		Solenoid OFF	Solenoid ON	
A	2	1	–	2	–	1	–
C	2	1	–	2	–	1	–
D	2	–	1	2	–	1	–
G	2	1	1	2	1	1	–
H	2	1	2	2	1	2	–

IMPORTANT!

The quored max. flow rates apply when symmetrical flows pass through the valve.
For non-symmetrical flows, the max. flows are substantially reduced, in worst cases to only 33% of the above valves.

Switching times

measured with D spool, at Q = 40 l/min, p = 100 bar
100% voltage, oil temperature +38° C, viscosity 21 cSt.

SWITCHING TIME	
ON [ms]	AUS [ms]
100 … 350	180 … 550

Switching times are influenced by flow rate, pressure, viscosity, supply voltage and coil temperature.

To achieve switching times which are least influenced by variations in supply voltage and coil temperature, we recommend the use of our specially developed connector plug, type LRS (see data sheet 400-P-515101).

5 Installation information

ATTENTION!
Only qualified personnel with mechanical skills may carry out any maintenance work. Generally, the only work that should ever be undertaken is to check, and possibly replace, the seals. When changing seals, oil or grease the new seals thoroughly before fitting them.

IMPORTANT!
When fitting the valves, use the specified tightening torque for the mounting bolts. No adjustments are necessary, since the cartridges are set in the factory.

6 Dimensions & sectional view

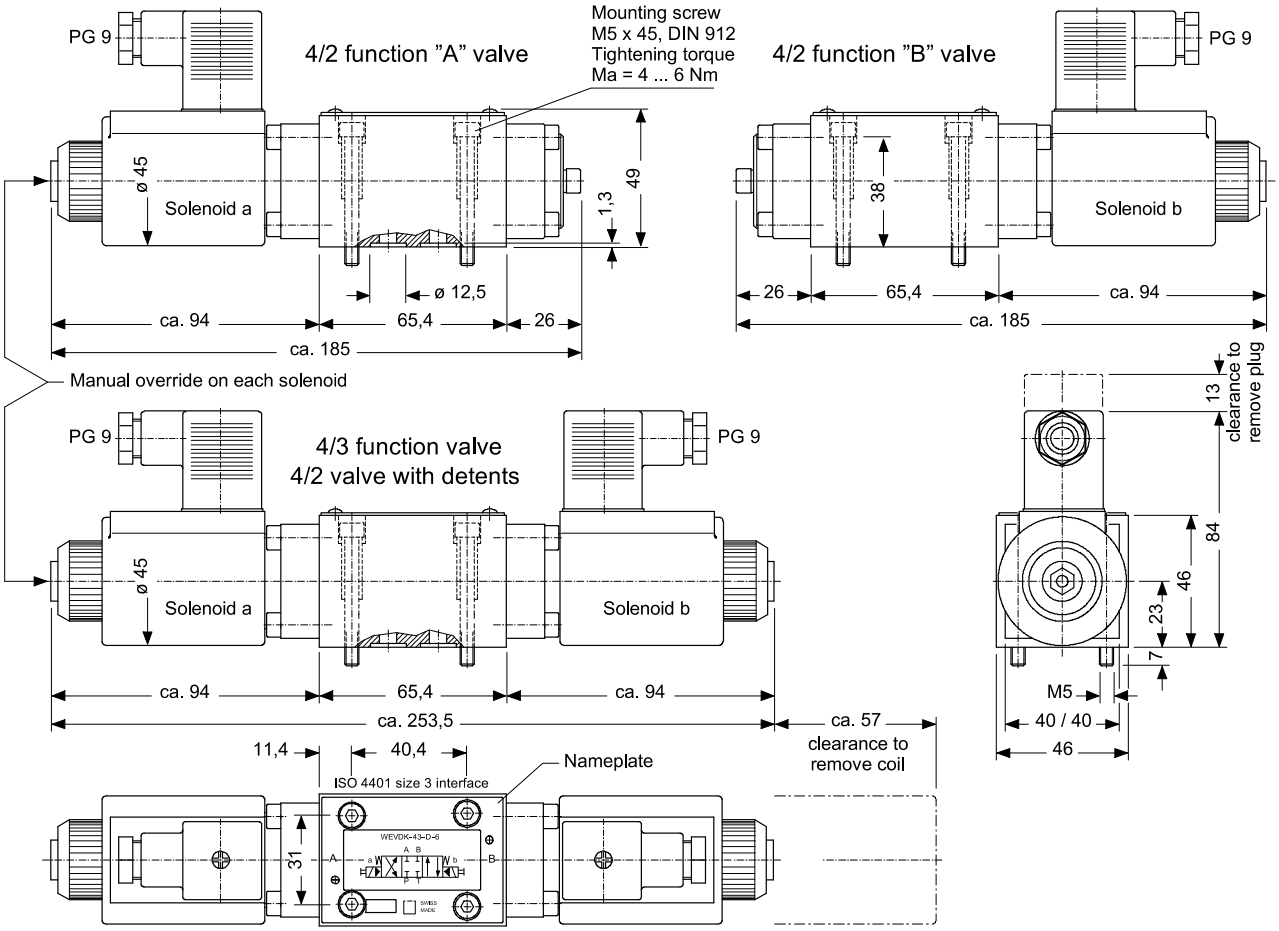

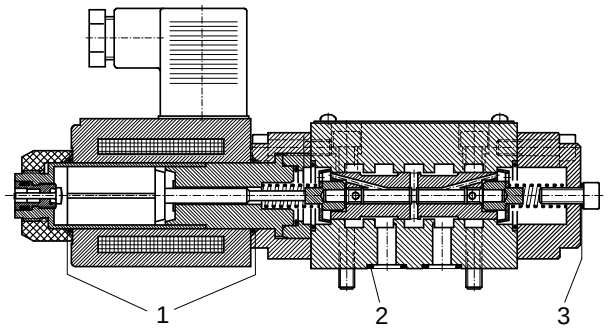

Seal kit NBR no. DS-067

Item	Qty.	Qty.	Description
1	4*	2**	O-ring no. 019 ∅ 20,35 x 1,78 N70
2	4*	4**	O-ring no. 012 ∅ 9,25 x 1,78 N90
3	–*	1**	Cooper ring ∅ 8,00/5,50 x 1,00 DIN7603A

* 4/3 valves (2 solenoids)
** 4/2 valves (1 solenoid), 4/2 valves with detents (2solenoids)

7 Ordering code

Ex. WE VD K - 43 - G - 6 _ - 1 24 D _

WE = Electrically actuated directional valve
VD = two-stage and direct acting
A … Q = standard model per current data sheet
Z … R = special features on request
43 = 4/3 function
42 = 4/2 function
A = 4/2 function, solenoid at A end
B = 4/2 function, solenoid at B end
C = 4/2 function with detents at spool end positions, solenoids at both ends
AD, AG, AH = 4/2 function with 4/3 spool, solenoid at A end
BD, BG, BH = 4/2 function with 4/3 spool, solenoid at B end
D, G, H = 4/3 function, solenoid at both ends
6 = ISO 4401 size 3 interface
blank = NBR (nitril-butadien-rubber / BUNA) seals **(standard)**
V = FKM (fluorocarbon rubber / VITON) seals
(special seals on request)
1 … 9 = technical design no. (omit by ordering)
… = voltage e.g. 24 (24 V)
D = current DC
A = current AC
(blank) = DIN EN 175301-803 connection, 3-pole 2 P+E, with mating plug, IP 65 **(standard)**
M100 = DIN EN 175301-803 connection, 3-pole 2 P+E, mating plug not supplied
Other additional plug-variants on request

8 Related data sheets

Reference	(Old no.)	Description
400-P-030501	(i-31)	Size 03 interface to ISO 4401-03-02
400-P-515101	(P-20)	LRSA DIN plug
400-P-120120		Solenoid coil D45/207

info.ch@bucherhydraulics.com www.bucherhydraulics.com

© 2024 by Bucher Hydraulics AG Frutigen, CH-3714 Frutigen
All rights reserved.
Data is provided for the purpose of product description only, and must not be construed as warranted characteristics in the legal sense. The information does not relieve users from the duty of conducting their own evaluations and tests. Because the products are subject to continual improvement, we reserve the right to amend the product specifications contained in this catalogue.

Classification: 430.300.-.315.305.300

High performance directional valve, ISO size 05

Q_{max} = 160 l/min, p_{max} = 315 bar
Solenoid controlled, 2-stage
Series WEVDE…

- High switching reliability thanks to 2-stage follower spool operation
- Unaffected by:
  - asymmetric flow path
  - long periods under high pressure without switching
  - large pressure drops across the spool lands
  - low supply voltage
- High flow rates
- Good Δp-Q characteristics
- Pressure in P, A and B to 315 bar
- Wet armature design, change coils without opening hydraulic envelope
- With manual override
- For subplate mounting, Interface ISO size 05 to ISO 4401-05-04

1 Description

Series WEVDE ...-10 high performance spool valves are internally piloted and use the follower spool principle. The main valve components are a cast body, a spring-centered follower spool assembly and wet armature solenoids with pressure-tight core tube and slip-on coil. These valves provide reliable service even under the severest operating conditions such as very high flow rates, high operating pressures, supply voltage drops, long periods without switching, large and sudden changes in fluid temperature etc. The highly effective spool actuation method combines the advantages of direct acting and two-stage solenoid valves, without incurring the well known disadvantages of either type. The main spool is offset by both the solenoid force and the P ⇒ T *) pressure difference inside the valve. The greater the P ⇒ T pressure difference, the greater the offsetting force. The spool is returned to the mid-position in the same way, using the P ⇒ T pressure difference and without the need for the usual heavy centering springs. If very low flow rates, or an open circuit condition, result in there being no P ⇒ T pressure difference, then the spool actuaction reverts to the normal solenoid / centering spring arrangement.
*) The pressure in P must always be equal to, or greater than, that in T and the valve must be connected in the conventional manner i.e. pressure to P, T to tank.

2 Symbols

4/2 FUNCTIONS	4/2 FUNCTIONS WITH 4/3 SPOOLS	4/2 FUNCTIONS WITH 4/3 SPOOLS	4/3 FUNCTIONS
WEVDE-42-A-10 1 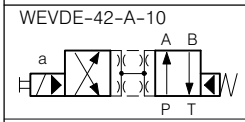	WEVDE-42-AD-10 4 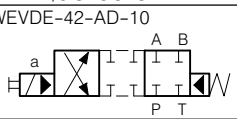	WEVDE-42-BD-10 7 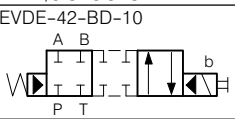	WEVDE-43-D-10 10 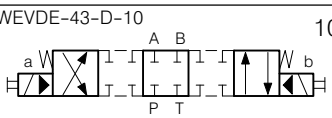
WEVDE-42-B-10 2 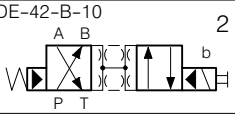	WEVDE-42-AG-10 5 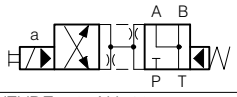	WEVDE-42-BG-10 8 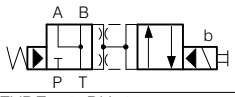	WEVDE-43-G-10 11 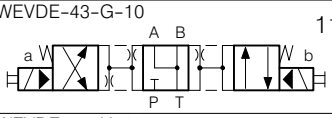
Crossover transients 3 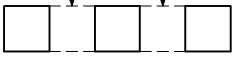	WEVDE-42-AH-10 6 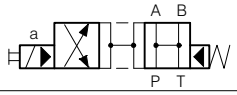	WEVDE-42-BH-10 9 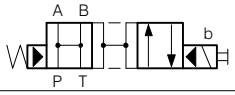	WEVDE-43-H-10 12 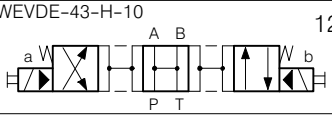

NOTE! Other spool types on request.

WWW.SUMY.IR

3 Technical data

General characteristics	Description, value, unit
Designation	4/2 and 4/3 solenoid controlled spool valves
Design	combined direct acting and 2-stage
Mounting method	mainfold mounting
Size	nominal size 10 mm, 4401-05-04 size 5 interface
Mass	1 solenoid = 4.8 kg 2 solenoids = 6.3 kg
Mounting attitude	horizontal recommended (vertical mounting makes air bleeding difficult)

Hydraulic characteristics	Description, value, unit
Maximum operating pressure	P, A and B 315 bar
Maximum return pressure	160 bar
Maximum flow rate	160 l/min
Flow direction	see symbols
Hydraulic fluid	HL and HLP mineral oil to DIN 51 524; for other fluids, please contact BUCHER
Hydraulic fluid temperature range	-30 °C … +80 °C
Ambient temperature range	-30 °C … +50 °C
Viscosity range	10…500 mm^2/s (cSt), recommended 15...250 mm^2/s (cSt)
Minimum fluid cleanliness Cleanliness class to ISO 4406 : 1999	class 20/18/15

Electrical characteristics	Description, value, unit
Actuator type	solenoid coil
Solenoid coils type	pressure-tight wet armature design (slip-on coil system)
Supply voltage	12 V DC, 24 V DC, 98 V DC, 196 V DC (Other voltages on request) 196 V DV: DIN (can be used with rectifier for 230 AC)
Supply voltage tolerance	± 10 %
Nominal power consumption	39 W
Relative duty cycle	100 %
Protection class to ISO 20 653 / EN 60 529	IP 65 to DIN 40050
Electrical connection	3-pin square plug rotatable 4x90° to DIN 43650 / ISO 4400

4 Performance graphs

measured with oil viscosity 33 mm²/s (cSt)

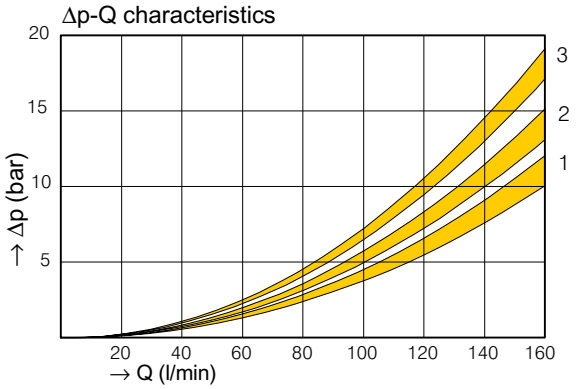

	P ⇒ A	B ⇒ T	P ⇒ B	A ⇒ T	P ⇒ T
A spool	3	3	2	1	–
D spool	1	2	1	1	–
G spool	1	3	1	2	–
H spool	1	2	2	2	–

Switching times
measured with: 24 VDC solenoid 5% under-voltage, coil at steady-state temperature.

Solenoid ON	45 ... 110 ms
Solenoid OFF	20 ... 50 ms

These are guideline values only, and can be significantly affected by flow rate and pressure.

To achieve switching times which are largely unaffected by variations in supply voltage and coil temperature, we recommend our type LRS Power Reducing connector plug. Contact BUCHER for application assistance.

5 Installation information

ATTENTION!

All installation and servicing must be carried out with care, and by qualified personnel only. When servicing valves (cleaning, changing seals, etc.) note the following:
A (and B) spools must not be reversed, or the function P ⇒ A / B ⇒ T will become P ⇒ B / A ⇒ T (and vice versa). All other spools are symmetrical but should always be reassembled with their original orientation, in any case.

IMPORTANT!: When changing seals, the new seals should be thoroughly oiled or greased before fitting them to the valve.

IMPORTANT!: Use the correct tightening torque when fitting Spring cap, DC and Core tube.

IMPORTANT!: At installation, be sure to mount the valve with its hydraulic ports mating with those of the manifold block or subplate and, finally, use the correct tightening torque for the 4 x M6 mounting screws.

6 Dimensions & sectional view

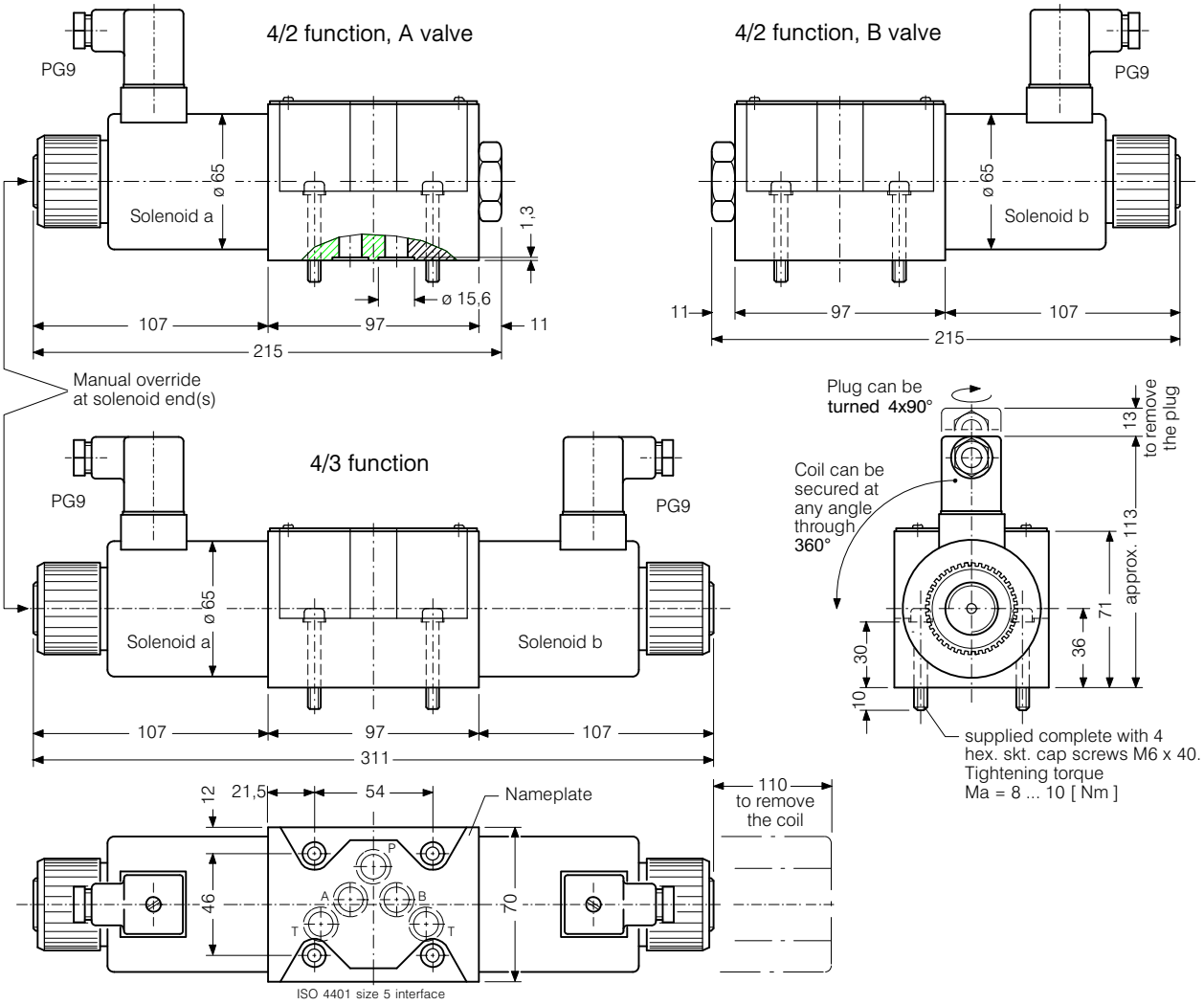

7 Schematic section

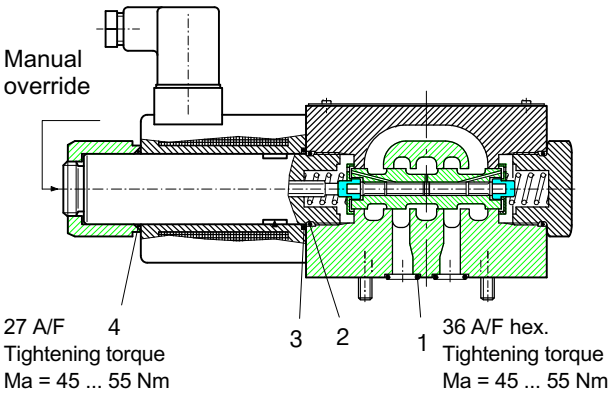

Sealkit no. DS-146, comprising:

Itm.	Qty.	Description	Size
1	5	O-ring no. 014	∅ 12,42 x 1,78 N90
2	2	O-ring no. 118	∅ 21,89 x 2,62 N90
3	2	O-ring	∅ 30,00 x 2,00 N70
4	2	O-ring	∅ 30,00 x 2,00 N70

8 Ordering code

Ex. WE VD E - 43 - G - 10 _ - 1 24 D _

WE = Electrically actuated directional valve
VD = two-stage and direct acting
A … Q = standard model per current data sheet
Z … R = special features on request
42 = 4/2 function
43 = 4/3 function
A = 4/2 function, solenoid at A end
B = 4/3 function, solenoid at B end
AD, AG, AH = 4/2 function with 4/3 spool, solenoid at A end
BD, BG, BH = 4/2 function with 4/3 spool, solenoid at B end
D, G, H = 4/3 function, solenoid at both ends
10 = ISO 4401 size 5 interface
blank = NBR (nitril-butadien-rubber / BUNA) seals **(standard)**
V = FKM (fluorocarbon rubber / VITON) seals (special seals on request)
1 … 9 = technical design no. (omit by ordering)
… = voltage e.g. 24 (24 V)
D = current DC
blank = DIN EN 175301-803 connection, 3-pole 2 P+E, with mating plug, IP 65 **(standard)**
M100 = DIN EN 175301-803 connection, 3-pole 2 P+E
JT = Junior Timer radial plug connection (with protection diode, IP 65)
DT = Deutsch plug connection (with protection diode, IP 67/69K) (only 12 and 24 V DC)
} mating plug not supplied

9 Related data sheets

Reference	Description
400-P-050101	Size 05 interface to ISO 4401-05-04
400-P-515101	LRSA DIN plug

info.ch@bucherhydraulics.com www.bucherhydraulics.com

© 2024 by Bucher Hydraulics AG Frutigen, CH-3714 Frutigen
All rights reserved.
Data is provided for the purpose of product description only, and must not be construed as warranted characteristics in the legal sense. The information does not relieve users from the duty of conducting their own evaluations and tests. Because the products are subject to continual improvement, we reserve the right to amend the product specifications contained in this catalogue.

Classification: 430.300.300.305.305

BUCHER
hydraulics
WWW.SUMY.IR

Solenoid Operated Spool Valve, ISO size 5
Direct Acting
Series WEDE ...

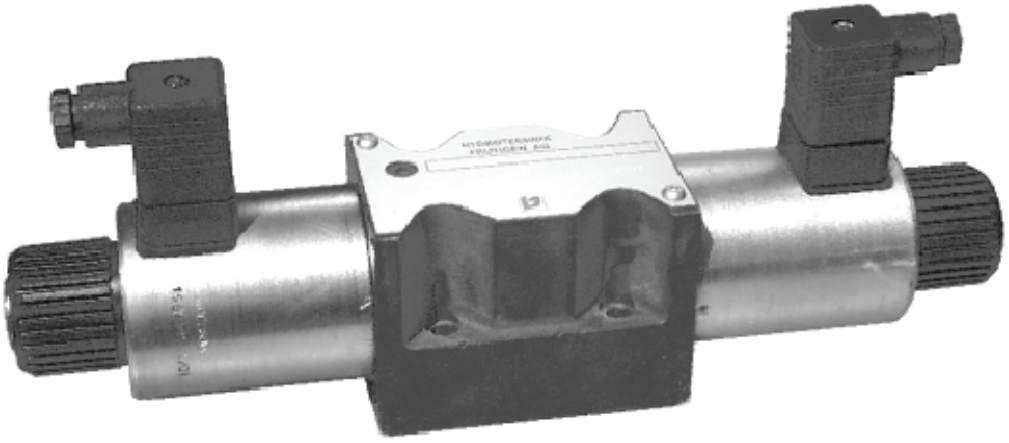

- 315 bar, 120 l/min
- Special opening geometry, high switching performance
- High flow rates
- Good Δp-Q values: no narrowing of flow paths in energised position
- Slip-on coils: coils can be changed without opening the hydraulic envelope.
- Mounting interface to ISO 4401 / CETOP R35H size 5, NFPA D05, DIN 24 340 A10

1. Description

Series WEDE ...-10 solenoid operated spool valves are direct acting units. The principal components of the valve are a cast body, a spool with centering springs and wet armature solenoids with high-pressure core tubes and slip-on coils. A coil can be replaced or the voltage changed without opening the hydraulic envelope. These valves are optionally available in version with adjustable switching times

2. Symbols

4/2 FUNCTIONS	4/2 FUNCTIONS WITH 4/3 SPOOLS	4/2 FUNCTIONS WITH 4/3 SPOOLS	4/3 FUNCTIONS
WEDE-42-A-10 1 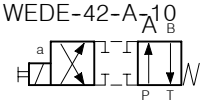	WEDE-42-AD-10 7 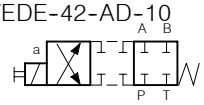	WEDE-42-BD-10 13 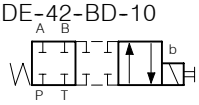	WEDE-43-D-10 19 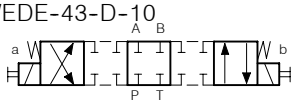
WEDE-42-AN-10 2	WEDE-42-AG-10 8	WEDE-42-BG-10 14 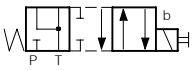	WEDE-43-G-10 20 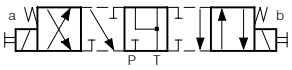
WEDE-42-B-10 3 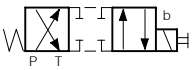	WEDE-42-AH-10 9	WEDE-42-BH-10 15 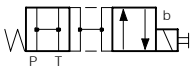	WEDE-43-H-10 21 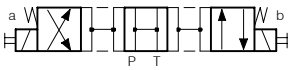
WEDE-42-BN-10 4 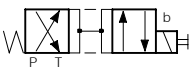	WEDE-42-AJ-10 10 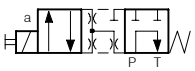	WEDE-42-BJ-10 16 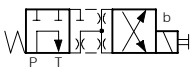	WEDE-43-J-10 22 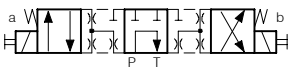
Crossover transients 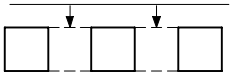	WEDE-42-AGG-10 11	WEDE-42-BGG-10 17 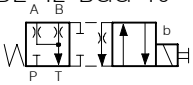	WEDE-43-GG-10 23 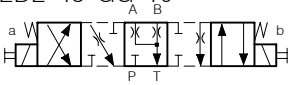

3. Characteristics

Type		4/2 and 4/3 solenoid controlled spool valves
Design		direct acting
Mounting method		manifold mounting
Size		nominal size 10 mm, ISO 4401 size 5 interface
Mass	kg	4,8 (1 solenoid), 6,3 (2 solenoids)
Mounting attitude		horizontal recommended (vertical mounting makes purging of air more difficult)
Flow direction		see symbols
Operating pressure in P, A und B	bar	max. 315
Operating pressure in T	bar	max. 160
Flow rate Qmax	l/min	120, see Performance Data
Fluids		Hydraulic oils HL and HLP to DIN 51 524
Fluid temperature range	°C	-25 ... + 80
Ambient temperature	°C	-25 ... + 50
Viscosity range	cSt	10 ... 500, recommended 15 ... 250
Minimum fluid cleanless		18/14 to ISO 4406 /CETOP RP70H 8 ... 9 to NAS 1638
Magnet type		high pressure, wet armature type (with slip-on coils)
Standard voltages	VDC	12 / 24 / 98 / 196 - for other voltages - contact BUCHER
Nom. voltage tolerance	%	±10
Nom. power consumption	W	39
Duty cycle	%	100
Enclosure protection		IP 65 to DIN 40 050
Electrical connection		3-pin square plug to DIN 43 650 / ISO 4400; can be turned 4 x 90°

4. Performance graphs

Oil viscosity 33 cSt

Δp-Q characteristics

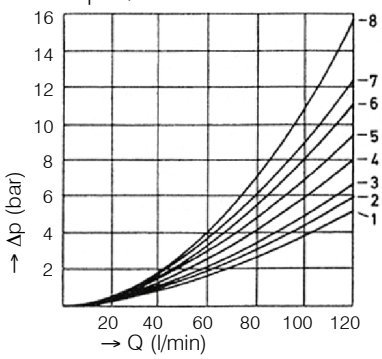

Δp-Q characteristics

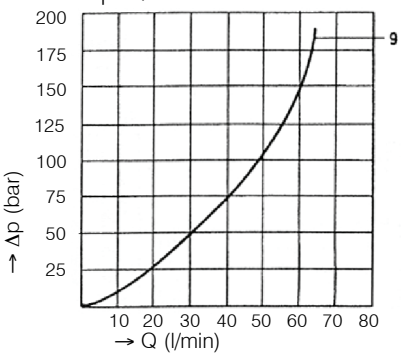

	Solenoid	P ⇑ A	P ⇑ B	A ⇑ T	B ⇑ T	P ⇑ T
A / B spools		3	3	5	6	--
AN / BN spool		2	2	4	5	--
D Kolben		2	2	4	5	--
G spool	OFF	--	--	5	6	--
	ON	3	3	6	7	--
H spool	OFF	--	--	--	--	3
	ON	1	1	6	7	--
J spool		2	2	1	8	8
GG spool	OFF	--	--	9	9	--
	ON	2	2	5	6	--

The quoted max. flow rates apply when the flows passing through the valve are equal in both directions (symmetrical). For non-symmetrical flows, the max. rates are substantially reduced, in worst cases to only 1/3 of the above values.

Performance limits

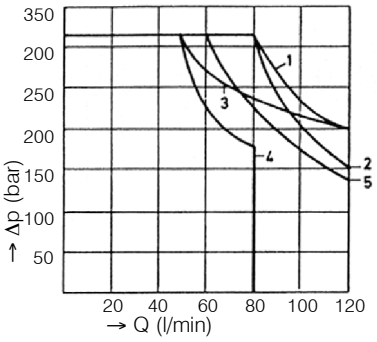

A / AN spools	2
B / D spools	1
BN / H spools	3
G spool	5
J spool	4
GG spool	5

Switching times
at 60 l/min and 160 bar:

Energising	160 ms
De-energising	45 ms

5. Dimensions

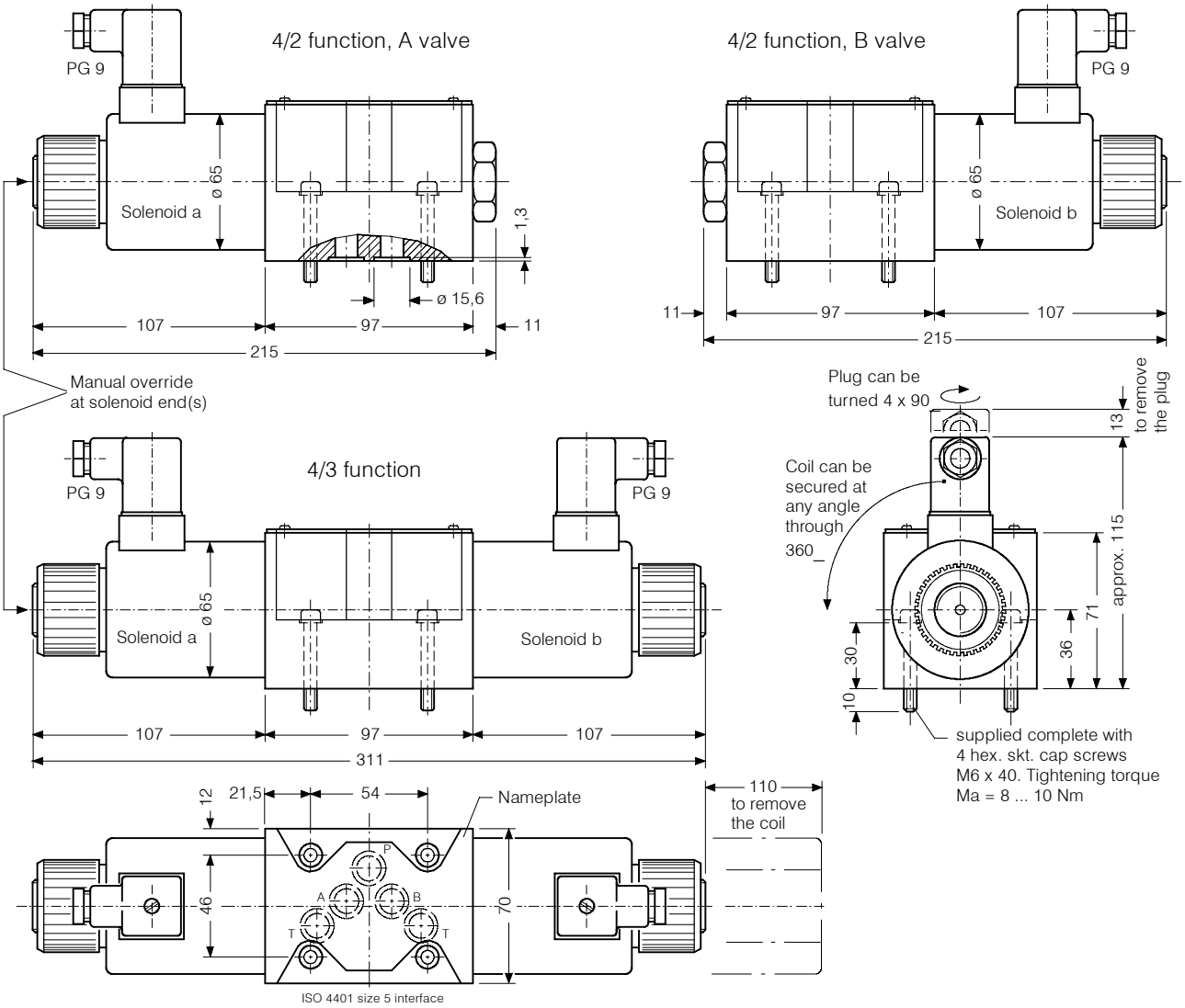

6. Schematic section

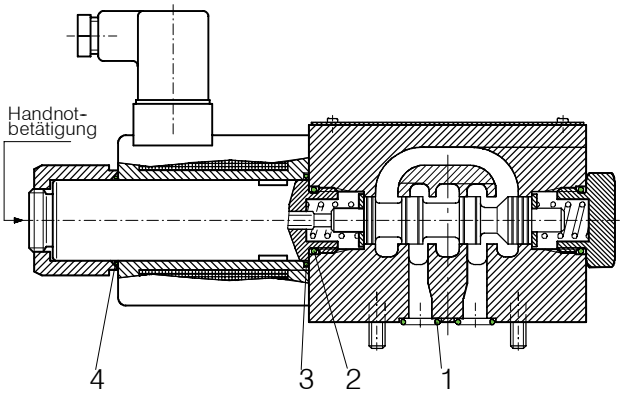

Sealkit No. DS-122-V, comprising *):

Itm.	Qty.	Qty.	Description	Size
2	5	5*)	O-ring no. 014	∅ 12,42 x 1,78 Viton
1	2	2*)	O-ring no. 118	∅ 21,89 x 2,62 Viton
4	1	2*)	O-ring	∅ 30 x 2,00 N70
5	1	1*)	O-ring	∅ 30 x 2,00 N70

—— 4/3 Valves (2 Solenoids)

———— 4/2 Valves (1 Solenoid)

7. Installation and servicing

All installation and servicing must be carried out with care, and by qualified personnel only. The following points must be observed: "A" (and "B") spools must not be reversed, or the function P⇒A / B⇒T will become P⇒B / A⇒T (and vice versa for "B"). All other spools are symmetrical, but should always be reassembled with their original orientation, in any case. When changing seals, the new seals must be thoroughly oiled or greased before they are fitted. Use the specified tightening torques when fitting the spring cap, DC and the core tube. At installation, make sure that the valve interface aligns with the interface of the mating surface, and use the specified tightening torque when fitting the valve mounting bolts.

8. Model code key

WEDE - 43 - D - 10 - V - 1 24 VDC

Direct solenoid operated directional valve

42 = 4/2 function
43 = 4/3 function

A = 4/2 function, overlap X-over
AN = 4/2 function, underlap X-over
B = 4/2 function, overlap X-over
BN = 4/2 function, underlap X-over
AD / AG / AH / AJ / AGG = 4/2 function with 4/3 spool, solenoid at a-end
BD / BG / BH / BJ / BGG = 4/2 function with 4/3 spool, solenoid at b-end
D / G / H / J / GG = 4/3 function

10 = nominal size 10 mm (ISO size 5 interface)

V = Viton seals (Standard)
Special seals by arrangement

1 ... 9 = design number (omit when ordering new units)

Voltage and current plainly specified

9. Related data sheets

Old no.	New no.	
i-41	400-P-050101-E	DIN 24 340 size A10 interface

info.ch@bucherhydraulics.com www.bucherhydraulics.com

© 2015 by Bucher Hydraulics AG Frutigen, CH-3714 Frutigen
All rights reserved.
Data is provided for the purpose of product description only, and must not be construed as warranted characteristics in the legal sense. The information does not relieve users from the duty of conducting their own evaluations and tests. Because the products are subject to continual improvement, we reserve the right to amend the product specifications contained in this catalogue.

Solenoid Operated Spool Valve, ISO size 05

Q_{max} = 100 l/min, p_{max} = 315 bar
Direct Acting, Soft Switching
Series WEDEU…

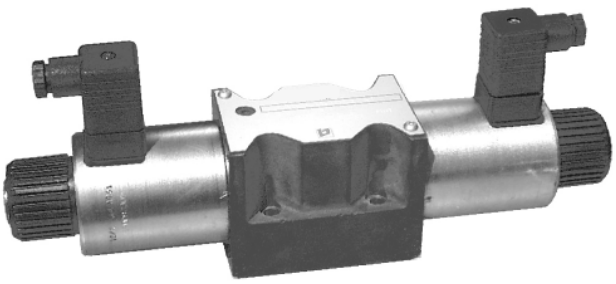

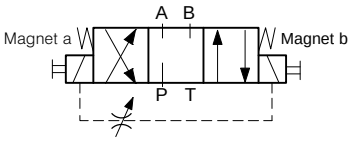

- Switching time is steplessy variable from outside the valve
- Full adjustment range is 150 … 1500 ms
- Special opening geometry, high switching performance
- High flow rates
- Good Δp-Q values: no narrowing of flow paths in energised position
- Slip-on coils: coils can be changed without opening the hydraulic envelope
- Pressures to 315 bar in P, A and B
- For subplate mounting, Interface ISO size 05 to ISO 4401-05-04

1 Description

Series WEDEU ...-10 solenoid operated spool valves are direct acting units that provide smooth, shock-free acceleration, deceleration and reversal of hydraulic cylinders and motors. The design incorporates low-cost ramp controls that are entirely hydraulic in operation. The principal components of the valve are a cast body, a control spool with centering springs, and wet armature solenoids with high-pressure core tubes and slip-on coils (DC only). A coil can be replaced, or the voltage changed, without opening the hydraulic envelope. The valve switching time is adjusted by means of a flow-control screw that is accessible from the outside of the valve. The effect of the throttle is to reduce the rate of oil transfer between the two spring chambers. This, in turn, dictates the speed at which the spool shifts. To ensure that the spring chambers are purged of air and completely filled with oil when the valve is commissioned, it must be operated through 6 ... 12 complete cycles (spool stroked end-to-end) with the flow control screw turned fully open. After this has been done, the flow control needle can then be screwed in half a turn at a time (2 mm Allen key required) until the required switching time is attained.
Warning: the flow control must never be screwed in fully i.e. until it ”bottoms” - this would prevent any transfer of oil and the valve would no longer function. The system design must ensure that air cannot be sucked back through the tank line. To provide a reliable oil supply to the two spring chambers, the minimum tank line back pressure should be 1 bar.

2 Symbols

4/2 FUNCTIONS	4/2 FUNCTIONS WITH 4/3 SPOOLS	4/2 FUNCTIONS WITH 4/3 SPOOLS	4/3 FUNCTIONS
WEDEU-42-A-10 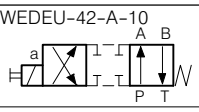 1	WEDEU-42-AD-10 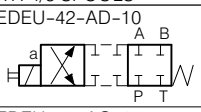 4	WEDEU-42-BD-10 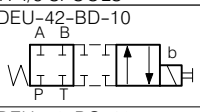 7	WEDEU-43-D-10 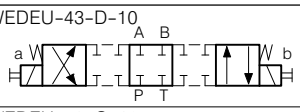 10
WEDEU-42-B-10 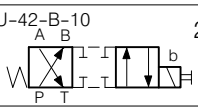 2	WEDEU-42-AG-10 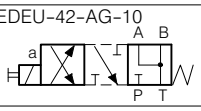 5	WEDEU-42-BG-10 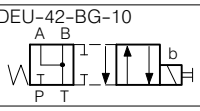 8	WEDEU-43-G-10 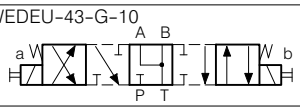 11
Crossover transients 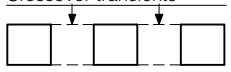 3	WEDEU-42-AH-10 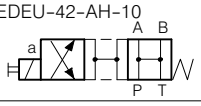 6	WEDEU-42-BH-10 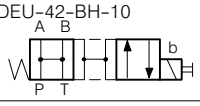 9	WEDEU-43-H-10 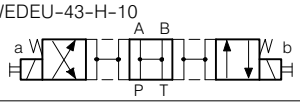 12

NOTE! Other spool types on request.

WWW.SUMY.IR

3 Technical data

General characteristics	Description, value, unit
Designation	4/2 and 4/3 solenoid operated directional spool valves
Design	direct acting, soft-switching
Mounting method	mainfold mounting
Size	nominal size 10 mm, 4401-05-04 size 5 interface
Mass	1 solenoid = 4.8 kg 2 solenoids = 6.3 kg
Mounting attitude	horizontal recommended (vertical mounting makes air bleeding difficult)

Hydraulic characteristics	Description, value, unit
Maximum operating pressure	P, A and B 315 bar
Maximum return pressure	160 bar
Maximum flow rate	100 l/min
Switching frequency	max. 1200 cycles/h
Flow direction	see symbols
Hydraulic fluid	HL and HLP mineral oil to DIN 51 524; for other fluids, please contact BUCHER
Hydraulic fluid temperature range	-30 °C … +80 °C
Ambient temperature range	-30 °C … +50 °C
Viscosity range	10…500 mm^2/s (cSt), recommended 15...250 mm^2/s (cSt)
Minimum fluid cleanliness Cleanliness class to ISO 4406 : 1999	class 20/18/15

Electrical characteristics	Description, value, unit
Actuator type	solenoid coil
Solenoid coils type	pressure-tight wet armature design (slip-on coil system)
Supply voltage	12 V DC, 24 V DC, 196 V DC (Other voltages on request) 196 V DV: DIN (can be used with rectifier for 230 AC)
Supply voltage tolerance	± 10 %
Nominal power consumption	39 W
Relative duty cycle	100 %
Protection class to ISO 20 653 / EN 60 529	IP 65 to DIN 40050
Electrical connection	3-pin square plug rotatable 4x90° to DIN 43650 / ISO 4400

4 Performance graphs

measured with oil viscosity 33 mm²/s (cSt)

Δp-Q characteristics

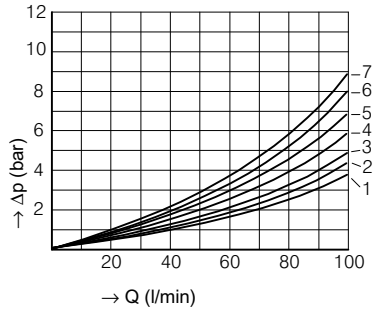

Application limits

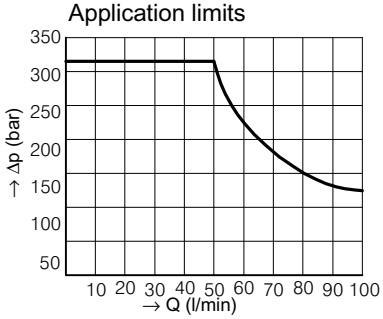

The quoted maximum flow rates apply when the flows passing through the valve are equal in both directions (symmetrical). For non-symmetrical flows, the maximum rates are substantially reduced, in worst cases to only 1/3 of the above values.

Switching times

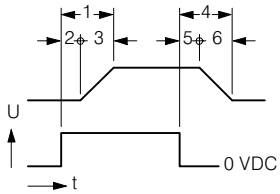

1 = total energising time
2 = time until flow paths begin to open
3 = time for solenoid to open spool fully
4 = total spring-return time
5 = time until flow paths begin to close
6 = time for spring to close spool fully

	Solenoid	P ⇒ A	P ⇒ B	A ⇒ T	B ⇒ T	P ⇒ T
A- / B spools		3	3	5	6	--
D spool		2	2	4	5	--
G spool	OFF	--	--	5	6	--
	ON	3	3	6	7	--
H spool	OFF	--	--	--	--	3
	ON	1	1	6	7	--

The values 1 and 4 are jointly controlled by the setting of the flow control, but it is usually the case that they are not equal. Both values normally fall in the range 150 ... 1,500 ms. The switching times are also strongly influenced by the following factors:

- Solenoid force: = ± 15 % voltage variation
  = ± 50 % switching time
- Cold / hot solenoid: = ± 20 % switching time
- Flow rate Q (l/min): = influences values 3 + 6 (lower Q = shorter t)
- Pressure diff. Δp (bar): = ± 75 % change in Δp
  = ± 10 % switching time

There are a large number of factors that cannot easily be pre-determined. This means that the flow control cannot be factory-set and adjustment on-site is therefore essential. This is simple in practice, thanks to the externally-accessible flow control.

5 Installation information

ATTENTION!

All installation and servicing must be carried out with care, and by qualified personnel only. When servicing valves (cleaning, changing seals, etc.) note the following:
A (and B) spools must not be reversed, or the function P ⇒ A / B ⇒ T will become P ⇒ B / A ⇒ T (and vice versa). All other spools are symmetrical but should always be reassembled with their original orientation, in any case.

IMPORTANT!: When changing seals, the new seals should be thoroughly oiled or greased before fitting them to the valve.

IMPORTANT!: Use the correct tightening torque when fitting Spring cap, DC and Core tube.

IMPORTANT!: At installation, be sure to mount the valve with its hydraulic ports mating with those of the manifold block or subplate and, finally, use the correct tightening torque for the 4 x M6 mounting screws.

6 Dimensions & sectional view

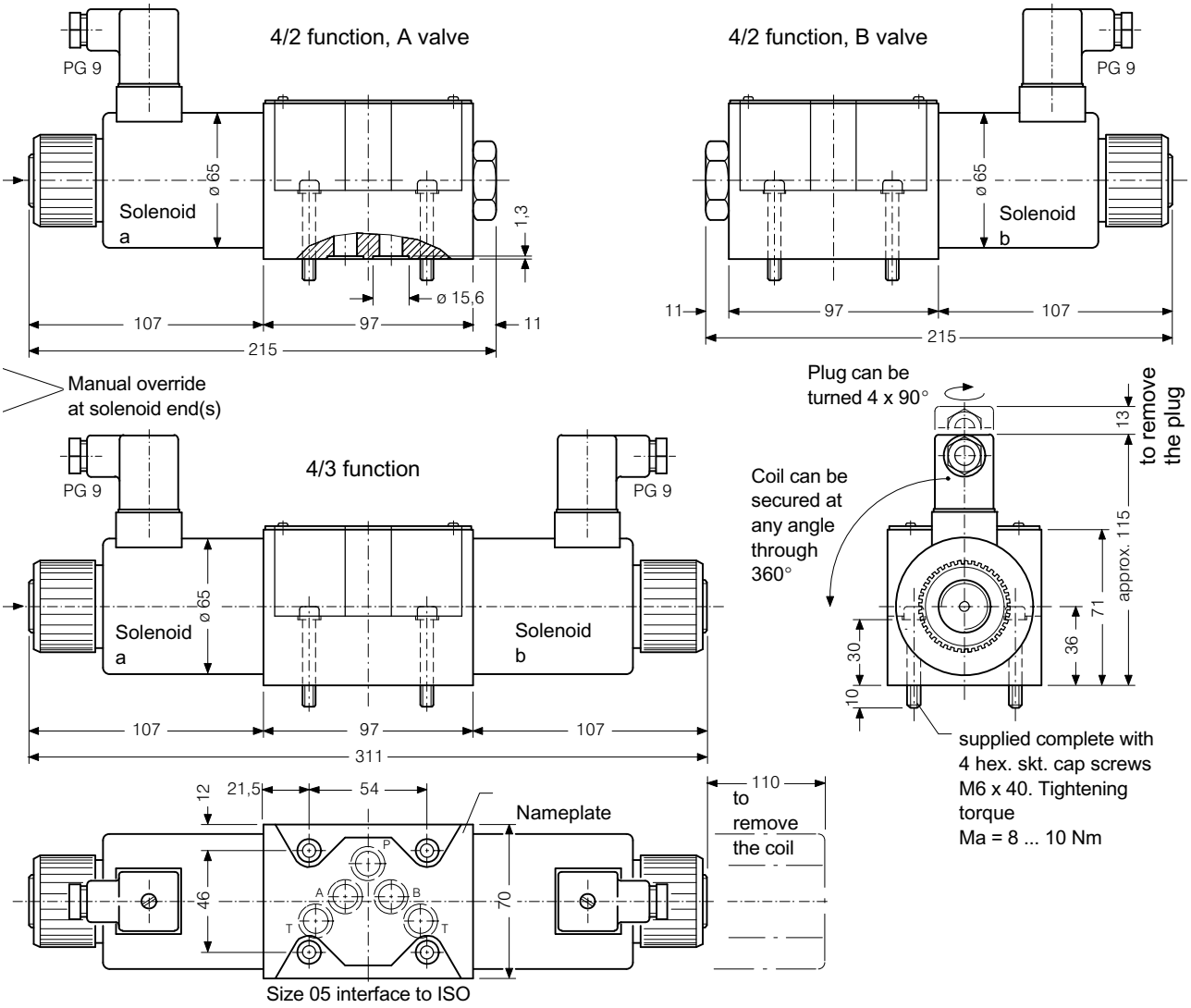

7 Schematic section

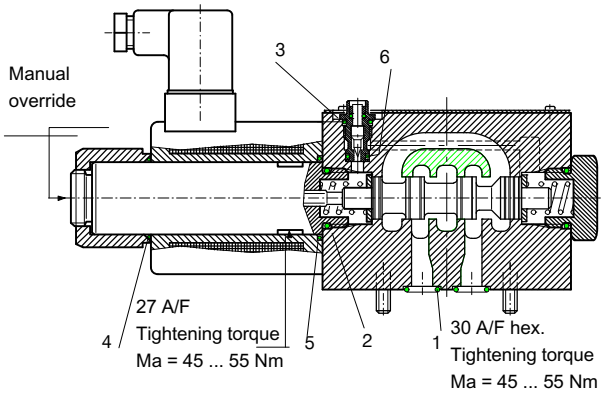

Sealkit no. DS-122-V, comprising:

Itm.	Qty.	Description	Size
1	5	O-ring no. 014	∅ 12.42 x 1.78 N90
2	2	O-ring no. 118	∅ 21.89 x 2.62 N90
3	1	O-ring no. 012	∅ 9.25 x 1.78
4	2	O-ring	∅ 30.00 x 2.00 N70
5	2	O-ring	∅ 30.00 x 2.00 N70
6	1	O-ring no. 010	∅ 6.07 x 1.78 N90

8 Ordering code

Ex. WEDE U - 43 - D - 10 V - 1 24 D _

WEDE = Directional, valve, solenoid operated, direct acting

U = soft-switching

42 = 4/2 function
43 = 4/3 function

A = 4/2 function, A spool
AN = 4/2 function, A spool, oben x-over
B = 4/2 function, B spool
BN = 4/2 function, B spool, oben x-over
AD, AG, AH, AJ, AGG = 4/2 function with 4/3 spool, solenoid at A end
BD, BG, BH, BJ, BGG = 4/2 function with 4/3 spool, solenoid at B end
D, G, H, J, GG = 4/3 function

10 = ISO 4401 size 5 interface

V = FKM (fluorocarbon rubber / VITON) seals
(special seals on request)

1 … 9 = technical design no. (omit by ordering)

… = voltage e.g. 24 (24 V)

D = current DC

blank = DIN EN 175301-803 connection, 3-pole 2 P+E, with mating plug, IP 65 **(standard)**
M100 = DIN EN 175301-803 connection, 3-pole 2 P+E
JT = Junior Timer radial plug connection (with protection diode, IP 65)
DT = Deutsch plug connection (with protection diode, IP 67/69K) (only 12 and 24 V DC)
} mating plug not supplied

9 Related data sheets

Reference	Description
400-P-050101	Size 05 interface to ISO 4401-05-04
400-P-515101	LRSA DIN plug

info.ch@bucherhydraulics.com www.bucherhydraulics.com

© 2025 by Bucher Hydraulics AG Frutigen, CH-3714 Frutigen
All rights reserved.
Data is provided for the purpose of product description only, and must not be construed as warranted characteristics in the legal sense. The information does not relieve users from the duty of conducting their own evaluations and tests. Because the products are subject to continual improvement, we reserve the right to amend the product specifications contained in this catalogue.

Classification: 430.300.300.305.305

BUCHER hydraulics

WWW.SUMY.IR

Directional valve 4-way/3-position

Q_{max} = 30 l/min, p_{max} = 315 bar
direct acting, poppet type, switching solenoid
Type series: WESDB-43-D-6...

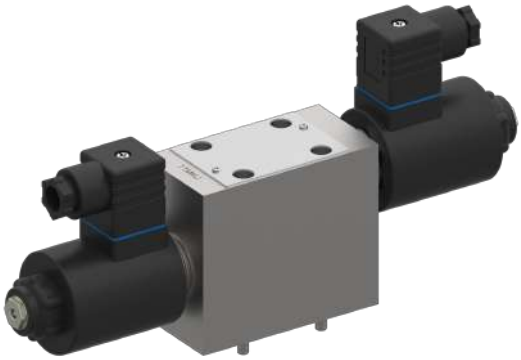

- Plate mounting valve
- All external parts with zinc-nickel plating according to DIN EN ISO 19598
- Interface according to ISO 4401-03-02
- Seat tight shut-off
- Closed in the non-operated condition
- Leak-free shut-off function
- Optional with manual override
- Various plug-connector systems and voltages are available
- The slip-on coil can be rotated, and it can be replaced without opening the hydraulic envelope

Description

The 4-way/3-position solenoid-operated directional valves, series WESDB-43-D-6..., are size 6 with interface according to ISO 4401-03-02. They are designed on the poppet/seat principle, and are therefore virtually leak-free. All external parts of the cartridge are zinc-nickel plated and are thus suitable for use in the harshest operating environments. The slip-on coils can be replaced without opening the hydraulic envelope and can be positioned at any angle through 360°. These valves are primarily used as pilot valves in certain mobile and industrial applications where leak-tight shut-off functions are crucially important. Examples are where loads, tensions, or clamping forces must be held without leakage. For self-assembly, please refer to the section related datasheets.

Symbol

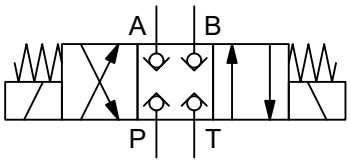

Technical data

General characteristics	Description, value, unit
Function group	Directional valve
Function	4-way/3-position
Design	Plate mounting valve
Controls	switching solenoid
Characteristic	direct acting, poppet type
MTTFd value	150 years
Construction size	NG 6
Mounting attitude	unrestricted
Weight	3.5 kg
Interface according to	ISO 4401-03-02
Tightening torque steel	5.2 Nm
Tightening torque aluminium	5.2 Nm
Tightening torque tolerance	± 10 %
Minimum ambient temperature	- 30 °C
Maximum ambient temperature	+ 50 °C
Surface protection	All external parts with zinc-nickel plating according to DIN EN ISO 19598
Sealing material	see ordering code
Seal kit order number	NBR: DS-477-N / FKM: DS-477-V

Hydraulic characteristics	Description, value, unit
Maximum operating pressure	315 bar
Maximum flow rate	30 l/min
Flow direction	see symbol
Hydraulic fluid	HL and HLP mineral oil according to DIN 51 524; other fluids on request!
Minimum fluid temperature	- 30 °C
Maximum fluid temperature	+ 80 °C
Viscosity range	10 ... 500 mm^2/s (cSt)
Recommended viscosity range	15 ... 250 mm^2/s (cSt)
Minimum fluid cleanliness (cleanlineless class according to ISO 4406:1999)	class 20/18/15

Electric characteristics	Description, value, unit
Actuator type	solenoid coil
Solenoid coils type	D45/207
Supply voltage DC	12/24 V DC
Supply voltage AC	115/230 (50 ... 60 Hz) V AC
Supply voltage tolerance	± 10 %
Nominal power consumption	VDC = 30...32 W / VAC = 31...32 W
Switching time	Switching time measured at: UN; Δp = 250 bar; Q = 24l/min; TAmbient = 20 °C; ϑ = 46 mm2/s 80 ms (energizing) 40 ms (de-energizing)

WWW.SUMY.IR

Electric characteristics	Description, value, unit
Relative duty cycle	100 %
Electrical connection coil	several connection types available, see ordering code
Protection class solenoid coil to ISO 20 653 / EN 60 529	IP 65 / IP 67 / IP 69K, see “Ordering code” (with appropriate mating connector and proper fitting and sealing)

NOTE!
The switching time can be strongly influenced by flow rate, pressure, viscosity, and the dwell period under pressure. In practice, the switching time may therefore deviate from the specified value range.

Performance graphs

measured with oil viscosity 33.0 mm²/s (cSt)

p = f (Q) Performance limit

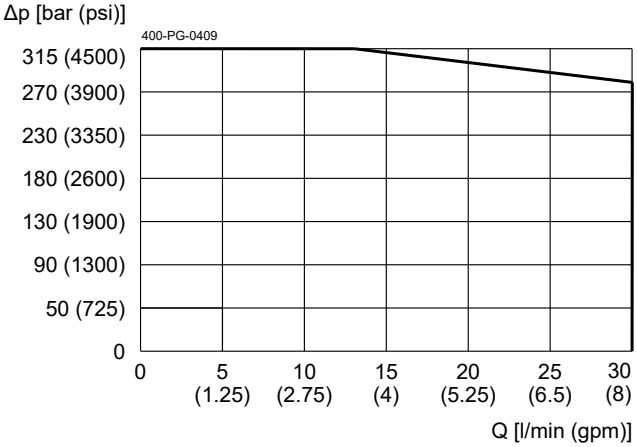

p = f (Q) Pressure-flow rate

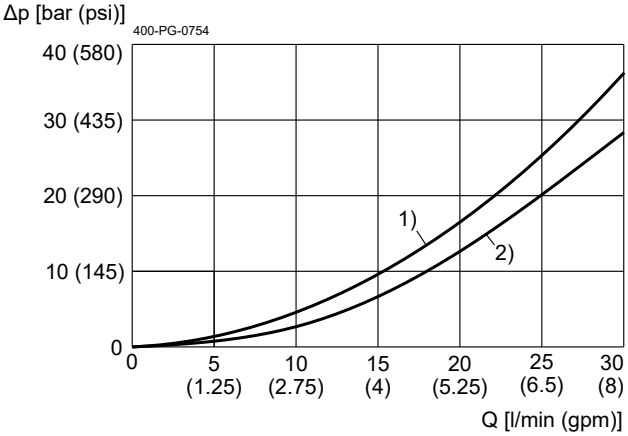

1) = P→A
2) = A→T

p = f (Q) Pressure-flow rate

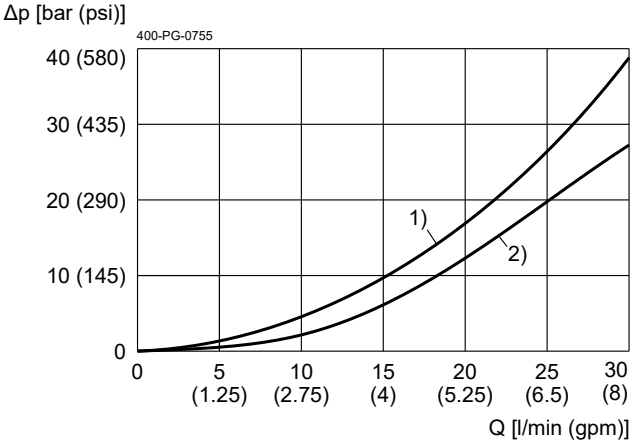

1) = P→B
2) = B→T

BUCHER
hydraulics
WWW.SUMY.IR

Dimensions and sectional view

Beispiel für die Masseinheit:
Exampel for the dimensional units:

0.79 = 0.79 mm millimeter
(.031) = 0.031" inch

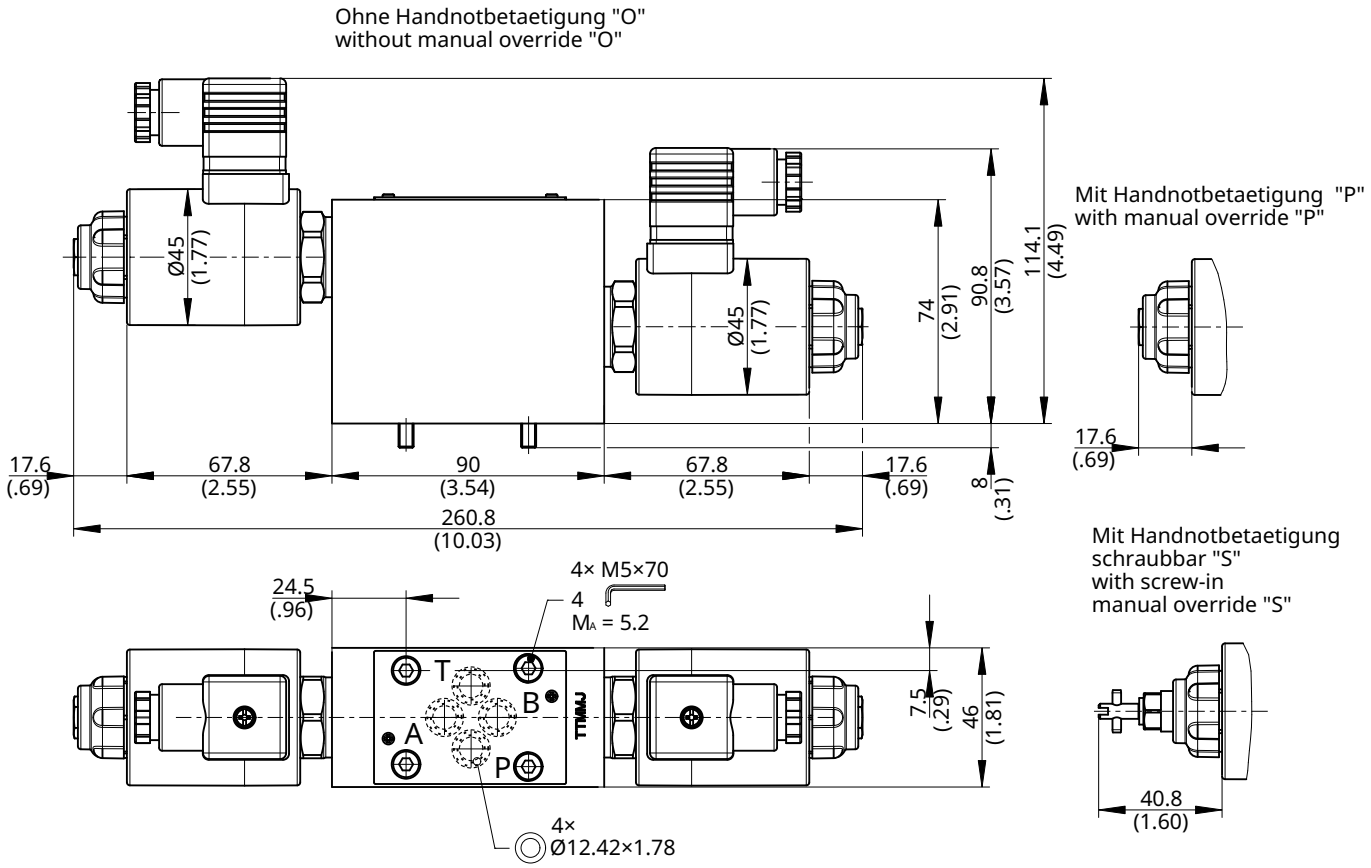

Installation information

IMPORTANT!
1) Fixing screws, strength class 8.8, are included in the scope of delivery. When fitting use the specified tightening torque. The value can be found in the chapter "Technical data".

ATTENTION!
Only qualified personnel with mechanical skills may carry out any maintenance work. Generally, the only work that should ever be undertaken is to check, and possibly replace, the seals. When changing seals, oil or grease the new seals thoroughly before fitting them.

NOTE!
The seals are not available individually. The seal kit order number can be found in the chapter "Technical data".

WWW.SUMY.IR

Ordering code

W E S D B - 43 - D - 6 O - N - 1 24 D _

W	=	directional valve
E	=	electrically operated, D45/207, 30...32 W
S	=	seat valve
D	=	direct acting
A…Q	=	standard model according to valid data sheet
Z…R	=	special model (on request)
43	=	4-way/2-position
D	=	function D, de-energized closed
6	=	nominal size 6
O	=	without manual override **(standard)**
P	=	with manual override
S	=	with screwable manual override
N	=	NBR (nitril-butadien-rubber / BUNA) seals **(standard)**
V	=	FKM (fluorocarbon rubber / VITON) seals
		special model (on request)
1…9	=	technical design no. (omit by ordering)
…	=	voltage e.g. 24 (24 V)
D	=	current DC
A	=	current AC

(blank)	=	DIN EN 175301-803 connection	3-pole 2 P+E **(standard)**	(IP 65)	with mating plug
M100	=	DIN EN 175301-803 connection	3-pole 2 P+E	(IP 65)	with mating plug
JT	=	Junior Timer plug connection	2-pole radial, with protection diode	(IP 65)	mating plug not supplied
D	=	Deutsch plug connection DT04-2P	2-pole 45°	(IP 67/69K)	mating plug not supplied
DT	=	Deutsch plug connection DT04-2P	2-pole 45°, with protection diode	(IP 67/69K)	mating plug not supplied
		other plug-variants, please consult BUCHER.			

IMPORTANT!
Not every combination of voltage values, current type and plug connections available.

Related data sheets

Reference	Description
400-P-030501	Interface ISO 4401-03... (Size 6)
400-P-120120	Solenoid coil D45/207
400-P-126210	4-way/2-position WS42GNA-8...
400-P-010101	MTTFd Values for Hydraulic Valves

info.ch@bucherhydraulics.com **www.bucherhydraulics.com**

© 2025 by Bucher Hydraulics AG Frutigen, 3714 Frutigen, Switzerland

All rights reserved.
Data is provided for the purpose of product description only, and must not be construed as warranted characteristics in the legal sense. The information does not relieve users from the duty of conducting their own evaluations and tests. Because the products are subject to continual improvement, we reserve the right to amend the product specifications contained in this catalogue.

4-Way/2-Position Self-Reversing Valve, NG 6

Q_{max} = 60 l/min, p_{max} = 120 bar
Subplate mounting
Series WOFA-6…

- Automatic, load-independent reversal
- Predefined actuator direction at start-up
- No reversal pressures to set
- Simple construction (only 1 moving part)
- Long service life
- For subplate mounting, Interface NG 6 to ISO 4401-03-02

1 Description

The valve automatically reciprocates when connected to a hydraulic cylinder, for example. When the cylinder reaches the end of its stroke, or when the load pressure rises to the relief valve setting, there is no longer any flow through the valve. The cessation of flow causes the valve spool to shuttle to its other end position and consequently the actuator moves in the reverse direction. The reversal process is virtually independent of the load pressure. The process continues as long als the specified minimum flows and pressures are produced by the pump. In order to set the system pressure limiter, it will be evident that the self-reversing function of this valve must be blocked: See “Setting system relief valve”. The valve is designed in such a way that when pressure is connected to the P port the first flow condition is always P ⇒ B and A ⇒ T. This means, for example, that where an unequal area cylinder is used on a machine with strict safety requirements, then the A port of the valve should be connected to the full bore end of the cylinder and the B port to the annulus end (e.g. compactor circuits, where the first cylinder movement must be to retract).

2 Symbol

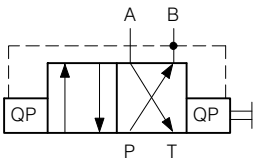

3 Technical data

General characteristics	Description, value, unit
Designation	4-way/2-position self-reversing valve
Design	sliding-spool design
Mounting method	subplate mounting
Size	NG 6, interface ISO 4401-03-02
Weight	1.1 kg

WWW.SUMY.IR

Hydraulic characteristics	Description, value, unit
Mounting attitude	unrestricted
Flow direction	see symbols
Maximum operating pressure	50 … 210 bar, higher pressures on request
Hydraulic fluid	HL and HLP mineral oil to DIN 51 524; for other fluids, please contact BUCHER
Hydraulic fluid temperature range	-20 °C … +60 °C
Viscosity range	20 … 200 mm^2/s (cSt)
Maximum flow rate	60 l/min
Flow rate range	P ⇒ A / A ⇒ T = max. 60 l/min P ⇒ B / B ⇒ T = max. 30 l/min P ⇒ B / B ⇒ T = min. 3 l/min
Cylinder area ratio	recommended φ = 1 ... 1.5 permitted φ = 1 ... 2
Cylinder internal leakage at p = 210 bar	max. permissible = 0.5 l/min.
Minimum fluid cleanliness Cleanliness class to ISO 4406 : 1999	class 20/18/15

4 Application example and pressure settings

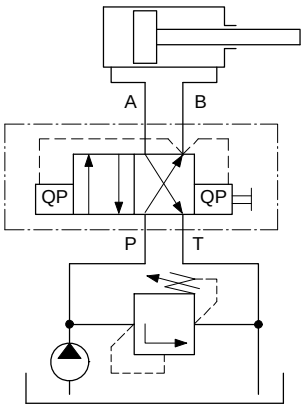

Applications (e.g.)

- in compactor controls
- in-container compactors
- in slurry scrapers
- in piston-type intensifiers

5 Performance graphs

measured with oil viscosity 33 mm²/s (cSt)

$$\varphi = \frac{\text{Cylinder full bore area}}{\text{Full bore area} - \text{Piston rod area}}$$

Δp = f (Q) Pressure drop-flow rate charateristic
for cylinder area ratio φ = 1 : 1

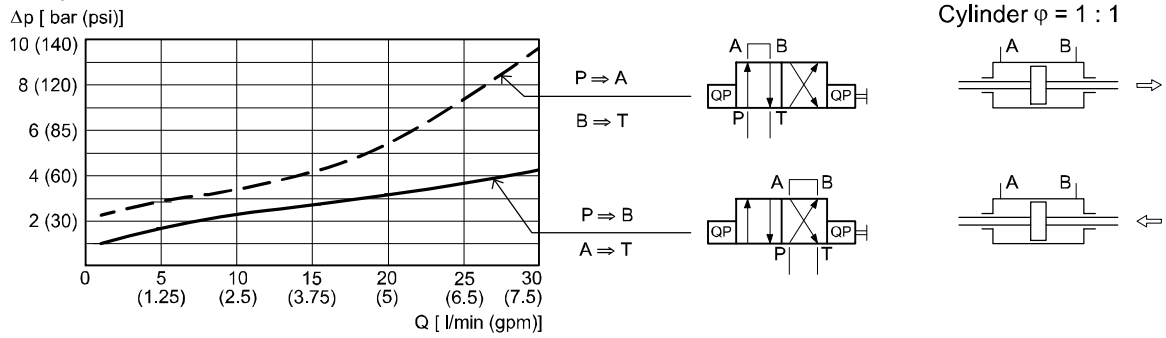

Δp = f (Q) Pressure drop-flow rate charateristic
for cylinder area ratio φ = 1.5 : 1

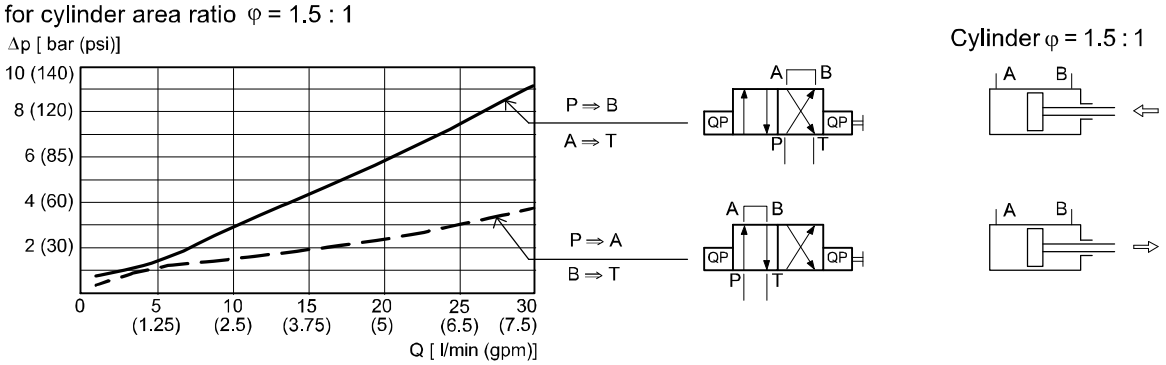

Δp = f (Q) Pressure drop-flow rate charateristic
for cylinder area ratio φ = 1.5 : 1

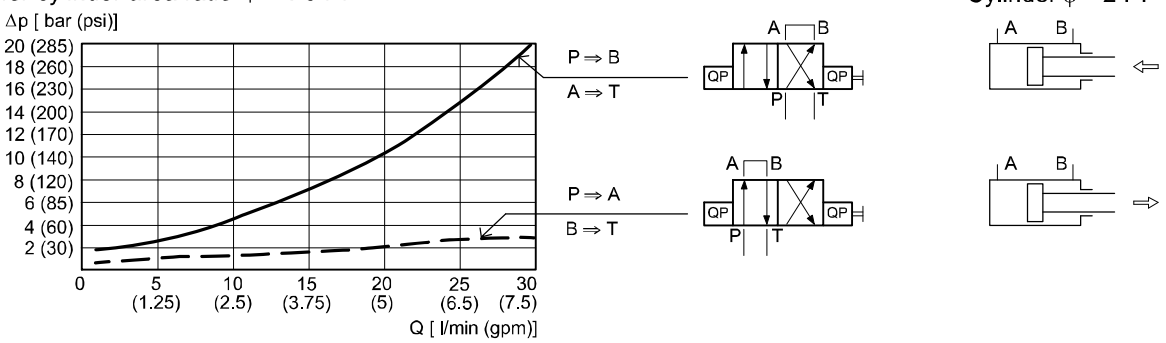

6 Dimensions & sectional view

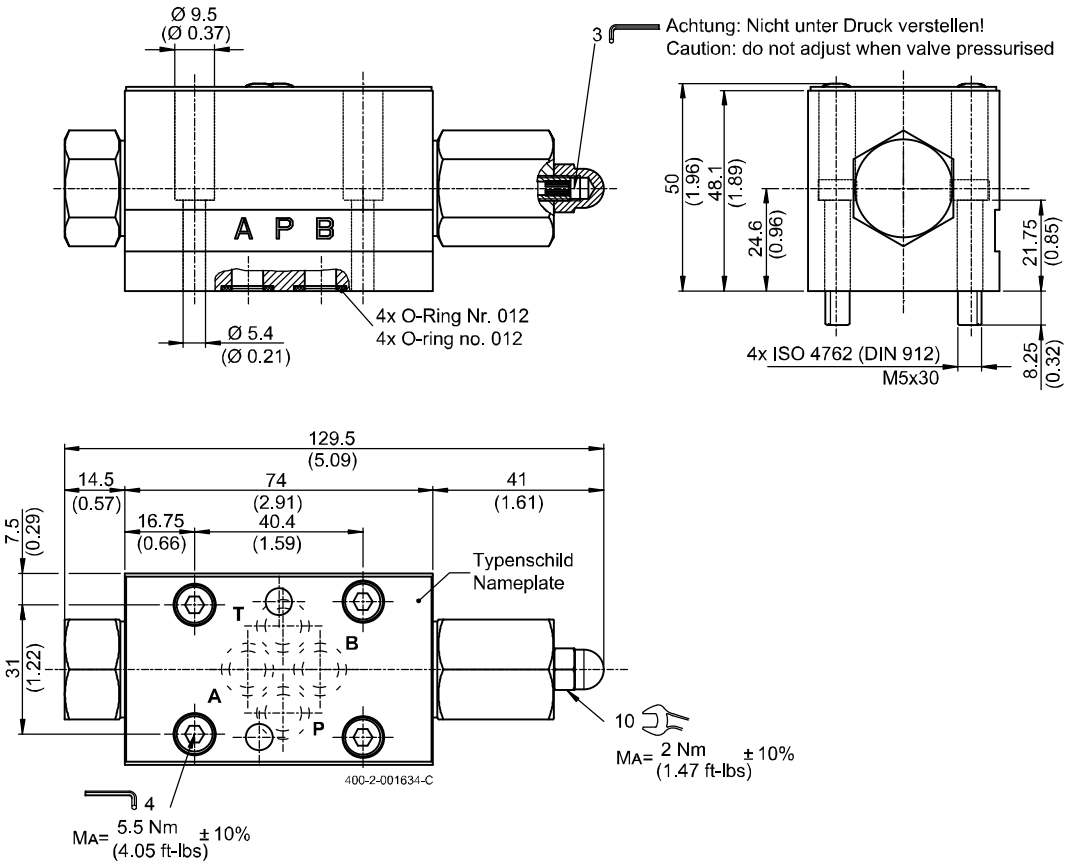

7 Setting system relief valve

- Switch off pump, alternatively reduce pressure to minimum (10 bar max.).
- To set the system relief valve, fist block the automatic reversal of the Ventil. Remove the dome nut, turn the offsetting spindle clockwise unit it hits its inner end stop. The spool is now clamped P ⇒ B, A ⇒ T.
- Start the pump. Set the required relief pressure.
- Stop the pump.
- Turn the offsetting spindle anticlockwise unit it hits its outer end stop, then replace the dome nut.

ATTENTION!

Never turn the offsetting spindle when the valve is pressurised, as this can cause seal damage. If necessary, switch of the pump.

8 Schematic section

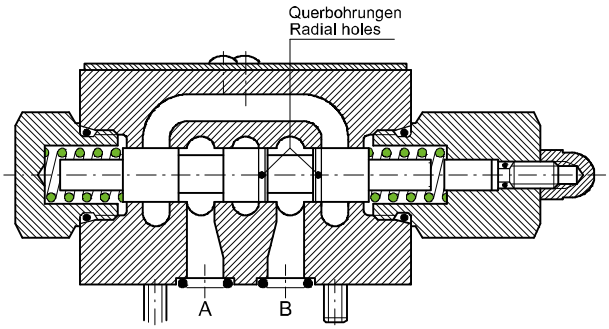

9 Safety instructions

IMPORTANT!:
When the pump is switched of (e.g. emergency switch in the plant), the valve spool will reset to P⇒ B, A ⇒T (the “Pump Start” position) after 0.5 secs (measured with fluid viscosity 33 cSt). The cylinder, connected as shown in the Application example, is ready to retract.

Deviation from the circuitry shown in the application example, and changes in the fluid viscosity can result in an increase in the minimum required reversal time.

10 Installation information

ATTENTION!
Maintenance work may only be carried out carefully by qualified personnel. The following must be observed when carrying out maintenance work on the valve (cleaning, seal change, etc.):
- Unscrew and remove dome nut, spring cap and screw plug
- Remove the 2 springs
- Carefully slide out the self-reversing spool
- The self-reversing spool is asymmetric and must not be reinserted the wrong way round, otherwise the normal Pump Start function P ⇒ B and A ⇒ T will be reversed to P ⇒ A and B ⇒ T. The correct spool orientation can be identified by the 2 small radial holes. The spool is factory-inserted so that these 2 holes are above the B port of the hydraulic interface

IMPORTANT!: When fitting new seals ensure that they are first well oiled or greased.

IMPORTANT!: Before refitting the spring cap the offsetting spindle must be fully retracted into the spring cap allow the spool to oscillate freely.

IMPORTANT!: Observe the correct tightening torques for spring cap plug and plastic dome nut.

11 Ordering code

Ex. WOF A – 6 _ – 1

WOF	=	4-way/2-position self-reversing valve
A … Q	=	standard model per current data sheet
Z … R	=	special features by arrangement on request
6	=	Nominal size 6
(blank)	=	NBR (nitril-butadien-rubber / BUNA) seals (**standard**)
V	=	FKM (fluorocarbon rubber / VITON) seals *(special seals - please consult BUCHER)*
1 … 9	=	technical design no. (omit when ordering)

12 Related data sheets

Reference	Description
400-P-030501	Interface NG 6 to ISO 4401-03-02

info.ch@bucherhydraulics.com www.bucherhydraulics.com

© 2023 by Bucher Hydraulics AG Frutigen, CH-3714 Frutigen
All rights reserved.
Data is provided for the purpose of product description only, and must not be construed as warranted characteristics in the legal sense. The information does not relieve users from the duty of conducting their own evaluations and tests. Because the products are subject to continual improvement, we reserve the right to amend the product specifications contained in this catalogue.

Classification: 430.300.300.305.305

4-Way/2-Position Self-Reversing Valve, NG 10

Q_{max} = 80 l/min, p_{max} = 210 bar
Subplate mounting
Series WOFB-10…

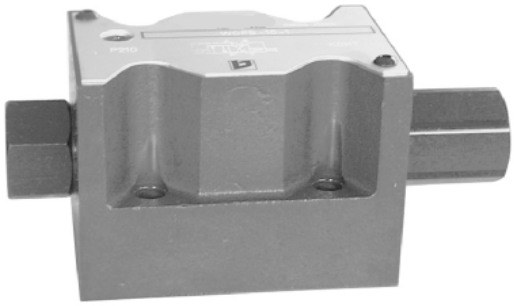

- Automatic, load-independent reversal
- Predefined actuator direction at start-up
- No reversal pressures to set
- Simple construction (only 1 moving part)
- Long service life
- For subplate mounting, Interface NG 10 to ISO 4401-05-04

1 Description

The valve automatically reciprocates when connected to a hydraulic cylinder, for example. When the cylinder reaches the end of its stroke, or when the load pressure rises to the relief valve setting, there is no longer any flow through the valve. The cessation of flow causes the valve spool to shuttle to its other end position and consequently the actuator moves in the reverse direction. The reversal process is virtually independent of the load pressure. The process continues as long als the specified minimum flows and pressures are produced by the pump. In order to set the system pressure limiter, it will be evident that the self-reversing function of this valve must be blocked: See “Setting system relief valve”. The valve is designed in such a way that when pressure is connected to the P port the first flow condition is always P ⇒ B and A ⇒ T. This means, for example, that where an unequal area cylinder is used on a machine with strict safety requirements, then the A port of the valve should be connected to the full bore end of the cylinder and the B port to the annulus end (e.g. compactor circuits, where the first cylinder movement must be to retract).

2 Symbol

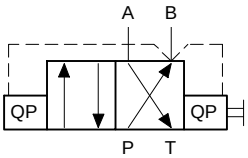

3 Technical data

General characteristics	Description, value, unit
Designation	4-way/2-position self-reversing valve
Design	sliding-spool design
Mounting method	subplate mounting
Size	NG 10, interface ISO 4401-05-04
Weight	3.0 kg

WWW.SUMY.IR

Hydraulic characteristics	Description, value, unit
Mounting attitude	unrestricted
Flow direction	see symbols
Maximum operating pressure	60 … 210 bar, higher pressures on request
Hydraulic fluid	HL and HLP mineral oil to DIN 51 524; for other fluids, please contact BUCHER
Hydraulic fluid temperature range	-20 °C … +60 °C
Viscosity range	20 … 200 mm^2/s (cSt)
Maximum flow rate	80 l/min
Flow rate range	P ⇒ A / A ⇒ T = max. 80 l/min P ⇒ B / B ⇒ T = max. 40 l/min P ⇒ B / B ⇒ T = min. 10 l/min
Cylinder area ratio	recommended φ = 1 ... 1.5 permitted φ = 1 ... 2
Cylinder internal leakage at p = 210 bar	max. permissible 0.7 l/min
Minimum fluid cleanliness Cleanliness class to ISO 4406 : 1999	class 20/18/15

4 Application example and pressure settings

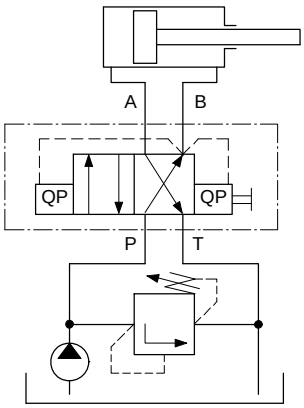

Applications (e.g.)

- in compactor controls
- in-container compactors
- in slurry scrapers
- in piston-type intensifiers
- for pressure intensifiers

5 Performance graphs

measured with oil viscosity 33 mm^2/s (cSt)

Δp = f (Q) Pressure drop-flow rate charateristic

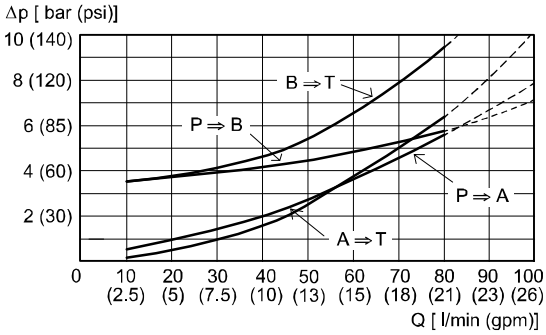

6 Dimensions & sectional view

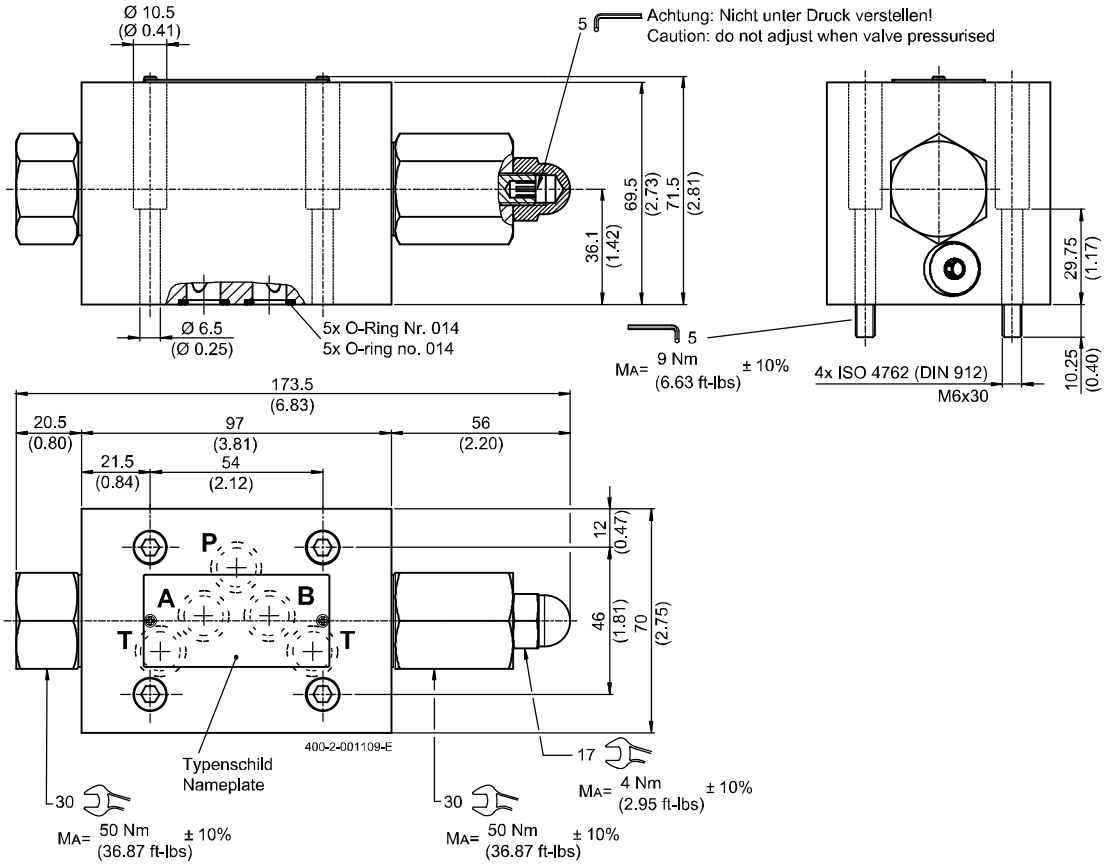

7 Setting system relief valve

- Switch off pump, alternatively reduce pressure to minimum (10 bar max.).
- To set the system relief valve, fist block the automatic reversal of the valve. Remove the dome nut, turn the offsetting spindle clockwise unit it hits its inner end stop. The spool is now clamped P ⇒ B, A ⇒ T.
- Start the pump. Set the required relief pressure.
- Stop the pump.
- Turn the offsetting spindle anticlockwise unit it hits its outer end stop, then replace the dome nut.

ATTENTION!

Never turn the offsetting spindle when the valve is pressurised, as this can cause seal damage. If necessary, switch of the pump.

8 Schematic section

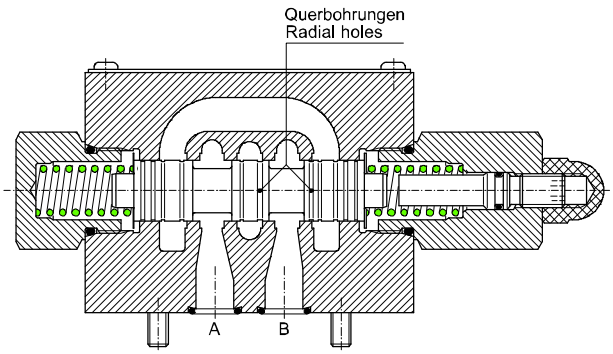

WWW.SUMY.IR

9 Safety instructions

IMPORTANT!:
When the pump is switched of (e.g. emergency switch in the plant), the valve spool will reset to P⇒ B, A ⇒T (the “Pump Start” position) after 0.5 secs (measured with fluid viscosity 33 cSt). The cylinder, connected as shown in the Application example, is ready to retract..

Deviation from the circuitry shown in the application example, and changes in the fluid viscosity can result in an increase in the minimum required reversal time.

10 Installation information

ATTENTION!
Maintenance work may only be carried out carefully by qualified personnel. The following must be observed when carrying out maintenance work on the valve (cleaning, seal change, etc.):
- Unscrew and remove dome nut, spring cap and screw plug
- Remove the 2 springs
- Carefully slide out the self-reversing spool
- The self-reversing spool is asymmetric and must not be reinserted the wrong way round, otherwise the normal Pump Start function P ⇒ B and A ⇒ T will be reversed to P ⇒ A and B ⇒ T. The correct spool orientation can be identified by the 2 small radial holes. The spool is factory-inserted so that these 2 holes are above the B port of the hydraulic interface

IMPORTANT!: When fitting new seals ensure that they are first well oiled or greased.

IMPORTANT!: Before refitting the spring cap the offsetting spindle must be fully retracted into the spring cap allow the spool to oscillate freely.

IMPORTANT!: Observe the correct tightening torques for spring cap plug and plastic dome nut.

11 Ordering code

Ex. WOF B – 10 _ – 1

WOF	=	4-way/2-position self-reversing valve
A … Q	=	standard model per current data sheet
Z … R	=	special features by arrangement on request
10	=	Nominal size 10
(blank)	=	NBR (nitril-butadien-rubber / BUNA) seals (**standard**)
V	=	FKM (fluorocarbon rubber / VITON) seals *(special seals - please consult BUCHER)*
1 … 9	=	technical design no. (omit when ordering)

12 Related data sheets

Reference	Description
400-P-050101	Interface NG 10 to ISO 4401-05-04

info.ch@bucherhydraulics.com www.bucherhydraulics.com

© 2023 by Bucher Hydraulics AG Frutigen, CH-3714 Frutigen
All rights reserved.
Data is provided for the purpose of product description only, and must not be construed as warranted characteristics in the legal sense. The information does not relieve users from the duty of conducting their own evaluations and tests. Because the products are subject to continual improvement, we reserve the right to amend the product specifications contained in this catalogue.

Classification: 430.300.300.305.305

2/2 Solenoid Operated Seat Valve, ISO Size 03

Q_{max} = 40 l/min (10 gpm), p_{max} = 315 bar (4500 psi)
Sandwich design, bidirectional leak-proof shutoff, direct acting, electrically operated
Series SWESD…

- With cartridge valve, type W1C.B…
- Interface to ISO 4401-03-02
- De-energized closed
- Guided valve spool and poppet
- Bidirectional leak-proof shutoff or flow
- With or without manual override
- The slip-on coil can be rotated, and it can be replaced without opening the hydraulic envelope
- Various plug-connector systems and voltages are available
- External cartridge parts with zinc-nickel plating

1 Description

Series SWESD… sandwich valves are high performance, 2/2 solenoid operated seat valves with a size 03 interface to ISO 4401-03-02. The main components of the valves are a sandwich body (stack-mounting body) and the push-in 2/2 directional seat valve cartridges (type W1C…). The 2/2 solenoid operated cartridge seat valve is designed on the poppet/seat principle, and is therefore virtually leak-free in both directions of flow (bidirectional seat-valve shut-off). These sandwich valves can be supplied as de-energized-closed (see symbols). These 2/2 solenoid operated cartridge seat valve are predominantly used in certain mobile and industrial applications where leak-tight shut-off functions are crucially important. Examples are where loads, tensions, or clamping forces must be held without leakage. All external parts of the cartridge are zinc-nickel plated according to DIN EN ISO 19 598 and are thus suitable for use in the harshest operating environments. The slip-on coils can be replaced without opening the hydraulic envelope and can be positioned at any angle through 360°. The sandwich body is sealed at its manifold side (the connections side) by means of O-rings fitted in counterbores.

2 Technical data

General characteristics	Description, value, unit
Designation	2/2 solenoid operated seat valve
Design	sandwich design, bidirectional leak-proof shutoff, direkt acting, electrically operated
Mounting method	4 x ∅ 5.4 holes for M5 cap screws
Size	size 03 interface to ISO 4401-03-02 / DIN 24 340 A6
Weight	2.25 kg (1 solenoid) 2.90 kg (2 solenoid)
Mounting attitude	unrestricted
$MTTF_D$ values	150 years, see data sheet 400-P-010101-en
Surface corrosion protection	without

Hydraulic characteristics	Description, value, unit	
Maximum operating pressure	315 bar	(4500 psi)
Maximum flow rate	40 l/min	(10 gpm)
Flow direction	see symbols	
Hydraulic fluid	HL and HLP mineral oil to DIN 51 524; for other fluids, please contact BUCHER	
Ambient temperature range [1)]	-25 °C … +80 °C	(-13 °F … 176 °F)

Hydraulic characteristics	Description, value, unit
Hydraulic fluid temperature range	-25 °C … +80 °C (-13 °F … 176 °F)
Viscosity range	10…500 mm^2/s (cSt), recommended 15...250 mm^2/s (cSt)
Minimum fluid cleanliness Cleanliness class to ISO 4406 : 1999	class 20/18/15

Electrical characteristics	Description, value, unit
Supply voltage	12 V DC, 24 V DC / 115 V AC, 230 V AC (50 … 60 Hz) others by consultation
Supply voltage tolerance	± 10 %
Ambient temperature range[1)]	-25 °C … +50 °C (-13 °F … 122 °F)
Nominal power consumption	V DC = 30 … 32 W / V AC = 31 … 32 W
Switching time	refer to cartridge valve - see “Related data sheets”
Relative duty cycle	100 %
Protection class to ISO 20 653 / EN 60 529	IP 65 / IP 67 / IP 69K, see “Ordering code” (with appropriate mating connector and proper fitting and sealing)
Electrical connection	DIN EN 175301-803, 3-pin 2 P+E (standard) for other connectors, see “Ordering code”

IMPORTANT!:

1) The less favourable values from the hydraulic and electrical characteristics determine the temperature range of the whole valve.

IMPORTANT!
To ensure the performance data is not compromised, it is imperative to use coils D45/207 according to data sheet 400-P-120120.

3 Symbol

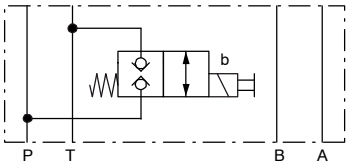

SWESD-PT-6…

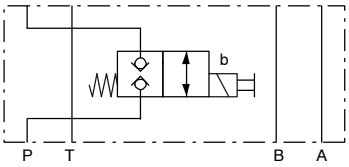

SWESD-P-6…

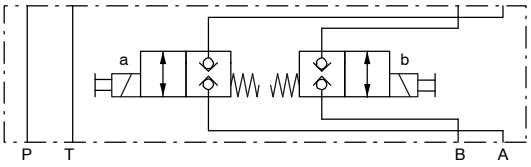

SWESD-AB-6…

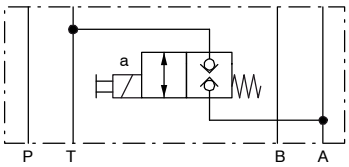

SWESD-AT-6…

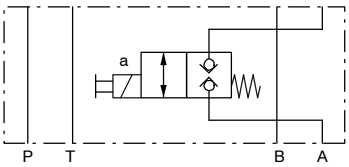

SWESD-A-6…

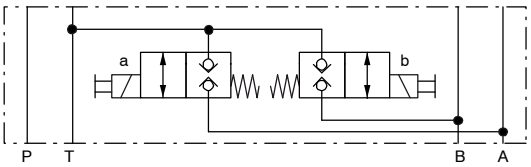

SWESD-ABT-6…

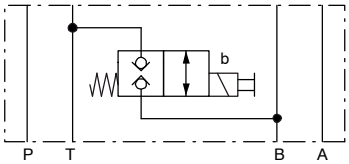

SWESD-BT-6…

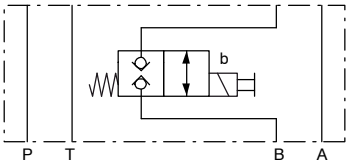

SWESD-B-6…

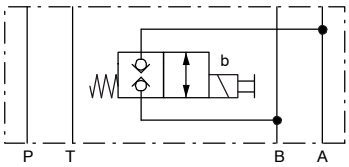

SWESD-ABK-6…

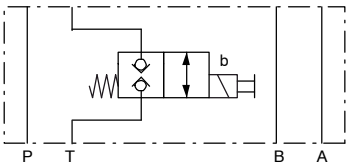

SWESD-T-6…

4 Performance graphs

IMPORTANT!
Detailed performance figures and other hydraulic characteristics can be found in the data sheet for the 2/2 solenoid operated cartridge valve that is fitted (series W1C…). See “Related data sheets”.

ATTENTION!
The performance figures in the data sheet for the cartridge valve refer just to the cartridge itself. Take into account the additional pressure drop in the body into which it is fitted.

5 Dimensions & sectional view

2/2 solenoid operated directional seat valve (single-solenoid model - solenoid A- or B-sided)

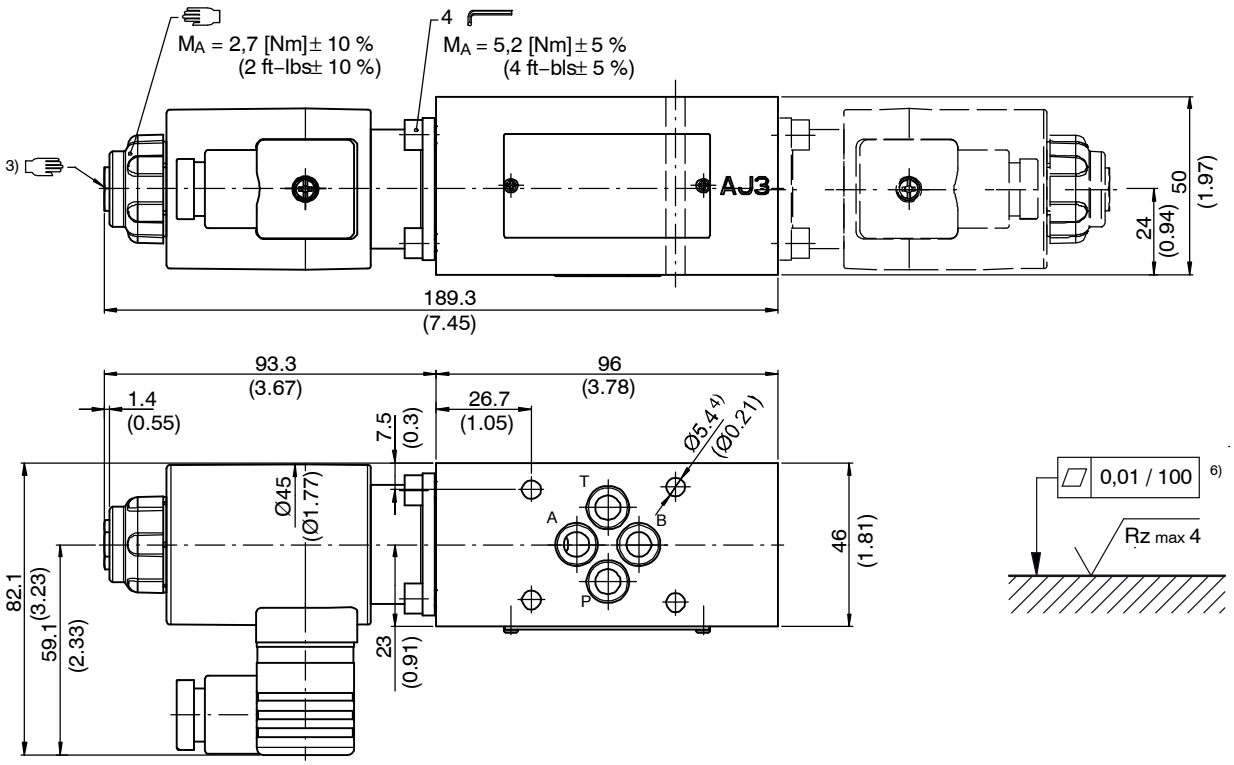

2/2 solenoid operated directional seat valve (double-solenoid model)

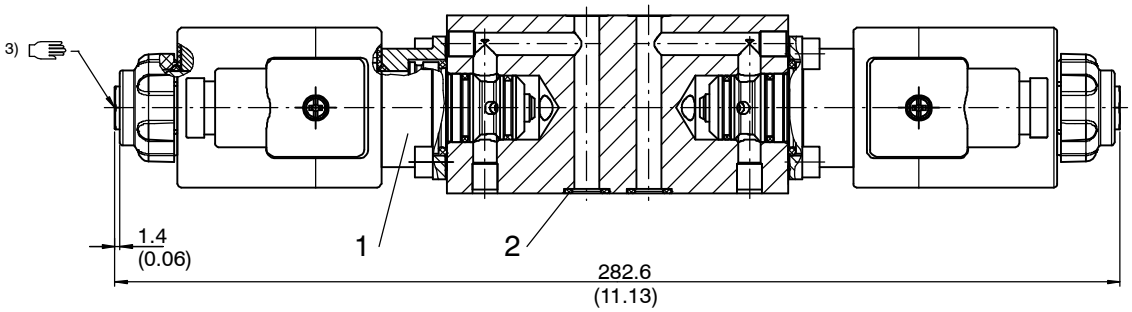

NBR seal kit no. DS-117-N 5)

Item	Qty.	Description
1	4	O-ring no. 012 ∅ 9,25 x 1,78 N90
2	2	NBR seal kit no. DS-467-N for seat valve, type W1...

IMPORTANT!

3) Can be chosen **with** or **without** manual override. (see ordering code)

4) Valve mounting bolts M5 (not included in the delivery)

5) Seal kit with Viton seals, no. DS-117-V

6) Required surface finish on the mounting face (valve pad)

IMPORTANT!

When replacing an old coil with connection according to DIN 43650/ISO4400 (with other Pin set-up than according to datasheet 400-P-120120), the new coil can be mounted in 180° reversed position so that the existing plug (with 180° earthing-PIN) can be connected.
This does not affect the performance data.

6 Installation information

IMPORTANT!

When installing the valve, make sure that the mating face (the manifold interface) aligns with the valve interface. Do not confuse the sandwich valve's manifold side and directional-valve side. No adjustments are necessary, since the cartridges are set in the factory.

ATTENTION!

Only qualified personnel with mechanical skills may carry out any maintenance work. Generally, the only work that should ever be undertaken is to check, and possibly replace, the seals. When changing seals, oil or grease the new seals thoroughly before fitting them.

7 Ordering code

Ex. S W E S D - P - 6 - _ 24D _

S	=	sandwich design
W	=	directional valve
E	=	solenoid operated, V DC = 8 W
S	=	seat-valve design (bidirectional shut-off)
D ... Q	=	standard model - see relevant data sheets
Z ... R	=	special features - please consult BUCHER
P	=	function in P
A	=	function in A
B	=	function in B
T	=	function in T
AB	=	function in A and B
ABK	=	function in A to B and B to A (short circuit function)
PT	=	function in P to T
AT	=	function in A to T
BT	=	function in B to T
ABT	=	function in A and B to T
6	=	ISO size 03 interface
(blank)	=	NBR (Nitrile) seals (**standard**)
V	=	FKM (Viton) seals (special seals - please contact BUCHER)
...	=	voltage e.g. **24** (24 V)
(blank)	=	DIN EN 175301-803 connection with mating plug (**standard, IP 65**)
M100	=	DIN EN 175301-803 connection without mating plug
		for the following plug-variants [mating plug not supplied]:
DT	=	Deutsch plug connection DT04-2P (with quenching diode, IP 67/69K)
JT	=	Junior Timer radial plug connection (with quenching diode, IP 65)
F	=	flying leads (600mm) (IP 65)

please consult Bucher

8 Related data sheets

Reference	(Old no.)	Description
400-P-030501		Size 03 interface to ISO 4401-03-02
400-P-120120		Solenoid coil, series D45/207
400-P-110111		2/2 solenoid cartridge valve, type W1C.B… size 6
400-P-010101		$MTTF_D$ values for hydraulic valves

info.ch@bucherhydraulics.com www.bucherhydraulics.com

© 2021 by Bucher Hydraulics AG Frutigen, CH-3714 Frutigen
All rights reserved.
Data is provided for the purpose of product description only, and must not be construed as warranted characteristics in the legal sense. The information does not relieve users from the duty of conducting their own evaluations and tests. Because the products are subject to continual improvement, we reserve the right to amend the product specifications contained in this catalogue.

Classification: 430.300. - .330.330.300

2/2 Solenoid Operated Seat Valve, ISO Size 03

Q_{max} = 20 l/min (5.3 gpm), p_{max} = 315 bar (4500 psi)
Sandwich design, bidirectional leak-proof shutoff, direct acting, with EX-safety sol. coil
Series EEX-SWESD…

Valve:
- With cartridge valve, type EEX-W1C.B…
- Interface to ISO 4401-03-02
- De-energized closed
- Guided valve spool and poppet
- Bidirectional leak-proof shutoff or flow

Solenoid coil:
- To IEC/EN 60079-0, IEC/EN 60079-7, IEC/EN 60 079-18
- For equipment in Category 2 (Zones 1 and 2)
- Certificate of conformity: BASEEFA 02 ATEX 0199 X

Ex II 2 G Ex e mb IIC T4 Gb

1 Description

Series EEX-SWESD… sandwich valves are high performance, 2/2 solenoid operated seat valves with a size 03 interface to ISO 4401-03-02. An EX-protected solenoid for explosive gas atmospheres (II 2 G) is used to provide electrical operation of the cartridge. The main components of the valves are a sandwich body (stack-mounting body) and the push-in 2/2 directional seat valve cartridge (type EEX-W1C.B…). The 2/2 solenoid operated cartridge seat valve is designed on the poppet/seat principle, and is therefore virtually leak-free in both directions of flow (bidirectional seat-valve shut-off). These sandwich valves can be supplied as de-energized-closed (see symbols). These 2/2 solenoid operated cartridge seat valve are predominantly used in certain mobile and industrial applications where leak-tight shut-off functions are crucially important. Examples are where loads, tensions, or clamping forces must be held without leakage. All external parts of the valves are plated and are thus suitable for use operating environments. The sandwich body is sealed at its manifold side (the connections side) by means of O-rings fitted in counterbores.
Ex: Solenoid conforms to the European standards IEC/EN 60079-0, IEC/EN 60079-7, IEC/EN 60079-18
e: Increased safety
mb: Encapsulation
Group IIC: For use in explosive gas atmospheres
T4: Max. surface temperature 135 °C
Gb: For use in Zone 1 (Zone 2) with foreseeable faults
Certificate of conformitys:
BASEEFA 02 ATEX 0199 X
IECEx BAS13.0093 X (on request)

2 Technical data

General characteristics	Description, value, unit
Designation	2/2 solenoid operated seat valve
Design	sandwich design, bidirectional leak-proof shutoff, direkt acting with EX-protected solenoid
Mounting method	4 x ∅ 5.4 holes for M5 cap screws
Size	size 03 interface to ISO 4401-03-02 / DIN 24 340 A6
Weight	2.8 kg (1 solenoid) 4.00 kg (2 solenoid)
Mounting attitude	unrestricted
Ambient temperature range	see hydraulic and electrical characteristics
Surface corrosion protection	without

Hydraulic characteristics	Description, value, unit	
Maximum operating pressure	315 bar	(4500 psi)
Maximum flow rate	20 l/min	(5.3 gpm)
Flow direction	see symbols	
Hydraulic fluid	HL and HLP mineral oil to DIN 51 524; for other fluids, please contact BUCHER	
Ambient temperature range [1)]	-25 °C … +80 °C	(-13 °F … +122 °F)
Hydraulic fluid temperature range [1)]	-25 °C … +80 °C [2)]	(-13 °F … +176 °F) [2)]
Viscosity range	10…500 mm^2/s (cSt), recommended 15...250 mm^2/s (cSt)	
Minimum fluid cleanliness Cleanliness class to ISO 4406 : 1999	class 20/18/15	

Electrical characteristics	Description, value, unit	
Supply voltage	24 V DC 230 V AC In AC solenoids, rectifier is integrated.	
Supply voltage tolerance	± 10 %	
Ambient temperature range [1)]	-40 °C … +40 °C (Operation as T4)	(-40 °F … +104 °F)
Temperatue class	T1 … T4	
EX-protection marking	II 2 G, Ex e mb IIC T4 Gb	
Nominal power consumption	31,9 W at 20 °C	(31.9 W at 68 °F)
Relative duty cycle	100 %	
Protection class to ISO 20 653 / EN 60 529	IP 54 (with properly fitted cable gland and properly made cable connection)	
Electrical connection	Shipped **without** cable gland (M20 x 1.5) and **without** cable Cable-entry temperature may exceed 70 °C	

IMPORTANT!:

[1)] The less favourable values from the hydraulic and electrical characteristics determine the temperature range of the whole valve.

IMPORTANT!:

[2)] The maximum fluid temperature must not exceed the permissible ambient temperature for the whole valve.

3 Symbol

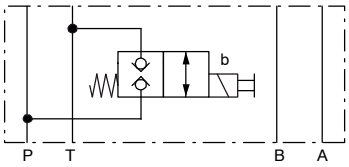

SWESD-PT-6…

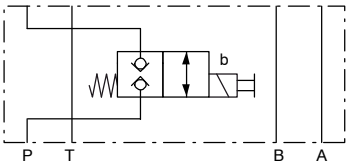

SWESD-P-6…

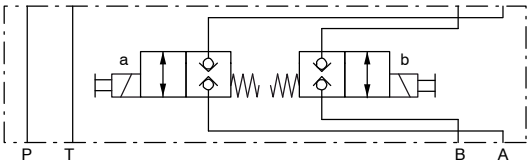

SWESD-AB-6…*

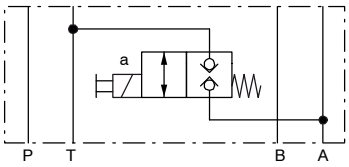

SWESD-AT-6…

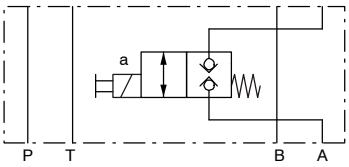

SWESD-A-6…

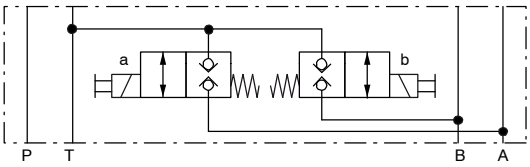

SWESD-ABT-6…*

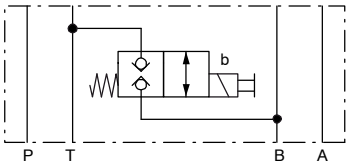

SWESD-BT-6…

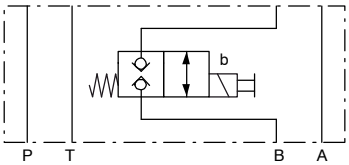

SWESD-B-6…

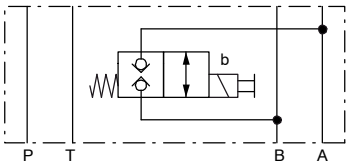

SWESD-ABK-6…

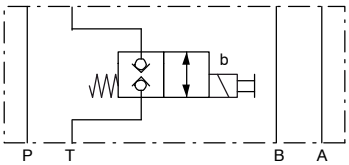

SWESD-T-6…

*** Unacceptable heating-up**
Energizing solenoids a and b simultaneously is not permitted!

4 Performance graphs

IMPORTANT!
Detailed performance data and other hydraulic characteristics can be found in the data sheet for the respective 2/2 solenoid operated cartridge seat valve (series EEX-W1C.B…) that is fitted. See “Related data sheets”.

ATTENTION!
The performance figures in the data sheet for the cartridge valve refer just to the cartridge itself. Take into account the additional pressure drop in the body into which it is fitted.

5 Installation information

COMMISSIONING

- For short-circuit protection, each solenoid must be preceded by a fuse conforming to B588 or IEC269 with a maximum rating of 2 A (AC) or 6 A (DC).
- The solenoid coils must only be operated when they are fitted on the associated valve. For more information on installation and commissioning, please refer to the operating instructions supplied with the solenoid coil.

ATTENTION!
Ratings given in the operating instructions
Pay attention to the relevant operating instructions! If in doubt, the ratings in the operating instructions apply.

ATTENTION!
Only qualified personnel with mechanical skills may carry out any maintenance work. Generally, the only work that should ever be undertaken is to check, and possibly replace, the seals. When changing seals, oil or grease the new seals thoroughly before fitting them.

ATTENTION!

Authorised persons
The tasks described here may only be carried out by authorised personnel. Authorised personnel are those who have electro-technical training (EN 60204-1).

IMPORTANT!
When fitting the cartridges, use the specified tightening torque for the mounting bolts. The marking "Valve End" on the adapter sleeve must be mounted towards the valve flange! No adjustments are necessary, since the cartridges are set in the factory.

IMPORTANT!
Minimum dimensions of the mating body
101 x 46 x 43 mm
See also the user manual.

IMPORTANT!
When installing the valve, make sure that the mating face (the manifold interface) aligns with the valve interface. Do not confuse the sandwich valve's manifold side and directional-valve side. No adjustments are necessary, since the cartridges are set in the factory.

6 Dimensions & sectional view

2/2 solenoid operated directional seat valve (single-solenoid model - solenoid A- or B-sided)

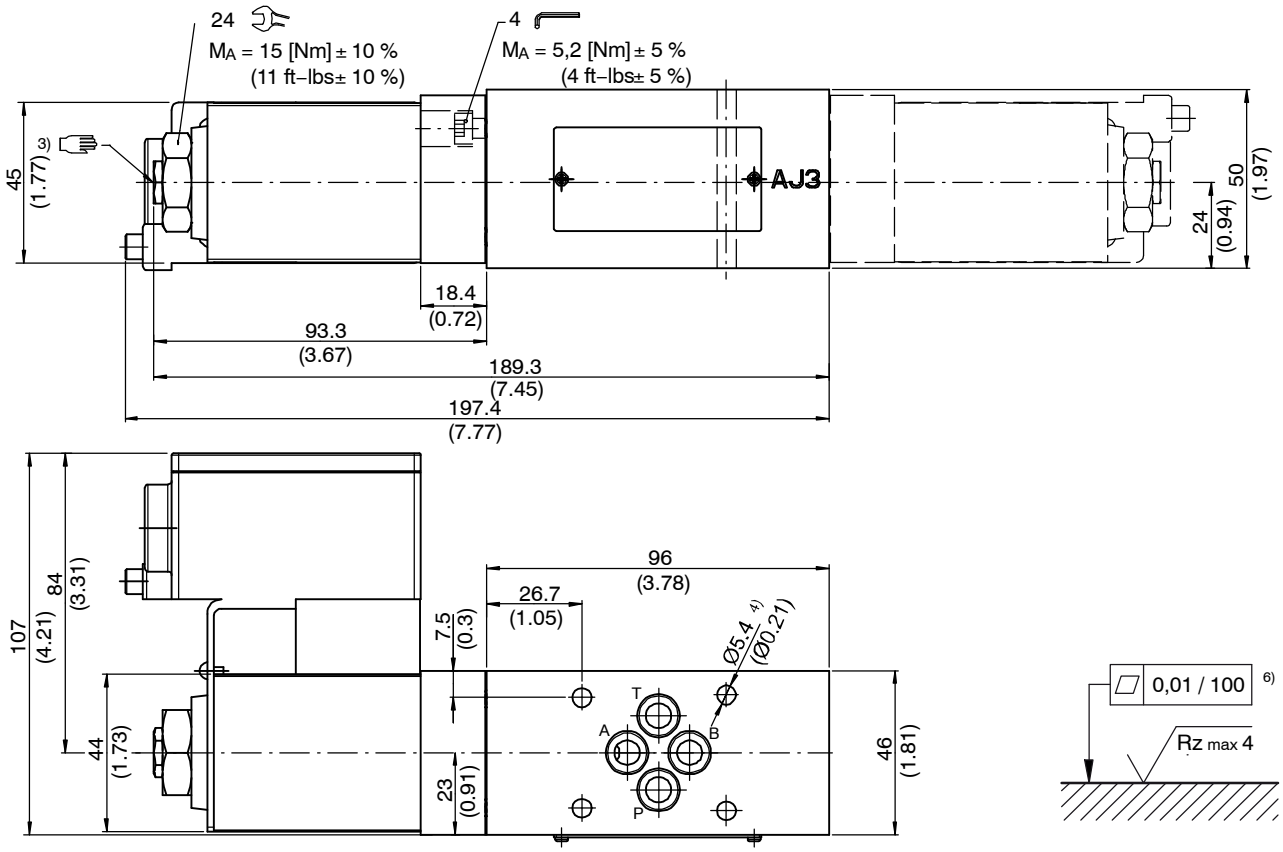

2/2 solenoid operated directional seat valve (double-solenoid model)

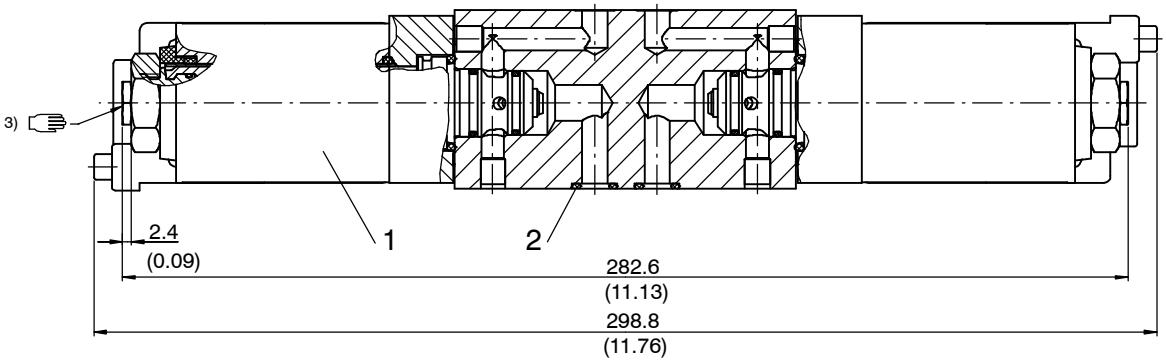

WWW.SUMY.IR

NBR seal kit no. DS-474-N [5]

Item	Qty.	Description
1	4	O-ring no. 012 ∅ 9,25 x 1,78 N90
2	2	NBR seal kit no. DS-263-N for seat valve, type EEX-W1...

IMPORTANT!

[3] Can be chosen **with** or **without** manual override. (see ordering code)

[4] Valve mounting bolts M5 (not included in the delivery)

[5] Seal kit with Viton seals, no. DS-474-V

[6] Required surface finish on the mounting face (valve pad)

7 Ordering code

Ex. EEX - S W E S D - P - 6 - _ 24 D

EEX	=	EX-protected sol. coil instead of standard sol. coil (for details, see electrical characteristics)
S	=	sandwich design
W	=	directional valve
E	=	solenoid operated
S	=	seat-valve design (bidirectional shutoff)
D ... Q	=	standard model - see relevant data sheets
Z ... R	=	special features - please consult BUCHER
P	=	function in P
A	=	function in A
B	=	function in B
T	=	function in T
AB	=	function in A and B
ABK	=	function in A to B and B to A (short circuit function)
PT	=	function in P to T
AT	=	function in A to T
BT	=	function in B to T
ABT	=	function in A and B to T
6	=	ISO size 03 interface
(blank)	=	NBR (Nitrile) seals (**standard**)
V	=	FKM (Viton) seals (special seals - please contact BUCHER)
...	=	voltage e.g. **24** (24 V)
D	=	current DC
A	=	current AC

8 Related data sheets

Reference (Old no.)	Description
400-P-030501	Size 03 interface to ISO 4401-03-02
400-P-110210	2/2 solenoid cartridge valve, type EEX-W1C.B… size 6
D14-2117D	Operating instructions for solenoid coil DC LISK
K14-2068D	Operating instructions for solenoid coil AC LISK
D14-2130D3	Operating instructions for solenoid coil DC LISK IEC (on request)
D14-2078D3	Operating instructions for solenoid coil AC LISK IEC (on request)

info.ch@bucherhydraulics.com www.bucherhydraulics.com

© 2023 by Bucher Hydraulics AG Frutigen, CH-3714 Frutigen
All rights reserved.
Data is provided for the purpose of product description only, and must not be construed as warranted characteristics in the legal sense. The information does not relieve users from the duty of conducting their own evaluations and tests. Because the products are subject to continual improvement, we reserve the right to amend the product specifications contained in this catalogue.

Classification: 430.300. - .330.330.300

BUCHER hydraulics
WWW.SUMY.IR

Stacking 2/2 Directional Valve, ISO size 3
Solenoid Controlled, Seated Pilot, Seated Spool Main Stage
Series SWR22..EDA ...-6 and SWRA22..EDA ...-6

- 315 bar, 60 l/min
- With two-stage, solenoid controlled 2/2 cartridge valve, type WR22 ...-10 and valve, type WRA22..-10
- 'No flow' pilot stage
- All ports rated to 315 bar
- P-line functions have a secondary pressure gauge connection M (G 1/4")
- Corrosion protection: stacking body is zinc-phosphated
- With ISO 4401 / CETOP R35H size 3, NFPA D03, DIN 24 340 A6 interface

1. Description

Series SWR22 ...-6 stack valves are two-stage units, the pilot and main stages both being of seated design. The stack valve types according the symbols 1 ... 6 (check IN functions) are equipped with the 2/2 solenoid cartridge valve type WR22O...-10 or WR22G...-10. The stack valve types according the symbols 7 ... 10 (check OUT functions) are equipped with the 2/2 solenoid cartridge valve type WRA22O...-10 or WRA22G...-10. The valve design features screw-in cartridges, thus ensuring straightforward, very user friendly maintenance. On the models shown in symbols 1 ... 6, sealing at the manifold-side ('bottom') interface is by means of O-rings that are fitted in counter-bores in the stacking body. On the models shown in symbols 7 ... 10, sealing at the manifold-side ('bottom') interface is by means of a seal plate with 5 O-rings. An intermediate plate is also required at the directional valve-side ('top') interface.

2. Symbols

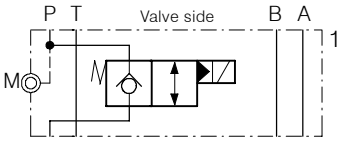

SWR22GEDA-P-E-6 ...

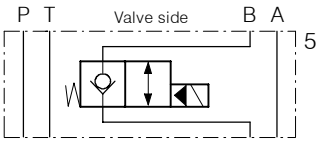

SWR22GEDA-BZ-D-6 ...

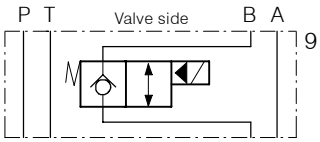

SWRA22GEDA-BA-D-6 ...

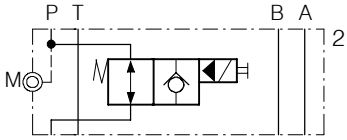

SWR22OEDA-P-E-6 ...

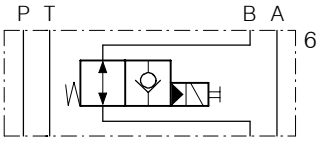

SWR22OEDA-BZ-D-6 ...

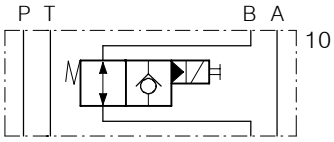

SWRA22OEDA-BA-D-6 ...

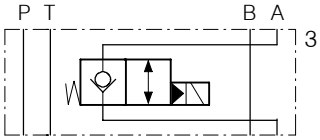

SWR22GEDA-AZ-C-6 ...

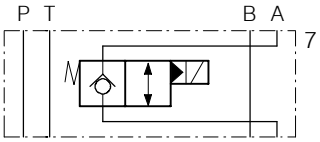

SWRA22GEDA-AA-C-6 ...

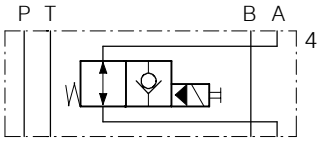

SWR22OEDA-AZ-C-6 ...

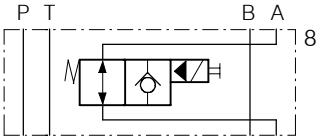

SWRA22OEDA-AA-C-6 ...

3. Dimensions

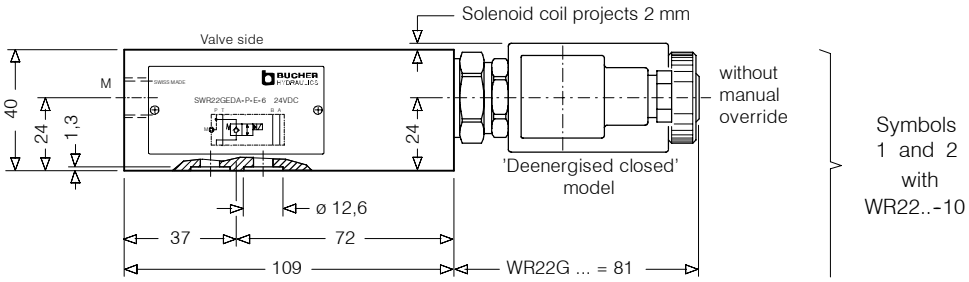

Classification: 430.10.60.12
Reference: 400-P-230120-EN-a/09.15

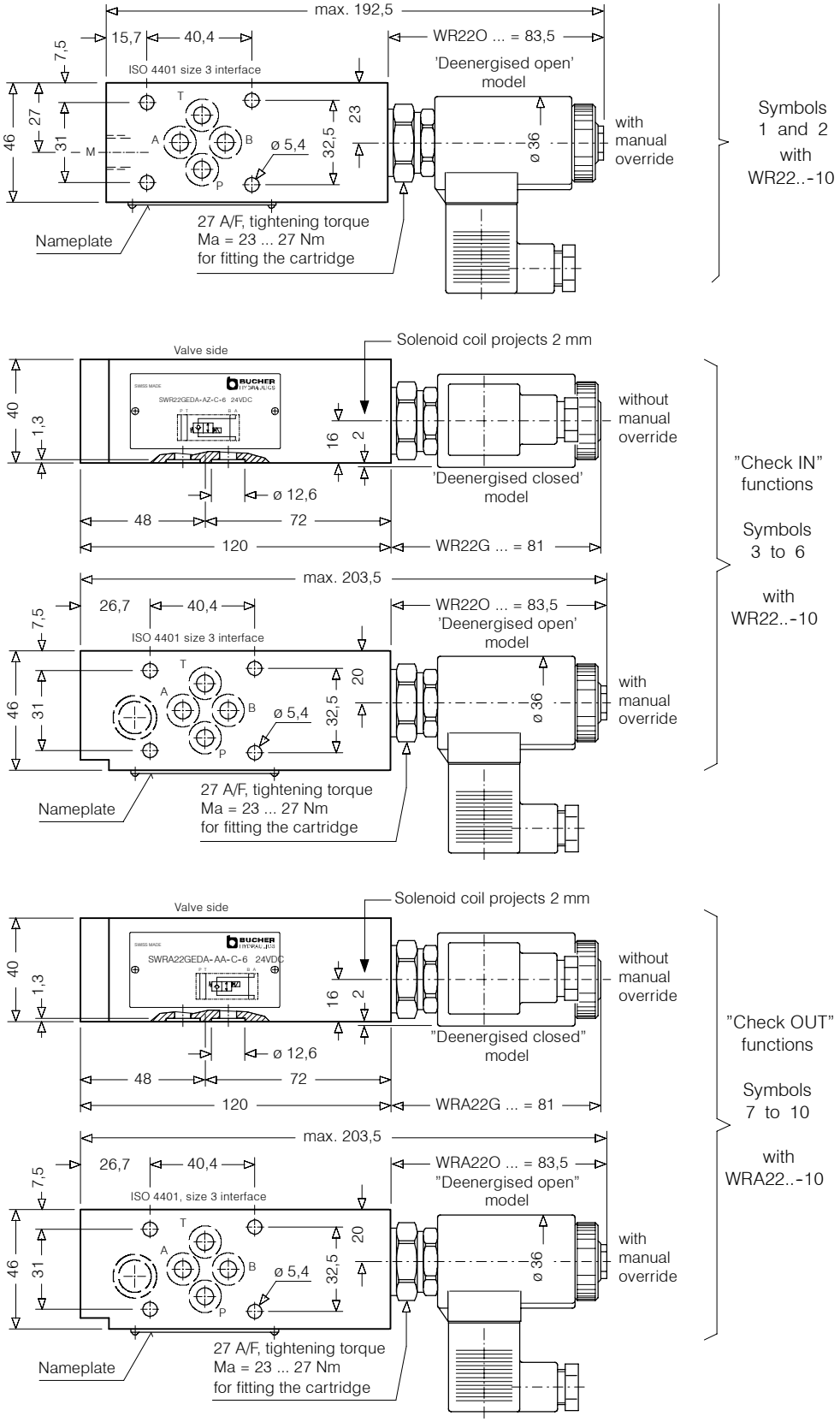
max. 192,5
15,7
40,4
WR22O ... = 83,5
'Deenergised open' model
ISO 4401 size 3 interface
7,5
27
46
31
M
T
A
B
P
ø 5,4
32,5
23
ø 36
with manual override
Nameplate
27 A/F, tightening torque
Ma = 23 ... 27 Nm
for fitting the cartridge
Symbols 1 and 2 with WR22..-10
Valve side
Solenoid coil projects 2 mm
SWR22GEDA-AZ-C-6 24VDC
40
1,3
16
2
without manual override
'Deenergised closed' model
ø 12,6
48
72
120
WR22G ... = 81
"Check IN" functions
Symbols 3 to 6
with WR22..-10
max. 203,5
26,7
40,4
WR22O ... = 83,5
'Deenergised open' model
ISO 4401 size 3 interface
7,5
46
31
20
32,5
ø 5,4
ø 36
with manual override
Nameplate
27 A/F, tightening torque
Ma = 23 ... 27 Nm
for fitting the cartridge
Valve side
Solenoid coil projects 2 mm
SWRA22GEDA-AA-C-6 24VDC
40
1,3
16
2
without manual override
"Deenergised closed" model
ø 12,6
48
72
120
WRA22G ... = 81
"Check OUT" functions
Symbols 7 to 10
with WRA22..-10
max. 203,5
26,7
40,4
WRA22O ... = 83,5
"Deenergised open" model
ISO 4401, size 3 interface
7,5
46
31
20
32,5
ø 5,4
ø 36
with manual override
Nameplate
27 A/F, tightening torque
Ma = 23 ... 27 Nm
for fitting the cartridge

4. Schematic section

showing the relevant ports
Ex. SWR22GEDA-AZ-C-6 ... (Check IN function)

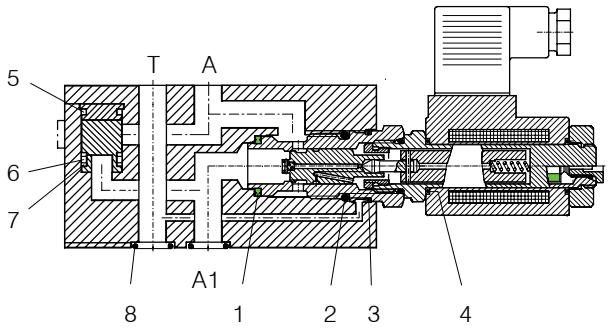

Ex. SWR22GEDA-AA-D-10 ... (Check OUT function)

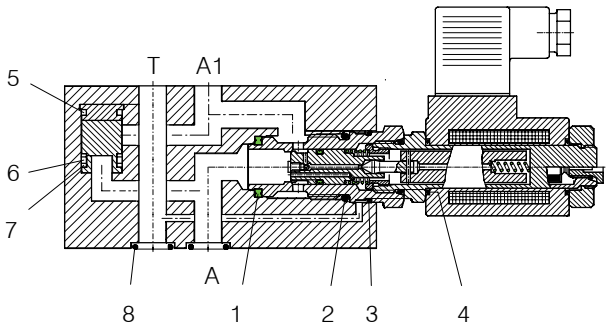

Seal kit no. DS-309, comprising *):

Itm.	Qty.	Qty.	Description	Size
1	1*)	1	Seal ring	∅ 22,1 / 16,5 x 2,5
2	1*)	1	O-ring no. 117	∅ 20,29 x 2,62 N90
3	1*)	1	O-ring no. 020	∅ 21,95 x 1,78 N90
4	2*)	2	O-ring	∅ 16,00 x 2,00 Viton
5	1*)	-	O-ring no. 015	∅ 14,00 x 1,78 N90
6	1*)	-	O-ring no. 012	∅ 9,25 x 1,78 N90
7	2*)	-	Backup ring	∅ 12,5 / 9,4 x 1,4
8	4*)	4	O-ring no. 012	∅ 9,25 x 1,78 N90

SWRA22.. EDA-P-E-6 ...
SWRA22..EDA-BA/BZ-D-6 ... &
SWRA22.. EDA-AA/AZ-C-6 ...

5. Installation and servicing

All installation and servicing must be carried out with care, and by qualified personnel only. At installation, make sure that the valve interface aligns with the interface of the mating surface and do not confuse the directional valve ('top') and manifold ('bottom') faces of the valve. When changing seals, the new seals should be thoroughly oiled or greased before they are fitted. When fitting the cartridge, ensure that the seals are oiled or greased and use the specified tightening torque.

6. Ordering code

Ex. S | WS22GNDA - A Z - C - 6 _ | 24 VDC

S = stack-mounting valve

WR22GEDA = directional valve, deenergised closed
WR22OEDA = directional valve, deenergised open
WRA22GEDA = directional valve, deenergised closed
WRA22OEDA = directional valve, deenergised open

P = function in P
A = function in A
B = function in B

A = check OUT function
Z = check IN function

C = stacking body type C (..AZ.. / ..AA..)
D = stacking body type D (..BZ.. / ..BA..)
E = stacking body type E (..P..)

6 = nominal size 6 mm

(blank) = Nitrile seals (standard)
V = Viton seals
Special seals by arrangement

Voltage and current plainly specified

7. Related data sheets

Old no.	New no.	
i - 00	400-P-010101-E	Table of interface equivalents
i - 31	400-P-030501-E	DIN 24 340 size A6 interface
W - 6.155	400-P-131110-E	2/2 Solenoid Cartridge Valve WR22 ...-10
W - 6.160	400-P-131120-E	2/2 Solenoid Cartridge Valve WRA22 ...-10

info.ch@bucherhydraulics.com www.bucherhydraulics.com

© 2015 by Bucher Hydraulics AG Frutigen, CH-3714 Frutigen
All rights reserved.
Data is provided for the purpose of product description only, and must not be construed as warranted characteristics in the legal sense. The information does not relieve users from the duty of conducting their own evaluations and tests. Because the products are subject to continual improvement, we reserve the right to amend the product specifications contained in this catalogue.

Stacking 2/2 Directional Valve, ISO size 3
Solenoid Controlled, Seated Design
Series SWR22..EA...-6

- 315 bar, 40 l/min
- With two-stage, solenoid controlled 2/2 cartridge valve, type WR22 ..EA5
- All ports rated to 315 bar
- Corrosion protection: body zinc-phosphated, exposed cartridge parts zinc-plated
- With ISO 4401 / CETOP R35H size 3, NFPA D03, DIN 24 340 A6 interface

1. Description

Series SWR22 ...-6 stack valves are two-stage units, the pilot and main stages both being of seated design. They are equipped with the 2/2 solenoid cartridge valve type WR22...EA5. The valve design features screw-in cartridges, thus ensuring straightforward, very user-friendly maintenance. Interface sealing is by means of a seal plate and 5 O-rings.

2. Symbols

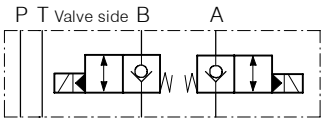

SWR22GEA-ABZ-JL-6 ...

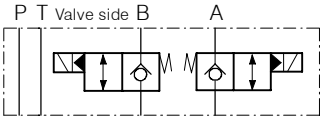

SWR22GEA-ABA-JL-6 ...

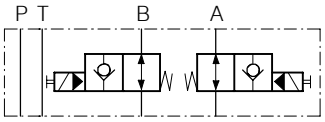

SWR22OEA-ABZ-JL-6 ...

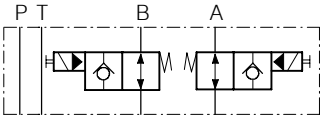

SWR22OEA-ABA-JL-6 ...

By turning a valve upside down about its long axis, the 'Check IN' functions (symbols 1 and 2) be-come 'Check OUT' functions (symbols 3 and 4)

3. Dimensions

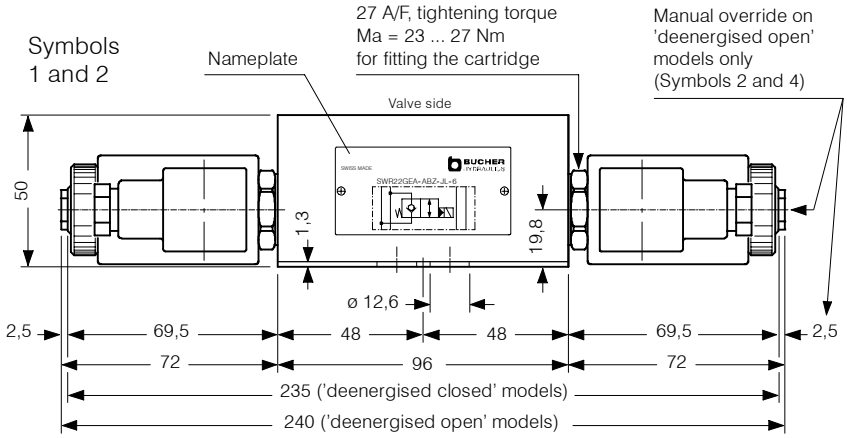

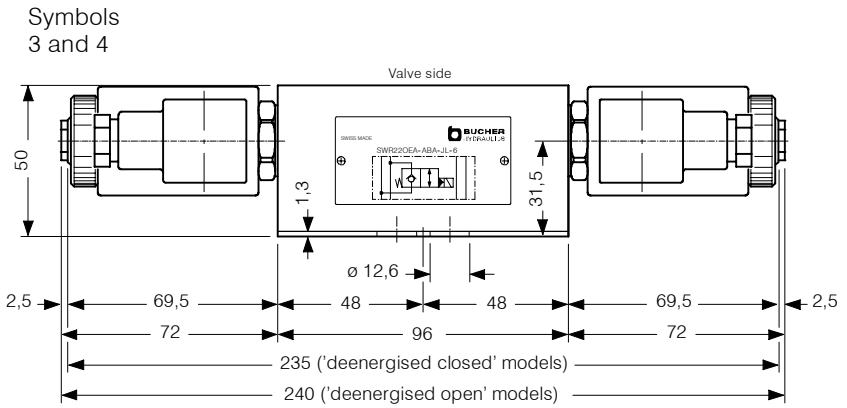

Classification: 430.10.60.12
Reference: 400-P-230125-EN-/09.15

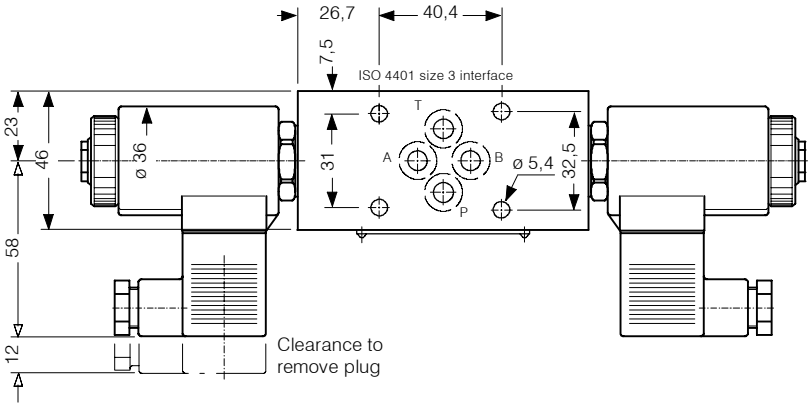

4. Schematic section

showing the relevant ports
Ex. SWR22GEA-ABA-JL-6 ...

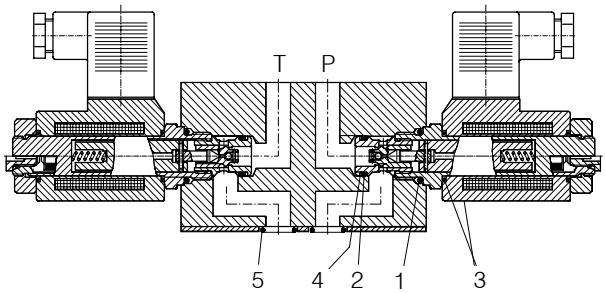

Seal kit no. DS-310, comprising:

Itm.	Qty.	Description	Size
1	2	O-ring no. 017	∅ 17,17 x 1,78 N90
2	2	O-ring no. 014	∅ 12,42 x 1,78 N90
3	4	O-ring	∅ 16,00 x 2,00 Viton
4	2	Backup ring	∅ 15,9 / 13 x 1
5	4	O-ring no. 012	∅ 9,25 x 1,78 N90

5. Installation and servicing

All installation and servicing must be carried out with care, and by qualified personnel only. At installation, make sure that the valve interface aligns with the interface of the mating surface and do not confuse the directional valve ('top') and manifold ('bottom') faces of the valve. When changing seals, the new seals should be thoroughly oiled or greased before they are fitted. When fitting the cartridge, ensure that the seals are oiled or greased and use the specified tightening torque.

6. Ordering code

Ex. S | WR22GEA - AB | A - JL - 6 | _ | 24 VDC

S = stack-mounting valve
WR22GEA = directional valve, deenergised closed
WR22OEA = directional valve, deenergised open
AB = function in A ⇒ A und B ⇒ B
Z = check IN function
A = check OUT function
JL = stacking body type JL
6 = nominal size 6 mm
(blank) = Nitrile seals (standard)
V = Viton seals
Special seals by arrangement
Voltage and current plainly specified

7. Related data sheets

Old no.	New no.	
i - 00	400-P-010101-E	Table of interface equivalents
i - 31	400-P-030501-E	DIN 24 340 size A6 interface
W - 2.155	400-P-121120-E	2/2 Solenoid Cartridge Valve WR22..EA5

info.ch@bucherhydraulics.com www.bucherhydraulics.com

© 2015 by Bucher Hydraulics AG Frutigen, CH-3714 Frutigen
All rights reserved.
Data is provided for the purpose of product description only, and must not be construed as warranted characteristics in the legal sense. The information does not relieve users from the duty of conducting their own evaluations and tests. Because the products are subject to continual improvement, we reserve the right to amend the product specifications contained in this catalogue.

Stacking 2/2 Directional Valve, ISO size 3
Solenoid Controlled, Seated Design
Series SWRA22..ECA...-6

- 315 bar, 80 l/min
- With two-stage, solenoid controlled 2/2 cartridge valve, type WRA22 ..-10
- 'No flow' pilot stage
- All ports rated to 315 bar
- Corrosion protection: body zinc-phosphated, exposed cartridge parts zinc-plated
- With ISO 4401 / CETOP R35H size 3, NFPA D03, DIN 24 340 A6 interface

1. Description

Series SWRA22 ...-6 stack valves are two-stage units, the pilot and main stages both being of seated design. They are equipped with the 2/2 solenoid cartridge valve type WRA22G...-10 or WRA22O...-10. The valve design features screw-in cartridges, thus ensuring straightforward, very user-friendly maintenance. Sealing at the manifold-side ('bottom') interface is by means of O-rings that are fitted in counterbores in the stacking body.

2. Symbols

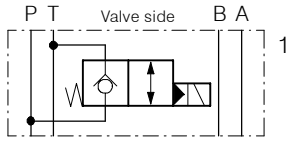

SWRA22GECA-PT-FB-6

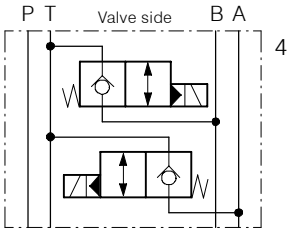

SWRA22GECA-ABT-J-6

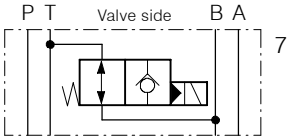

SWRA22OECA-BT-FA-6

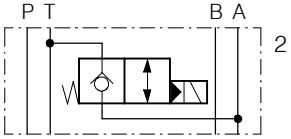

SWRA22GECA-AT-F-6

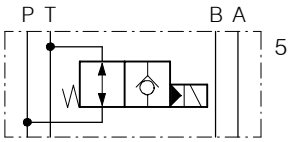

SWRA22OECA-PT-FB-6

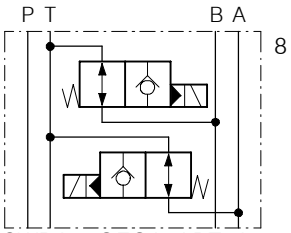

SWRA22OECA-ABT-J-6

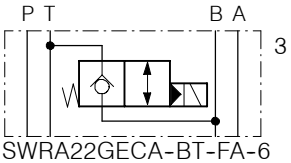

SWRA22GECA-BT-FA-6

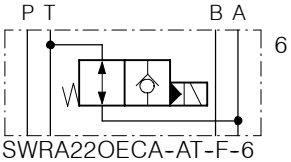

SWRA22OECA-AT-F-6

3. Dimensions

Symbols 1 ... 3
Symbols 5 ... 7

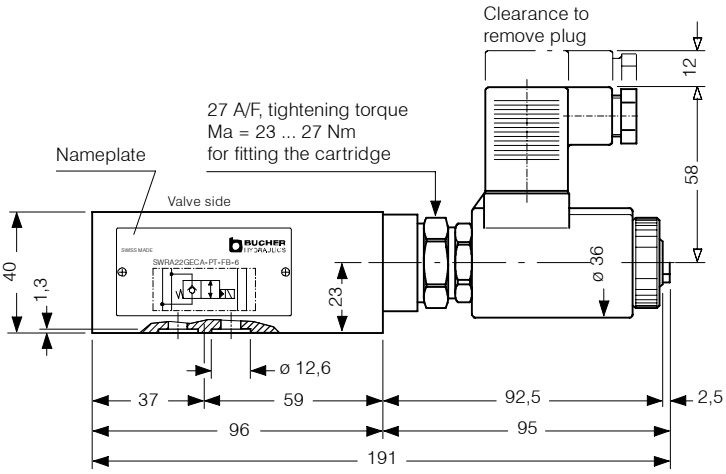

Classification: 430.10.60.13
Reference: 400-P-230130-EN-/09.15

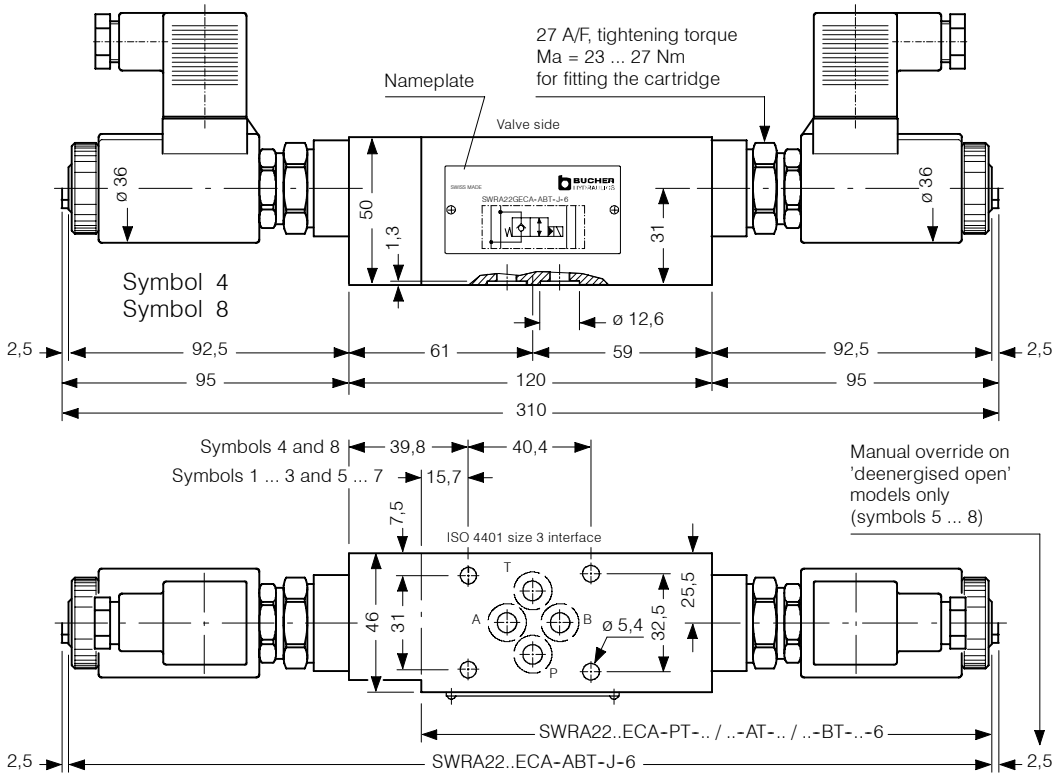

4. Schematic section

showing the relevant ports
Ex. SWR22..ECA-PT-FB-6 ...

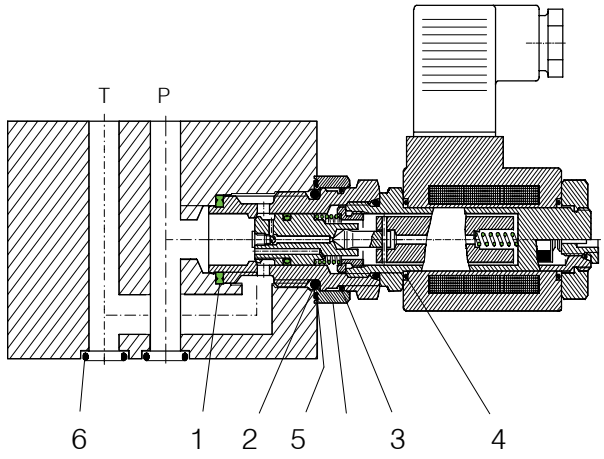

Seal kit no. DS-311, comprising:

Itm.	Qty.	Description	Size
1	1	Seal ring	∅ 22,1 / 16,5 x 2,5
2	1	O-ring no. 117	∅ 20,29 x 2,62 N90
3	1	O-ring no 020	∅ 21,95 x 1,78 N90
4	2	O-ring	∅ 16,00 x 2,00 Viton
5	1	O-ring	∅ 27,00 x 1,50 N75
6	4	O-ring no. 012	∅ 9,25 x 1,78 N90

1 Sealkit for SWRA22..ECA-PT/AT/BT-...-6 ...
2 Sealkits for SWRA22.. ECA-ABT-J-6 ...

5. Installation and servicing

All installation and servicing must be carried out with care, and by qualified personnel only. At installation, make sure that the valve interface aligns with the interface of the mating surface and do not confuse the directional valve ('top') and manifold ('bottom') faces of the valve. When changing seals, the new seals should be thoroughly oiled or greased before they are fitted. When fitting the cartridge, ensure that the seals are oiled or greased and use the specified tightening torque.

6. Ordering code

Ex. S | WRA22GECA - AT - F - 6 _ | 24 VDC

S = stack-mounting valve

WRA22GECA = directional valve, deenergised closed
WRA22OECA = directional valve, deenergised open

PT = function in P ⇒ T
AT = function in A ⇒ T
BT = function in B ⇒ T
T = function in T ⇒ T
ABT = function in A and B ⇒ T

F = stacking body type F (A ⇒ T)
FA = stacking body type FA (B ⇒ T)
FB = stacking body type FB (P ⇒ T)
J = stacking body type J (A ⇒ T + B ⇒ T)

6 = nominal size 6 mm

(blank) = Nitrile seals (standard)
V = Viton seals
Special seals by arrangement

Voltage and current plainly specified

7. Related data sheets

Old no.	New no.	
i - 00	400-P-010101-E	Table of interface equivalents
i - 31	400-P-030501-E	DIN 24 340 size A6 interface
W - 6.160	400-P-131120-E	2/2 Solenoid Cartridge Valve WRA22 ..-10

info.ch@bucherhydraulics.com www.bucherhydraulics.com

© 2015 by Bucher Hydraulics AG Frutigen, CH-3714 Frutigen
All rights reserved.
Data is provided for the purpose of product description only, and must not be construed as warranted characteristics in the legal sense. The information does not relieve users from the duty of conducting their own evaluations and tests. Because the products are subject to continual improvement, we reserve the right to amend the product specifications contained in this catalogue.

BUCHER
hydraulics
WWW.SUMY.IR

2/2 Directional Valve, Size 3

Q_{max} = 60 l/min, p_{max} = 315 bar
solenoid controlled, seated pilot, seated spool main stage
Series SWS22..NDB …-6

- With two-stage, solenoid controlled 2/2-way cartridge valve, series WS22 ...-10
- 'No flow' pilot stage
- Bidirectional seat valve closure
- All ports rated to 315 bar
- Secondary pressure gauge connection M (G 1/4")
- Corrosion protection: stacking body is zinc-phosphated
- With ISO 4401 / CETOP R35H size 3, NFPA D03, DIN 24 340 A6 interface

1 Description

Series SWS22 ...-6 stack valves are two-stage units, the pilot and main stages both being of seated design. They are equipped with the 2/2 solenoid cartridge valve type WS22G...-10 or WS22O...-10. The valve design features screw-in cartridges, thus ensuring straightforward, very user-friendly maintenance. Sealing at the manifold-side ('bottom') interface is by means of O-rings that are fitted in counterbores in the stacking body.

2 Symbols

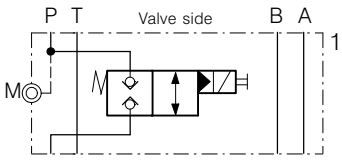

SWS22GNDB-P-E-6 ...

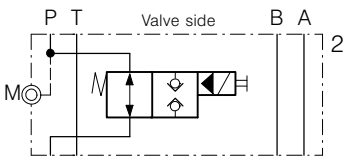

SWS22ONDB-P-E-6 ...

3 Dimensions

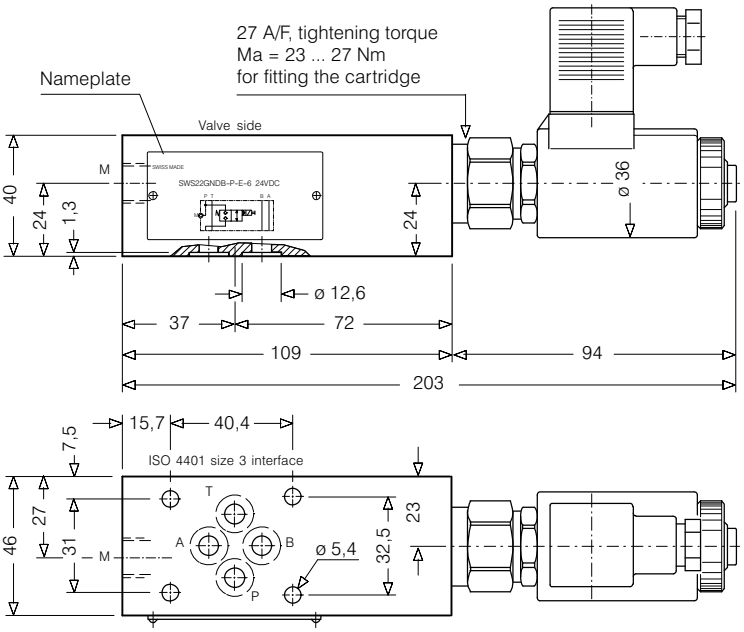

Reference: 400-P-230501-EN-01

4 Schematic section

showing the relevant ports
Ex. SWS22GNDB-P-E-6 ...

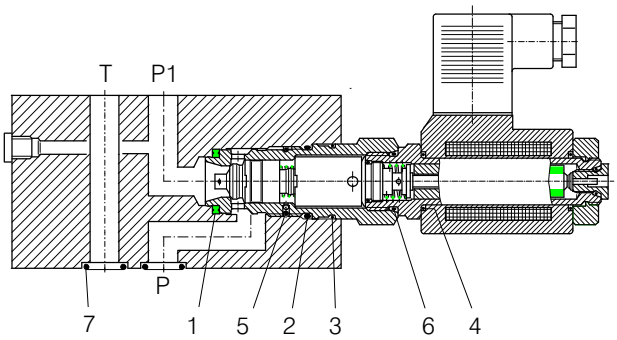

Seal kit no. DS-312, comprising:

Itm.	Qty.	Description	Size
1	1	Seal ring	∅ 22,1 / 16,5 x 2,5
2	1	O-ring	∅ 21,00 x 2,00 N75
3	1	O-ring no. 020	∅ 21,95 x 1,78 N90
4	2	O-ring	∅ 16,00 x 2,00 Viton
5	1	Retaining O-ring	∅ 18,00 x 1,00 N90
6	4	O-ring no. 012	∅ 9,25 x 1,78 N90

5 Installation and maintenance

All installation and maintenance must be carried out with care, and by qualified personnel only. At installation, make sure that the valve interface aligns with the interface of the mating surface and do not confuse the directional valve ('top') and manifold ('bottom') faces of the valve. When changing seals, the new seals should be thoroughly oiled or greased before they are fitted. When fitting the cartridge, ensure that the seals are oiled or greased and use the specified tightening torque.

6 Ordering code

Ex. S | WS22GNDB - P - E - 6 _ | 24 VDC

S = stack-mounting valve
WS22GNDB = directional valve, deenergised closed
WS22ONDB = directional valve, deenergised open
P = function in P
E = stacking body type E
6 = nominal size 6 mm
(blank) = Nitrile seals (standard)
V = Viton seals
Special seals by arrangement
Voltage and current plainly specified

7 Related data sheets

Old no.	New no.	
i - 00	400-P-010101-E	Table of interface equivalents
i - 31	400-P-030501-E	DIN 24 340 size A6 interface
W - 6.150	400-P-131100-E	2/2 Solenoid Cartridge Valve WS22 ...-10
G-40	400-P-805901-E	Seal Plate DB-6

info.ch@bucherhydraulics.com www.bucherhydraulics.com

© 2020 by Bucher Hydraulics AG Frutigen, CH-3714 Frutigen
All rights reserved.
Data is provided for the purpose of product description only, and must not be construed as warranted characteristics in the legal sense. The information does not relieve users from the duty of conducting their own evaluations and tests. Because the products are subject to continual improvement, we reserve the right to amend the product specifications contained in this catalogue.

Classification: 450-..

BUCHER hydraulics
WWW.SUMY.IR

Stacking 2/2 Directional Valve, ISO size 5
Solenoid Controlled, Seated Pilot, Seated Spool Main Stage
Series SWR22..EDA...-10

- 315 bar, 140 l/min
- With two-stage, solenoid controlled 2/2 cartridge valve, type WR22 ...-10
- 'No flow' pilot stage
- All ports rated to 315 bar
- P-line functions have a secondary pressure gauge connection M (G 1/4")
- Corrosion protection: stacking body is zinc-phosphated
- With ISO 4401 / CETOP R35H size 5, NFPA D05, DIN 24 340 A10 interface

1. Symbols

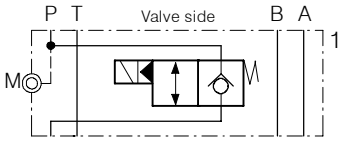

SWR22GEDA-P-E-10 ...

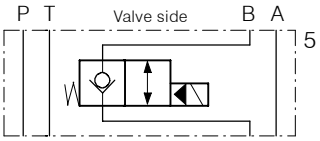

SWR22GEDA-BZ-D-10 ...

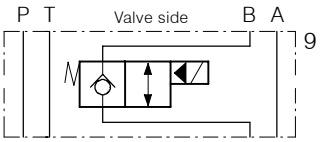

SWR22GEDA-BA-C-10 ...

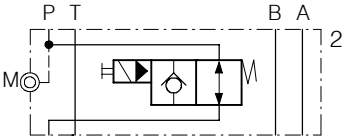

SWR22OEDA-P-E-10 ...

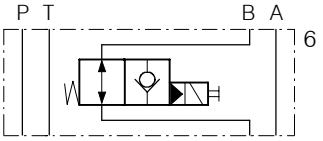

SWR22OEDA-BZ-D-10 ...

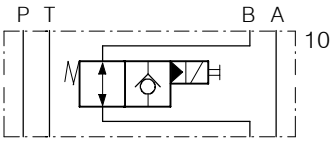

SWR22OEDA-BA-C-10 ...

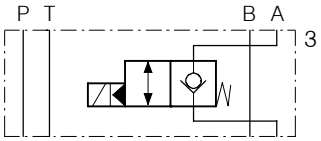

SWR22GEDA-AZ-C-10 ...

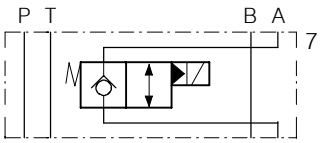

SWR22GEDA-AA-D-10 ...

By turning a valve upside down about its short axis, the 'Check IN' function at A (symbols 3 + 4) becomes the 'Check OUT' function at B (symbols 9 + 10).

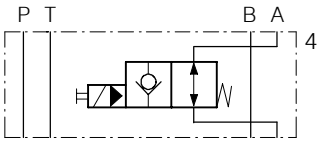

SWR22OEDA-AZ-C-10 ...

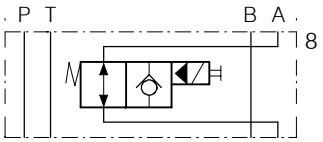

SWR22OEDA-AA-D-10 ...

By turning a valve upside down about its short axis, the 'Check IN' function at B (symbols 5 + 6) becomes the 'Check OUT' function at A (symbols 7 + 8).

2. Dimensions

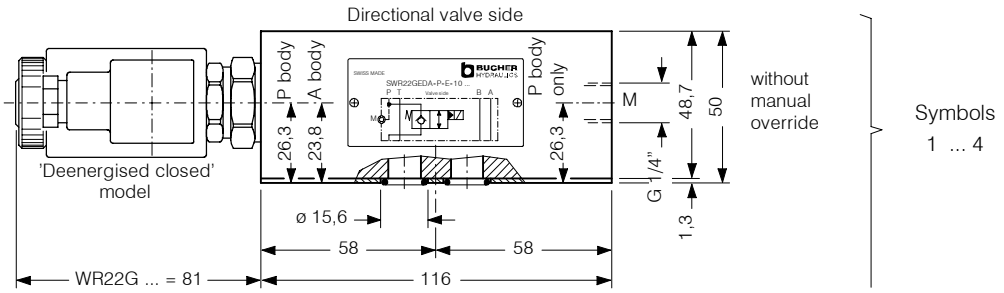

Classification: 430.10.60.12
Reference: 400-P-235120-EN- /09.15

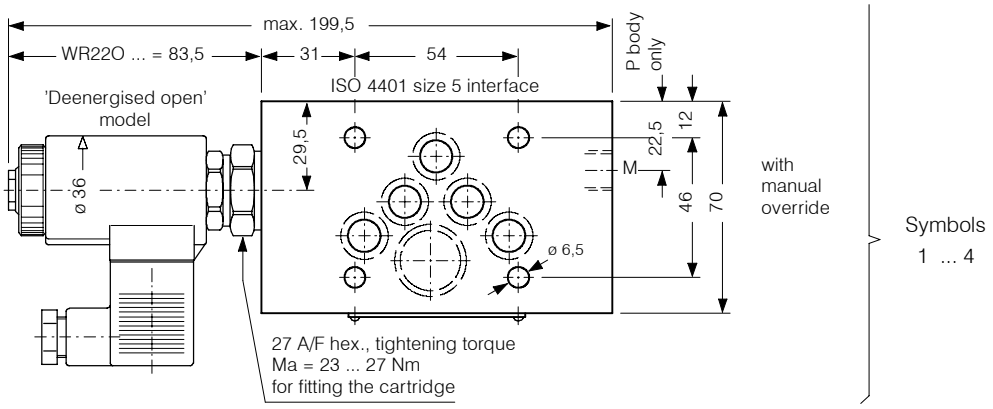
max. 199,5
WR22O ... = 83,5
31
54
ISO 4401 size 5 interface
P body only
'Deenergised open' model
29,5
22,5
12
M
46
70
ø 36
ø 6,5
with manual override
Symbols 1 ... 4
27 A/F hex., tightening torque
Ma = 23 ... 27 Nm
for fitting the cartridge

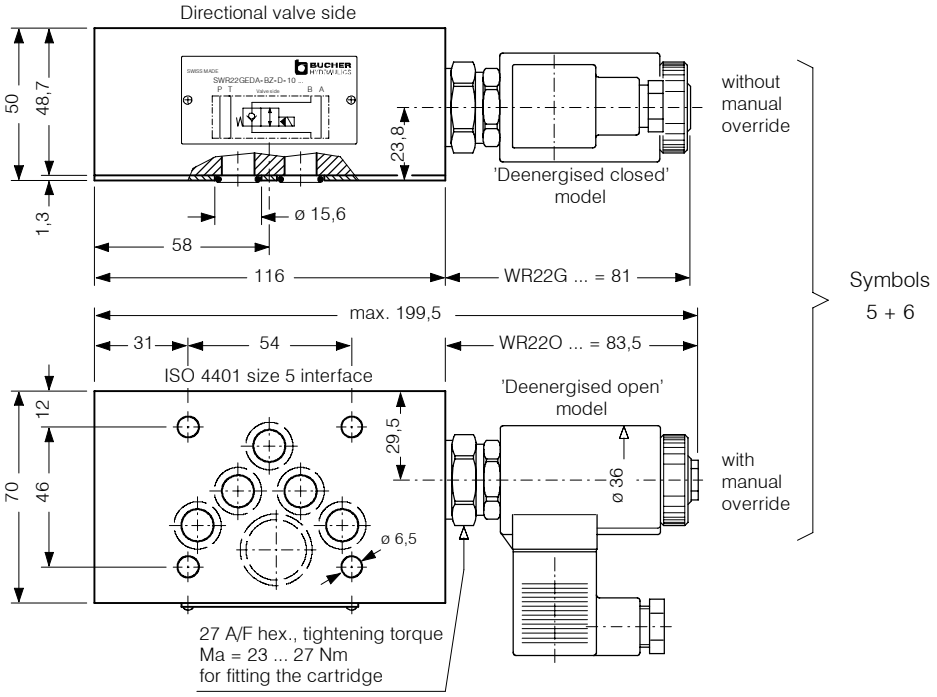
Directional valve side
50
48,7
1,3
23,8
ø 15,6
58
116
WR22G ... = 81
without manual override
'Deenergised closed' model
max. 199,5
31
54
WR22O ... = 83,5
ISO 4401 size 5 interface
'Deenergised open' model
12
70
46
29,5
ø 36
ø 6,5
with manual override
Symbols 5 + 6
27 A/F hex., tightening torque
Ma = 23 ... 27 Nm
for fitting the cartridge

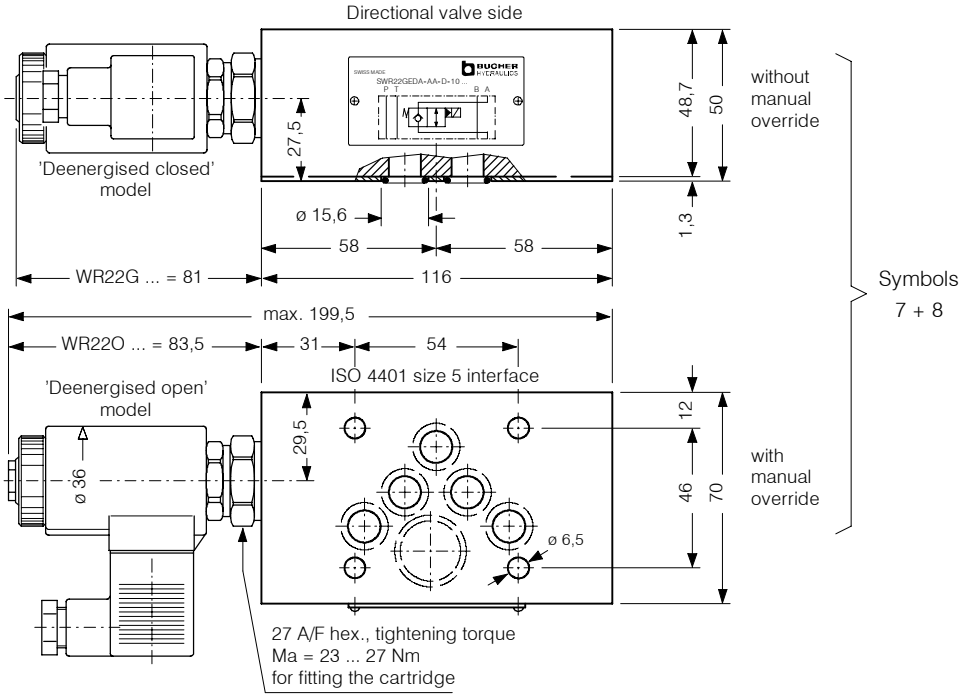
Directional valve side
'Deenergised closed' model
27,5
48,7
50
1,3
ø 15,6
58
58
WR22G ... = 81
116
without manual override
max. 199,5
WR22O ... = 83,5
31
54
ISO 4401 size 5 interface
'Deenergised open' model
29,5
12
46
70
ø 36
ø 6,5
with manual override
Symbols 7 + 8
27 A/F hex., tightening torque
Ma = 23 ... 27 Nm
for fitting the cartridge

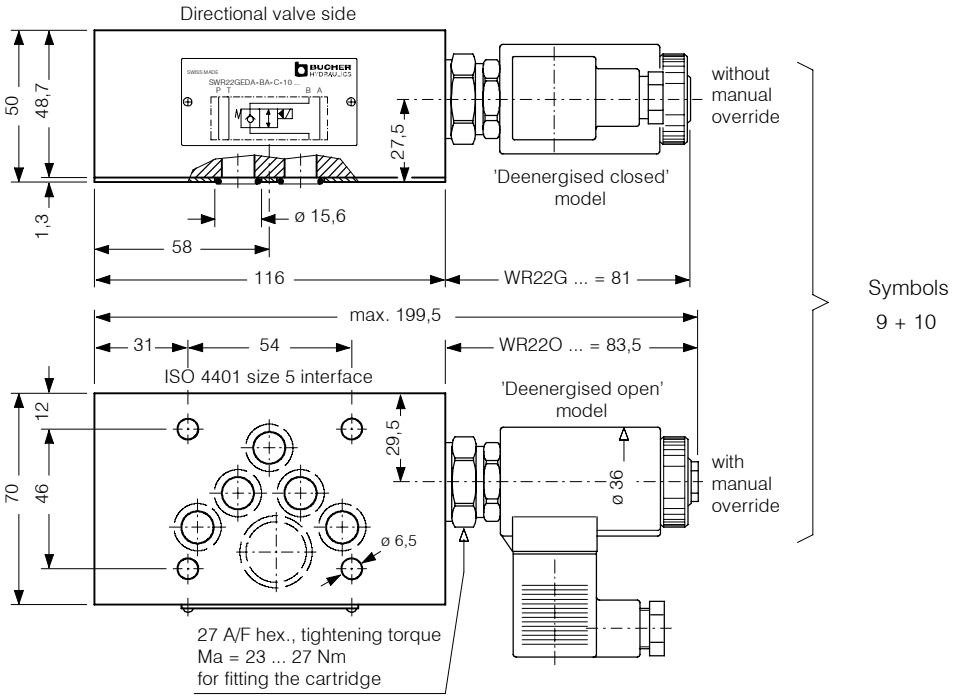

3. Schematic section

showing the relevant ports
Ex. SWR22GEDA-AZ-C-10 ... (Check IN function)

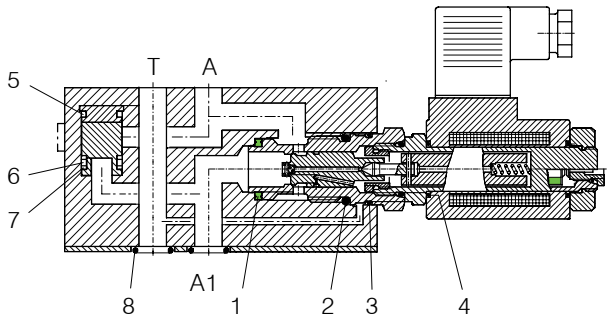

Seal kit no. DS-313, comprising *):

Itm.	Qty.	Qty.	Description	Size
1	1*)	1	Seal ring	∅ 22,1 / 16,5 x 2,5
2	1*)	1	O-ring no. 117	∅ 20,29 x 2,62 N90
3	1*)	1	O-ring no. 020	∅ 21,95 x 1,78 N90
4	2*)	2	O-ring	∅ 16,00 x 2,00 Viton
5	1*)	-	O-ring no. 018	∅ 18,77 x 1,78 N90
6	1*)	-	O-ring no. 016	∅ 15,60 x 1,78 N90
7	2*)	-	Backup ring	∅ 20,0 / 16,9 x 1,4
8	5*)	5	O-ring no. 014	∅ 12,43 x 1,78 N90

SWRA22.. EDA-P-E-10 ...
SWRA22..EDA-AA/BZ-D-10 ... &
SWRA22.. EDA-AZ/BA-C-10 ...

Ex. SWR22GEDA-AA-D-10 ... (Check OUT function)

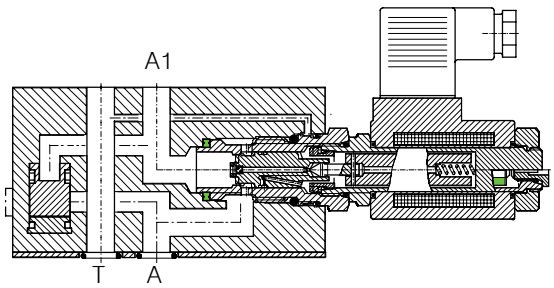

4. Installation and servicing

All installation and servicing must be carried out with care, and by qualified personnel only. At installation, make sure that the valve interface aligns with the interface of the mating surface and do not confuse the directional valve ('top') and manifold ('bottom') faces of the valve. When changing seals, the new seals should be thoroughly oiled or greased before they are fitted. When fitting the cartridge, ensure that the seals are oiled or greased and use the specified tightening torque.

5. Ordering code

Ex. S | WR22GEDA - A | Z - C - 10 | _ 24 VDC

S = stack-mounting valve

WR22GEDA = directional valve, deenergised closed
WR22OEDA = directional valve, deenergised open

P = function in P
A = function in A
B = function in B

A = check OUT function
Z = check IN function

C = stacking body type C (..AZ.. / ..BA..)
D = stacking body type D (..AA.. / ..BZ..)
E = stacking body type E (..P..)

10 = nominal size 10 mm

(blank) = Nitrile seals (standard)
V = Viton seals
Special seals by arrangement

Voltage and current plainly specified

6. Related data sheets

Old no.	New no.	
i - 00	400-P-010101-E	Table of interface equivalents
i - 41	400-P-050101-E	DIN 24 340 size A10 interface
W - 6.155	400-P-131110-E	2/2 Solenoid Cartridge Valve WR22 ...-10
G - 45	400-P-810901-E	Seal Plate DB-10

info.ch@bucherhydraulics.com www.bucherhydraulics.com

© 2015 by Bucher Hydraulics AG Frutigen, CH-3714 Frutigen
All rights reserved.
Data is provided for the purpose of product description only, and must not be construed as warranted characteristics in the legal sense. The information does not relieve users from the duty of conducting their own evaluations and tests. Because the products are subject to continual improvement, we reserve the right to amend the product specifications contained in this catalogue.

BUCHER hydraulics
WWW.SUMY.IR

Stacking 2/2 Directional Valve, ISO size 5
Solenoid Controlled, Seated Pilot, Seated Spool Main Stage
Series SWR22..ECA-AB..-JL-10 ...

- 315 bar, 140 l/min,
- With two-stage, solenoid controlled 2/2 cartridge valve, type WR22 ..-10
- 'No flow' pilot stage
- All ports rated to 315 bar
- Corrosion protection: body zinc-phosphated, exposed cartridge parts zinc-plated
- With ISO 4401 / CETOP R35H size 5, NFPA D05, DIN 24 340 A10 interface

1. Symbols

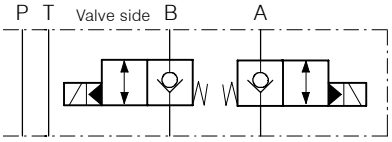

SWR22GECA-ABZ-JL-10 ...

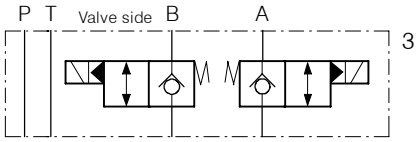

SWR22GECA-ABA-JL-10 ...

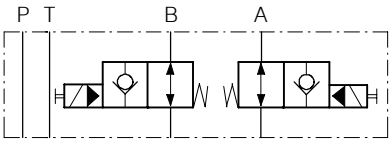

SWR22OECA-ABZ-JL-10 ...

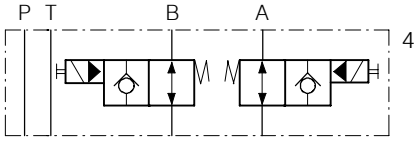

SWR22OECA-ABA-JL-10 ...

By turning a valve upside down about its short axis, 'Check IN' functions (symbols 1 and 2) become 'Check OUT' functions (symbols 3 and 4)

2. Dimensions

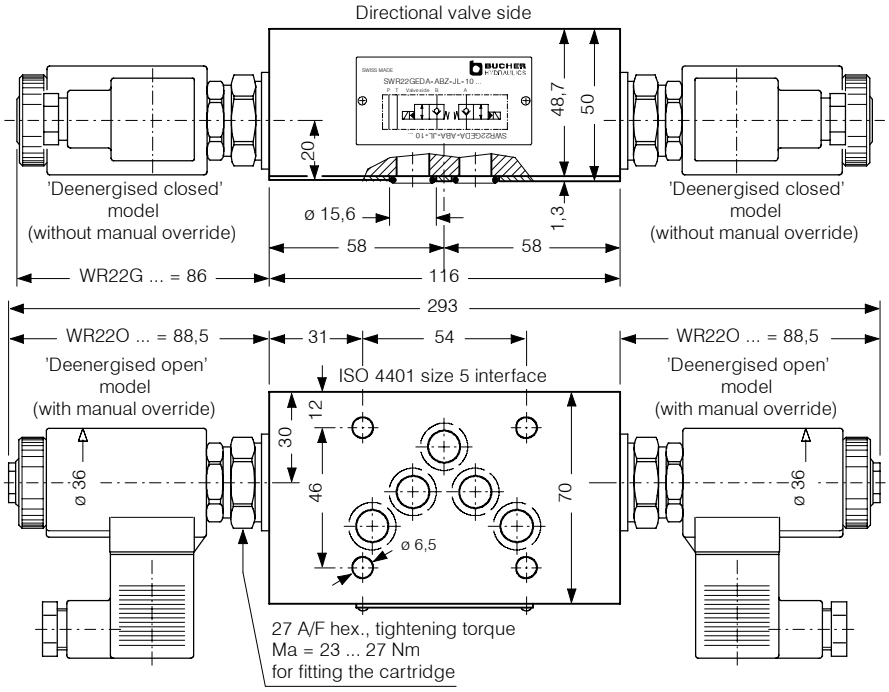

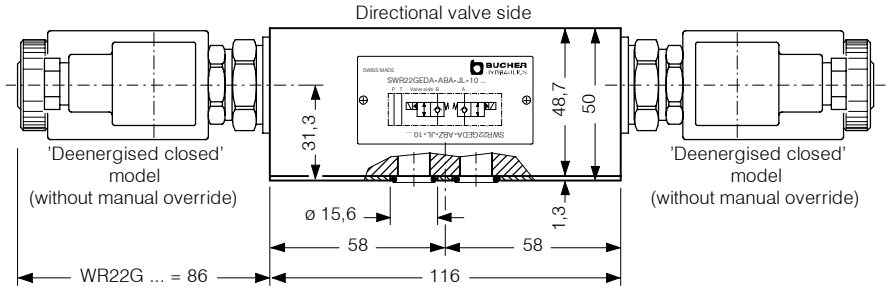

Classification: 430.10.60.12
Reference: 400-P-235125-EN-/09.15

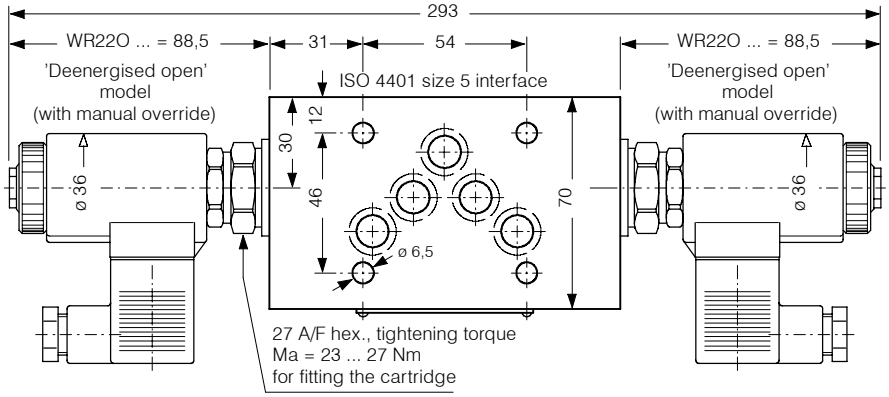

3. Schematic section

showing the relevant ports
Ex. SWR22GECA-ABZ-JL-10 ...
(Check IN function)

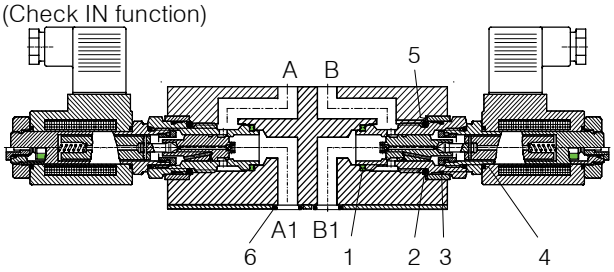

Seal kit no. DS-314, comprising:

Itm.	Qty.	Description	Size
1	2	Seal ring	∅ 22,1 / 16,5 x 2,5
2	2	O-ring no. 117	∅ 20,29 x 2,62 N90
3	2	O-ring no. 020	∅ 21,95 x 1,78 N90
4	4	O-ring	∅ 16,00 x 2,00 Viton
5	2	O-ring	∅ 27,00 x 1,5 N75
6	5	O-ring no. 014	∅ 12,43 x 1,78 N90

4. Installation and servicing

All installation and servicing must be carried out with care, and by qualified personnel only. At installation, make sure that the valve interface aligns with the interface of the mating surface and do not confuse the directional valve ('top') and manifold ('bottom') faces of the valve. When changing seals, the new seals should be thoroughly oiled or greased before they are fitted. When fitting the cartridge, ensure that the seals are oiled or greased and use the specified tightening torque.

5. Ordering code

Ex. S | WR22GECA - AB | Z - JL - 10 | _ | 24 VDC

S = stack-mounting valve
WR22GECA = directional valve, deenergised closed
WR22OECA = directional valve, deenergised open
AB = function in A and B
A = check OUT function
Z = check IN function
JL = stacking body type JL
10 = nominal size 10 mm
(blank) = Nitrile seals (standard)
V = Viton seals
Special seals by arrangement
Voltage and current plainly specified

6. Related data sheets

Old no.	New no.	
i - 00	400-P-010101-E	Table of interface equivalents
i - 41	400-P-050101-E	DIN 24 340 size A10 interface
W - 6.155	400-P-131110-E	2/2 Solenoid Cartridge Valve WR22 ...-10
G - 45	400-P-810901-E	Seal Plate DB-10

info.ch@bucherhydraulics.com www.bucherhydraulics.com

© 2015 by Bucher Hydraulics AG Frutigen, CH-3714 Frutigen
All rights reserved.
Data is provided for the purpose of product description only, and must not be construed as warranted characteristics in the legal sense. The information does not relieve users from the duty of conducting their own evaluations and tests. Because the products are subject to continual improvement, we reserve the right to amend the product specifications contained in this catalogue.

BUCHER hydraulics

WWW.SUMY.IR

Stacking 2/2 Directional Valve, ISO size 5
Solenoid Controlled, Seated Design
Series SWRA22..ECA ...-10

- 315 bar, 140 l/min
- With two-stage, solenoid controlled 2/2 cartridge valve, type WRA22 ..-10
- 'No flow' pilot stage
- All ports rated to 315 bar
- Corrosion protection: body zinc-phosphated, exposed cartridge parts zinc-plated
- With ISO 4401 / CETOP R35H size 5, NFPA D05, DIN 24 340 A10 interface

1. Description

Series SWRA22 ...-10 stack valves are two-stage units, the pilot and main stages both being of seated design. They are equipped with the 2/2 solenoid cartridge valve type WRA22G...-10 or WRA22O...-10. The valve design features screw-in cartridges, thus ensuring straightforward, very user-friendly maintenance. On the ..PT.., ..AT.. and ..BT.. models, sealing at the manifold-side ('bottom') interface is by means of a seal plate with 5 O-rings. On the ..ABT.. model it is by means of O-rings that are fitted in counterbores in the stacking body (no seal plate).

2. Symbols

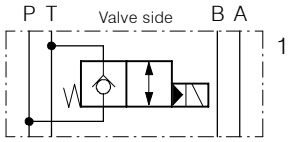

SWRA22GECA-PT-FB-10

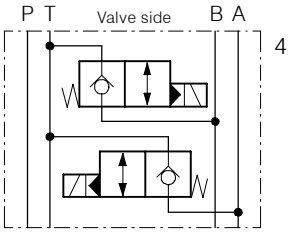

SWRA22GECA-ABT-J-10

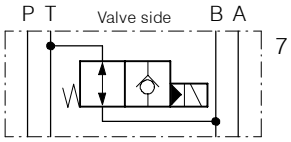

SWRA22OECA-BT-F-10

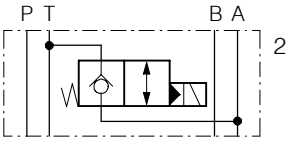

SWRA22GECA-AT-F-10

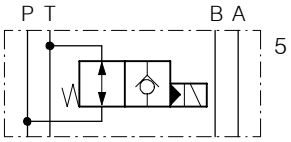

SWRA22OECA-PT-FB-10

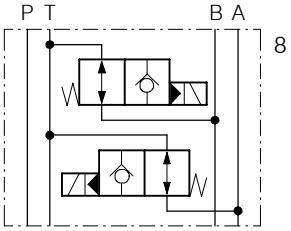

SWRA22OECA-ABT-J-10

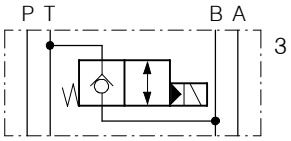

SWRA22GECA-BT-F-10

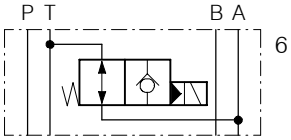

SWRA22OECA-AT-F-10

3. Dimensions

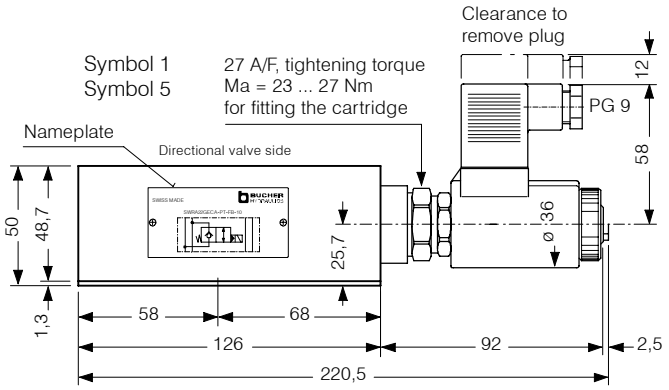

Classification: 430.10.60.13

Reference: 400-P-235130-EN- /09.15

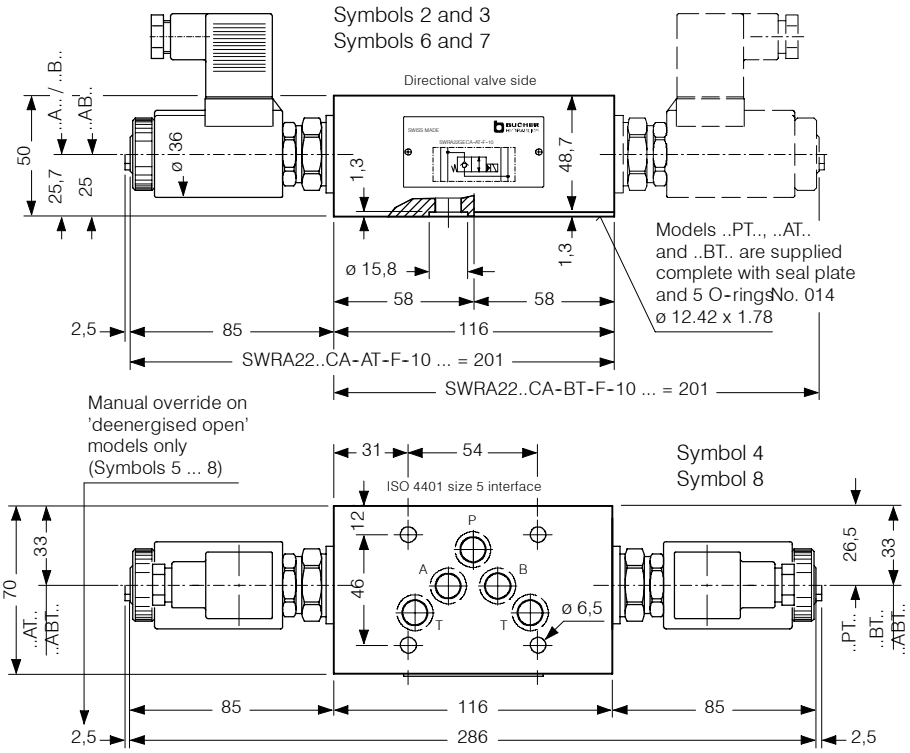

4. Schematic section

showing the relevant ports
Ex. SWRA22..ECA-PT-FB-10 ...

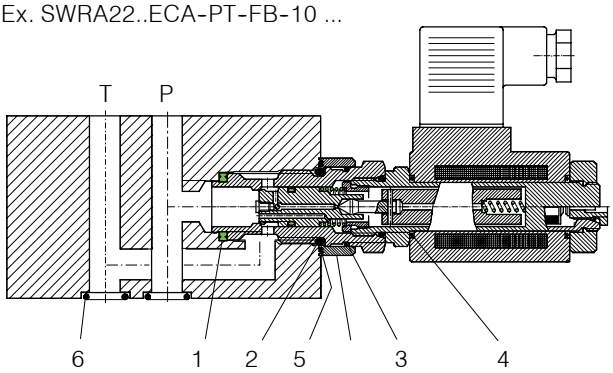

Seal kit no. DS-315, comprising:

Itm.	Qty.	Description	Size
1	1	Seal ring	∅ 22,1 / 16,5 x 2,5
2	1	O-ring no. 117	∅ 20,29 x 2,62 N90
3	1	O-ring no 020	∅ 21,95 x 1,78 N90
4	2	O-ring	∅ 16,00 x 2,00 Viton
5	1	O-ring	∅ 27,00 x 1,50 N75
6	5	O-ring no. 014	∅ 12,43 x 1,78 N90

1 Sealkit for SWRA22...ECA-PT/AT/BT-....

2 Sealkits for SWRA22...ECA-ABT-J-10...

5. Installation and servicing

All installation and servicing must be carried out with care, and by qualified personnel only. At installation, make sure that the valve interface aligns with the interface of the mating surface and do not confuse the directional valve ('top') and manifold ('bottom') faces of the valve. When changing seals, the new seals should be thoroughly oiled or greased before they are fitted. When fitting the cartridge, ensure that the seals are oiled or greased and use the specified tightening torque.

6. Ordering code

Ex. S | WRA22GECA - AT - F - 10 _ | 24 VDC

S = stack-mounting valve

WRA22G..CA = directional valve, deenergised closed
WRA22O..CA = directional valve, deenergised open

PT = function in P ⇒ T
AT = function in A ⇒ T
BT = function in B ⇒ T
ABT = function in A and B ⇒ T

F = stacking body type F (A ⇒ T / B ⇒ T)
FB = stacking body type FB (P ⇒ T)
J = stacking body type J (A + B ⇒ T)

10 = nominal size 10 mm

(blank) = Nitrile seals (standard)
V = Viton seals
Special seals by arrangement

Voltage and current plainly specified

7. Related data sheets

Old no.	New no.	
i - 00	400-P-010101-E	Table of interface equivalents
i - 41	400-P-050101-E	DIN 24 340 size A10 interface
W - 6.160	400-P-131120-E	2/2 Solenoid Cartridge Valve WRA22 ..-10
G - 45	400-P-810901-E	Seal Plate DB-10

info.ch@bucherhydraulics.com www.bucherhydraulics.com

© 2015 by Bucher Hydraulics AG Frutigen, CH-3714 Frutigen
All rights reserved.
Data is provided for the purpose of product description only, and must not be construed as warranted characteristics in the legal sense. The information does not relieve users from the duty of conducting their own evaluations and tests. Because the products are subject to continual improvement, we reserve the right to amend the product specifications contained in this catalogue.

BUCHER hydraulics

WWW.SUMY.IR

Stacking 2/2 Directional Valve, ISO size 5
Solenoid Controlled, Seated Pilot, Seated Spool Main Stage
Series SWS22..NDA ...-10

- 315 bar, 140 l/min
- With two-stage, solenoid controlled 2/2 cartridge valve, type WS22 ...-10
- 'No flow' pilot stage
- Bidirectional seat valve closure
- All ports rated to 315 bar
- Secondary pressure gauge connection M (G 1/4")
- Corrosion protection: stacking body is zinc-phosphated
- With ISO 4401 / CETOP R35H size 5, NFPA D05, DIN 24 340 A10 interface

1. Description

Series SWS22 ...-10 stack valves are two-stage units, the pilot and main stages both being of seated design. They are equipped with the 2/2 solenoid cartridge valve type WS22G...-10 or WS22O...-10. The valve design features screw-in cartridges, thus ensuring straightforward, very user-friendly maintenance. Sealing at the manifold-side ('bottom') interface is by means of O-rings that are fitted in counterbores in the stacking body.

2. Symbols

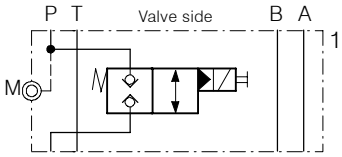

SWS22GNDA-P-E-10 ...

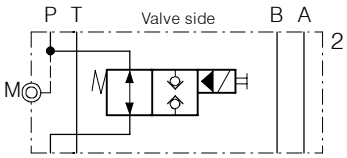

SWS22ONDA-P-E-10 ...

3. Dimensions

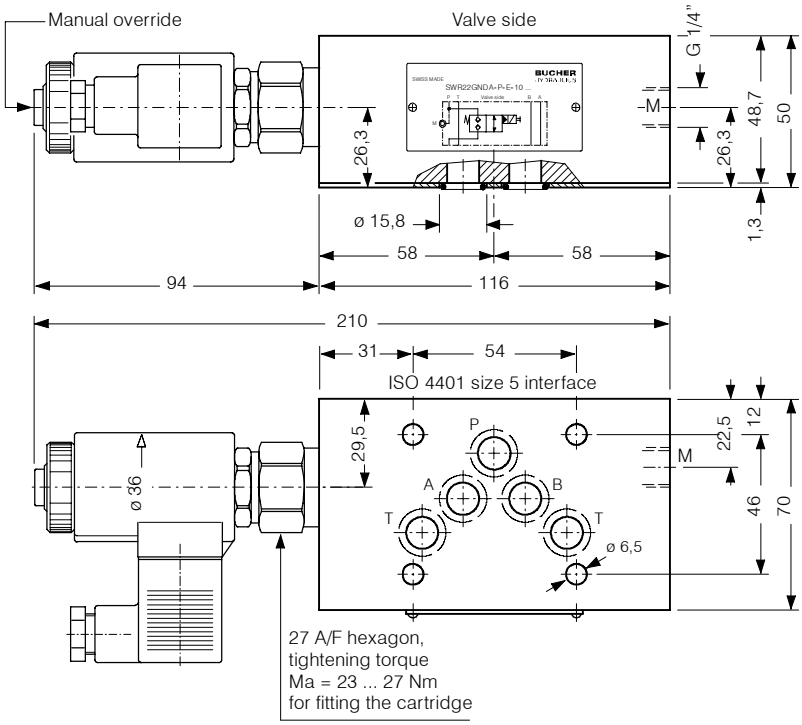

Classification: 430.10.60.10
Reference: 400-P-235510-EN-/09.2015

WWW.SUMY.IR

4. Schematic section

showing the relevant ports
Ex. SWS22GNDA-P-E-10 ...

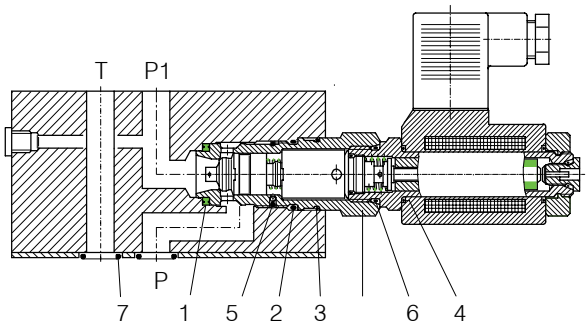

Seal kit no. DS-316, comprising:

Itm.	Qty.	Description	Size
1	1	Seal ring	∅ 22,1 / 16,5 x 2,5
2	1	O-ring	∅ 21,00 x 2,00 N75
3	1	O-ring no. 020	∅ 21,95 x 1,78 N90
4	2	O-ring	∅ 16,00 x 2,00 Viton
5	1	Retaining O-ring	∅ 18,00 x 1,00 N90
6	1	O-ring no. 017	∅ 17,17 x 1,78 N90
7	5	O-ring no. 014	∅ 12,43 x 1,78 N90

5. Installation and servicing

All installation and servicing must be carried out with care, and by qualified personnel only. At installation, make sure that the valve interface aligns with the interface of the mating surface and do not confuse the directional valve ('top') and manifold ('bottom') faces of the valve. When changing seals, the new seals should be thoroughly oiled or greased before they are fitted. When fitting the cartridge, ensure that the seals are oiled or greased and use the specified tightening torque.

6. Ordering code

Ex. S | WS22GNDA - P - E - 10 _ | 24 VDC

S = stack-mounting valve
WS22GNDA = directional valve, deenergised closed
WS22ONDA = directional valve, deenergised open
P = function in P
E = stacking body type E
10 = nominal size 10 mm
(blank) = Nitrile seals (standard)
V = Viton seals
Special seals by arrangement
Voltage and current plainly specified

7. Related data sheets

Old no.	New no.	
i - 00	400-P-010101-E	Table of interface equivalents
i - 41	400-P-050101-E	DIN 24 340 size A10 interface
W - 6.150	400-P-131100-E	2/2 Solenoid Cartridge Valve WS22 ...-10
G - 45	400-P-810901-E	Seal Plate DB-10

BUCHER HYDRAULICS www.bucherhydraulics.com

Germany
Phone +49 7742 85 20
Fax +49 7742 71 16
info.de@bucherhydraulics.com

France
Phone +33 389 64 22 44
Fax +33 389 65 28 78
info.fr@bucherhydraulics.com

Netherlands
Phone +31 79 34 26 24 4
Fax +31 79 34 26 28 8
info.nl@bucherhydraulics.com

UK
Phone +44 24 76 35 35 61
Fax +44 24 76 35 35 72
info.uk@bucherhydraulics.com

USA
Phone +1 262 605 82 80
Fax +1 262 605 82 78
info.wi@bucherhydraulics.com

Switzerland
Phone +41 33 67 26 11 1
Fax +41 33 67 26 10 3
info.ch@bucherhydraulics.com

Italy
Phone +39 0522 92 84 11
Fax +39 0522 51 32 11
info.it@bucherhydraulics.com

Austria
Phone +43 6216 44 97
Fax +43 6216 44 97 4

China
Phone +86 10 64 44 32 88
Fax +86 10 64 44 32 35
info.bj@bucherhydraulics.com

Product Center (Elevator)
Phone +41 41 757 03 33
Fax +41 41 757 16 49
info.nh@bucherhydraulics.com

We reserve the right of modification without notice.

2/2 Solenoid Operated Seat Valve, ISO Size 05

Q_{max} = 140 l/min, p_{max} = 350 bar
Sandwich design, bidirectional seat-valve shut-off, electrically operated, two stage
Series SWS22…NCB-…-10…

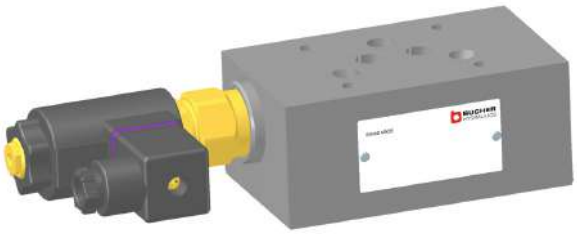

- With cartridge valve, type WS22G / O…-10…
- Interface to ISO 4401-05-04
- With bidirectional seat-valve shut-off
- Inline models in A, B or A and B
- De-energized open or closed
- The slip-on coil can be rotated, and it can be replaced without opening the hydraulic envelope
- Various plug-connector systems and voltages are available
- External cartridge parts are zinc plated and chromited (CrVI-free)

1 Description

Series SWS22…NCB-…-10… sandwich valves are high performance, 2/2 solenoid operated seat valves with a size 05 interface to ISO 4401-05-04. The main components of the valves are a sandwich body (stack-mounting body) and the screw-in cartridge (type WS22G / O…-10…). The 2/2 solenoid operated cartridge seat valve is designed on the poppet/seat principle, and is therefore virtually leak-free in both directions of flow (bidirectional seat-valve shut-off). These sandwich valves can be supplied as de-energized-closed or de-energized-open models, as inline in A, B or A and B functions. These 2/2 solenoid operated seat valves are predominantly used in certain mobile and industrial applications where leak-tight shut-off functions are crucially important. Examples are where loads, tensions, or clamping forces must be held without leakage. All external parts of the cartridge are zinc-nickel plated according to DIN EN ISO 19 598 and are thus suitable for use in the harshest operating environments. The slip-on coils can be replaced without opening the hydraulic envelope and can be positioned at any angle through 360°. The sandwich body is sealed at its manifold side (the connections side) by means of O-rings fitted in a seal plate that is supplied with the valve.

2 Technical data

General characteristics	Description, value, unit
Designation	2/2 solenoid operated seat valve
Design	sandwich design, bidirectional seat-valve shut-off, electrically operated, two stage
Mounting method	4 x ∅ 6.5 holes for M6 cap screws
Size	size 05 interface to ISO 4401-05-04 / DIN 24 340 A10
Weight	3.25 … 3.85 kg
Mounting attitude	unrestricted
Ambient temperature range	-25 °C … +50 °C
Surface corrosion protection	without

Hydraulic characteristics	Description, value, unit
Maximum operating pressure	350 bar
Maximum flow rate	140 l/min
Flow direction	see symbol
Hydraulic fluid	HL and HLP mineral oil to DIN 51 524; for other fluids, please contact BUCHER
Hydraulic fluid temperature range	-25 °C … +80 °C

Hydraulic characteristics	Description, value, unit
Viscosity range	10…500 mm^2/s (cSt), recommended 15...250 mm^2/s (cSt)
Minimum fluid cleanliness Cleanliness class to ISO 4406 : 1999	class 20/18/15

Electrical characteristics	Description, value, unit
Supply voltage	12 V DC, 24 V DC 115 V AC, 230 V AC (50 … 60 Hz)
Supply voltage tolerance	± 10 %
Nominal power consumption	V DC = 27 W V AC = 25 W
Relative duty cycle	100 %
Protection class to ISO 20 653 / EN 60 529	IP 65 / IP 67 / IP 69K, see “Ordering code” (with appropriate mating connector and proper fitting and sealing)
Electrical connection	DIN EN 175301-803, 3-pin 2 P+E (standard) for other connectors, see “Ordering code”

3 Symbol

Function in A, B or A and B – de-energized closed (inline model)

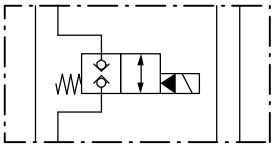

SWS22GNCB-A-JL-10…

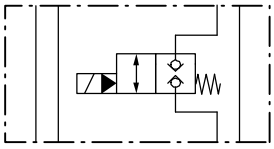

SWS22GNCB-B-JL-10…

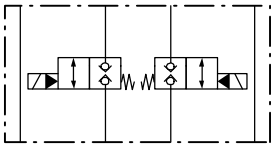

SWS22GNCB-AB-JL-10…

Function in A, B or A and B – de-energized open (inline model)

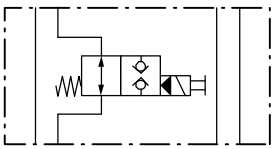

SWS22ONCB-A-JL-10…

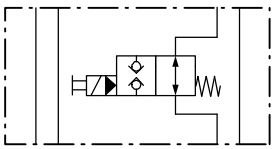

SWS22ONCB-B-JL-10…

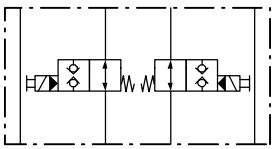

SWS22ONCB-AB-JL-10…

4 Performance graphs

IMPORTANT!
Detailed performance figures and other hydraulic characteristics can be found in the data sheet for the 2/2 solenoid operated cartridge valve that is fitted (Ref. No. 400-P-131101-E).

ATTENTION!
The performance figures in the data sheet for the cartridge valve refer just to the cartridge itself. Take into account the additional pressure drop in the body into which it is fitted.

5 Dimensions & sectional view

5.1 Solenoid operated seat valve, function in A and B (inline model)

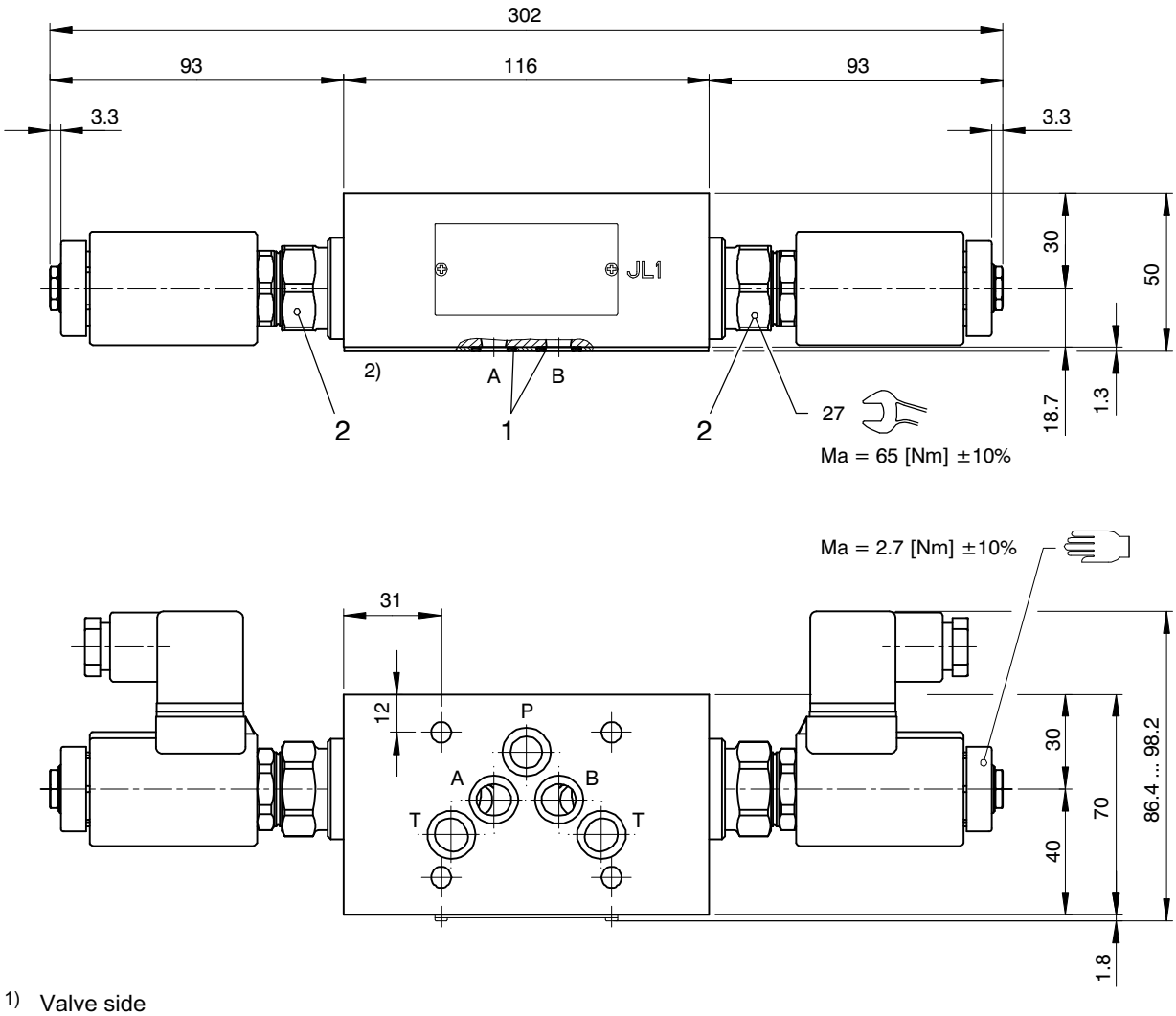

1) Valve side
2) Connections side (manifold side)

5.2 Solenoid operated seat valve, function in A or B (inline model)

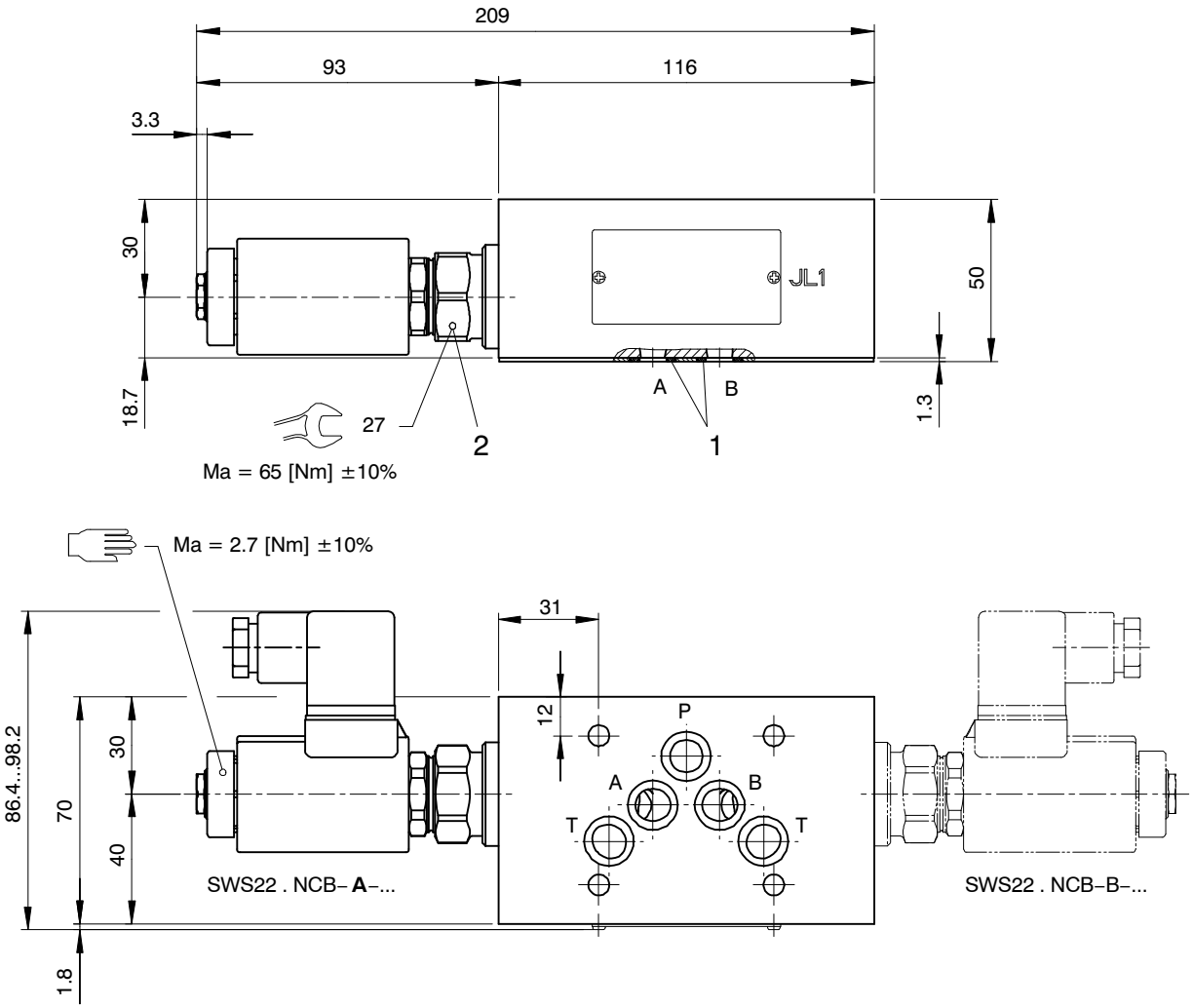

1) Valve side

2) Connections side (manifold side)

6 Installation information

IMPORTANT!
When installing the valve, make sure that the mating face (the manifold interface) aligns with the valve interface. Do not confuse the sandwich valve's manifold side and directional-valve side. No adjustments are necessary, since the cartridges are set in the factory.

ATTENTION!
Only qualified personnel with mechanical skills may carry out any maintenance work. Generally, the only work that should ever be undertaken is to check, and possibly replace, the seals. When changing seals, oil or grease the new seals thoroughly before fitting them.

NBR seal kit no. DS-316-N [3)]

Item	Qty.	Description
1	5	O-ring no. 014 ∅ 12,42 x 1,78 N90
2	2	NBR seal kit no. DS-281-N for 2/2 cartridge seat valve, type WS22G…/ WS22O...-10

IMPORTANT!

3) Seal kit with FKM (Viton) seals, no. DS-316-V

7 Ordering code

Ex. S W S 22G N C B - A - JL - 10 _ 24 VDC _

S	=	sandwich design
W	=	directional valve
S	=	seat-valve design (bidirectional shut-off)
22G	=	2/2 function, de-energized closed
22O	=	2/2 function, de-energized open
N	=	solenoid operated, V DC = 27 W / V AC = 25 W
C	=	cavity type DC
A ... Q	=	standard model - see relevant data sheets
Z ... R	=	special features - please consult BUCHER
A	=	function in A
B	=	function in B
AB	=	function in A and B
JL	=	plate type JL
10	=	ISO size 05 interface
(blank)	=	NBR (Nitrile) seals (**standard**)
V	=	FKM (Viton) seals (special seals - please contact BUCHER)
...	=	voltage e.g. **24** (24 V)
(blank)	=	DIN EN 175301-803 connection with mating plug (**standard, IP 65**)
M100	=	DIN EN 175301-803 connection without mating plug
C	=	Kostal plug connection (IP 65)
JT	=	Junior Timer radial plug connection (with protection diode, IP65)
IT	=	Junior Timer axial plug connection (with protection diode, IP65)
D	=	Deutsch plug connection 45° DT04-2P (IP67/69K)
DT	=	Deutsch plug connection 45° DT04-2P (with protection diode, IP67/69K)
S	=	AMP Superseal 1.5 (IP67) / Metri-Pack 150 (IP65) plug connection
F	=	flying leads (500 mm)

mating plug not supplied

8 Related data sheets

Reference	(Old no.)	Description
400-P-050101	(i-41)	Size 05 interface to ISO 4401-05-04
400-P-120110	(W-2.141)	Coils for screw-in cartridge valves
400-P-131101		2/2 cartridge seat valve, size 10, series WS22G…/ WS22O…

info.ch@bucherhydraulics.com www.bucherhydraulics.com

© 2021 by Bucher Hydraulics AG Frutigen, CH-3714 Frutigen
All rights reserved.
Data is provided for the purpose of product description only, and must not be construed as warranted characteristics in the legal sense. The information does not relieve users from the duty of conducting their own evaluations and tests. Because the products are subject to continual improvement, we reserve the right to amend the product specifications contained in this catalogue.

Classification: 430.300. - .330.320.300

BUCHER hydraulics

WWW.SUMY.IR

NEEDLE VALVE BI–DIRECTIONAL, POSITIVE SHUT–OFF

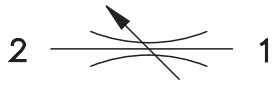

TORQUE:
Steel = 35/40 Ft–Lb. [47/54 Nm]
Aluminum = 25/30 Ft–Lb. [34/41 Nm]

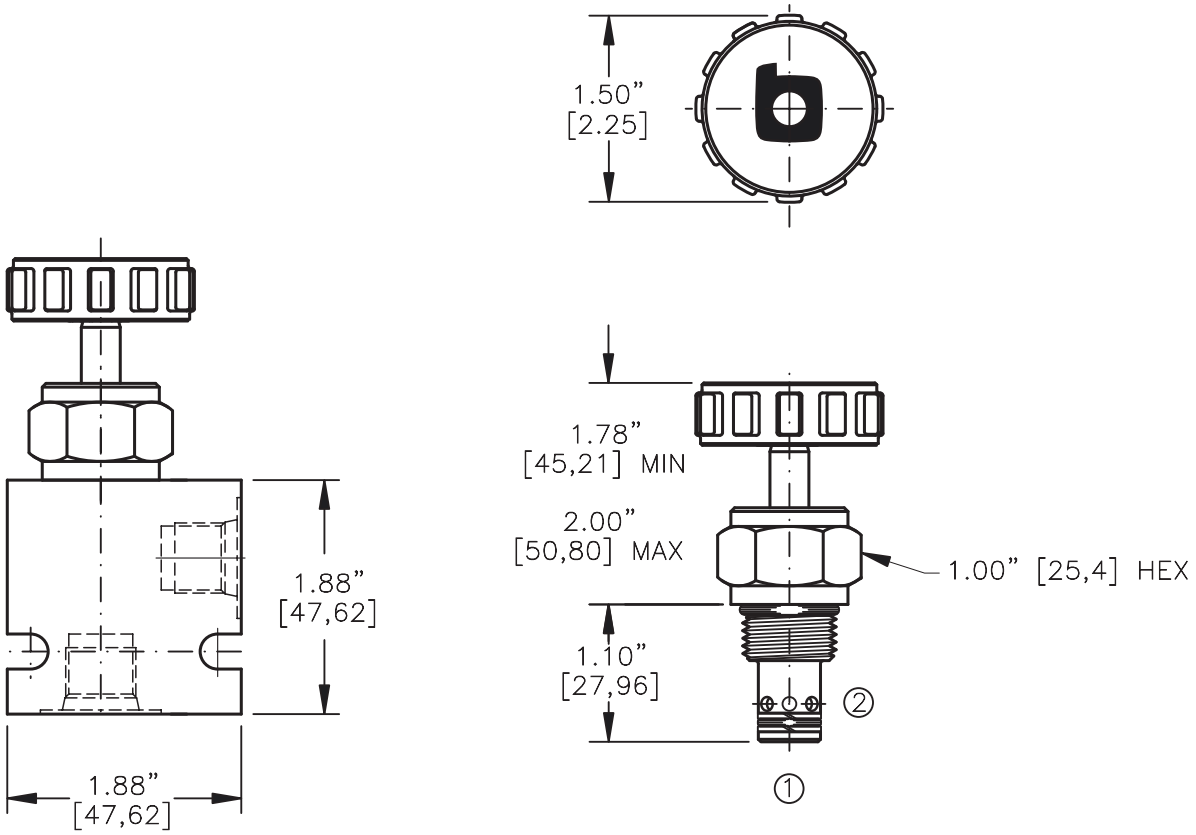

FOR ALUMINUM OR STEEL VALVE HOUSING CONFIGURATIONS SEE PAGE 0–011.1

NFCV–08–X–X–X

BASIC

SIZE
08 = 3/4"–16 UNF

SEALS
N = BUNA "N"
V = VITON

ADJUSTMENT
K = HANDKNOB
H = METAL HANDKNOB
O = NO KNOB

FOR ADJUSTMENT CONTROL OPTIONS SEE PAGE 0–050.0

PORTS
0 = CARTRIDGE ONLY
02BX = G 1/4" BSPP
06TX = SAE – #6
"A" – ALUM. HOUSING
"S" – STEEL HOUSING

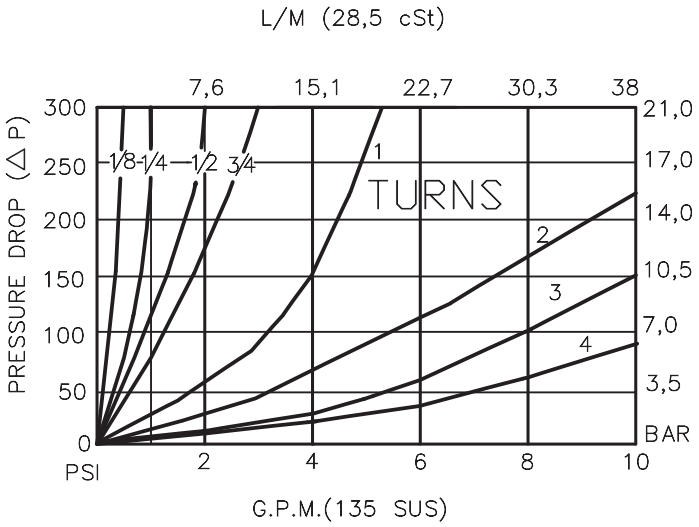

BUCHER hydraulics

WWW.SUMY.IR

NEEDLE VALVE BI-DIRECTIONAL, POSITIVE SHUT-OFF

DESCRIPTION

This unit is a SCREW IN, cartridge type, non-compensated, adjustable, bi-directional needle flow control valve.

OPERATIONS

This valve increases its orifice value from fully closed to fully open in 4 1/2 turns with counterclockwise rotation.
Positive shut-off.

FEATURES AND BENEFITS

Fine and low effort leakproof adjustment.
Effective adjustment is linear to 4 1/2 turns.
All external carbon steel parts are plated for longer life against the elements.
All cartridge valves are 100% functionally tested.
Industry common cavity.

SPECIFICATIONS

OPERATING PRESSURE: 5,000 PSI [350 Bar]
PROOF PRESSURE: 10,000 PSI [700 Bar]
FLOW:10.0 GPM [38 l/m] nominal. See performance chart.
INTERNAL LEAKAGE: ZERO drops per minute maximum @ 5,000 PSI (350 Bar)
VALVE HOUSINGS: 2500 PSI [175 Bar] = Aluminum - Anodized.
5000 PSI [350 Bar] = Steel - Unplated.
OPERATING TEMPERATURE: -40° to +250° F. [-40° to +120° C.]
OPERATING MEDIA: All general purpose hydraulic fluids such as MIL-H-5606, SAE-#10, SAE-#20, etc.
INSTALLATION: No restrictions.
SEAL KIT: SKN-0822 Buna "N".
SKV-0822 Viton.
WEIGHT: .22 lb [.10 kg] cartridge only.
VALVE CAVITY: #C0820, See Page 0-011.0.

info.el@bucherhydraulics.com www.bucherhydraulics.com/commoncavity

© 2015 by Bucher Hydraulics, Inc., 2545 Northwest Parkway, Elgin, Illinois 60124, USA
All rights reserved.
Data is provided for the purpose of product description only, and must not be construed as warranted characteristics in the legal sense. The information does not relieve users from the duty of conducting their own evaluations and tests. Because the products are subject to continual improvement, we reserve the right to amend the product specifications contained in this catalogue.

Alternative product: FCVL-10-... (520-P-020220)

BUCHER hydraulics

NEEDLE VALVE BI-DIRECTIONAL, POSITIVE SHUT-OFF.

WWW.SUMY.IR

2 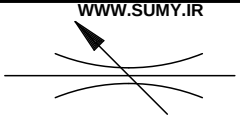 1

TORQUE:
Steel = 55/60 Ft-Lb. [74/81 Nm]
Aluminum = 35/40 Ft-Lb. [47/54 Nm]

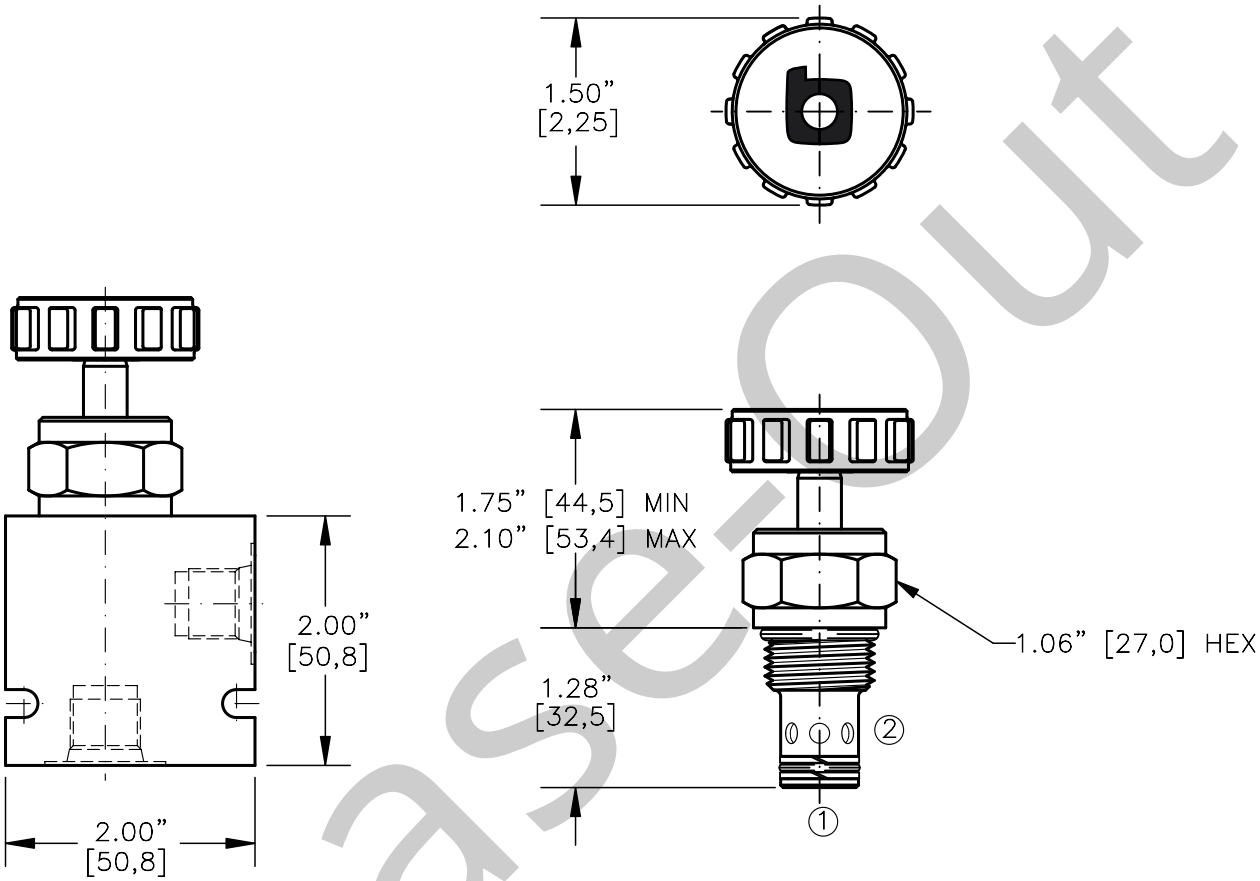

FOR ALUMINUM OR STEEL VALVE HOUSING CONFIGURATIONS SEE PAGE 0-012.1

NFCV-10-X-X-X

BASIC

SIZE
10 = 7/8"-14 UNF

SEALS
N = BUNA "N"
V = VITON

ADJUSTMENT
K = HANDKNOB
H = METAL HANDKNOB
O = NO KNOB

FOR ADJUSTMENT CONTROL OPTIONS SEE PAGE 0-050.0

PORTS
0 = CARTRIDGE ONLY
02BX = G 1/4" BSPP
03BX = G 3/8" BSPP
06TX = SAE - #6
08TX = SAE - #8

"A" - ALUM. HOUSING
"S" - STEEL HOUSING

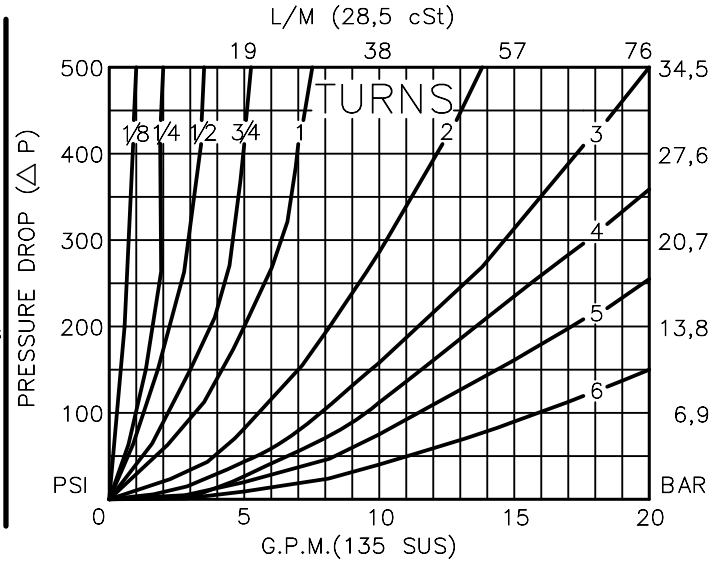

Phase-Out

BUCHER hydraulics

WWW.SUMY.IR

NEEDLE VALVE BI-DIRECTIONAL, POSITIVE SHUT-OFF.

DESCRIPTION

This unit is a SCREW IN, cartridge type, non-compensated, adjustable, bi-directional needle flow control valve.

OPERATIONS

This valve increases its orifice value from fully closed to fully open in 7 turns with counterclockwise rotation.

Positive shut-off.

FEATURES AND BENEFITS

Fine and low effort leakproof adjustment.
Effective adjustment is linear to seven turns.
All external carbon steel parts are plated for longer life against the elements.
All cartridge valves are 100% functionally tested.
Industry common cavity.

SPECIFICATIONS

OPERATING PRESSURE: 5,000 PSI [350 Bar]
PROOF PRESSURE: 10,000 PSI [700 Bar]
FLOW:18.0 GPM [68 l/m] nominal. See performance chart.
INTERNAL LEAKAGE: ZERO drops per minute maximum @ 5,000 PSI (350 Bar)
VALVE HOUSINGS: 2500 PSI [175 Bar] = Aluminum - Anodized.
5000 PSI [350 Bar] = Steel - Unplated.
OPERATING TEMPERATURE: -40° to +250° F. [-40° to +120° C.]
OPERATING MEDIA: All general purpose hydraulic fluids such as MIL-H-5606, SAE-#10, SAE-#20, etc.
INSTALLATION: No restrictions.
SEAL KIT: SKN-1022 Buna "N".
SKV-1022 Viton.
WEIGHT: .31 lb [.14 kg] cartridge only.
VALVE CAVITY: #C1020, See Page 0-012.0.

info.el@bucherhydraulics.com www.bucherhydraulics.com/commoncavity

© 2015 by Bucher Hydraulics, Inc., 2545 Northwest Parkway, Elgin, Illinois 60124, USA
All rights reserved.
Data is provided for the purpose of product description only, and must not be construed as warranted characteristics in the legal sense. The information does not relieve users from the duty of conducting their own evaluations and tests. Because the products are subject to continual improvement, we reserve the right to amend the product specifications contained in this catalogue.

Phase-Out

Cavity Type C1020

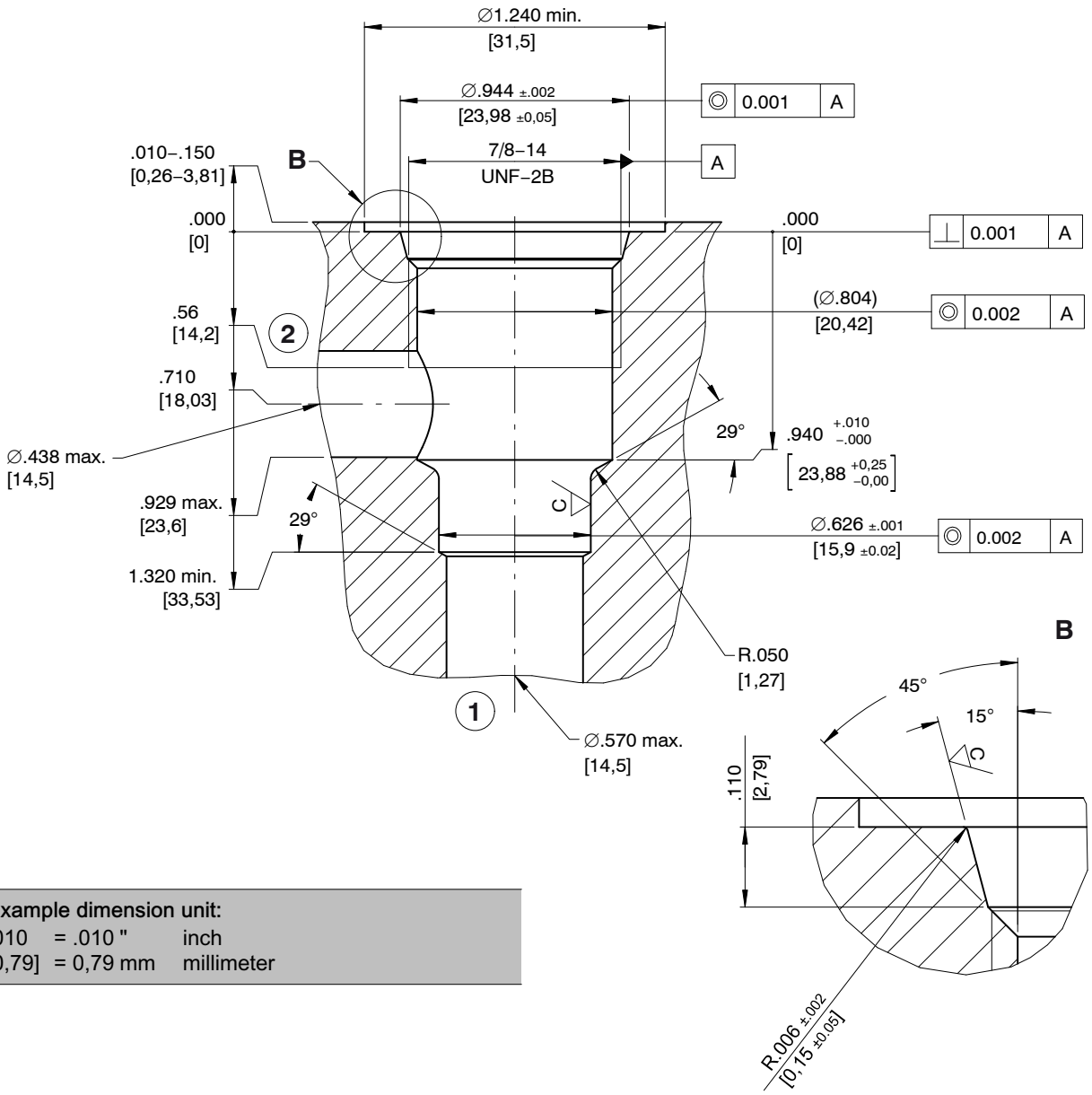

Example dimension unit:		
.010	= .010 "	inch
[0,79]	= 0,79 mm	millimeter

Dimension Tolerances	
Unless otherwise specified	
0.000	± .005″
0.00	± .010″
Angles	± 1/2°

Surface roughness		
Ra	C	D
	45 µin	125 µin
	(1.15 µm)	(3.2 µm)
	D Unless otherwise specified	

Reference: 520-P-000120-EN-01

1 Related data sheets

Reference	(Old no.)	Description
520-P-000050		The form-tool selling programme
520-P-000121	(0–012.1)	Line-mounting body, 10 Series – 2-way

info.el@bucherhydraulics.com www.bucherhydraulics.com/commoncavity

© 2016 by Bucher Hydraulics, Inc., 2545 Northwest Parkway, Elgin, Illinois 60124, USA
All rights reserved.
Data is provided for the purpose of product description only, and must not be construed as warranted characteristics in the legal sense. The information does not relieve users from the duty of conducting their own evaluations and tests. Because the products are subject to continual improvement, we reserve the right to amend the product specifications contained in this catalogue.

Classification: 430.Cavity.…

BUCHER hydraulics

MANUAL ROTARY FLOW CONTROL VALVE

WWW.SUMY.IR

2 1

TORQUE:
Steel = 55/60 Ft–Lb. [74/81 Nm]
Aluminum = 35/40 Ft–Lb. [47/54 Nm]

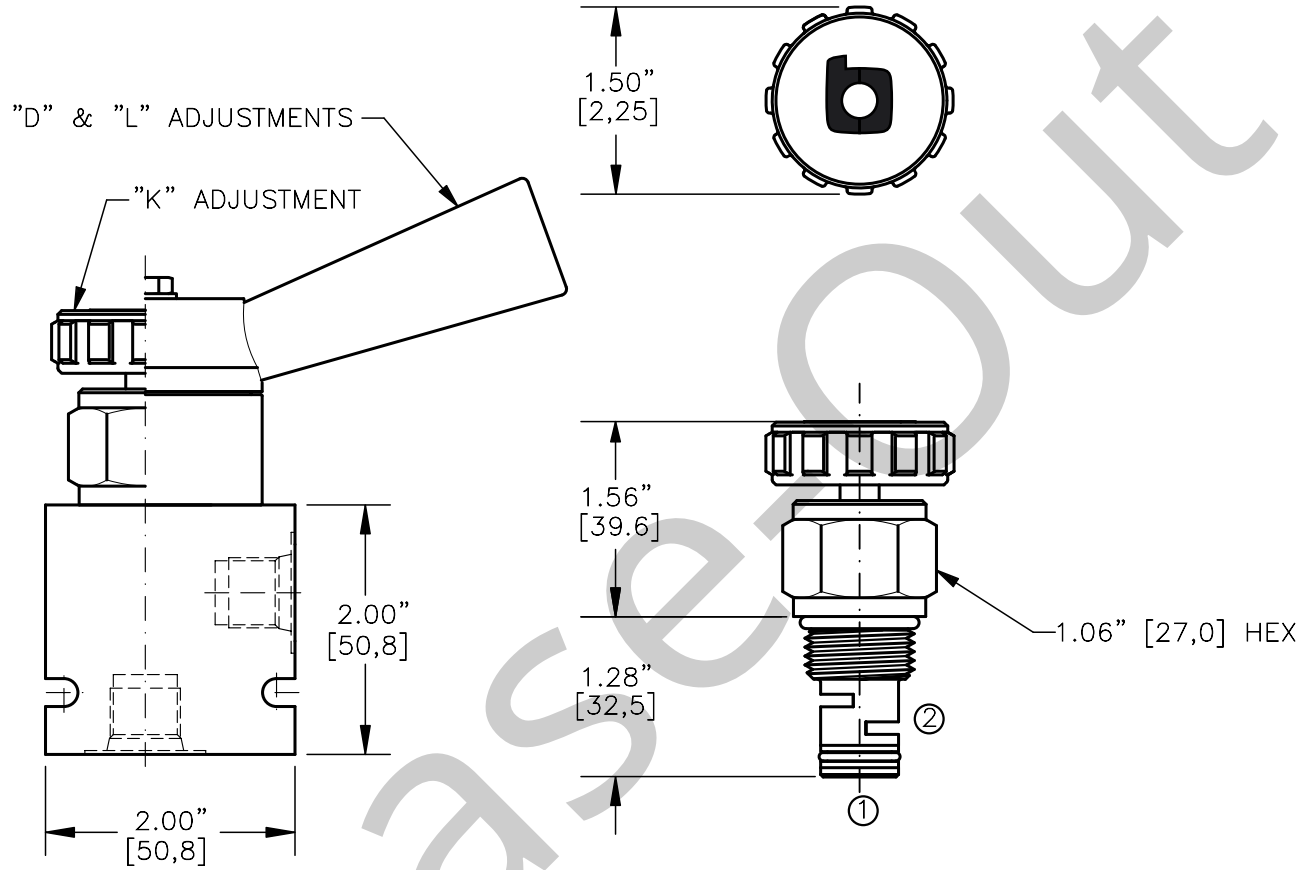

FOR ALUMINUM OR STEEL VALVE HOUSING CONFIGURATIONS SEE PAGE 0–012.1

MRFC–10–X–X–X

BASIC

SIZE
10 = 7/8"–14UNF

SEALS
N = BUNA "N" = VITON
V

ADJUSTMENT
K = HANDKNOB
H = METAL HANDKNOB
O = NO KNOB
G = GRADUATED METAL KNOB
D = LEVER WITH DETENTS
L = LEVER WITH FRICTION LOCK

PORTS
0 = CARTRIDGE ONLY
02BX = G 1/4" BSPP
03BX = G 3/8" BSPP
06TX = SAE – #6
08TX = SAE – #8
"A" = ALUM. HOUSING
"S" = STEEL HOUSING

FOR ADJUSTMENT CONTROL OPTIONS SEE PAGE 0–050.1

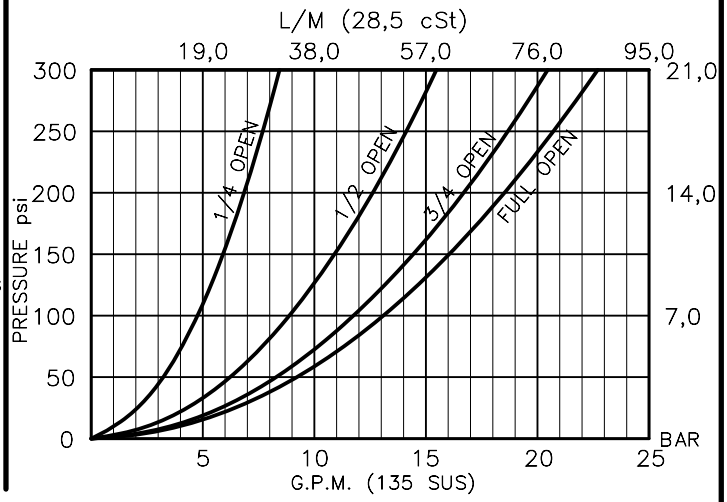

Phase-Out

BUCHER hydraulics

WWW.SUMY.IR

MANUAL ROTARY FLOW CONTROL VALVE

DESCRIPTION

This unit is a SCREW IN, cartridge type, non-compensated, adjustable, bi-directional rotary flow control valve.

OPERATIONS

This valve increases its orifice value from fully closed to fully open in 1/2 turn with counterclockwise rotation.

FEATURES AND BENEFITS

Fine and low effort leakproof adjustment; knob is optional.
All external carbon steel parts are plated for longer life against the elements.
All cartridge valves are 100% functionally tested.
Industry common cavity.

SPECIFICATIONS

OPERATING PRESSURE: 5,000 PSI [350 Bar]
PROOF PRESSURE: 10,000 PSI [700 Bar]
FLOW:18.0 GPM [68 l/m] nominal. See performance chart.
SHAFT ROTATION IS 160° FROM FULL OPEN TO CLOSED
INTERNAL LEAKAGE: 5 cu.in./min.[82 cc/m] @ 5,000 PSI (350 Bar)
VALVE HOUSINGS: 2500 PSI [175 Bar] = Aluminum – Anodized.
5000 PSI [350 Bar] = Steel – Unplated.
OPERATING TEMPERATURE: –40° to +250° F. [–40° to +120° C.]
OPERATING MEDIA: All general purpose hydraulic fluids such as MIL–H–5606, SAE–#10, SAE–#20, etc.
INSTALLATION: No restrictions.
SEAL KIT: SKN–1022 Buna "N".
SKV–1022 Viton.
WEIGHT: .31 lb [.14 kg] cartridge only.
VALVE CAVITY: #C1020, See Page 0–012.0.

Phase-Out

info.el@bucherhydraulics.com www.bucherhydraulics.com/commoncavity

© 2015 by Bucher Hydraulics, Inc., 2545 Northwest Parkway, Elgin, Illinois 60124, USA
All rights reserved.
Data is provided for the purpose of product description only, and must not be construed as warranted characteristics in the legal sense. The information does not relieve users from the duty of conducting their own evaluations and tests. Because the products are subject to continual improvement, we reserve the right to amend the product specifications contained in this catalogue.

BUCHER
hydraulics
WWW.SUMY.IR

General information
Cavity

Type series: AW

Dimensions and sectional view

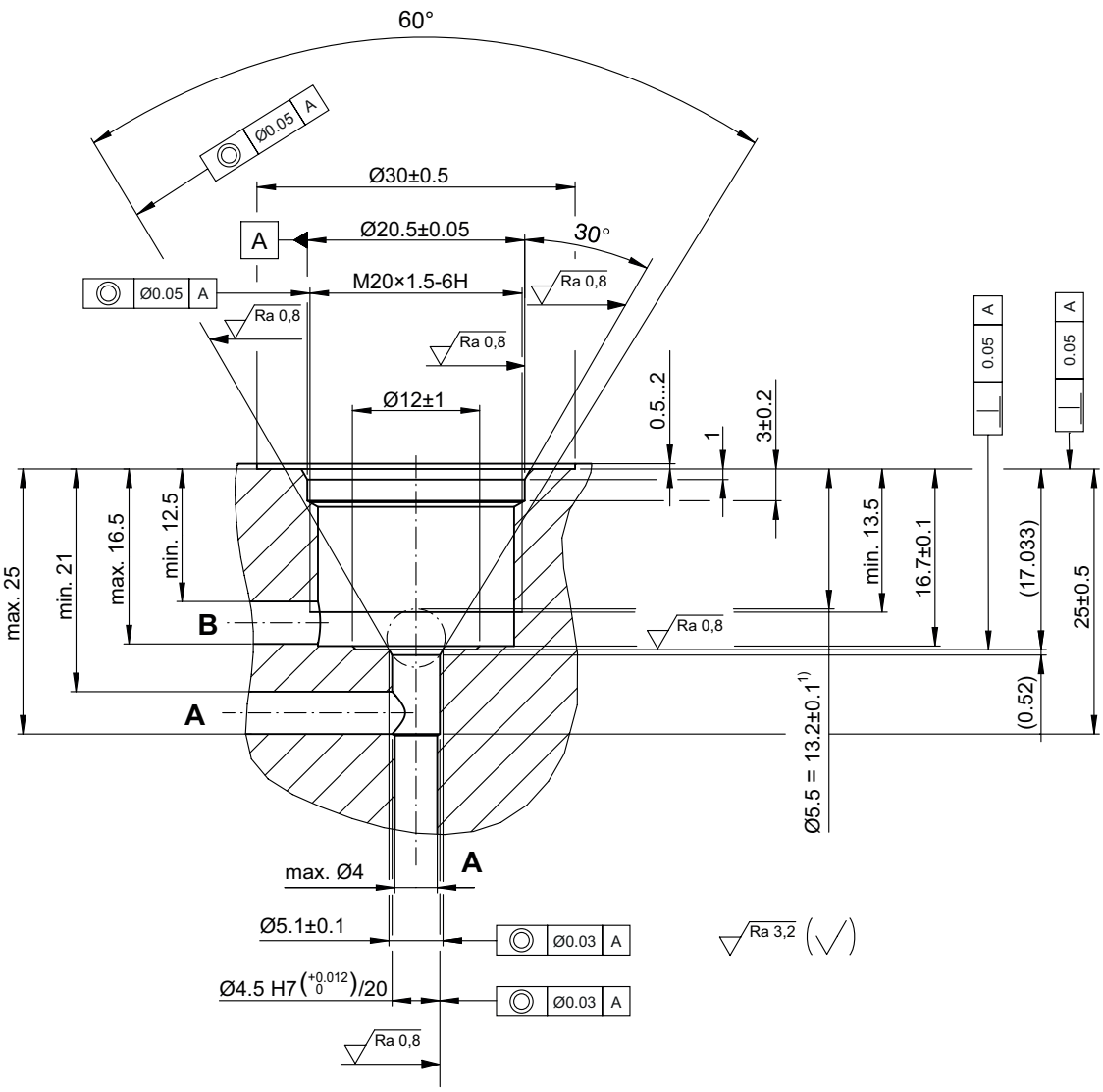

HINWEIS!
NOTE!

1) Kontrollmass mit Kugel Ø5.5
Reference dimension with ball Ø5.5

Beispiel für die Masseinheit:
Example for the dimensional units:

0.79 = 0.79 mm millimeter

Installation information

ATTENTION!
You must maintain the specified positional and diametral tolerances. To ensure trouble-free operation of the screw-in cartridges, we strongly recommend that pilot drilling, boring, reaming and cavity thread-cutting are always performed in one setup.

NOTE!
We offer form tool sets for sale or hire. For further information, see data sheet 400-P-040011.

NOTE!
Cavity type to factory standard.

info.ch@bucherhydraulics.com **www.bucherhydraulics.com**

© 2023 by Bucher Hydraulics AG Frutigen, 3714 Frutigen, Switzerland

All rights reserved.
Data is provided for the purpose of product description only, and must not be construed as warranted characteristics in the legal sense. The information does not relieve users from the duty of conducting their own evaluations and tests. Because the products are subject to continual improvement, we reserve the right to amend the product specifications contained in this catalogue.

BUCHER hydraulics
WWW.SUMY.IR

Flow valve
Throttle valve

Q_{max} = 50 l/min, p_{max} = 350 bar
poppet type, mechanically adjustable
Type series: MDPWA-5...

- Screw-in cartridge valve
- For cavity AW
- All external parts with zinc-nickel plating according to DIN EN ISO 19598
- Leak-free shut-off function
- For space-saving direct mounting in manifold blocks or housings
- Function possible in both directions.
- Available with hand-knob or tamper-proof cap

Description

These throttle valves, series MDPWA-5..., are size 5, mechanically operated screw-in cartridge valves with an M20×1.5 mounting thread. The vavles are designed on the poppet/seat principle, and they are therefore virtually leak-free in both directions of flow in the closed position. The pressure should preferably be connected to port A. These valves are mainly used in mobile and stationary applications where a flow needs to be manually throttled or blocked. The shut-off occurs directly on the seat edge of the manifold, which is why these valves are preferably used in steel blocks. In aluminum blocks, this screw-in valve is suitable as a throttle valve or emergency actuation. The setting is by means of an adjusting spindle. All external parts of the screw-in valves are zinc-nickel plated and are thus suitable for use in the harshest operating environments. For installation and further information, please refer to the section related data sheets.

Symbol

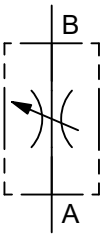

Throttle valve

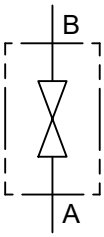

Drain valve

WWW.SUMY.IR

Technical data

General characteristics	Description, value, unit
Function group	Flow valve
Function	Throttle valve
Design	Screw-in cartridge valve
Controls	mechanically adjustable
Characteristic	poppet type
Construction size	NG 5
Thread size	M20×1,5
Mounting attitude	unrestricted
Weight	0.08 kg
Cavity acc. factory standard	For cavity AW
Tightening torque steel	50 Nm
Tightening torque aluminium	50 Nm
Tightening torque tolerance	± 10 %
Minimum ambient temperature	- 30 °C
Maximum ambient temperature	+ 80 °C
Surface protection	All external parts with zinc-nickel plating according to DIN EN ISO 19598
Sealing material	see ordering code
Seal kit order number	NBR: DS-410-N / FKM: DS-410-V

Hydraulic characteristics	Description, value, unit
Maximum operating pressure	350 bar
Maximum flow rate	50 l/min
Flow direction	see symbol
Hydraulic fluid	HL and HLP mineral oil according to DIN 51 524; other fluids on request!
Minimum fluid temperature	- 30 °C
Maximum fluid temperature	+ 80 °C
Viscosity range	10 ... 650 mm^2/s (cSt)
Recommended viscosity range	15 ... 250 mm^2/s (cSt)
Minimum fluid cleanliness (cleanlineless class according to ISO 4406:1999)	class 20/18/15

BUCHER
hydraulics
WWW.SUMY.IR

Performance graphs

measured with oil viscosity 33.0 mm²/s (cSt)

Δp = f (Q) Pressure drop-flow rate characteristic

Throttle setting per revolution A to B

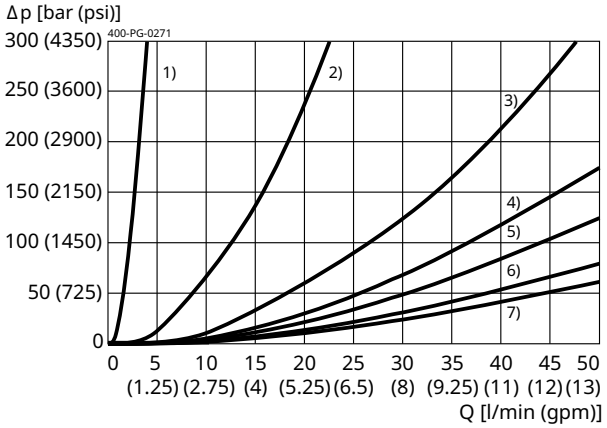

1) 1.5
2) 1 3/4
3) 2.0
4) 2 1/4
5) 2.5
6) 3.0
7) offen/open

Δp = f (Q) Pressure drop-flow rate characteristic

Throttle setting per revolution B to A

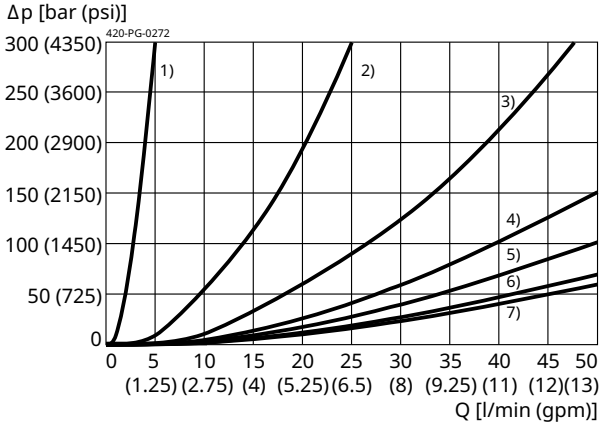

1) 1.5
2) 1 3/4
3) 2.0
4) 2 1/4
5) 2.5
6) 3.0
7) offen/open

Dimensions and sectional view

Beispiel für die Masseinheit: Exampel for the dimensional units:		
0.79	= 0.79 mm	millimeter
(.031)	= 0.031"	inch

Version "S": Einstellschraube mit Innensechskant (Standard)
Version "S": adjustment screw with internal hexagon (standard)

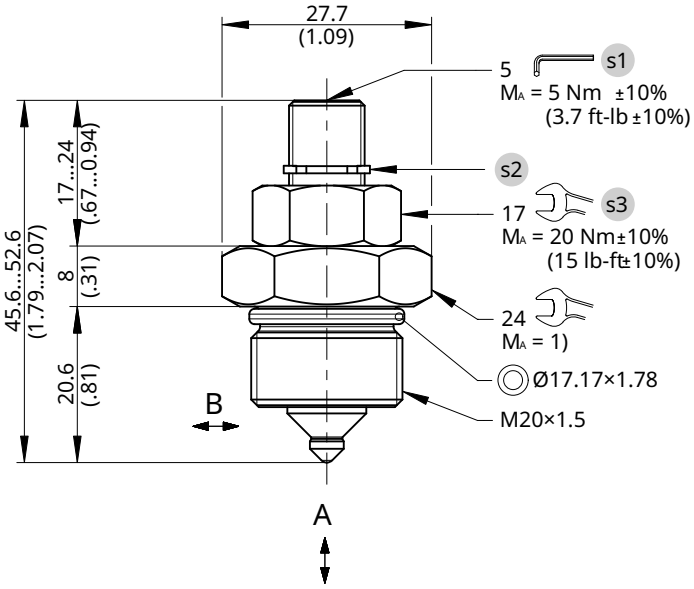

Version "H": Einstellschraube mit Handrad
Version "H": adjustment screw with handknob

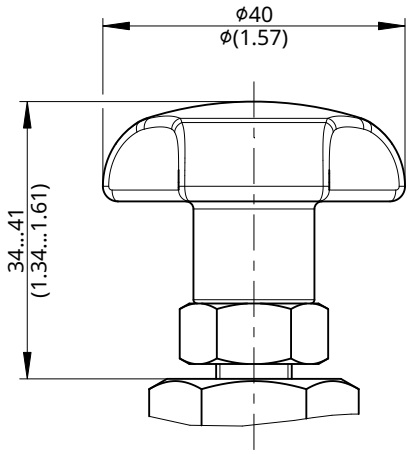

Einstellschraube mit Sicherungskappe
adjustment screw with tamper-proof cap

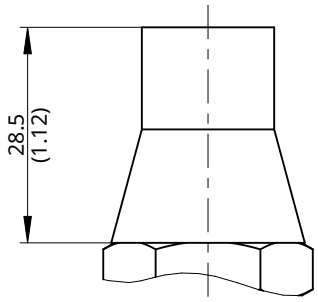

Installation information

NOTE!
1) When fitting the screw-in cartridge valve, use the specified tightening torque. The value can be found in the chapter "Technical data".

NOTE!
Set the required flow rate with the adjusting screw s1 . After you have set the valve, lock the adjusting screw s1 with the lock nut s3.

IMPORTANT!
To prevent damage on the poppet-seat, the torque for the adjusting screw s1 must be observed.

NOTE!
Valve settings can be sealed by fitting the tamper-proof cap. To fit the cap, the snap ring s2 has to be removed. Subsequent adjustment is only possible by destroying the tamper-proof cap.

NOTE!
The seals are not available individually. The seal kit order number can be found in the chapter "Technical data".

ATTENTION!
Only qualified personnel with mechanical skills may carry out any maintenance work. Generally, the only work that should ever be undertaken is to check, and possibly replace, the seals. When changing seals, oil or grease the new seals thoroughly before fitting them.

Ordering code

Ex. M DP W A - 5 S _ - 1

M	=	flow-regulating valve
DP	=	throttle cartridge
W	=	cavity type AW
A ... Q	=	standard model according to valid data sheet
Z ... R	=	special model (on request)
5	=	nominal size 5
S	=	adjustment screw with internal hexagon (standard)
H	=	adjustment screw with hand knob
(blank)	=	NBR (nitril-butadien-rubber / BUNA) seals (standard)
V	=	FKM (fluorocarbon rubber / VITON) seals (special seals on request)
1 ... 9	=	technical design no. (omit by ordering)

IMPORTANT!
When required, the tamper-proof cap (the adjustment seal) must be ordered separately in plain language.

Related data sheets

Reference	Description
400-P-040011	Form tools
400-P-040251	Cavity AW

info.ch@bucherhydraulics.com **www.bucherhydraulics.com**

© 2025 by Bucher Hydraulics AG Frutigen, 3714 Frutigen, Switzerland

All rights reserved.
Data is provided for the purpose of product description only, and must not be construed as warranted characteristics in the legal sense. The information does not relieve users from the duty of conducting their own evaluations and tests. Because the products are subject to continual improvement, we reserve the right to amend the product specifications contained in this catalogue.

BUCHER hydraulics
WWW.SUMY.IR

General information
Cavity

Type series: CA

Dimensions and sectional view

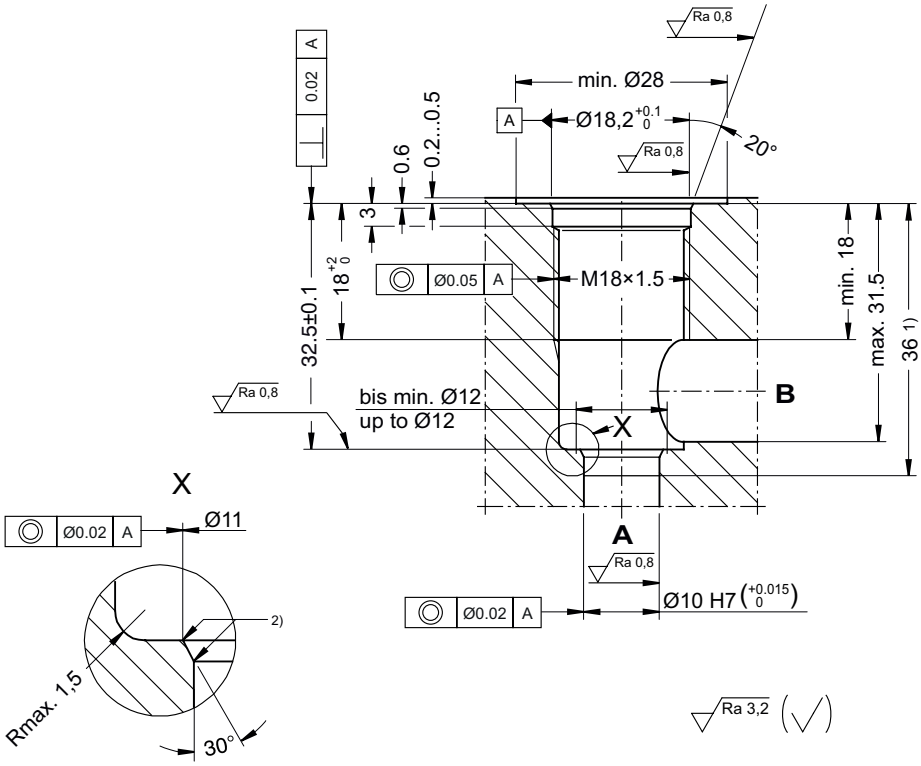

HINWEIS!
NOTE!

1) Passungstiefe
Minimum depth of specified diametral tolerance

2) scharfkantig und gratfrei
sharp-edged and free of burrs

Beispiel für die Masseinheit:
Example for the dimensional units:

0.79 = 0.79 mm millimeter

Installation information

ATTENTION!
You must maintain the specified positional and diametral tolerances. To ensure trouble-free operation of the screw-in cartridges, we strongly recommend that pilot drilling, boring, reaming and cavity thread-cutting are always performed in one setup.

NOTE!
We offer form tool sets for sale or hire. For further information, see data sheet 400-P-040011.

NOTE!
Cavity type to factory standard.

info.ch@bucherhydraulics.com **www.bucherhydraulics.com**

© 2023 by Bucher Hydraulics AG Frutigen, 3714 Frutigen, Switzerland

All rights reserved.
Data is provided for the purpose of product description only, and must not be construed as warranted characteristics in the legal sense. The information does not relieve users from the duty of conducting their own evaluations and tests. Because the products are subject to continual improvement, we reserve the right to amend the product specifications contained in this catalogue.

BUCHER hydraulics
WWW.SUMY.IR

Flow valve
Throttle valve

Q_{max} = 140 l/min, p_{max} = 350 bar
poppet type, mechanically adjustable
Type series: MDPAA-10...

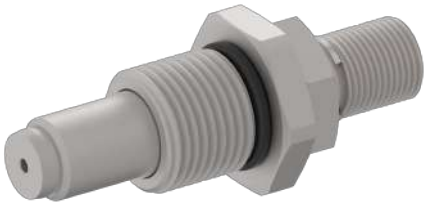

- Screw-in cartridge valve
- For cavity CA
- All external parts with zinc-nickel plating according to DIN EN ISO 19598
- Leak-free shut-off function
- For space-saving direct mounting in manifold blocks or housings
- Function possible in both directions.
- Available with hand-knob

Description

These throttle valves, series MDPAA-10..., are size 10, mechanically operated screw-in cartridge valves with an M18×1.5 mounting thread. The vavles are designed on the poppet/seat principle, and they are therefore virtually leak-free in both directions of flow in the closed position. The pressure should preferably be connected to port A. These valves are mainly used in mobile and stationary applications where a flow needs to be manually throttled or blocked. The setting is by means of an adjusting spindle. All external parts of the screw-in valves are zinc-nickel plated and are thus suitable for use in the harshest operating environments. For installation and further information, please refer to the section related data sheets.

Symbol

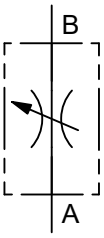

Throttle valve

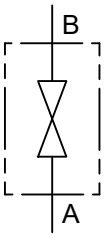

Drain valve

WWW.SUMY.IR

Technical data

General characteristics	Description, value, unit
Function group	Flow valve
Function	Throttle valve
Design	Screw-in cartridge valve
Controls	mechanically adjustable
Characteristic	poppet type
Construction size	NG 10
Thread size	M18×1,5
Mounting attitude	unrestricted
Weight	0.10 kg
Cavity acc. factory standard	For cavity CA
Tightening torque steel	50 Nm
Tightening torque aluminium	50 Nm
Tightening torque tolerance	± 10 %
Minimum ambient temperature	- 30 °C
Maximum ambient temperature	+ 80 °C
Surface protection	All external parts with zinc-nickel plating according to DIN EN ISO 19598
Seal kit order number	NBR: DS-253-N / FKM: DS-253-V

Hydraulic characteristics	Description, value, unit
Maximum operating pressure	350 bar
Maximum flow rate	140 l/min
Flow direction	see symbol
Hydraulic fluid	HL and HLP mineral oil according to DIN 51 524; other fluids on request!
Minimum fluid temperature	- 30 °C
Maximum fluid temperature	+ 80 °C
Viscosity range	10 ... 650 mm^2/s (cSt)
Recommended viscosity range	15 ... 250 mm^2/s (cSt)
Minimum fluid cleanliness (cleanlineless class according to ISO 4406:1999)	class 20/18/15

BUCHER hydraulics
WWW.SUMY.IR

Performance graphs

measured with oil viscosity 33.0 mm²/s (cSt)

Δp = f (Q) Pressure drop-flow rate characteristic
Throttle setting per revolution A to B

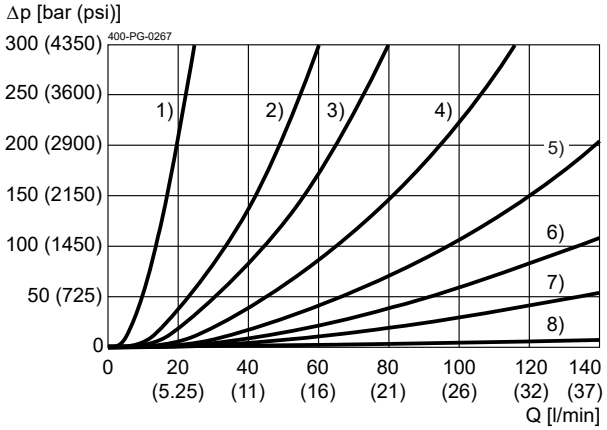

1) 1.0
2) 1.5
3) 2.0
4) 2 1/4
5) 2.5
6) 2 3/4
7) 3.0
8) offen/open

Δp = f (Q) Pressure drop-flow rate characteristic
Throttle setting per revolution B to A

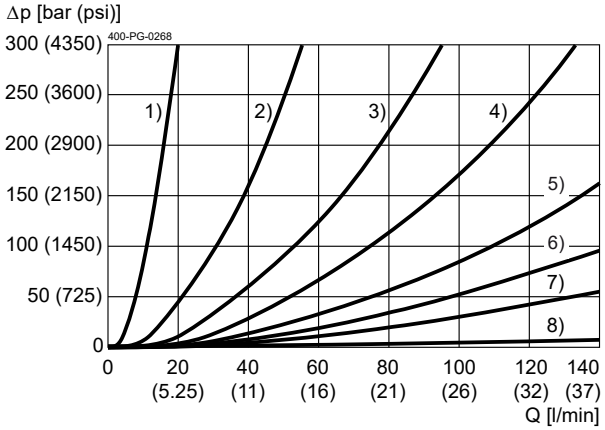

1) 1.0
2) 1.5
3) 2.0
4) 2 1/4
5) 2.5
6) 2 3/4
7) 3.0
8) offen/open

Dimensions and sectional view

Beispiel für die Masseinheit:
Exampel for the dimensional units:

0.79	= 0.79 mm	millimeter
(.031)	= 0.031"	inch

Version "S": Einstellschraube mit Innensechskant (Standard)
Version "S": adjustment screw with internal hexagon (standard)

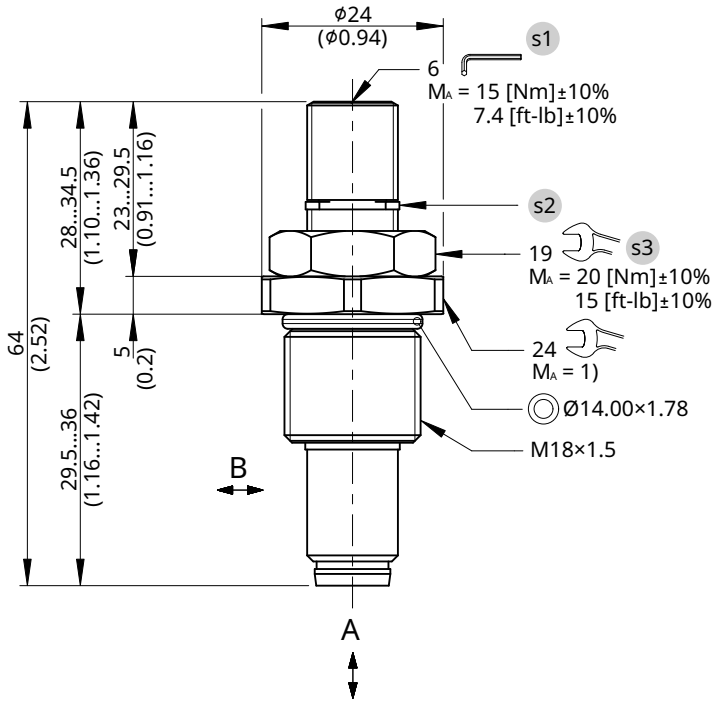

Version "H": Einstellschraube mit Handrad
Version "H": adjustment screw with handknob

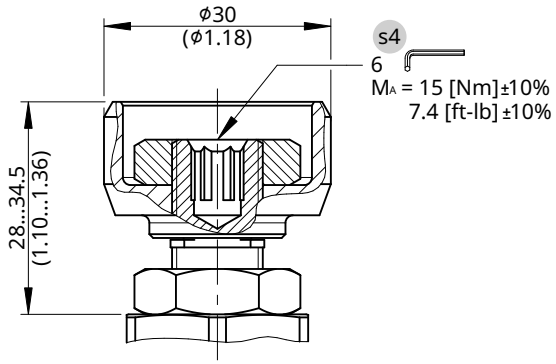

Installation information

NOTE!
1) When fitting the screw-in cartridge valve, use the specified tightening torque. The value can be found in the chapter "Technical data".

NOTE!
Set the required flow rate with the adjusting screw s1 . After you have set the valve, lock the adjusting screw s1 with the lock nut s3.

IMPORTANT!
To prevent damage on the poppet-seat, the torque for the adjusting screw s1 must be observed.

NOTE!
The seals are not available individually. The seal kit order number can be found in the chapter "Technical data".

ATTENTION!
Difficult adjustment by handknob from 150 bar, it is recommended to adjust the adjusting spindle with the hexagon socket s4 .

ATTENTION!
Only qualified personnel with mechanical skills may carry out any maintenance work. Generally, the only work that should ever be undertaken is to check, and possibly replace, the seals. When changing seals, oil or grease the new seals thoroughly before fitting them.

Ordering code

Ex. M | DP | A | A - 10 | S | _ - 1

M	=	flow-regulating valve
DP	=	throttle cartridge
A	=	cavity type CA
A ... Q	=	standard model according to valid data sheet
Z ... R	=	special model (on request)
10	=	nominal size 10
S	=	adjustment screw with internal hexagon **(standard)**
H	=	adjustment screw with hand knob
(blank)	=	NBR (nitril-butadien-rubber / BUNA) seals **(standard)**
V	=	FKM (fluorocarbon rubber / VITON) seals (special seals on request)
1 ... 9	=	technical design no. (omit by ordering)

Related data sheets

Reference	Description
400-P-040011	Form tools
400-P-060101	Cavity CA

info.ch@bucherhydraulics.com **www.bucherhydraulics.com**

© 2025 by Bucher Hydraulics AG Frutigen, 3714 Frutigen, Switzerland

All rights reserved.
Data is provided for the purpose of product description only, and must not be construed as warranted characteristics in the legal sense. The information does not relieve users from the duty of conducting their own evaluations and tests. Because the products are subject to continual improvement, we reserve the right to amend the product specifications contained in this catalogue.

BUCHER hydraulics

FLOW CONTROL VALVE WITH OR WITHOUT FREE REVERSE FLOW CHECK

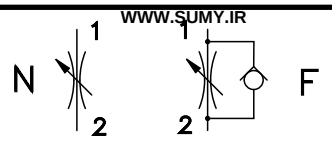

WWW.SUMY.IR

TORQUE:
Steel = 35/40 Ft–Lb. [47/54 Nm]
Aluminum = 25/30 Ft–Lb. [34/41 Nm]

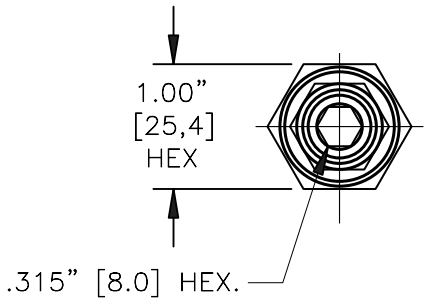

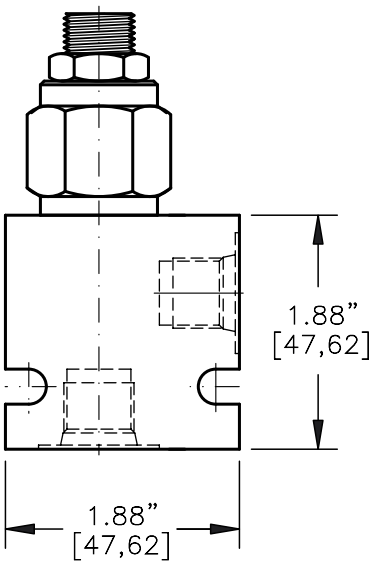

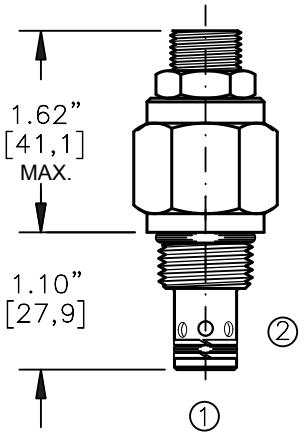

FOR ALUMINUM OR STEEL VALVE HOUSING CONFIGURATIONS SEE PAGE 0–011.1

FCVL–08–X–X–X–X

BASIC

SIZE
08 = 3/4"–16 UNF

SEALS
N = BUNA "N"
V = VITON

ADJUSTMENT
S = ADJUSTING SCREW
C = CAPPED
T = TAMPERPROOF
K = HANDKNOB
M = METAL HANDKNOB

PORTS
0 = CARTRIDGE ONLY
02BX = G 1/4" BSPP
06TX = SAE – #6
"A" – ALUM. HOUSING
"S" – STEEL HOUSING

TYPE
F–FREE FLOW CHECK
N–NEEDLE VALVE

FOR ADJUSTMENT CONTROL OPTIONS SEE PAGE 0–050.0

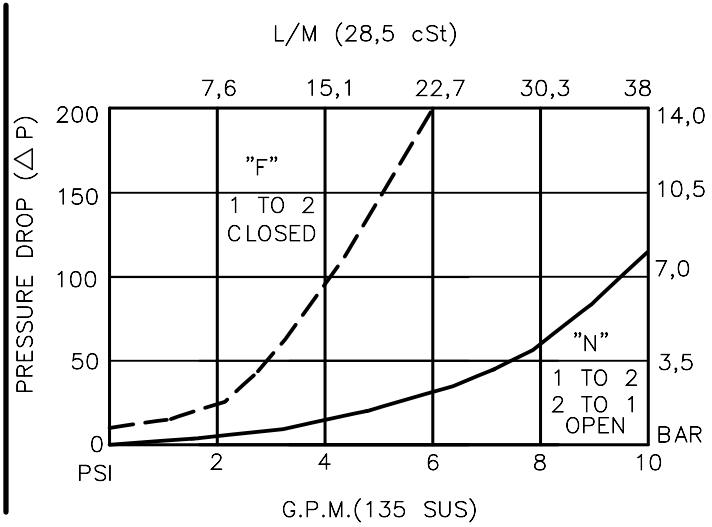

BUCHER hydraulics

WWW.SUMY.IR

FLOW CONTROL VALVE WITH OR WITHOUT FREE REVERSE FLOW CHECK

DESCRIPTION

This unit is a SCREW IN, cartridge type, adjustable, poppet type, hydraulic flow control valve with or without free reverse flow check.

OPERATIONS

This valve increases its orifice value from fully closed to fully open with counter-clockwise rotation.

FEATURES AND BENEFITS

Desired settings can be locked down.
Valve adjustment is difficult while subjected to high pressure.
Valve is available with a screw, tamperproof, capped or knob adjustment.
All external carbon steel parts are plated for longer life against the elements.
All cartridge valves are 100% functionally tested.
Industry common cavity.

SPECIFICATIONS

OPERATING PRESSURE: 5,000 PSI [350 Bar]
PROOF PRESSURE: 10,000 PSI [700 Bar]
FLOW:10.0 GPM [38,0 l/m] nominal. See performance chart.
INTERNAL LEAKAGE: 5 drops per minute maximum @ 5,000 PSI (350 Bar)
VALVE HOUSINGS: 2500 PSI [175 Bar] = Aluminum - Anodized.
5000 PSI [350 Bar] = Steel - Unplated.
OPERATING TEMPERATURE: -40° to +250° F. [-40° to +120° C.]
OPERATING MEDIA: All general purpose hydraulic fluids such as MIL-H-5606, SAE-#10, SAE-#20, etc.
INSTALLATION: No restrictions.
SEAL KIT: SKN-0822 Buna "N".
SKV-0822 Viton.
WEIGHT: .30 lb [.14 kg] cartridge only.
VALVE CAVITY: #C0820, See Page 0-011.0.

info.el@bucherhydraulics.com

www.bucherhydraulics.com/commoncavity

© 2026 by Bucher Hydraulics, Inc., 2545 Northwest Parkway, Elgin, Illinois 60124, USA
All rights reserved.
Data is provided for the purpose of product description only, and must not be construed as warranted characteristics in the legal sense. The information does not relieve users from the duty of conducting their own evaluations and tests. Because the products are subject to continual improvement, we reserve the right to amend the product specifications contained in this catalogue.

BUCHER hydraulics

FLOW CONTROL VALVE WITH OR WITHOUT FREE REVERSE FLOW CHECK

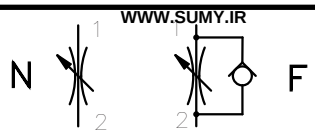

WWW.SUMY.IR

TORQUE:
Steel = 55/60 Ft–Lb. [74/81 Nm]
Aluminum = 35/40 Ft–Lb. [47/54 Nm]

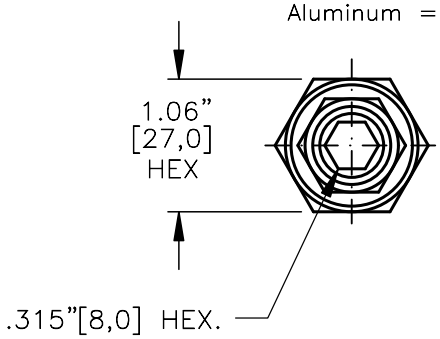

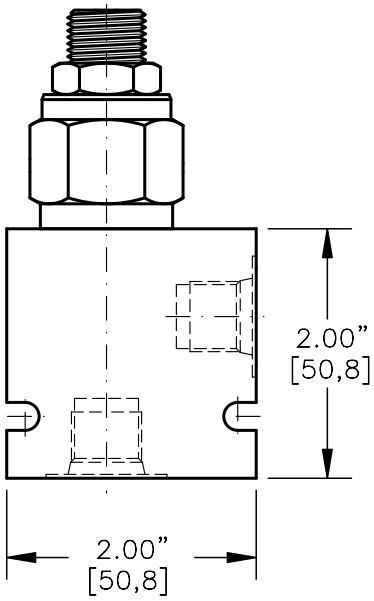

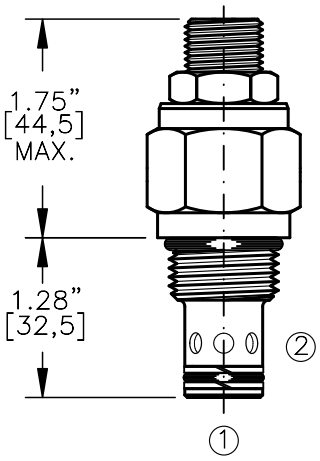

FOR ALUMINUM OR STEEL VALVE HOUSING CONFIGURATIONS SEE PAGE 0–012.1

FCVL–10–X–X–X–X

BASIC

SIZE
10 = 7/8"–14 UNF

SEALS
N = BUNA "N"
V = VITON

ADJUSTMENT
S = ADJUSTING SCREW
C = CAPPED
T = TAMPERPROOF
K = HANDKNOB
M = METAL HANDKNOB

PORTS
0 = CARTRIDGE ONLY
02BX = G 1/4" BSPP
03BX = G 3/8" BSPP
06TX = SAE – #6
08TX = SAE – #8
"A" – ALUM. HOUSING
"S" – STEEL HOUSING

TYPE
F –FREE FLOW CHECK
N –NEEDLE VALVE

FOR ADJUSTMENT CONTROL OPTIONS SEE PAGE 0–050.0

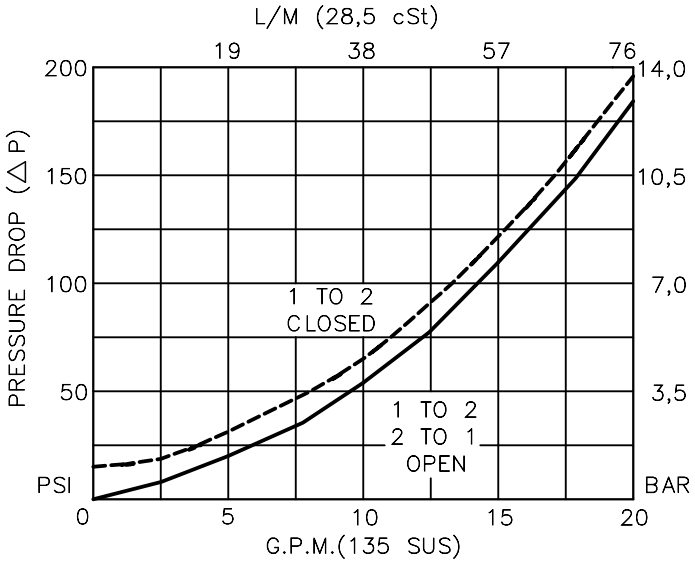

BUCHER hydraulics

WWW.SUMY.IR

FLOW CONTROL VALVE
WITH OR WITHOUT FREE REVERSE FLOW CHECK

DESCRIPTION

This unit is a SCREW IN, cartridge type, adjustable, poppet type, hydraulic flow control valve with or without free reverse flow check.

OPERATIONS

This valve increases its orifice value from fully closed to fully open with counter-clockwise rotation.

FEATURES AND BENEFITS

Desired settings can be locked down.
Valve adjustment is difficult while subjected to high pressure.
Valve is available with a screw, tamperproof, capped or knob adjustment.
All external carbon steel parts are plated for longer life against the elements.
All cartridge valves are 100% functionally tested.
Industry common cavity.

SPECIFICATIONS

OPERATING PRESSURE: 5,000 PSI [350 Bar]
PROOF PRESSURE: 10,000 PSI [700 Bar]
FLOW:18.0 GPM [68 l/m] nominal. See performance chart.
INTERNAL LEAKAGE: 5 drops per minute maximum @ 5,000 PSI (350 Bar)
VALVE HOUSINGS: 2500 PSI [175 Bar] = Aluminum - Anodized.
5000 PSI [350 Bar] = Steel - Unplated.
OPERATING TEMPERATURE: -40° to +250° F. [-40° to +120° C.]
OPERATING MEDIA: All general purpose hydraulic fluids such as MIL-H-5606, SAE-#10, SAE-#20, etc.
INSTALLATION: No restrictions.
SEAL KIT: SKN-1022 Buna "N".
SKV-1022 Viton.
WEIGHT: .38 lb [.17 kg] cartridge only.
VALVE CAVITY: #C1020, See Page 0-012.0.

info.el@bucherhydraulics.com

www.bucherhydraulics.com/commoncavity

© 2015 by Bucher Hydraulics, Inc., 2545 Northwest Parkway, Elgin, Illinois 60124, USA
All rights reserved.
Data is provided for the purpose of product description only, and must not be construed as warranted characteristics in the legal sense. The information does not relieve users from the duty of conducting their own evaluations and tests. Because the products are subject to continual improvement, we reserve the right to amend the product specifications contained in this catalogue.

BUCHER hydraulics

WWW.SUMY.IR

FLOW CONTROL VALVE WITH OR WITHOUT FREE REVERSE FLOW CHECK

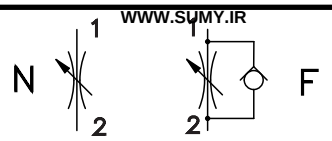

TORQUE:
Steel = 70/75 Ft–Lb. [95/102 Nm]
Aluminum = 55/60 Ft–Lb. [74/81 Nm]

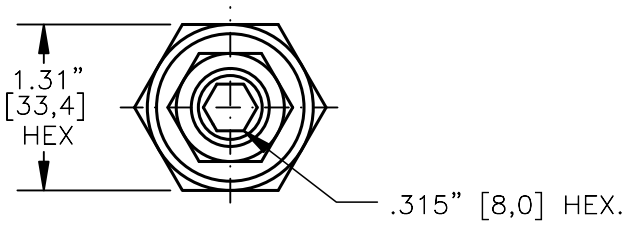

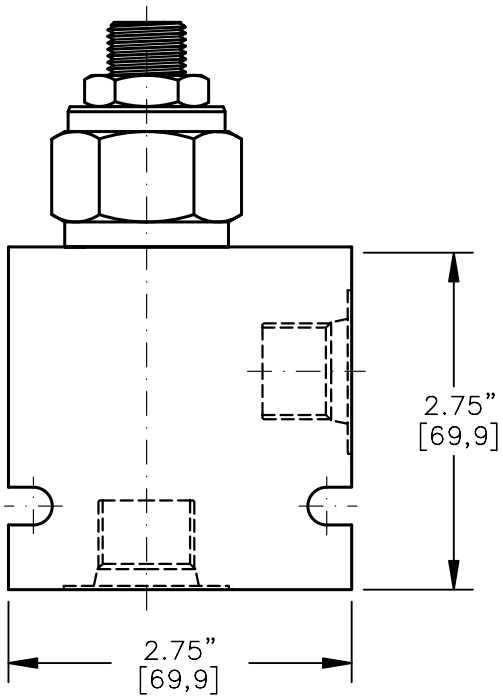

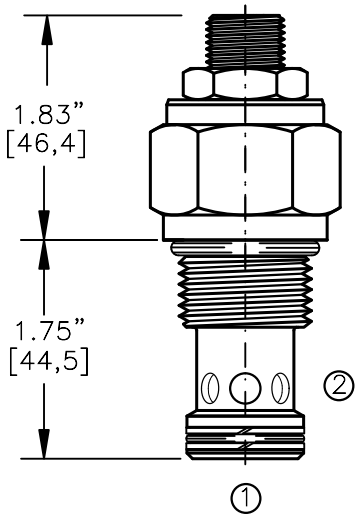

FOR ALUMINUM OR STEEL VALVE HOUSING CONFIGURATIONS SEE PAGE 0–013.1

FCVL–12–X–X–X–X

BASIC

SIZE
12 = 1.062–12 UNF

SEALS
N = BUNA "N"
V = VITON

ADJUSTMENT
S = ADJUSTING SCREW
C = CAPPED
T = TAMPERPROOF
K = HANDKNOB
M = METAL HANDKNOB

PORTS
0 = CARTRIDGE ONLY
04BX = G 1/2" BSPP
06BX = G 3/4" BSPP
10TX = SAE – #10
12TX = SAE – #12
"A" – ALUM. HOUSING
"S" – STEEL HOUSING

TYPE
F –FREE FLOW CHECK
N –NEEDLE VALVE

FOR ADJUSTMENT CONTROL OPTIONS SEE PAGE 0–050.0

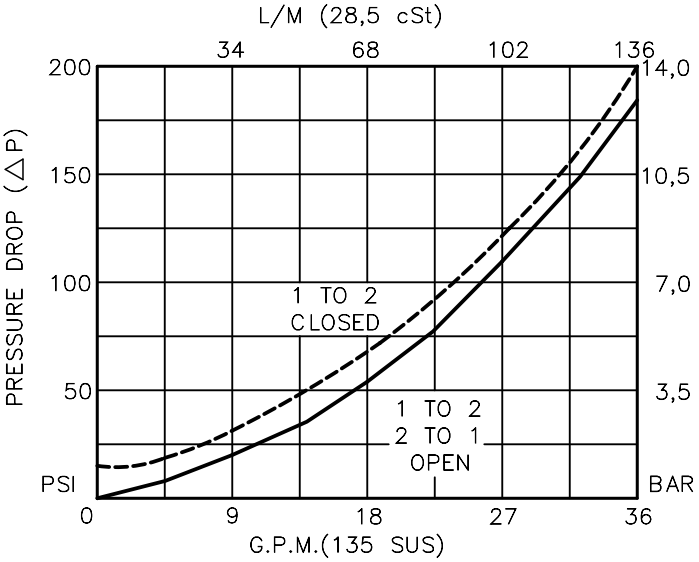

BUCHER hydraulics

WWW.SUMY.IR

FLOW CONTROL VALVE
WITH OR WITHOUT FREE REVERSE FLOW CHECK

DESCRIPTION

This unit is a SCREW IN, cartridge type, adjustable, poppet type, hydraulic flow control valve with or without free reverse flow check.

OPERATIONS

This valve increases its orifice value from fully closed to fully open with counter-clockwise rotation.

FEATURES AND BENEFITS

Desired settings can be locked down.
Valve adjustment is difficult while subjected to high pressure.
Valve is available with a screw, tamperproof, capped or knob adjustment.
All external carbon steel parts are plated for longer life against the elements.
All cartridge valves are 100% functionally tested.
Industry common cavity.

SPECIFICATIONS

OPERATING PRESSURE: 5,000 PSI [350 Bar]
PROOF PRESSURE: 10,000 PSI [700 Bar]
FLOW:36.0 GPM [136 l/m] nominal. See performance chart.
INTERNAL LEAKAGE: 5 drops per minute maximum @ 5,000 PSI (350 Bar)
VALVE HOUSINGS: 2500 PSI [175 Bar] = Aluminum - Anodized.
5000 PSI [350 Bar] = Steel - Unplated.
OPERATING TEMPERATURE: -40° to +250° F. [-40° to +120° C.]
OPERATING MEDIA: All general purpose hydraulic fluids such as MIL-H-5606, SAE-#10, SAE-#20, etc.
INSTALLATION: No restrictions.
SEAL KIT: SKN-1222 Buna "N".
SKV-1222 Viton.
WEIGHT: .63 lb [.25 kg] cartridge only.
VALVE CAVITY: #C1220, See Page 0-013.0.

info.el@bucherhydraulics.com www.bucherhydraulics.com/commoncavity

© 2015 by Bucher Hydraulics, Inc., 2545 Northwest Parkway, Elgin, Illinois 60124, USA
All rights reserved.
Data is provided for the purpose of product description only, and must not be construed as warranted characteristics in the legal sense. The information does not relieve users from the duty of conducting their own evaluations and tests. Because the products are subject to continual improvement, we reserve the right to amend the product specifications contained in this catalogue.

BUCHER hydraulics

WWW.SUMY.IR

General information Cavity

Type series: DF

Dimensions and sectional view

Beispiel für die Masseinheit:
Example for the dimensional units:
0.79 = 0.79 mm millimeter

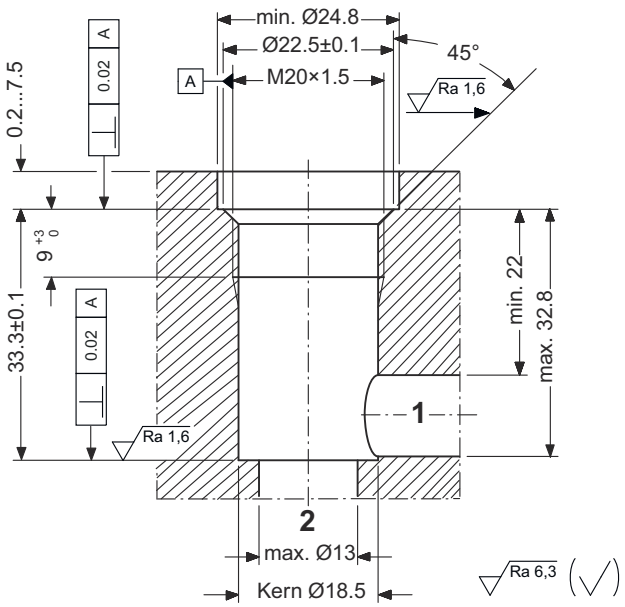

Installation information

ATTENTION!
You must maintain the specified positional and diametral tolerances. To ensure trouble-free operation of the screw-in cartridges, we strongly recommend that pilot drilling, boring, reaming and cavity thread-cutting are always performed in one setup.

NOTE!
Cavity type to factory standard.

IMPORTANT!
We offer form tool sets for sale or hire. See data sheet 400-P-040011 for further information.

WWW.SUMY.IR

info.ch@bucherhydraulics.com **www.bucherhydraulics.com**

© 2025 by Bucher Hydraulics AG Frutigen, 3714 Frutigen, Switzerland

All rights reserved.
Data is provided for the purpose of product description only, and must not be construed as warranted characteristics in the legal sense. The information does not relieve users from the duty of conducting their own evaluations and tests. Because the products are subject to continual improvement, we reserve the right to amend the product specifications contained in this catalogue.

WWW.SUMY.IR

Flow valve
Throttle check valve

Q_{max} = 80 l/min, p_{max} = 350 bar
direct acting, spool type, mechanically adjustable
Type series: MDR2-6F-...A

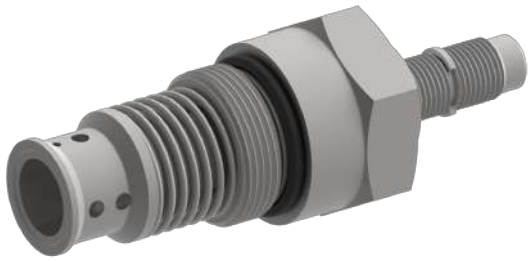

- Screw-in cartridge valve
- For cavity DF
- All external parts with zinc-nickel plating according to DIN EN ISO 19598
- Same cavity for NG6 and NG10
- Self-locking adjustment spindle with lock nut
- Fine opening in the lower volume range
- Self-cleaning throttle point

Description

Series MDR2-... throttle check valves are size 6 screw-in units with an M20 x 1.5 mounting thread. They are designed as semi-cartridges and have an integral bypass check valve. The flow rate in direction 1 to 2 can be adjusted using the adjusting screw. In flow direction 2 to 1, the throttle function is bypassed because the flow passes through the check valve. The valve design ensures automatic self-cleaning during reverse flow. All external parts of the screw-in valve are zinc-nickel plated and are thus suitable for use in the harshest operating environments. These 2-way flow control cartridges are used in mobile and industrial applications. If you intend to manufacture your own cavities, please refer to the section "Related data sheets".

Symbol

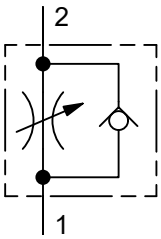

WWW.SUMY.IR

Technical data

General characteristics	Description, value, unit
Function group	Flow valve
Function	Throttle check valve
Design	Screw-in cartridge valve
Controls	mechanically adjustable
Characteristic	direct acting, spool type
Construction size	NG 6
Thread size	M20×1,5
Mounting attitude	unrestricted
Weight	0.18 kg
Cavity acc. factory standard	For cavity DF
Tightening torque steel	50 Nm
Tightening torque aluminium	50 Nm
Tightening torque tolerance	± 10 %
Minimum ambient temperature	- 30 °C
Maximum ambient temperature	+ 80 °C
Surface protection	All external parts with zinc-nickel plating according to DIN EN ISO 19598
Sealing material	see ordering code
Seal kit order number	NBR: DS-546-N / FKM: DS-546-V

Hydraulic characteristics	Description, value, unit
Maximum operating pressure	350 bar
Maximum flow rate	80 l/min
Restriction of the flow rate	NG 6 = 80 l/min
Flow direction	see symbol
Hydraulic fluid	mineral-based or synthetics with lubricating properties. HL and HLP mineral oil according to DIN 51 524; other fluids on request!
Minimum fluid temperature	- 30 °C
Maximum fluid temperature	+ 80 °C
Viscosity range	10 ... 500 mm^2/s (cSt)
Recommended viscosity range	15 ... 250 mm^2/s (cSt)
Minimum fluid cleanliness (cleanlineless class according to ISO 4406:1999)	class 20/18/15
Definition of cracking pressure for check valve	0,7

BUCHER hydraulics
WWW.SUMY.IR

Performance graphs

measured with oil viscosity 33.0 mm²/s (cSt)

p = f (Q) Pressure-flow rate

Adjustment, normal opening
Measured via check valve

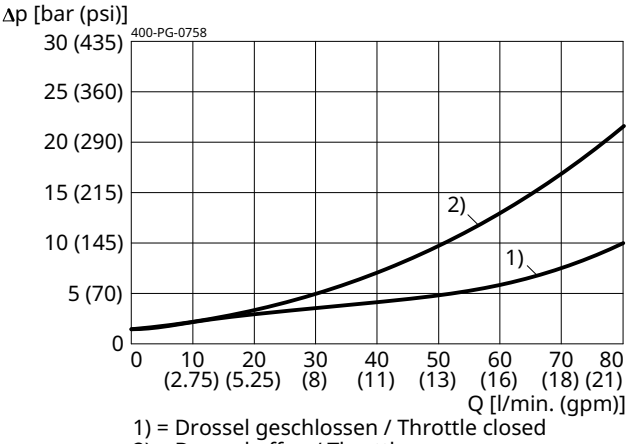

1) = Drossel geschlossen / Throttle closed
2) = Drossel offen / Throttle open

p = f (Q) Pressure-flow rate

Adjustment, fine opening
Measured via check valve

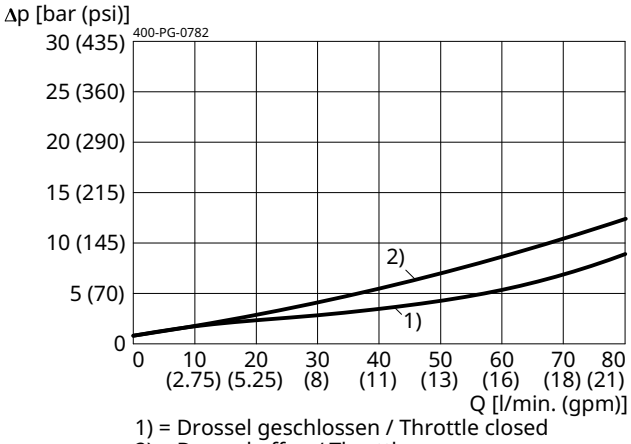

1) = Drossel geschlossen / Throttle closed
2) = Drossel offen / Throttle open

Q = f (I:Δp) Flow rate adjustment

Adjustment, normal opening
Measured with supply channel 1 and 2 = Ø7mm
At constant throttle settings

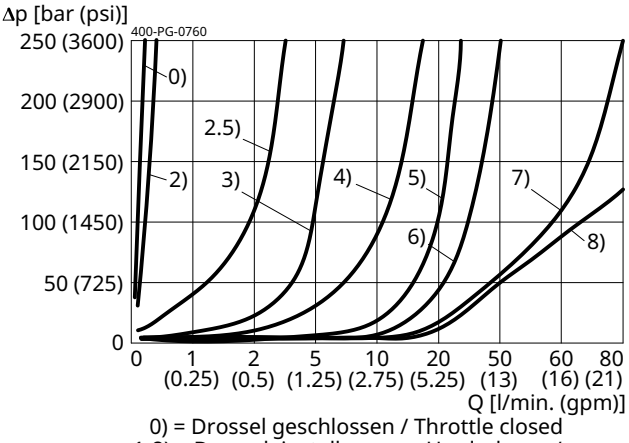

0) = Drossel geschlossen / Throttle closed
1-8) = Drosseleinstellung pro Umdrehung / Throttle setting per revolution

Q = f (I:Δp) Flow rate adjustment

Adjustment, fine opening
Measured with supply channel 1 and 2 = Ø7mm
At constant throttle settings

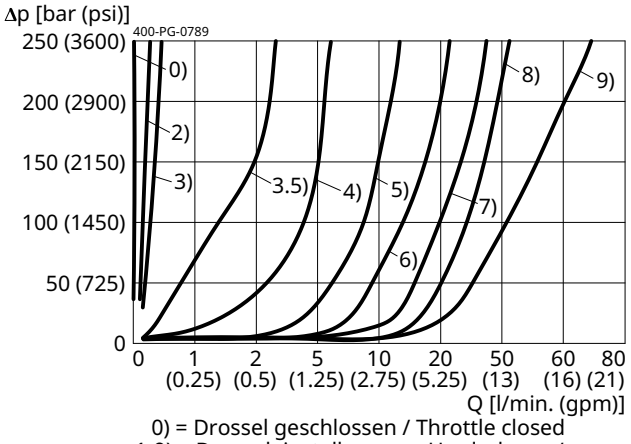

0) = Drossel geschlossen / Throttle closed
1-9) = Drosseleinstellung pro Umdrehung / Throttle setting per revolution

WWW.SUMY.IR

Dimensions and sectional view

Beispiel für die Masseinheit:
Exampel for the dimensional units:

0.79	= 0.79 mm	millimeter
(.031)	= 0.031"	inch

Version "S": Einstellschraube mit Innensechskant (Standard)
Version "S": adjustment screw with internal hexagon (standard)

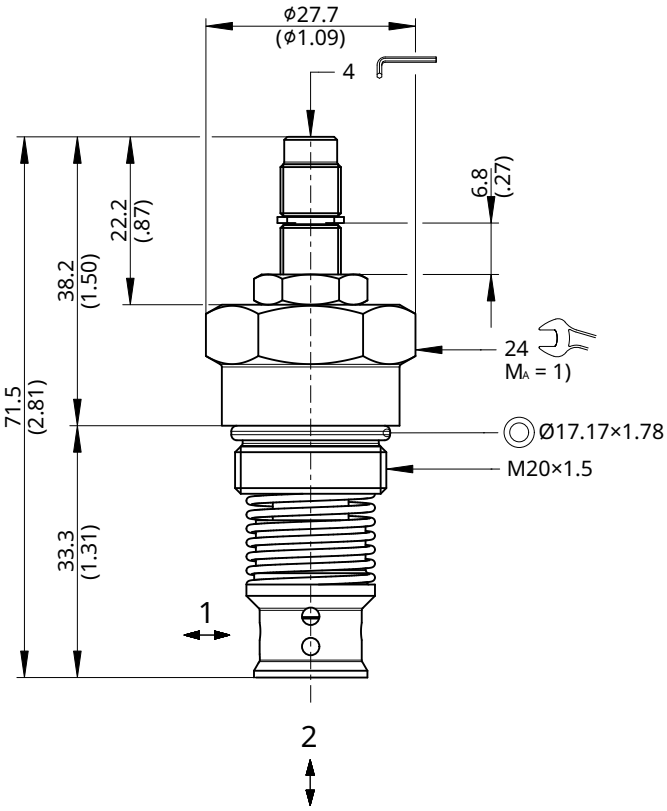

Version "H": Einstellschraube mit Handrad
Version "H": adjustment screw with handknob

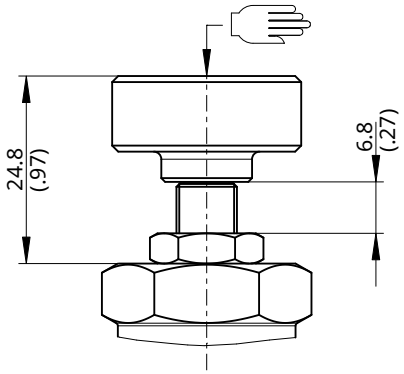

Installation information

ATTENTION!
Only qualified personnel with mechanical skills may carry out any maintenance work. Generally, the only work that should ever be undertaken is to check, and possibly replace, the seals. When changing seals, oil or grease the new seals thoroughly before fitting them.

IMPORTANT!
1) When fitting the screw-in cartridge valve, use the specified tightening torque. The value can be found in the chapter "Technical data".

NOTE!
The seals are not available individually. The seal kit order number can be found in the chapter "Technical data".

BUCHER hydraulics
WWW.SUMY.IR

Ordering code

Ex. M D R 2 - 6 F - 0.7 - S _ - N A 1

M	=	flow-regulating valve	
D	=	direct acting	
R	=	check valve function	
2	=	2-way/2-position function	
6	=	nominal size 6	
F	=	cavity type DF	
0.7	=	Check valve opening pressure 0.7 bar / 10 psi	
S	=	adjustment screw with internal hexagon	(standard)
H	=	adjustment screw with handknob	
(blank)	=	adjustment, normal opening	(standard)
F	=	adjustment, fine opening	
N	=	NBR (nitril-butadien-rubber / BUNA) seals	(standard)
V	=	FKM (fluorocarbon rubber / VITON) seals (special seals on request)	
A ... Q	=	standard model according to valid data sheet	
Z ... R	=	special model (on request)	
1 ... 9	=	technical design no. (omit by ordering)	

Related data sheets

Reference	Description
400-P-040011	Form tools
400-P-060131	Cavity DF

info.ch@bucherhydraulics.com **www.bucherhydraulics.com**

© 2025 by Bucher Hydraulics AG Frutigen, 3714 Frutigen, Switzerland

All rights reserved.
Data is provided for the purpose of product description only, and must not be construed as warranted characteristics in the legal sense. The information does not relieve users from the duty of conducting their own evaluations and tests. Because the products are subject to continual improvement, we reserve the right to amend the product specifications contained in this catalogue.

BUCHER hydraulics
WWW.SUMY.IR

Flow valve
Throttle check valve

Q_{max} = 160 l/min, p_{max} = 350 bar
direct acting, spool type, mechanically adjustable
Type series: MDR2-10F-...-A

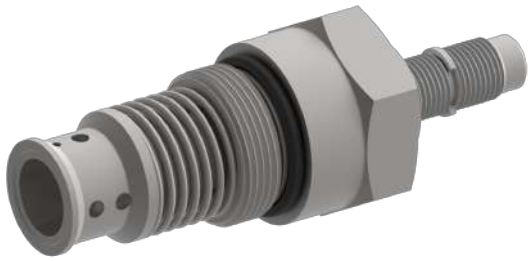

- Screw-in cartridge valve
- For cavity DF
- All external parts with zinc-nickel plating according to DIN EN ISO 19598
- Same cavity for NG6 and NG10
- Self-locking adjustment spindle with lock nut
- Self-cleaning throttle point

Description

Series MDR2-... throttle check valves are size 10 screw-in units with an M20 x 1.5 mounting thread. They are designed as semi-cartridges and have an integral bypass check valve. The flow rate in direction 1 to 2 can be adjusted using the adjusting screw. In flow direction 2 to 1, the throttle function is bypassed because the flow passes through the check valve. The valve design ensures automatic self-cleaning during reverse flow. All external parts of the screw-in valve are zinc-nickel plated and are thus suitable for use in the harshest operating environments. These 2-way flow control cartridges are used in mobile and industrial applications. If you intend to manufacture your own cavities, please refer to the section "Related data sheets".

Symbol

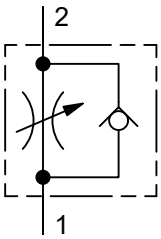

WWW.SUMY.IR

Technical data

General characteristics	Description, value, unit
Function group	Flow valve
Function	Throttle check valve
Design	Screw-in cartridge valve
Controls	mechanically adjustable
Characteristic	direct acting, spool type
Construction size	NG 10
Thread size	M20×1,5
Mounting attitude	unrestricted
Weight	0.18 kg
Cavity acc. factory standard	For cavity DF
Tightening torque steel	50 Nm
Tightening torque aluminium	50 Nm
Tightening torque tolerance	± 10 %
Minimum ambient temperature	- 30 °C
Maximum ambient temperature	+ 80 °C
Surface protection	All external parts with zinc-nickel plating according to DIN EN ISO 19598
Sealing material	see ordering code
Seal kit order number	NBR: DS-546-N / FKM: DS-546-V

Hydraulic characteristics	Description, value, unit
Maximum operating pressure	350 bar
Maximum flow rate	160 l/min
Restriction of the flow rate	NG 6 = 80 l/min
Flow direction	see symbol
Hydraulic fluid	mineral-based or synthetics with lubricating properties. HL and HLP mineral oil according to DIN 51 524; other fluids on request!
Minimum fluid temperature	- 30 °C
Maximum fluid temperature	+ 80 °C
Viscosity range	10 ... 500 mm^2/s (cSt)
Recommended viscosity range	15 ... 250 mm^2/s (cSt)
Minimum fluid cleanliness (cleanlineless class according to ISO 4406:1999)	class 20/18/15
Definition of cracking pressure for check valve	0,7

WWW.SUMY.IR

Performance graphs

measured with oil viscosity 33.0 mm²/s (cSt)

p = f (Q) Pressure-flow rate

Measured via check valve

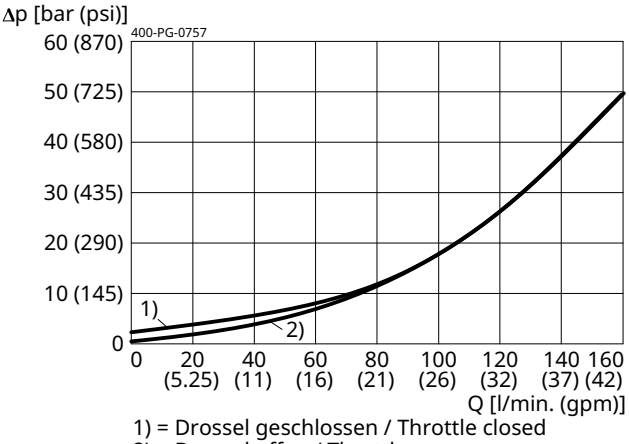

1) = Drossel geschlossen / Throttle closed
2) = Drossel offen / Throttle open

Q = f (I:Δp) Flow rate adjustment

Measured with supply channel 1 and 2 = Ø10mmAt constant throttle settings

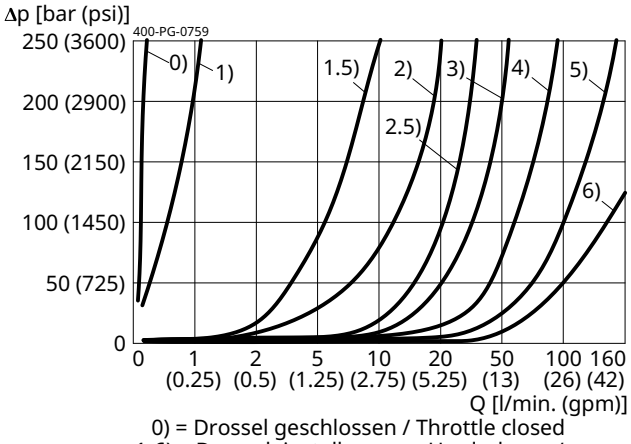

0) = Drossel geschlossen / Throttle closed
1-6) = Drosseleinstellung pro Umdrehung / Throttle setting per revolution

WWW.SUMY.IR

Dimensions and sectional view

Beispiel für die Masseinheit:
Exampel for the dimensional units:

0.79	= 0.79 mm	millimeter
(.031)	= 0.031"	inch

Version "S": Einstellschraube mit Innensechskant (Standard)
Version "S": adjustment screw with internal hexagon (standard)

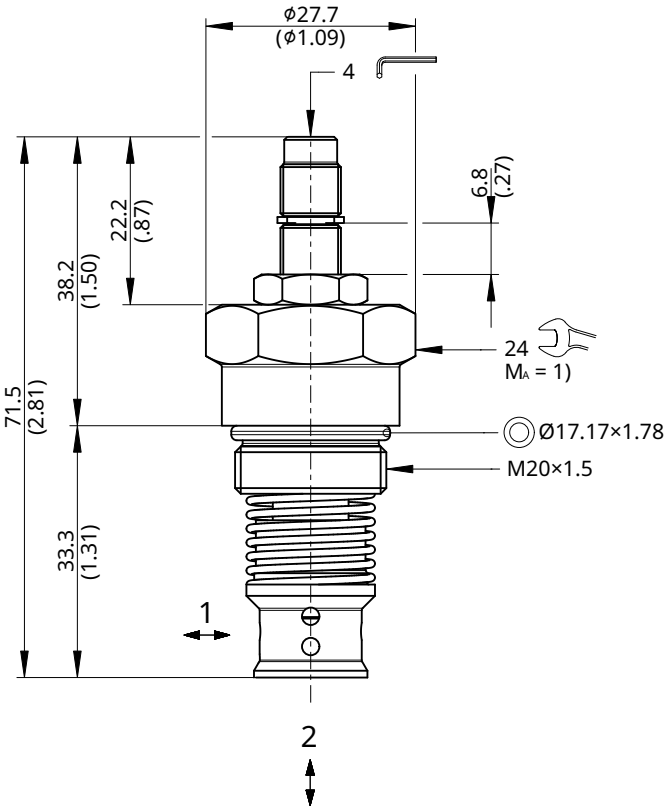

Version "H": Einstellschraube mit Handrad
Version "H": adjustment screw with handknob

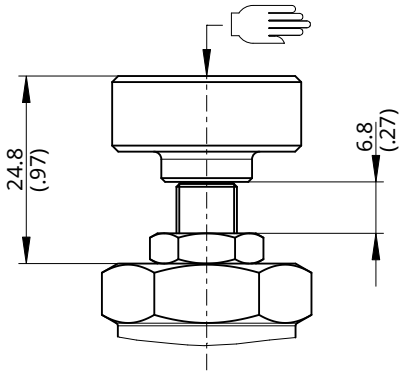

Installation information

ATTENTION!
Only qualified personnel with mechanical skills may carry out any maintenance work. Generally, the only work that should ever be undertaken is to check, and possibly replace, the seals. When changing seals, oil or grease the new seals thoroughly before fitting them.

IMPORTANT!
1) When fitting the screw-in cartridge valve, use the specified tightening torque. The value can be found in the chapter "Technical data".

NOTE!
The seals are not available individually. The seal kit order number can be found in the chapter "Technical data".

WWW.SUMY.IR

Ordering code

Ex. M D R 2 - 10 F - 0.7 - S - N A 1

M	=	flow-regulating valve
D	=	direct acting
R	=	check valve function
2	=	2-way/2-position function
10	=	nominal size 10
F	=	cavity type DF
0.7	=	Check valve opening pressure 0.7 bar / 10psi
S	=	adjustment screw with internal hexagon (standard)
H	=	adjustment screw with handknob
N	=	NBR (nitril-butadien-rubber / BUNA) seals (standard)
V	=	FKM (fluorocarbon rubber / VITON) seals (special seals on request)
A ... Q	=	standard model according to valid data sheet
Z ... R	=	special model (on request)
1 ... 9	=	technical design no. (omit by ordering)

Related data sheets

Reference	Description
400-P-040011	Form tools
400-P-060131	Cavity DF

info.ch@bucherhydraulics.com **www.bucherhydraulics.com**

© 2025 by Bucher Hydraulics AG Frutigen, 3714 Frutigen, Switzerland

All rights reserved.
Data is provided for the purpose of product description only, and must not be construed as warranted characteristics in the legal sense. The information does not relieve users from the duty of conducting their own evaluations and tests. Because the products are subject to continual improvement, we reserve the right to amend the product specifications contained in this catalogue.

BUCHER hydraulics

FLOW CONTROL VALVE PRESSURE COMPENSATED, FIXED ORIFICE, RESTRICTIVE TYPE

WWW.SUMY.IR

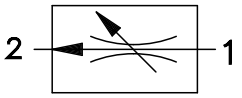

TORQUE:
Steel = 35/40 Ft–Lb. [47/54 Nm]
Aluminum = 25/30 Ft–Lb. [34/41 Nm]

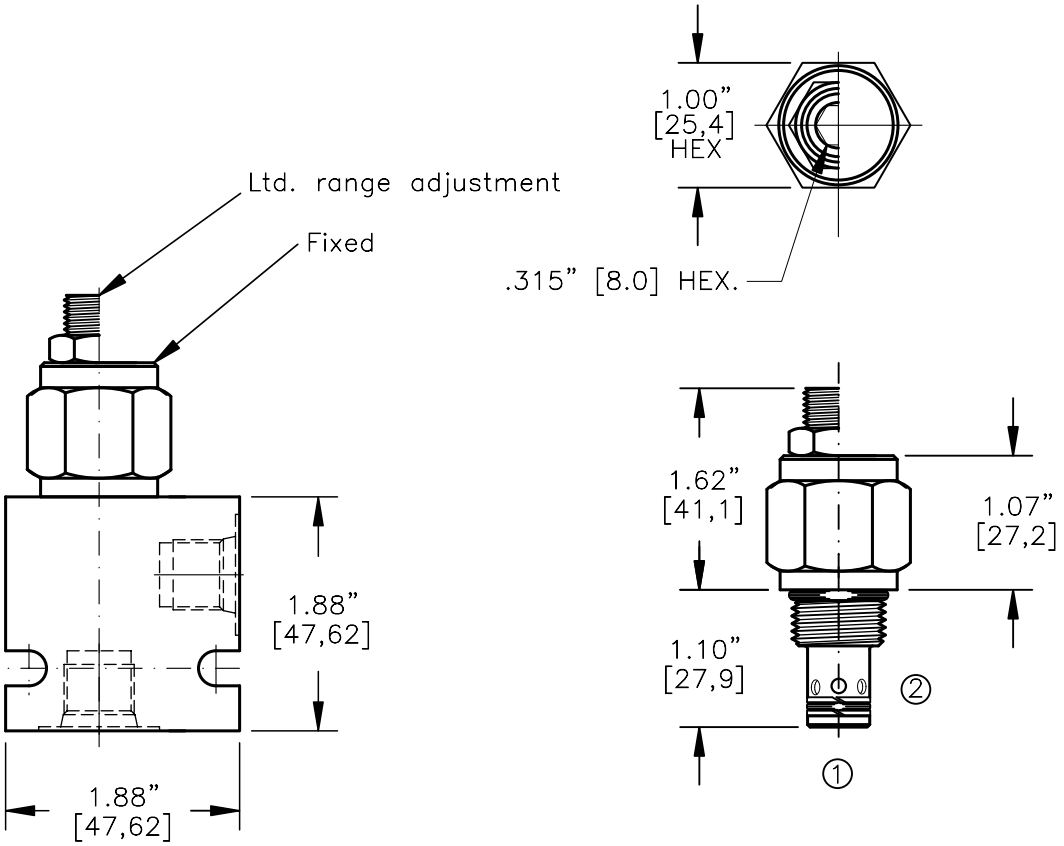

FOR ALUMINUM OR STEEL VALVE HOUSING CONFIGURATIONS SEE PAGE 0–011.1

PCFC–08–X–X–X–XX

BASIC

SIZE
08 = 3/4"–16 UNF

SEALS
N = BUNA "N"
V = VITON

ADJUSTMENT
F = FIXED (FACTORY SET)
S = ADJUSTING SCREW
C = CAPPED
T = TAMPERPROOF
K = HANDKNOB
M = METAL HANDKNOB

PORTS
0 = CARTRIDGE ONLY
02BX = G 1/4" BSPP
06TX = SAE – #6

"A" – ALUM. HOUSING
"S" – STEEL HOUSING

REGULATED FLOW TO BE SPECIFIED
EXAMPLE
1.5=1.5 GPM (5,7l/m)

FOR ADJUSTMENT CONTROL OPTIONS SEE PAGE 0–050.0

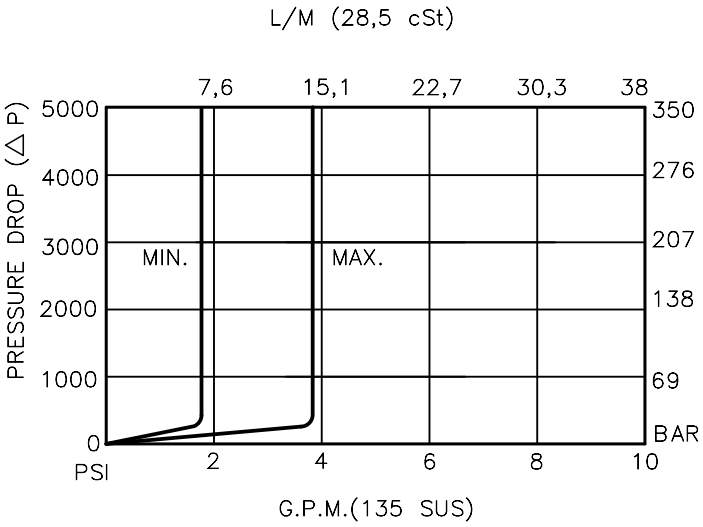

BUCHER hydraulics

WWW.SUMY.IR

FLOW CONTROL VALVE PRESSURE COMPENSATED, FIXED ORIFICE, RESTRICTIVE TYPE.

DESCRIPTION – FIXED

This unit is a SCREW IN, cartridge type, pressure compensated, fixed orifice, restrictive hydraulic flow control valve.
FLOW RANGE: 0.2 TO 4.0 GPM [0,8 TO 15,1 L

DESCRIPTION – ADJUSTABLE

This unit is a SCREW IN, cartridge type, pressure compensated, fixed orifice, 30% flow adjustment, restrictive hydraulic flow control valve.
FLOW RANGE: 0.2 TO 6.0 GPM [0,8 TO 22,7 L
Flow adjustment under pressure is difficult.

OPERATIONS

Valve maintains constant flow from port 1 to 2 regardless of system pressure or load and non-compensated flow from port 2 to 1 and goes thru the control orifice.

FEATURES AND BENEFITS

Valve is available with a screw, tamperproof, capped or knob adjustment.
All external carbon steel parts are plated for longer life against the elements.
All cartridge valves are 100% functionally tested.
Industry common cavity.

SPECIFICATIONS

OPERATING PRESSURE: 5,000 PSI (350 Bar)
PROOF PRESSURE: 10,000 PSI (700 Bar)
FLOW:0.2 to 6.0 GPM [0,8 to 22,7 l/m] nominal. See performance chart.
FLOW ACCURACY:
0.2 to 1.5 GPM [0,9 to 6,0 L??– 10.0%
1.5 to 6.0 GPM [6,0 to 22,7 L??– 7.5%
VALVE HOUSINGS: 2500 PSI [175 Bar] = Aluminum – Anodized.
5000 PSI [350 Bar] = Steel – Unplated.
OPERATING TEMPERATURE: –40° to +250° F. [–40° to +120° C.]
OPERATING MEDIA: All general purpose hydraulic fluids such as MIL–H–5606, SAE–#10, SAE–#20, etc.
INSTALLATION: No restrictions.
SEAL KIT: SKN–0822 Buna "N".
SKV–0822 Viton.
WEIGHT: .26 lb [.12 kg] cartridge only.
VALVE CAVITY: #C0820, See Page 0–011.0.

info.el@bucherhydraulics.com www.bucherhydraulics.com/commoncavity

© 2015 by Bucher Hydraulics, Inc., 2545 Northwest Parkway, Elgin, Illinois 60124, USA
All rights reserved.
Data is provided for the purpose of product description only, and must not be construed as warranted characteristics in the legal sense. The information does not relieve users from the duty of conducting their own evaluations and tests. Because the products are subject to continual improvement, we reserve the right to amend the product specifications contained in this catalogue.

BUCHER hydraulics

FLOW CONTROL VALVE PRESSURE COMPENSATED, FIXED ORIFICE, RESTRICTIVE TYPE.

WWW.SUMY.IR

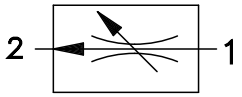

TORQUE:
Steel = 55/60 Ft–Lb. [74/81 Nm]
Aluminum = 35/40 Ft–Lb. [47/54 Nm]

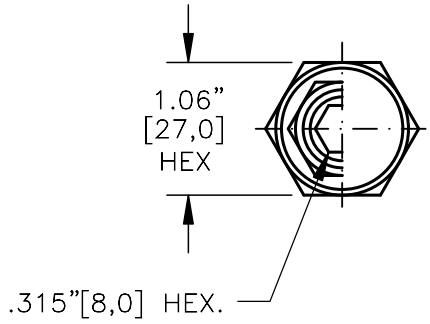

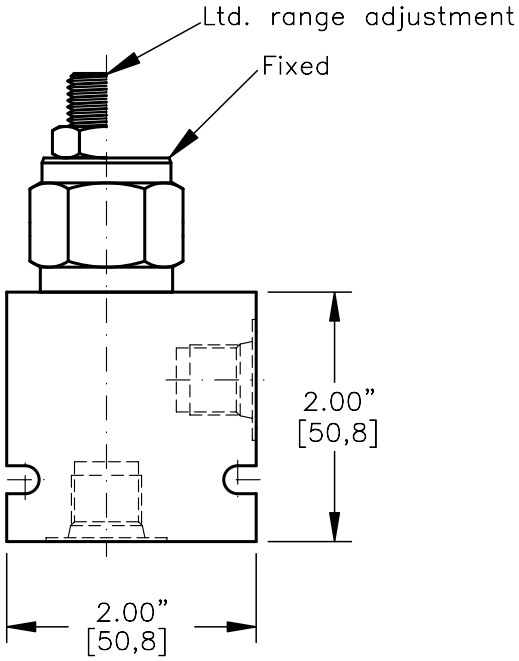

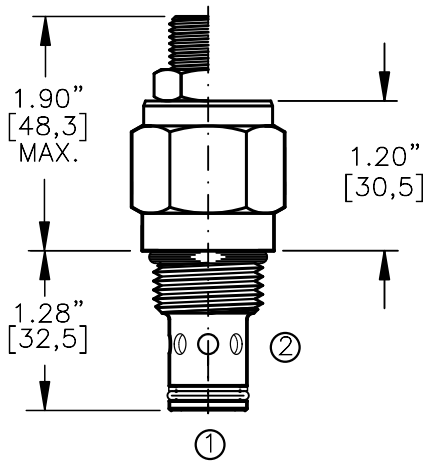

FOR ALUMINUM OR STEEL VALVE HOUSING CONFIGURATIONS SEE PAGE 0–012.1

PCFC–10–X–X–X–XX

BASIC

SIZE
10 = 7/8"–14 UNF

SEALS
N = BUNA "N"
V = VITON

ADJUSTMENT
F = FIXED (FACTORY SET)
S = ADJUSTING SCREW
C = CAPPED
T = TAMPERPROOF
K = HANDKNOB
M = METAL HANDKNOB

FOR ADJUSTMENT CONTROL OPTIONS SEE PAGE 0–050.0

PORTS
0 = CARTRIDGE ONLY
02BX = G 1/4" BSPP
03BX = G 3/8" BSPP
06TX = SAE – #6
08TX = SAE – #8
"A" – ALUM. HOUSING
"S" – STEEL HOUSING

REGULATED FLOW TO BE SPECIFIED
EXAMPLE
1.5=1.5 GPM (5,7l/m)

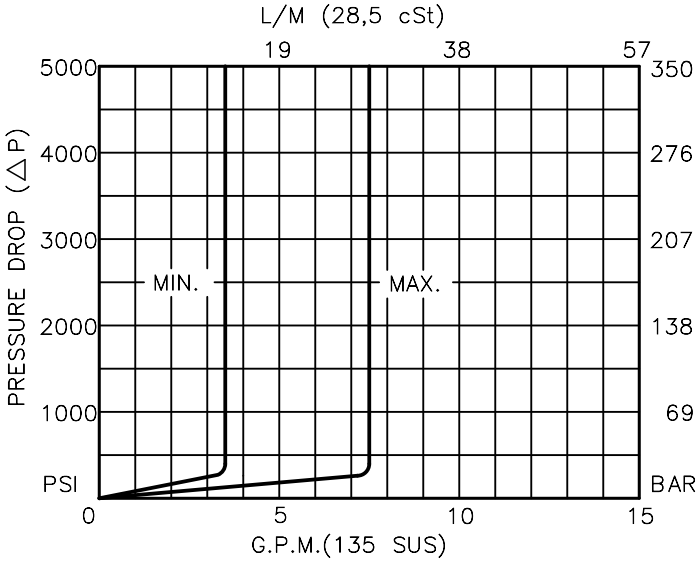

BUCHER hydraulics

WWW.SUMY.IR

FLOW CONTROL VALVE PRESSURE COMPENSATED, FIXED ORIFICE, RESTRICTIVE TYPE.

DESCRIPTION – FIXED

This unit is a SCREW IN, cartridge type, pressure compensated, fixed orifice, restrictive hydraulicflow control valve.
FLOW RANGE: 0.2 TO 8.0 GPM [0,8 TO 30,0 L

DESCRIPTION – ADJUSTABLE

This unit is a SCREW IN, cartridge type, pressure compensated, fixed orifice, 30% flow adjustment, restrictive hydraulic flow control valve.
FLOW RANGE: 0.2 TO 12.0 GPM [0,8 TO 45,0 L
Flow adjustment under pressure is difficult.

OPERATIONS

Valve maintains constant flow from port 1 to 2 regardless of system pressure or load and non-compensated flow from port 2 to 1 and goes thru the control orifice.

FEATURES AND BENEFITS

Valve is available with a screw, tamperproof, capped or knob adjustment.
All external carbon steel parts are plated for longer life against the elements.
All cartridge valves are 100% functionally tested.
Industry common cavity.

SPECIFICATIONS

OPERATING PRESSURE: 5,000 PSI (350 Bar)
PROOF PRESSURE: 10,000 PSI (700 Bar)
FLOW:0.2 to 12.0 GPM [0,8 to 45,0 l/m] nominal. See performance chart.
FLOW ACCURACY:
0.2 to 1.5 GPM [0,9 to 6,0 L??– 10.0%
1.5 to 4.0 GPM [6,0 to 15,0 L??– 7.5%
4.0 to 12.0 GPM [15,0 to 45,0 L??– 5.0%
VALVE HOUSINGS: 2500 PSI [175 Bar] = Aluminum – Anodized.
5000 PSI [350 Bar] = Steel – Unplated.
OPERATING TEMPERATURE: –40° to +250° F. [–40° to +120° C.]
OPERATING MEDIA: All general purpose hydraulic fluids such as MIL–H–5606, SAE–#10, SAE–#20, etc.
INSTALLATION: No restrictions.
SEAL KIT: SKN–1021 Buna "N".
SKV–1021 Viton.
WEIGHT: .38 lb [.17 kg] cartridge only.
VALVE CAVITY: #C1020, See Page 0–012.0.

info.el@bucherhydraulics.com

www.bucherhydraulics.com/commoncavity

© 2015 by Bucher Hydraulics, Inc., 2545 Northwest Parkway, Elgin, Illinois 60124, USA
All rights reserved.
Data is provided for the purpose of product description only, and must not be construed as warranted characteristics in the legal sense. The information does not relieve users from the duty of conducting their own evaluations and tests. Because the products are subject to continual improvement, we reserve the right to amend the product specifications contained in this catalogue.

BUCHER hydraulics

FLOW CONTROL VALVE PRESSURE COMPENSATED, FIXED ORIFICE, RESTRICTIVE TYPE.

WWW.SUMY.IR

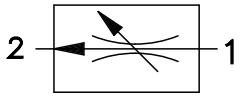

TORQUE:
Steel = 70/75 Ft–Lb. [95/102 Nm]
Aluminum = 55/60 Ft–Lb. [74/81 Nm]

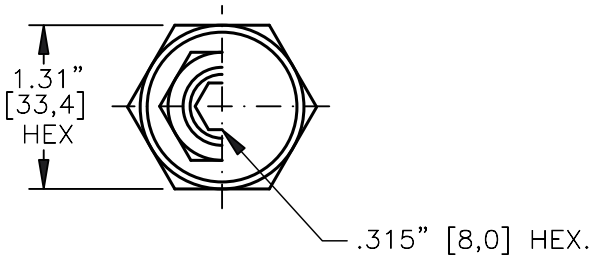

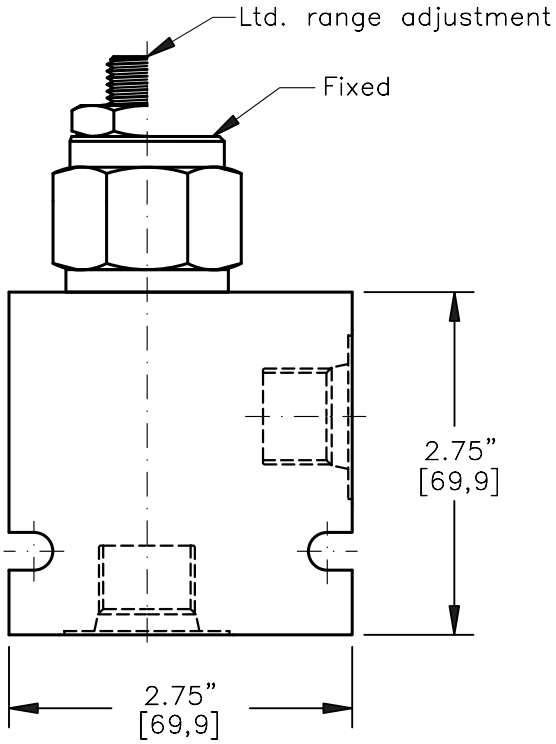

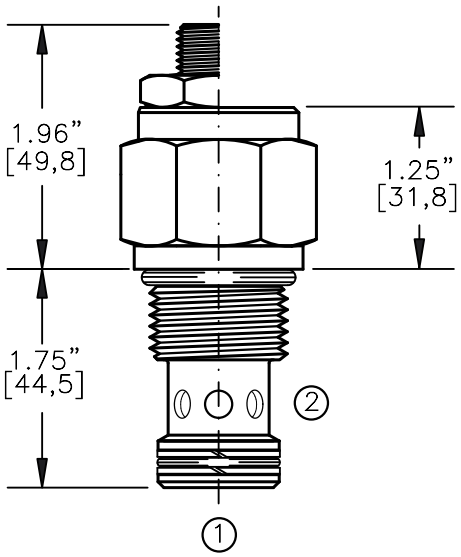

FOR ALUMINUM OR STEEL VALVE HOUSING CONFIGURATIONS SEE PAGE 0–013.1

PCFC–12–X–X–X–XX

BASIC

SIZE
12 = 1.062"–12UNF

SEALS
N = BUNA "N"
V = VITON

ADJUSTMENT
F = FIXED (FACTORY SET)
S = ADJUSTING SCREW
C = CAPPED
T = TAMPERPROOF

PORTS
0 = CARTRIDGE ONLY
04BX = G 1/2" BSPP
06BX = G 3/4" BSPP
10TX = SAE – #10
12TX = SAE – #12
"A" – ALUM. HOUSING
"S" – STEEL HOUSING

REGULATED FLOW TO BE SPECIFIED
EXAMPLE
1.5=1.5 GPM (5,7l/m)

FOR ADJUSTMENT CONTROL OPTIONS SEE PAGE 0–050.0

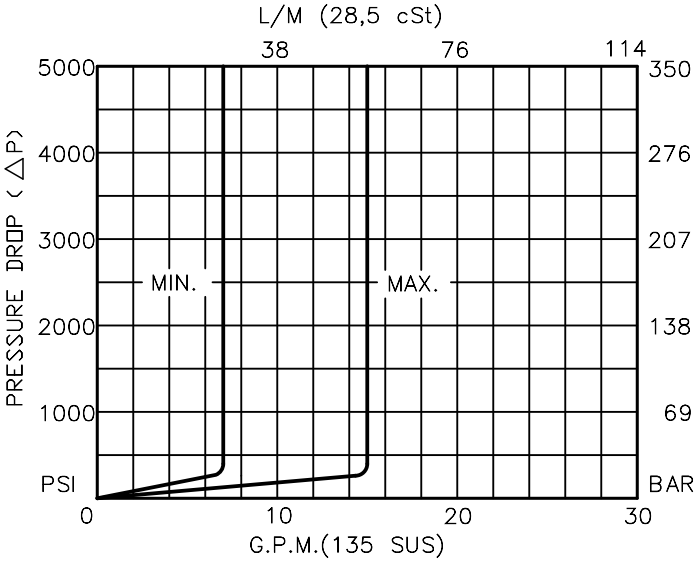

BUCHER hydraulics

WWW.SUMY.IR

FLOW CONTROL VALVE PRESSURE COMPENSATED, FIXED ORIFICE, RESTRICTIVE TYPE.

DESCRIPTION – FIXED

This unit is a SCREW IN, cartridge type, pressure compensated, fixed orifice, restrictive hydraulic flow control valve.
FLOW RANGE: 0.2 TO 16.0 GPM [0,8 TO 60,0 L

DESCRIPTION – ADJUSTABLE

This unit is a SCREW IN, cartridge type, pressure compensated, fixed orifice, 30% flow adjustment, restrictive hydraulic flow control valve.
FLOW RANGE: 0.2 TO 24.0 GPM [0,8 TO 90,0 L
Flow adjustment under pressure is difficult.

OPERATIONS

Valve maintains constant flow from port 1 to 2 regardless of system pressure or load and non–compensated flow from port 2 to 1 and goes thru the control orifice.

FEATURES AND BENEFITS

Valve is available with a screw, tamperproof, capped or knob adjustment.
All external carbon steel parts are plated for longer life against the elements.
All cartridge valves are 100% functionally tested.
Industry common cavity.

SPECIFICATIONS

OPERATING PRESSURE: 5,000 PSI (350 Bar)
PROOF PRESSURE: 10,000 PSI (700 Bar)
FLOW:0.2 to 24.0 GPM [0,8 to 90,0 l/m] nominal. See performance chart.
FLOW ACCURACY:
0.2 to 3.0 GPM [0,9 to 12,0 L??– 10.0%
3.0 to 8.0 GPM [12,0 to 30,0 L??– 7.5%
8.0 to 24.0 GPM [30,0 to 90,0 L??– 5.0%
VALVE HOUSINGS: 2500 PSI [175 Bar] = Aluminum – Anodized.
5000 PSI [350 Bar] = Steel – Unplated.
OPERATING TEMPERATURE: –40° to +250° F. [–40° to +120° C.]
OPERATING MEDIA: All general purpose hydraulic fluids such as MIL–H–5606, SAE–#10, SAE–#20, etc.
INSTALLATION: No restrictions.
SEAL KIT: SKN–1222 Buna "N".
SKV–1222 Viton.
WEIGHT: .38 lb [.17 kg] cartridge only.
VALVE CAVITY: #C1220, See Page 0–013.0.

info.el@bucherhydraulics.com

www.bucherhydraulics.com/commoncavity

© 2015 by Bucher Hydraulics, Inc., 2545 Northwest Parkway, Elgin, Illinois 60124, USA
All rights reserved.
Data is provided for the purpose of product description only, and must not be construed as warranted characteristics in the legal sense. The information does not relieve users from the duty of conducting their own evaluations and tests. Because the products are subject to continual improvement, we reserve the right to amend the product specifications contained in this catalogue.

BUCHER hydraulics
WWW.SUMY.IR

General information
Cavity

Type series: GB

Dimensions and sectional view

Beispiel für die Masseinheit:
Example for the dimensional units:
0.79 = 0.79 mm millimeter

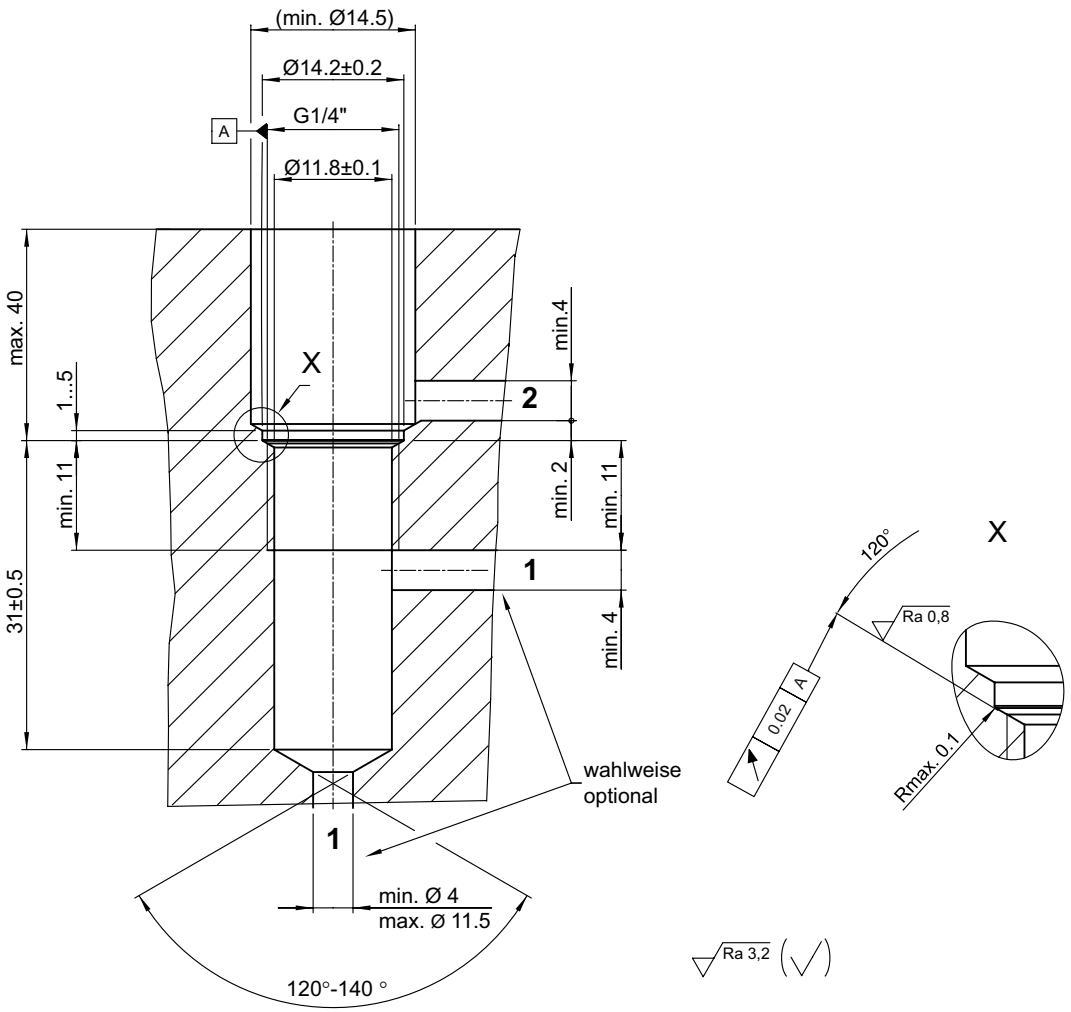

Installation information

ATTENTION!
You must maintain the specified positional and diametral tolerances. To ensure trouble-free operation of the screw-in cartridges, we strongly recommend that pilot drilling, boring, reaming and cavity thread-cutting are always performed in one setup.

IMPORTANT!
We offer form tool sets for sale or hire. For further information, see data sheet 400-P-040011.

NOTE!
Cavity type to factory standard.

ATTENTION!
It is essential that the G1/4" thread be cut with a tap. Thread milling is not permitted, because the circular interpolation can produce unacceptable roundness errors.

info.ch@bucherhydraulics.com **www.bucherhydraulics.com**

© 2023 by Bucher Hydraulics AG Frutigen, 3714 Frutigen, Switzerland

All rights reserved.
Data is provided for the purpose of product description only, and must not be construed as warranted characteristics in the legal sense. The information does not relieve users from the duty of conducting their own evaluations and tests. Because the products are subject to continual improvement, we reserve the right to amend the product specifications contained in this catalogue.

2-Way Flow-Control Cartridge, Size 1

Q_{max} = 5 l/min, p_{max} = 250 bar
With fixed orifice, load compensated
Series MRPA-2-1…

- Load-independent flow rate
- Compact design for cavity type GB – G ¼“ to Bucher standards
- Various fixed orifices (optimum integration in system)
- Exceptionally constant flow rate over the entire pressure range
- Very good reproducibility
- Can be used for LS-unloading
- Minimal wear and long service life

1 Description

Series MRPA… 2-way flow-control valves are size 1, high performance, load-compensated screw-in cartridges with a G ¼” mounting thread. By means of a fixed orifice, the flow rate to an actuator is kept constant regardless of load changes. The load compensation is done by the pressure-compensator piston, which maintains the pressure drop across the fixed orifice at a constant level. The flow-control cartridges can be supplied with various fixed orifices for optimum integration in the system. These 2-way flow-control cartridges are used for meter-in or meter-out flow-control circuits where flow rates must be kept constant regardless of pressure changes.

2 Symbol

Simplified

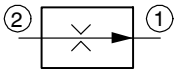

Detailed

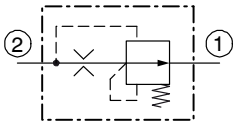

3 Technical data

General characteristics	Description, value, unit
Designation	2-way flow-control cartridge
Design	with fixed orifice, load compensated
Mounting method	screw-in cartridge G ¼“
Tightening torque	15 Nm ± 10 %
Size	nominal size 1 mm, cavity type GB to Bucher standards
Weight	0.018 kg
Mounting attitude	unrestricted
Ambient temperature range	-25 °C … +80 °C
$MTTF_D$ values	150 years, see data sheet 400-P-010101-en

Hydraulic characteristics	Description, value, unit
Maximum operating pressure	250 bar
Maximum flow rate	5 l/min

Hydraulic characteristics	Description, value, unit
Hysteresis Nominal	± 10 %
Nominal flow rate Q_N is constant (fixed orifice):	5.0 l/min ± 10 %, 4.0 l/min ± 10 %, 2.5 l/min ± 10 %, 1.0 l/min ± 10 % other flow rates - please consult BUCHER
Flow direction	2 → 1, see symbol / **Note:** 1 → 2 is not permitted!
Hydraulic fluid	HL and HLP mineral oil to DIN 51 524; for other fluids, please contact BUCHER
Hydraulic fluid temperature range	-25 °C … +80 °C
Viscosity range	10…650 mm^2/s (cSt), recommended 15...250 mm^2/s (cSt)
Minimum fluid cleanliness Cleanliness class to ISO 4406 : 1999	class 20/18/15

4 Performance graphs

measured with oil viscosity 33 mm^2/s (cSt)

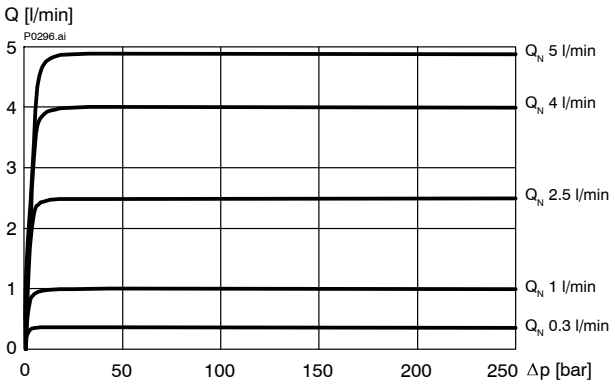

Q = f (Δp) Flow-rate adjustment characteristic

5 Dimensions & sectional view

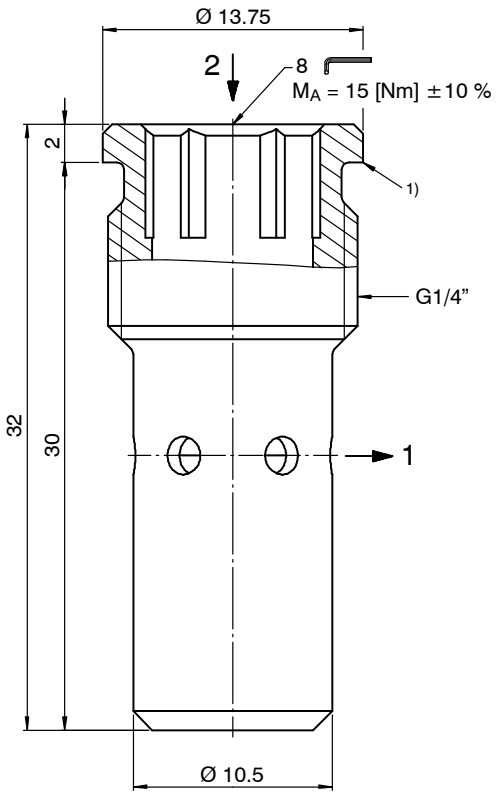

IMPORTANT!

1) The cutting edge guarantees leak-free sealing (metal-to-metal) from port 2 to 1.

6 Installation information

IMPORTANT!
When fitting the cartridges, use the specified tightening torque. No adjustments are necessary, since the cartridges are fitted with the required fixed orifice in the factory.

ATTENTION!
Only qualified personnel with mechanical skills may carry out any maintenance work. Generally, the only work that should ever be undertaken is to check, and possibly replace, the seals. When changing seals, oil or grease the new seals thoroughly before fitting them.

7 Ordering code

Ex. M R P A - 2 - 1 - 50 - _

M	=	flow valve
R	=	flow-control valve
P	=	screw-in cartridge G ¼“
A ... Q	=	standard model - see relevant data sheets
Z ... R	=	special features - please consult BUCHER
2	=	2-way model
1	=	nominal size 1
		nominal flow rate Q_N is constant:
50	=	5,0 l/min
40	=	4,0 l/min
25	=	2,5 l/min
10	=	1,0 l/min
		other flow rates - please consult BUCHER [2)]
1 ... 9	=	design stage (omit when ordering new units)

IMPORTANT!
[2)] With a nominal flow less than 1 l/min, the variation and the hysteresis together can be significantly above 10 %.

8 Related data sheets

Reference	(Old no.)	Description
400-P-040011	(i-32)	The form-tool hire programme
400-P-040311		Cavity type GB to Bucher standards
400-P-010101		$MTTF_D$ values for hydraulic valves

info.ch@bucherhydraulics.com www.bucherhydraulics.com

© 2020 by Bucher Hydraulics AG Frutigen, CH-3714 Frutigen
All rights reserved.
Data is provided for the purpose of product description only, and must not be construed as warranted characteristics in the legal sense. The information does not relieve users from the duty of conducting their own evaluations and tests. Because the products are subject to continual improvement, we reserve the right to amend the product specifications contained in this catalogue.

Classification: 430.300.330.305.300

BUCHER hydraulics
WWW.SUMY.IR

General information
Cavity

Type series: ER

Dimensions and sectional view

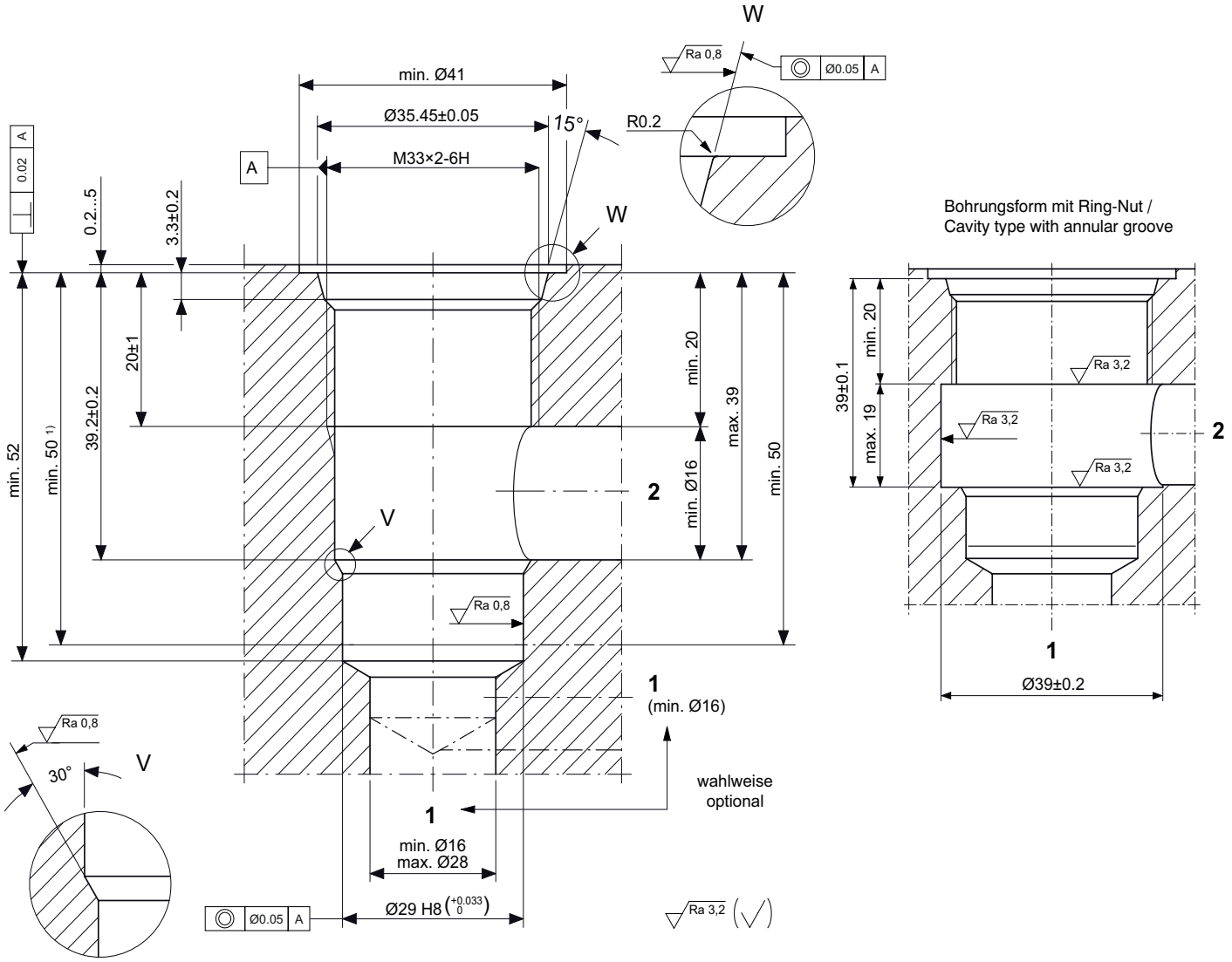

HINWEIS!
NOTE!

1) Passungstiefe
Minimum depth of specified diametral tolerance

Beispiel für die Masseinheit:
Example for the dimensional units:
0.79 = 0.79 mm millimeter

Installation information

ATTENTION!
You must maintain the specified positional and diametral tolerances. To ensure trouble-free operation of the screw-in cartridges, we strongly recommend that pilot drilling, boring, reaming and cavity thread-cutting are always performed in one setup.

NOTE!
The cavity type ER complies with the standard according to ISO 7789: 33-01-0-07.

ATTENTION!
For improved Δp values with directional and logic valves, use the cavity with an annular groove in the 2 stage.

NOTE!
We offer form tool sets for sale or hire. For further information, see data sheet 400-P-040011.

info.ch@bucherhydraulics.com **www.bucherhydraulics.com**

© 2023 by Bucher Hydraulics AG Frutigen, 3714 Frutigen, Switzerland

All rights reserved.
Data is provided for the purpose of product description only, and must not be construed as warranted characteristics in the legal sense. The information does not relieve users from the duty of conducting their own evaluations and tests. Because the products are subject to continual improvement, we reserve the right to amend the product specifications contained in this catalogue.

2-Way Flow-Control Cartridge, Size 10

Q_{max} = 120 l/min, p_{max} = 350 bar
With fixed orifice, load compensated, adjustable compensator spring
Series MRPA-2-10…

- Load-independent flow rate
- Compact design for cavity type ER – M33 x 2 to ISO 7789-33-01-0-07
- Various flow-rate control ranges
- Optimum integration in system thanks to adjustable pressure-compensator spring
- Reliable operation over the whole pressure and flow range (even with high pressure differentials)
- Available with hand-knob or tamper-proof cap
- All exposed parts with zinc-nickel plating
- Can be fitted in a line-mounting body

1 Description

Series MRPA… 2-way flow-control valves are size 10, high performance, load-compensated screw-in cartridges with an M33 x 2 mounting thread. By means of a fixed orifice and an integral pressure-compensator function, the flow rate to an actuator is kept constant regardless of load changes. The load compensation is done by the pressure-compensator piston, which maintains the pressure drop across the fixed orifice at a constant level. The flow-control cartridges can be supplied with various fixed orifices that determine the flow-control range. Using the adjustable pressure-compensator spring, the required flow rate (the range depends on the fixed orifice) is adjusted built in the system. The spring is adjusted by means of an adjusting screw or a hand-knob. To safeguard valve settings, the adjusting spindle can be sealed with a tamper-proof cap. These 2-way flow-control cartridges are used in in mobile and industrial applications where a constant flow rate must be maintained under conditions of varying load. All external parts of the cartridge are zinc-nickel plated to DIN 50 979 and are thus suitable for use in the harshest operating environments. If you intend to manufacture your own cavities or are designing a line-mounting installation, please refer to the section “Related data sheets”.

2 Symbol

Simplified

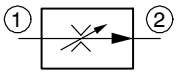

Detailed

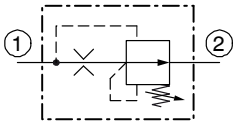

3 Technical data

General characteristics	Description, value, unit
Designation	2-way flow-control
Design	with fixed orifice, load compensated, adjustable compensator spring, with mechanical operation
Mounting method	screw-in cartridge M33 x 2
Tightening torque	150 Nm ± 10 %
Size	nominal size 10 mm, cavity type ER to ISO 7789-33-01-0-07
Weight	0.55 kg
Mounting attitude	unrestricted

WWW.SUMY.IR

General characteristics	Description, value, unit
Ambient temperature range	-25 °C … +80 °C
$MTTF_D$ values	150 years, see data sheet 400-P-010101-en

Hydraulic characteristics	Description, value, unit
Maximum operating pressure	350 bar
Maximum flow rate	120 l/min
Nominal flow rate Q_N	120, 105, 85, 70, 60, 50 l/min
Flow direction	1 → 2, see symbols
Hydraulic fluid	HL and HLP mineral oil to DIN 51 524; for other fluids, please contact BUCHER
Hydraulic fluid temperature range	-25 °C … +80 °C
Viscosity range	10…650 mm^2/s (cSt), recommended 15...250 mm^2/s (cSt)
Minimum fluid cleanliness Cleanliness class to ISO 4406 : 1999	class 20/18/15

4 Performance graphs

measured with oil viscosity 33 mm^2/s (cSt)

Q = f (Δp) Flow-rate adjust. characteristic [Q_N = 50 l/min]

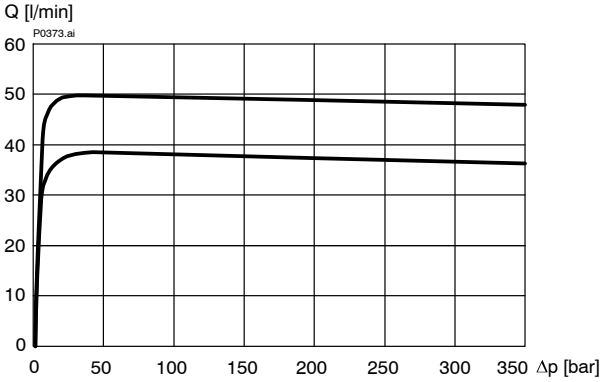

Q = f (Δp) Flow-rate adjust. characteristic [Q_N = 60 l/min]

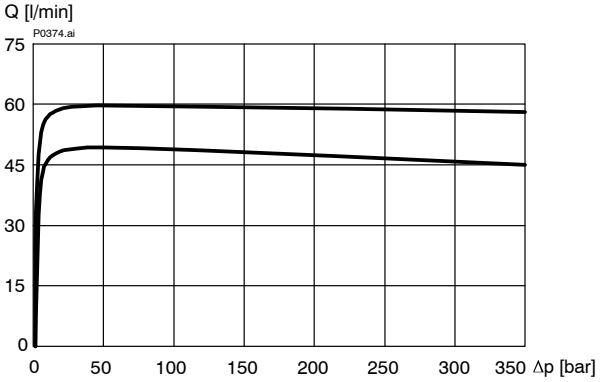

Q = f (Δp) Flow-rate adjust. characteristic [Q_N = 70 l/min]

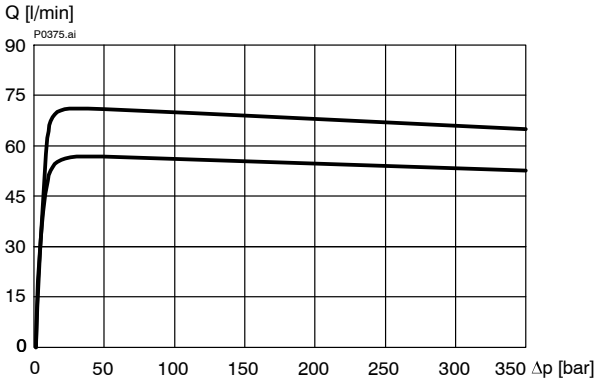

Q = f (Δp) Flow rate adjust. characteristic [Q_N = 85 l/min]

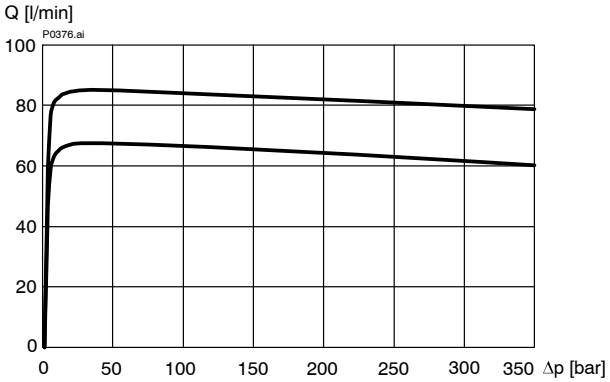

Q = f (Δp) Flow-rate adjust. characteristic [Q_N = 105 l/min]

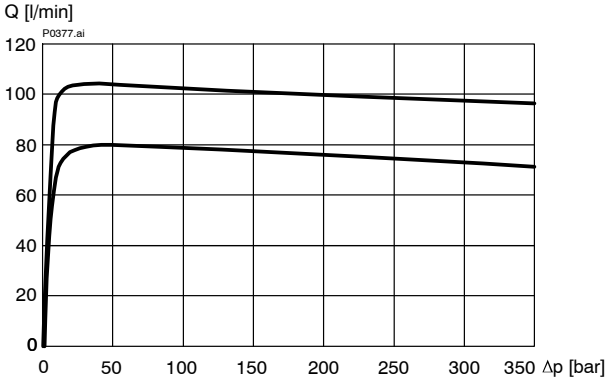

Q = f (Δp) Flow-rate adjust. characteristic [Q_N = 120 l/min]

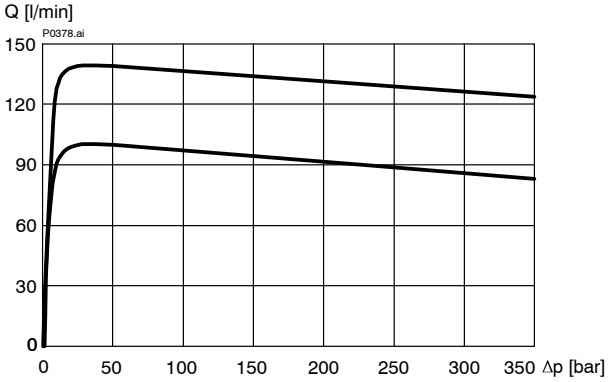

5 Dimensions & sectional view

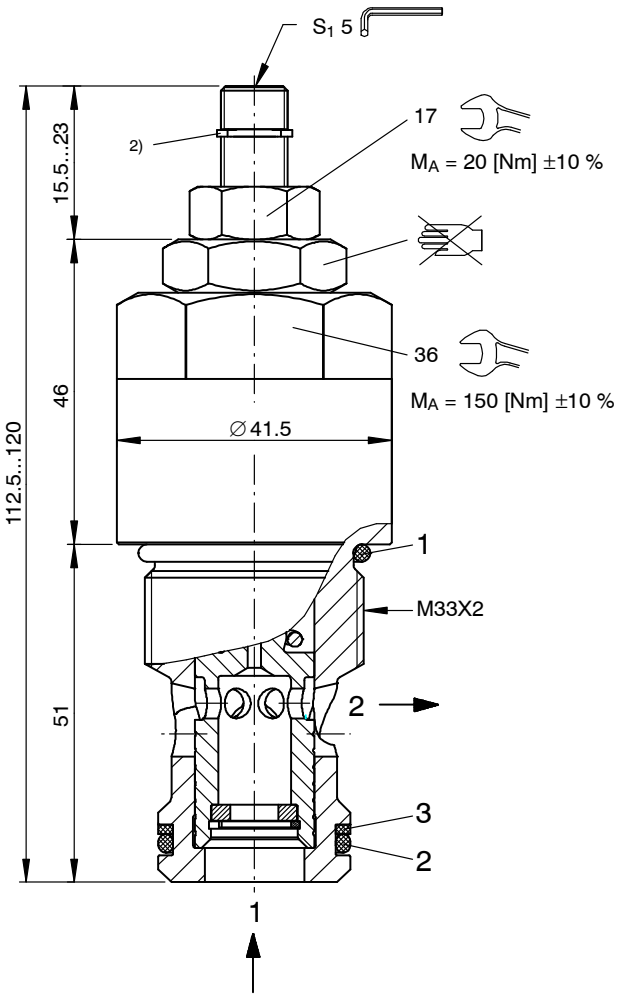

With adjusting screw “S”

With hand-knob adjuster “H”

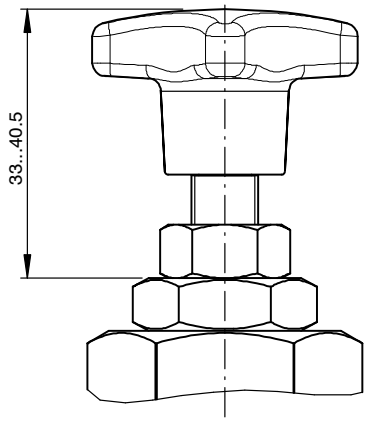

Adjusting screw with tamper-proof cap
(order separately in plain language)

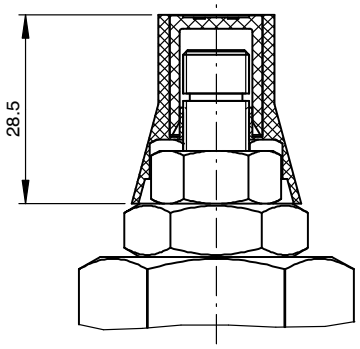

6 Installation information

IMPORTANT!
When fitting the cartridges, use the specified tightening torque. Set the required flow rate with the adjusting screw (s_1). After you have set the valve, lock the adjusting screw with the lock nut.

ATTENTION!
Only qualified personnel with mechanical skills may carry out any maintenance work. Generally, the only work that should ever be undertaken is to check, and possibly replace, the seals. When changing seals, oil or grease the new seals thoroughly before fitting them.

IMPORTANT!
Valve settings can be sealed by fitting the tamper-proof cap. To fit the cap, the snap ring [2)] has to be removed. Subsequent adjustment is only possible by destroying the tamper-proof cap.

Seal kit NBR no. DS-461-N [1)]

Item	Qty.	Description
1	1	O-ring no. 123 ∅ 29,82 x 2,62 N90
2	1	O-ring no. 119 ∅ 23,47 x 2,62 N90
3	1	Backup ring ∅ 22,0 x 2,25 x 1,4 FI0751

IMPORTANT!
[1)] Seal kit with FKM (Viton) seals, no. DS-461-V

7 Ordering code

Ex. M R P A - 2 - 10 - S - 120 _ - _

M	=	flow valve
R	=	flow-control valve
P	=	screw-in cartridge M33 x 2
A ... Q	=	standard model - see relevant data sheets
Z ... R	=	special features - please consult BUCHER
2	=	2-way model
10	=	nominal size 10
S	=	screw adjuster (**standard**)
H	=	hand-knob adjuster
		nominal flow rate Q_N – control range:
120	=	100 … 120 l/min
105	=	80 … 105 l/min
085	=	67 … 85 l/min
070	=	57 … 70 l/min
060	=	48 … 60 l/min
050	=	38 … 50 l/min
(blank)	=	NBR (Nitrile) seals (**standard**)
V	=	FKM (Viton) seals
		(special seals - please contact BUCHER)
1 ... 9	=	design stage (omit when ordering new units)

IMPORTANT!
When required, the tamper-proof cap (the adjustment seal) must be ordered separately in plain language.

8 Related data sheets

Reference	(старый номер)	Description
400-P-040011	(i-32)	The form-tool hire programme
400-P-080131		Cavity type ER to Bucher standards
400-P-750121		Line-mounting body, type GERA (G 3/4”)
400-P-010101		$MTTF_D$ values for hydraulic valves

info.ch@bucherhydraulics.com www.bucherhydraulics.com

© 2020 by Bucher Hydraulics AG Frutigen, CH-3714 Frutigen
All rights reserved.
Data is provided for the purpose of product description only, and must not be construed as warranted characteristics in the legal sense. The information does not relieve users from the duty of conducting their own evaluations and tests. Because the products are subject to continual improvement, we reserve the right to amend the product specifications contained in this catalogue.

Classification: 430.300.330.305.320

BUCHER
hydraulics
WWW.SUMY.IR

General information
Cavity

Type series: EF

Dimensions and sectional view

Beispiel für die Masseinheit:
Example for the dimensional units:
0.79 = 0.79 mm millimeter

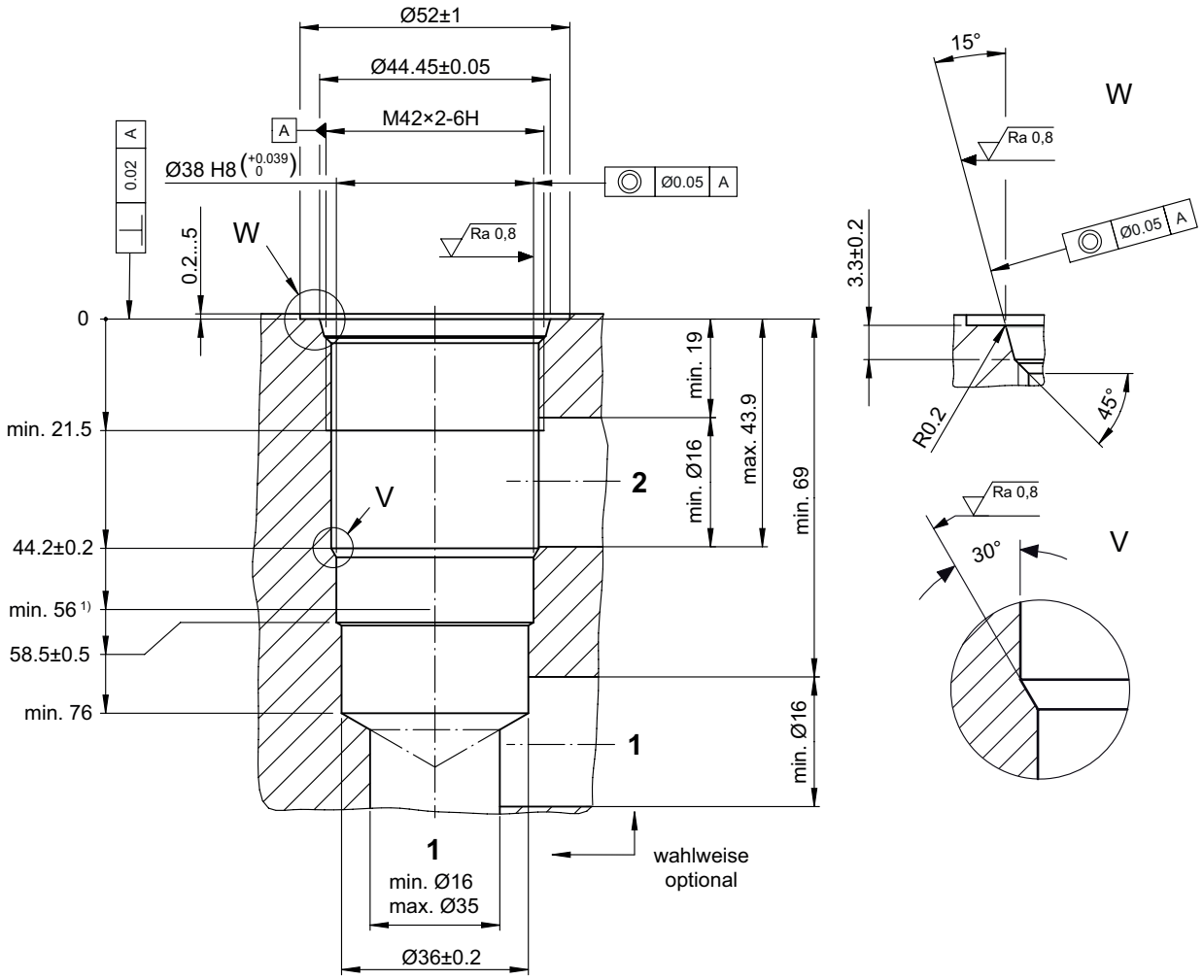

HINWEIS!
NOTE!

1) Passungstiefe
Minimum depth of specified diametral tolerance

Ra 3,2 (√)

Installation information

ATTENTION!
You must maintain the specified positional and diametral tolerances. To ensure trouble-free operation of the screw-in cartridges, we strongly recommend that pilot drilling, boring, reaming and cavity thread-cutting are always performed in one setup.

NOTE!
The cavity type EF complies with the standard according to ISO 7789: 42-01-0-07.

ATTENTION!
For improved Δp values with directional and logic valves, use the cavity with an annular groove in the 2 stage.

NOTE!
We offer form tool sets for sale or hire. For further information, see data sheet 400-P-040011.

info.ch@bucherhydraulics.com **www.bucherhydraulics.com**

© 2023 by Bucher Hydraulics AG Frutigen, 3714 Frutigen, Switzerland

All rights reserved.
Data is provided for the purpose of product description only, and must not be construed as warranted characteristics in the legal sense. The information does not relieve users from the duty of conducting their own evaluations and tests. Because the products are subject to continual improvement, we reserve the right to amend the product specifications contained in this catalogue.

2-Way Flow-Control Cartridge, Size 16

Q_{max} = 200 l/min, p_{max} = 350 bar
With fixed orifice, load compensated, adjustable compensator spring
Series MRPB-2-16…

- Load-independent flow rate
- Compact design for cavity type EF – M42 x 2 to Bucher standards
- Various flow-rate control ranges
- Optimum integration in system thanks to adjustable pressure-compensator spring
- Reliable operation over the whole pressure and flow range (even with high pressure differentials)
- Available with hand-knob or tamper-proof cap
- All exposed parts with zinc-nickel plating
- Can be fitted in a line-mounting body

1 Description

Series MRPB… 2-way flow-control valves are size 16, high performance, load-compensated screw-in cartridges with an M42 x 2 mounting thread. By means of a fixed orifice and an integral pressure-compensator function, the flow rate to an actuator is kept constant regardless of load changes. The load compensation is done by the pressure-compensator piston, which maintains the pressure drop across the fixed orifice at a constant level. The flow-control cartridges can be supplied with various fixed orifices that determine the flow-control range. Using the adjustable pressure-compensator spring, the required flow rate (the range depends on the fixed orifice) is adjusted built in the system. The spring is adjusted by means of an adjusting screw or a hand-knob. To safeguard valve settings, the adjusting spindle can be sealed with a tamper-proof cap. These 2-way flow-control cartridges are used in in mobile and industrial applications where a constant flow rate must be maintained under conditions of varying load. All external parts of the cartridge are zinc-nickel plated to DIN 50 979 and are thus suitable for use in the harshest operating environments. If you intend to manufacture your own cavities or are designing a line-mounting installation, please refer to the section “Related data sheets”.

2 Symbol

Simplified

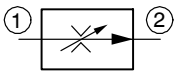

Detailed

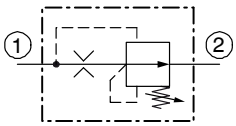

3 Technical data

General characteristics	Description, value, unit
Designation	2-way flow-control
Design	with fixed orifice, load compensated, adjustable compensator spring, with mechanical operation
Mounting method	screw-in cartridge M42 x 2
Tightening torque	200 Nm ± 10 %
Size	nominal size 16 mm, cavity type EF to Bucher standards
Weight	1.10 kg
Mounting attitude	unrestricted
Ambient temperature range	-25 °C … +80 °C
$MTTF_D$ values	150 years, see data sheet 400-P-010101-en

Hydraulic characteristics	Description, value, unit
Maximum operating pressure	350 bar
Maximum flow rate	200 l/min
Nominal flow rate Q_N	200, 140, 110, 70 l/min
Flow direction	1 → 2, see symbols
Hydraulic fluid	HL and HLP mineral oil to DIN 51 524; for other fluids, please contact BUCHER
Hydraulic fluid temperature range	-25 °C … +80 °C
Viscosity range	10…650 mm^2/s (cSt), recommended 15...250 mm^2/s (cSt)
Minimum fluid cleanliness Cleanliness class to ISO 4406 : 1999	class 20/18/15

4 Performance graphs

measured with oil viscosity 33 mm^2/s (cSt)

Q = f (Δp) Flow-rate adjust. characteristic [Q_N = 70 l/min]

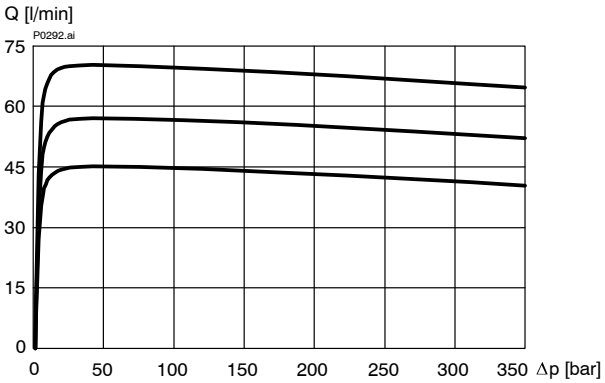

Q = f (Δp) Flow-rate adjust. characteristic [Q_N = 110 l/min]

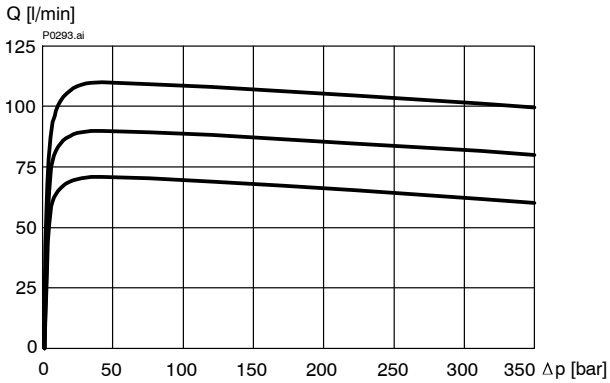

Q = f (Δp) Flow rate adjust. characteristic [Q_N = 140 l/min]

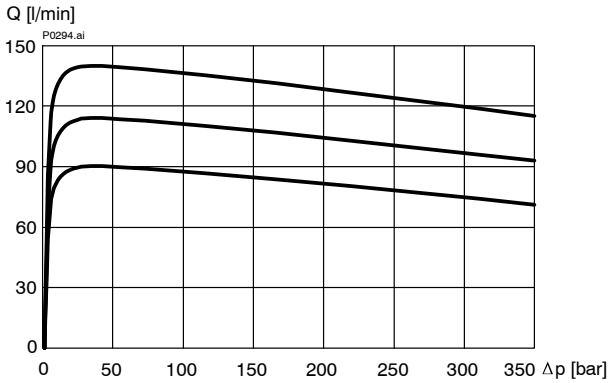

Q = f (Δp) Flow-rate adjust. characteristic [Q_N = 200 l/min]

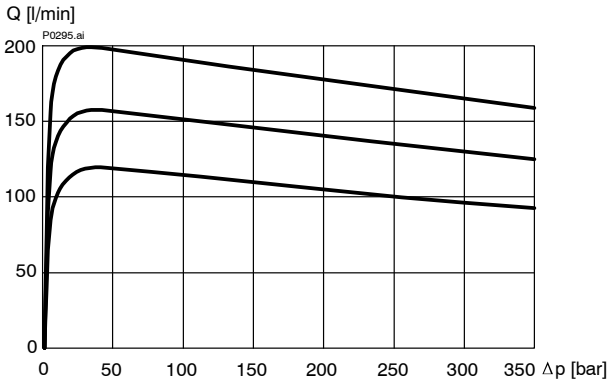

5 Dimensions & sectional view

With adjusting screw “S”

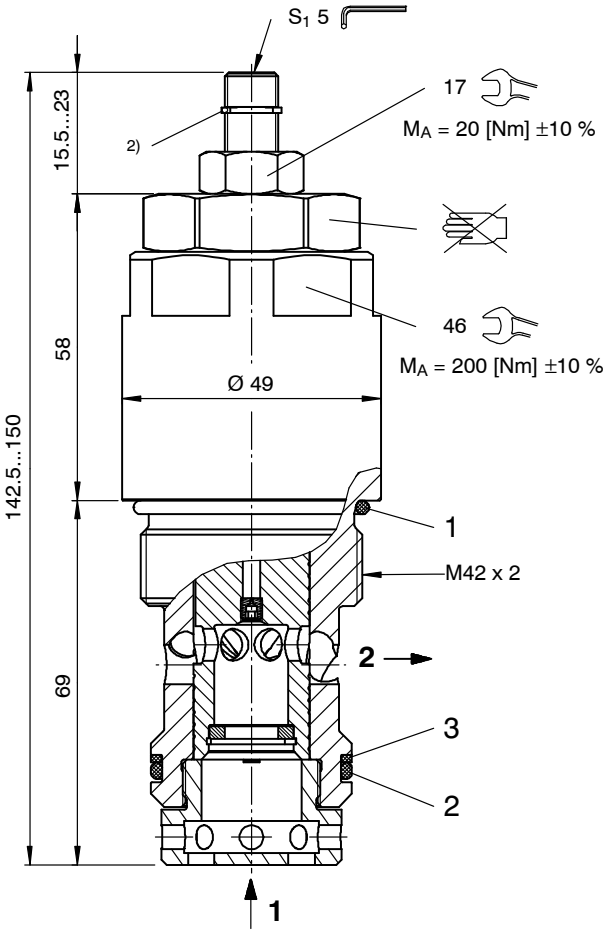

With hand-knob adjuster “H”

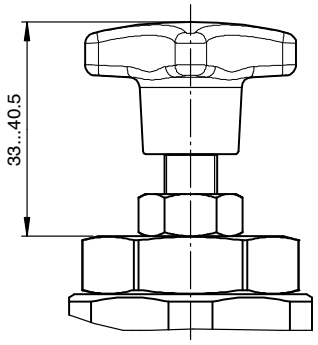

Adjusting screw with tamper-proof cap
(order separately in plain language)

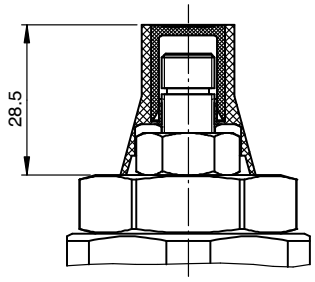

6 Installation information

IMPORTANT!
When fitting the cartridges, use the specified tightening torque. Set the required flow rate with the adjusting screw (s_1). After you have set the valve, lock the adjusting screw with the lock nut.

ATTENTION!
Only qualified personnel with mechanical skills may carry out any maintenance work. Generally, the only work that should ever be undertaken is to check, and possibly replace, the seals. When changing seals, oil or grease the new seals thoroughly before fitting them.

IMPORTANT!
Valve settings can be sealed by fitting the tamper-proof cap. To fit the cap, the snap ring [2)] has to be removed. Subsequent adjustment is only possible by destroying the tamper-proof cap.

Seal kit NBR no. DS-418-N [1)]

Item	Qty.	Description
1	1	O-ring no. 129 ∅ 39,34 x 2,62 N90
2	1	O-ring no. 125 ∅ 32,99 x 2,62 N90
3	1	Backup ring ∅ 32,0 x 2,0 x 1,4 FI0751

IMPORTANT!
[1)] Seal kit with FKM (Viton) seals, no. DS-418-V

7 Ordering code

Ex. M R P B - 2 - 16 - S - 200 _ - _

M	=	flow valve
R	=	flow-control valve
P	=	screw-in cartridge M42 x 2
A ... Q	=	standard model - see relevant data sheets
Z ... R	=	special features - please consult BUCHER
2	=	2-way model
16	=	nominal size 16
S	=	screw adjuster (**standard**)
H	=	hand-knob adjuster
		nominal flow rate Q_N – control range:
200	=	120 … 200 l/min
140	=	90 … 140 l/min
110	=	70 … 110 l/min
070	=	45 … 70 l/min
(blank)	=	NBR (Nitrile) seals (**standard**)
V	=	FKM (Viton) seals (special seals - please contact BUCHER)
1 ... 9	=	design stage (omit when ordering new units)

IMPORTANT!
When required, the tamper-proof cap (the adjustment seal) must be ordered separately in plain language.

8 Related data sheets

Reference (старый номер)	Description
400-P-040011 (i-32)	The form-tool hire programme
400-P-080127	Cavity type EF to Bucher standards
400-P-750131	Line-mounting body, type GEFA (G 1”)
400-P-010101	$MTTF_D$ values for hydraulic valves

info.ch@bucherhydraulics.com www.bucherhydraulics.com

© 2020 by Bucher Hydraulics AG Frutigen, CH-3714 Frutigen
All rights reserved.
Data is provided for the purpose of product description only, and must not be construed as warranted characteristics in the legal sense. The information does not relieve users from the duty of conducting their own evaluations and tests. Because the products are subject to continual improvement, we reserve the right to amend the product specifications contained in this catalogue.

Classification: 430.300.330.305.330

BUCHER hydraulics
WWW.SUMY.IR

Flow valve
Flow control valve

Q_{max} = 80 l/min, p_{max} = 315 bar
load-compensated, spool type, mechanical operation
Type series: SRCB-H-2...

- Screw-in cartridge valve
- ZnNi plating (720h DIN EN ISO 9227 NSS)
- 2-way flow control valve
- Compact construction
- Flow rates are unaffected by changes in temperature and load

Description

The flow control valve, series SRCB-H-2 is a mechanical operated, load compensated screw-in valve with an M42×1.5 mounting thread. This valve is used to set the working speed of hydraulic actuators, the setting being load-independent. The special orifice design ensures that the flow setting is largely independent of the viscosity of the fluid. The cartridge design allows the valve to be installed in any customized control block. All external parts of the screw-in valve are zinc-nickel plated and are thus suitable for use in the harshest operating environments.

Symbol

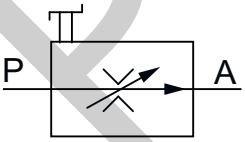

Technical data

General characteristics	Description, value, unit
Product status	Phase-Out
Function group	Flow valve
Function	Flow control valve
Design	Screw-in cartridge valve

Phase-Out

WWW.SUMY.IR

General characteristics	Description, value, unit
Controls	mechanical operation
Characteristic	load-compensated, spool type
Transition/central position of spool/piston	closed orifice
MTTFd value	150 years
Thread size	M42×1,5
Mounting attitude	unrestricted
Tightening torque aluminium	50 Nm
Minimum ambient temperature	- 30 °C
Maximum ambient temperature	+ 50 °C
Surface protection	ZnNi plating (720h DIN EN ISO 9227 NSS)
Sealing material	FKM (fluorocarbon rubber / VITON) seals

Hydraulic characteristics	Description, value, unit
Maximum operating pressure	315 bar
Maximum flow rate	80 l/min
Control flow range	10, 16, 25,32, 40, 50, 63, 80 l/min
Flow direction	see symbol
Hydraulic fluid	HL and HLP mineral oil according to DIN 51 524; other fluids on request!
Minimum fluid temperature	- 20 °C
Maximum fluid temperature	+ 80 °C
Viscosity range	10 ... 300 mm^2/s (cSt)
Minimum fluid cleanliness (cleanlineless class according to ISO 4406:1999)	class 20/18/15
Min. pressure difference (pressure compensator)	7 bar
Control accuracy (related to the nominal flow rate)	Load-dependency when under pressure: max. ± 2.5 %
Internal leakage flow rate	max. 100 cm^3/min at 100 bar

NOTE!
Values refer to an oil viscosity of 35mm^2/ [cSt].

NOTE!
Control accuracy depends on th selected flow range.

NOTE!
For other values please contact Bucher Hydraulics.

Phase-Out

Performance graphs

measured with oil viscosity 35.0 mm²/s (cSt)

Q = f (pl) Flow rate load-pressure

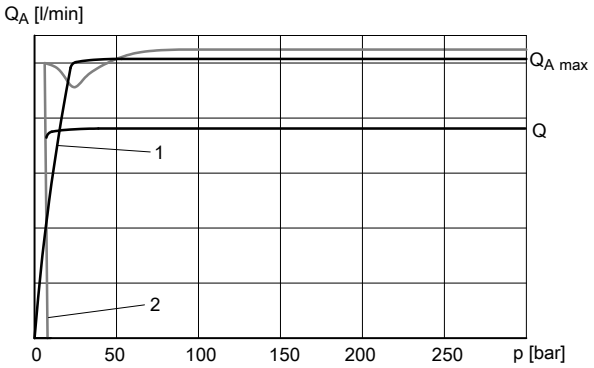

1 = Q_A - Constant flow pressurised
2 = Q_B - Surplus flow pressurised

Δp = f (Q) Pressure drop-flow rate characteristic

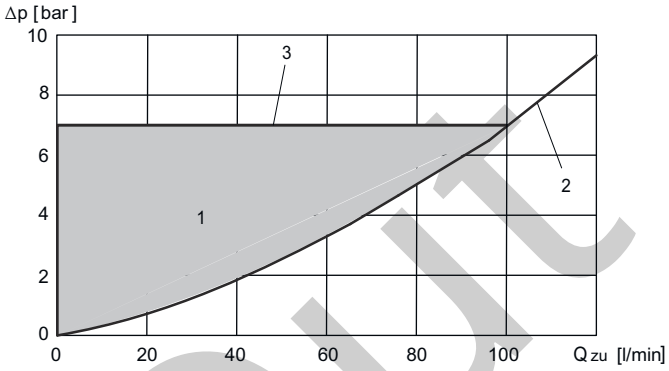

1 = Pressure loss area (The actual pressure-loss characteristic is dependent on the tank pressure at port B)
2 = Control valve throttlingcurve (Dependent on applied body)
3 = Control Δp - characteristic 7 bar

Dimensions and sectional view

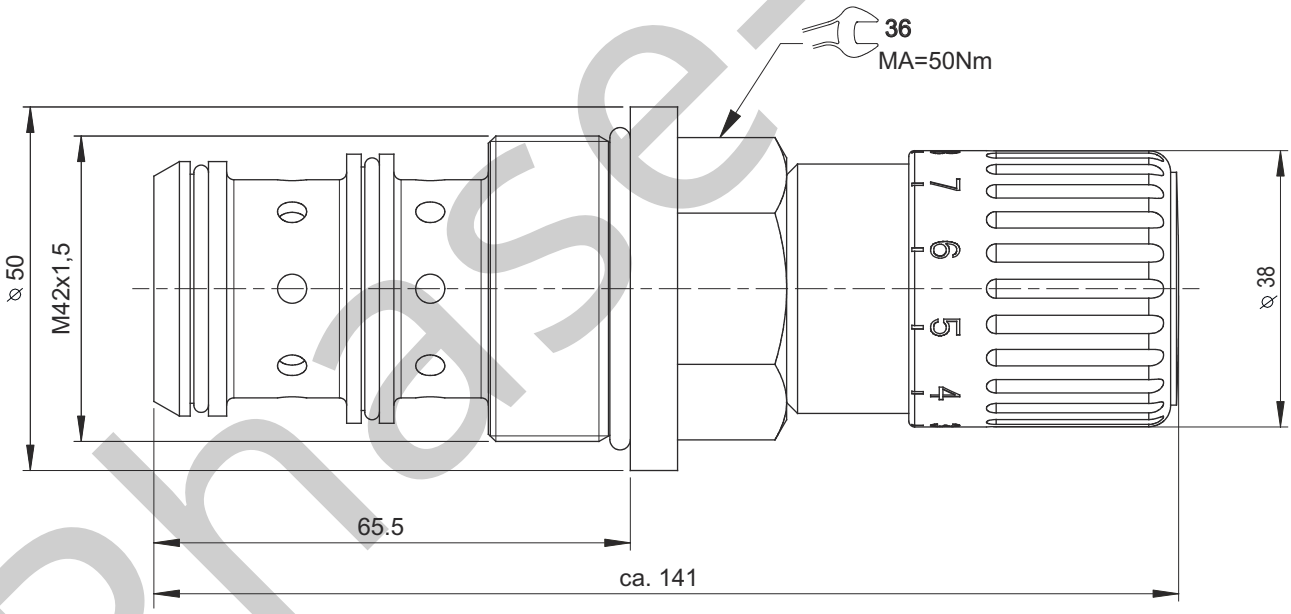

Phase-Out

Installation information

ATTENTION!
Expert and product knowledge is required for the layout of this valve type. Use exclusively for the intended purpose within the indicated values. The valve manufacturer must be consulted for use of the appliance outside the specifications. All applications must be verified by sufficient tests to ensure safety in the application. The ultimate responsibility for safety during installation and use resides with the end appliance manufacturer.
All limit values listed in the data sheet apply to typical mobile hydraulic applications with a max. rate of pressure rise of 4000 bar (higher values after consultation).

ATTENTION!
Only qualified personnel with mechanical skills may carry out any maintenance work. Generally, the only work that should ever be undertaken is to check, and possibly replace, the seals. When changing seals, oil or grease the new seals thoroughly before fitting them.

NOTE!
When fitting the screw-in cartridge valve, use the specified tightening torque. The value can be found in the chapter "Technical data".
We offer form tool sets for sale or hire.
Description: 1835 A D32 (Id. No.: 100603875).

NOTE!
Bleed all air from the system (if possible, operate valve several times without load).

Application examples

Possible applications can be:
- Harvesters
- Sweepers
- Refuse collection vehicles
- Fertiliser spreaders
- Winter service machines
- Mowers
- Wood chippers
- Road rollers
- Forestry machines
- Municipal vehicles
- ...

Phase-Out

BUCHER hydraulics
WWW.SUMY.IR

Ordering code

SR C B 032 H 2 - 1

SR	=	Flow control valve	
C	=	Cartridge	
B	=	Size	
010	=	Constant flow range	10 l/min
016	=	Costant flow range	16 l/min
025	=	Costant flow range	25 l/min
032	=	Costant flow range	32 l/min
040	=	Costant flow range	40 l/min
050	=	Costant flow range	50 l/min
063	=	Costant flow range	63 l/min
080	=	Costant flow range	80 l/min
H	=	Operation via hand controller	
2	=	2-way flow control valve	
1...9	=	Design number (to be inserted by the factory)	

Related data sheets

Reference	Description
100-P-400971	Cavity GB3NM42

Phase-Out

info.de@bucherhydraulics.com www.bucherhydraulics.com

© 2025 by Bucher Hydraulics GmbH, 79771 Klettgau, Germany

All rights reserved.
Data is provided for the purpose of product description only, and must not be construed as warranted characteristics in the legal sense. The information does not relieve users from the duty of conducting their own evaluations and tests. Because the products are subject to continual improvement, we reserve the right to amend the product specifications contained in this catalogue.

BUCHER hydraulics

ELECTRO–HYDRAULIC, PROPORTIONAL, PRESSURE COMP, FLOW CONTROL VALVE.

WWW.SUMY.IR

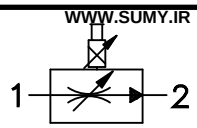

TORQUE:
Steel = 55/60 Ft–Lb. [74/81 Nm]
Aluminum = 35/40 Ft–Lb. [47/54 Nm]

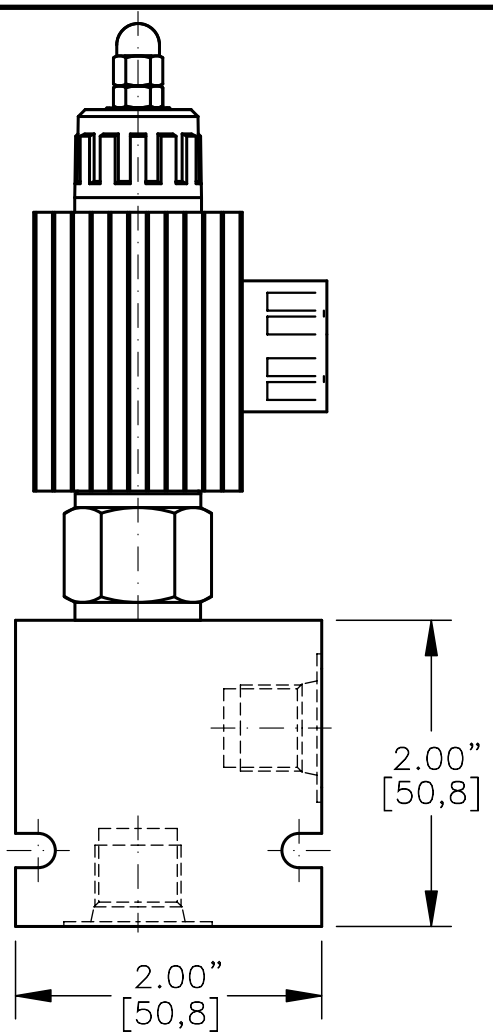

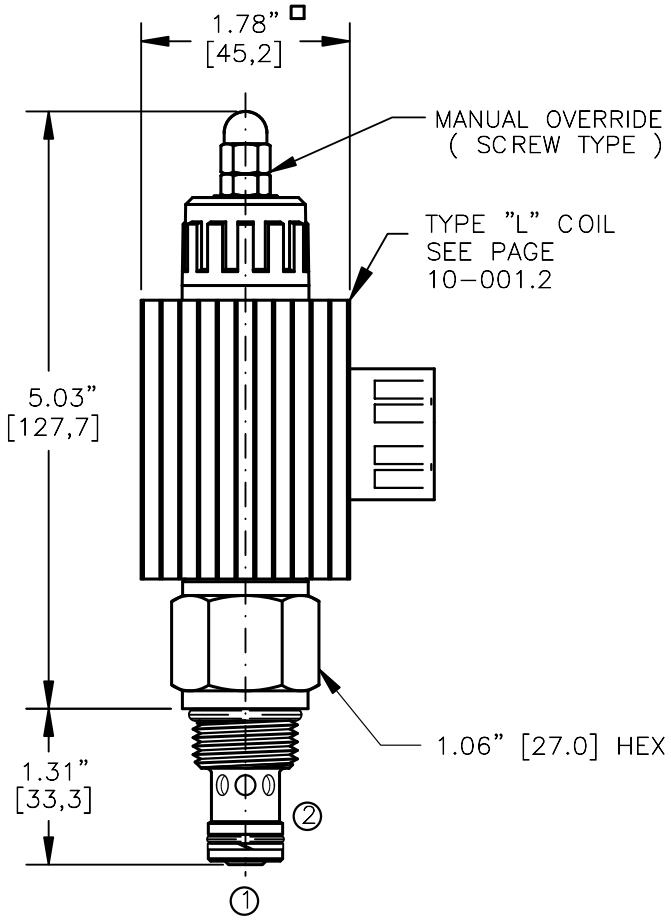

NOTES:
1. FOR ALUMINUM OR STEEL VALVE HOUSING CONFIGURATIONS SEE PAGE 0–012.1
2. SOLENOIDS AVAILABLE WITH DIODES – CONSULT FACTORY.

EPFI–10–X–X–XX–X–X–XXX X

BASIC

SIZE
10 = 7/8"–14UNF

SEALS
N = BUNA "N"
V = VITON

STYLE
C = NORMALLY CLOSED
O = NORMALLY OPEN

REGULATED FLOW
04 = 0 TO 4.0 GPM
08 = 0 TO 8.0 GPM

PORTS = CARTRIDGE ONLY
0 = G 1/4" BSPP
02BX = G 3/8" BSPP
06BX = SAE – #6
06TX = SAE – #8
08TX "A" = ALUM. HOUSING
"S" = STEEL HOUSING

ADJUSTMENT OPTIONS
0 = NONE
M = MANUAL OVERRIDE

TERMINALS
L = 18GA. 24" LEADS
T = SPADE TERM.
B = BOLT TERM.
G = DIN43650
W = WEATHER–PACK
D = DEUTSCH–DT04–2P
M = METRI–PACK CONN.

VOLTAGE AMPS
12D = 12 VDC 3.00
24D = 24 VDC 1.50

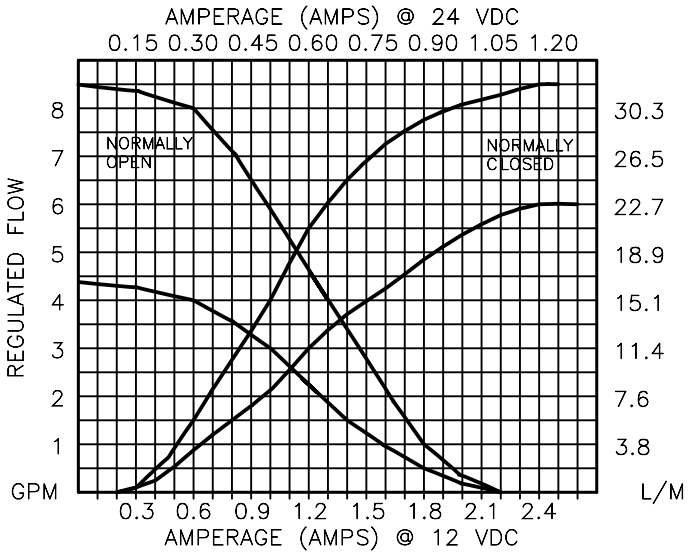

BUCHER hydraulics

WWW.SUMY.IR

PROPORTIONAL, PRESSURE COMPENSATED, FLOW CONTROL VALVE.

DESCRIPTION

This valve is a cartridge style, electro–hydraulic, proportional, in–line (RESTRICTIVE) type, pressure compensated, hydraulic flow control. Regulated flow 8.0 GPM [30,2 L/M] max. is proportional to the current input regardless of load or system pressure.

OPERATIONS

This unit is a direct acting (NO PILOT FLOW), electro hydraulic, proportional, pressure compensated flow control valve. When the coil is energized the armature moves the metering orifice open against a precision bias spring varying the flow. A pressure compensatory spool (HYDROSTAT) modulates the flow at 100 PSI/6,9 Bar delta "P" providing the valve with a constant regulated flow regardless of load or system pressure. For the normally closed product when the current is increased to the coil the flow will increase. For the normally open product as the current is increased to the coil the flow will decrease. IN THE EVENT OF POWER FAILURE THE NORMALLY CLOSED VALVE WILL CLOSE AND THE NORMALLY OPEN VALVE WILL OPEN.

FEATURES AND BENEFITS

Continuous–duty, very low heat rise & waterproof solenoid coil.
Interchangeable solenoid coils & termination options available.
Hardened precision fitted spool & sleeve provides reliable, long life.
Very efficient wet – armature solenoid core tube construction.
All external carbon steel parts are plated for longer life against the elements.
All cartridge valves are 100% functionally tested.

BUCHER hydraulics

WWW.SUMY.IR

PROPORTIONAL, PRESSURE COMPENSATED, FLOW CONTROL VALVE.

SPECIFICATIONS

OPERATING PRESSURE: 5,000 PSI [350 Bar]
PROOF PRESSURE: 10,000 PSI [700 Bar]
REGULATED FLOW: 8.0 GPM [30,2 l/m] Max. See performance chart.
INTERNAL LEAKAGE: 20/40 in^3/min [328/655 cc/m]@3/5K PSI [175/350 Bar]

VALVE HOUSINGS: 2500 PSI [175 Bar] = Aluminum – Anodized.
5000 PSI [350 Bar] = Steel – Unplated.
OPERATING TEMPERATURE: –40° to +250° F. [–40° to +120° C.]
OPERATING MEDIA: All general purpose hydraulic fluids such as MIL–H–5606, SAE–#10, SAE–#20, etc.
RESPONSE: The most efficient method to control this valve is with current control and a 50 Hz dither.
POWER REQUIREMENTS: 12 VDC, Operating current 0.2 to 2.2 AMPS.
24 VDC, Operating current 0.1 to 1.1 AMPS.
SEAL KIT: SKN–1022 Buna "N"
SKV–1022 Viton
INSTALLATION: No restrictions.
WEIGHT: 1.9 lb [0,86 kg] cartridge with coil only.
VALVE CAVITY: #C1020, See Page 0–012.0.

info.el@bucherhydraulics.com www.bucherhydraulics.com/commoncavity

© 2015 by Bucher Hydraulics, Inc., 2545 Northwest Parkway, Elgin, Illinois 60124, USA
All rights reserved.
The technical information in this catalog, may contain calculated figures (for reference only) and not actual performance data for this product. Data is provided for the purpose of product description only, and must not be construed as warranted characteristics in the legal sense. The information does not relieve users from the duty of conducting their own evaluations and tests. Because the products are subject to continual improvement, we reserve the right to amend the product specifications contained in this catalogue.

BUCHER hydraulics

ELECTRO–HYDRAULIC, PROPORTIONAL, PRESSURE COMP, FLOW CONTROL VALVE.

WWW.SUMY.IR

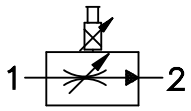

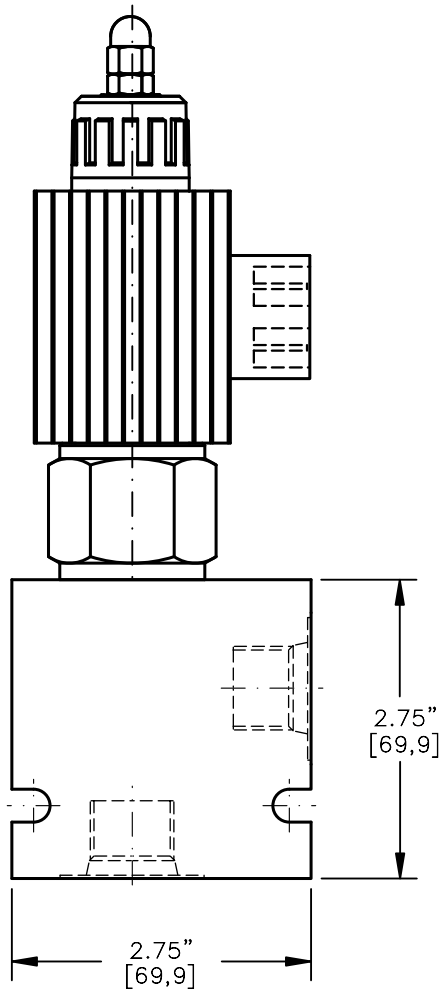

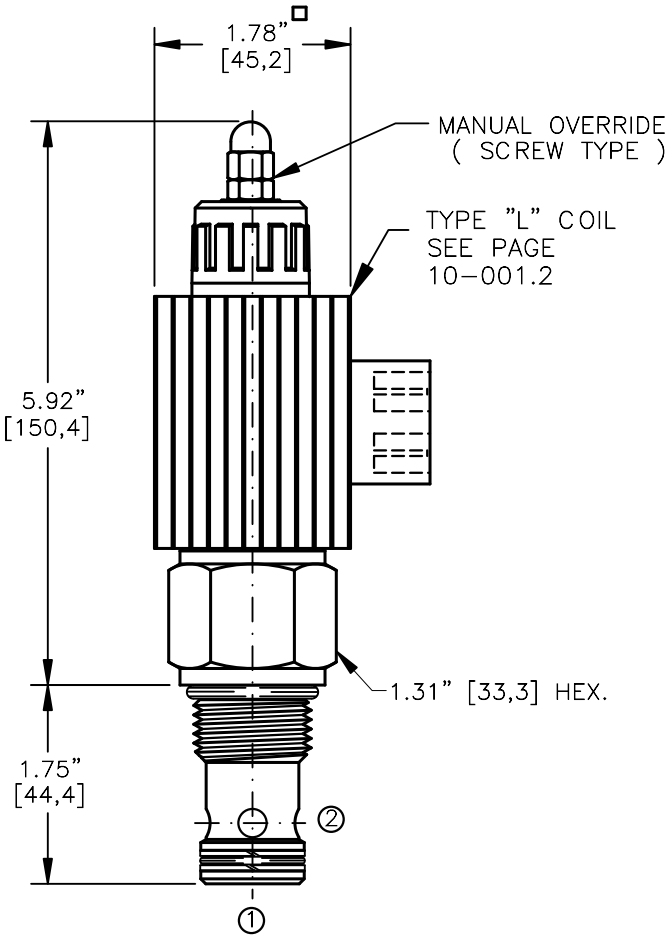

NOTES:
SOLENOIDS AVAILABLE WITH DIODES – CONSULT FACTORY.

TORQUE
Steel = 75/80 Ft–Lb. [102/109 Nm]
Aluminum = 55/60 Ft–Lb. [74/81 Nm]

EPFI–12–N–X–XX–X–X–XXX X

BASIC

SIZE
12=1.062"–12UNF

SEALS
N = BUNA "N"
V = VITON

TYPE
C = NORMALLY CLOSED
O = NORMALLY OPEN

REGULATED FLOW
05 = 0 TO 5.0 GPM
10 = 0 TO 10.0 GPM
15 = 0 TO 15.0 GPM

"A" – ALUM. HOUSING
"S" – STEEL HOUSING

PORTS
0 = CARTRIDGE
4BX = G 1/2" BSPP
6BX = G 3/4" BSPP
10TX = SAE – #10
12TX = SAE – #12

ADJUSTMENT OPTIONS
0 = NONE
M = MANUAL OVERRIDE

VOLTAGE AMPS
12D = 12 VDC 3.00
24D = 24 VDC 1.50

TERMINALS
L=18GA. 24" LEADS
T=SPADE TERM.
B=BOLT TERM.
G=DIN43650
W=WEATHER–PACK
D=DEUTSCH–DT04–2P
M=METRI–PACK CONN

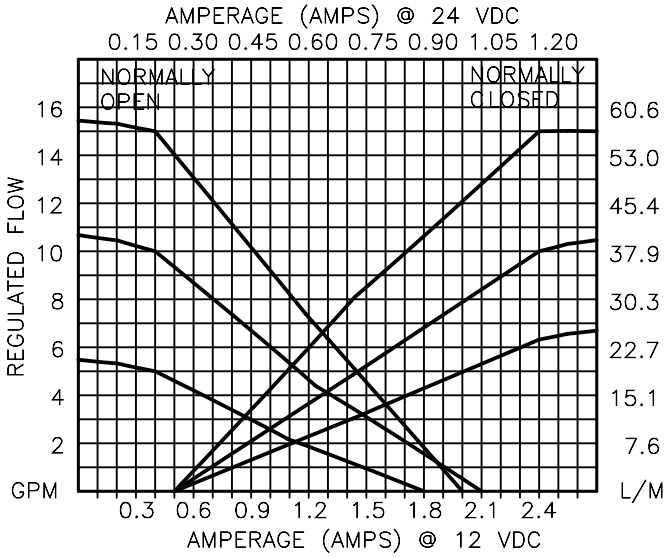

BUCHER hydraulics

WWW.SUMY.IR

PROPORTIONAL, PRESSURE COMPENSATED, FLOW CONTROL VALVE.

DESCRIPTION

This valve is a cartridge style, electro–hydraulic, proportional, in–line (RESTRICTIVE) type, pressure compensated, hydraulic flow control. Regulated flow 15.0 GPM [56,8 l/m] max. is proportional to the current input regardless of load or system pressure.

OPERATIONS

This unit is a direct acting (NO PILOT FLOW), electro hydraulic, proportional, pressure compensated flow control valve. When the coil is energized, the armature moves the metering orifice open against a precision bias spring varying the flow. A pressure compensator spool (HYDROSTAT) modulates the flow at 100 PSI/6,9 Bar delta "P" providing the valve with a constant regulated flow regardless of load or system pressure. For the normally closed product when the current is increased to the coil, the flow will increase. For the normally open product as the current is increased to the coil the flow will decrease. IN THE EVENT OF POWER FAILURE, THE NORMALLY CLOSED VALVE WILL CLOSE AND THE NORMALLY OPEN VALVE WILL OPEN.

FEATURES AND BENEFITS

Continuous–duty, very low heat rise & waterproof solenoid coil.
Interchangeable solenoid coils & termination options available.
Hardened precision fitted spool & sleeve provides reliable, long life.
Very efficient wet – armature solenoid core tube construction.
All external carbon steel parts are plated for longer life against the elements.
All cartridge valves are 100% functionally tested.

BUCHER hydraulics

WWW.SUMY.IR

PROPORTIONAL, PRESSURE COMPENSATED, FLOW CONTROL VALVE.

SPECIFICATIONS

OPERATING PRESSURE: 5,000 PSI [350 Bar]
PROOF PRESSURE: 10,000 PSI [700 Bar]
REGULATED FLOW: 15.0 GPM [56,8 l/m] Max. See performance chart.
INTERNAL LEAKAGE: 20/40 in³/min [328/655 cc/m] @ 3/5K PSI [175/350 Bar]
VALVE HOUSINGS: 2500 PSI [175 Bar] = Aluminum – Anodized.
5000 PSI [350 Bar] = Steel – Unplated.
OPERATING TEMPERATURE: –40° to +250° F. [–40° to +120° C.]
OPERATING MEDIA: All general purpose hydraulic fluids such as MIL–H–5606, SAE–#10, SAE–#20, etc.
RESPONSE: The most efficient method to control this valve is with current control and a 50 Hz dither.
POWER REQUIREMENTS: 12 VDC, Operating current 0.2 to 2.2 AMPS.
24 VDC, Operating current 0.1 to 1.1 AMPS.
SEAL KIT: SKN–1222 Buna "N"
SKV–1222 Viton
INSTALLATION: No restrictions.
WEIGHT: 2.27 lb [1,03 kg] cartridge with coil only.
VALVE CAVITY: #C1220, See Page 0–013.0.

info.el@bucherhydraulics.com www.bucherhydraulics.com/commoncavity

© 2015 by Bucher Hydraulics, Inc., 2545 Northwest Parkway, Elgin, Illinois 60124, USA
All rights reserved.
The technical information in this catalog, may contain calculated figures (for reference only) and not actual performance data for this product. Data is provided for the purpose of product description only, and must not be construed as warranted characteristics in the legal sense. The information does not relieve users from the duty of conducting their own evaluations and tests. Because the products are subject to continual improvement, we reserve the right to amend the product specifications contained in this catalogue.

BUCHER hydraulics

ELECTRO–HYDRAULIC, PROPORTIONAL, IN–LINE, PRESSURE COMP, FLOW CONTROL VALVE.

WWW.SUMY.IR

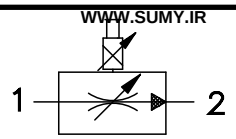

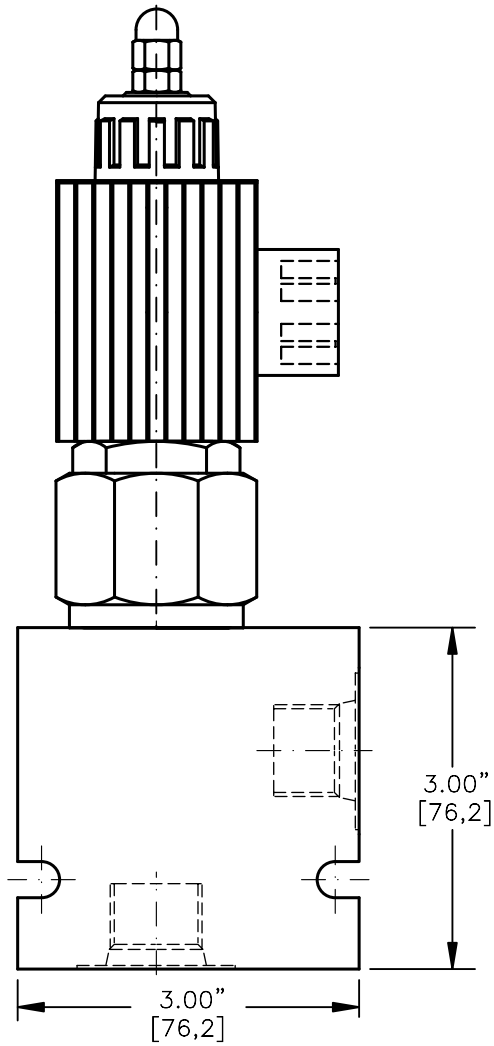

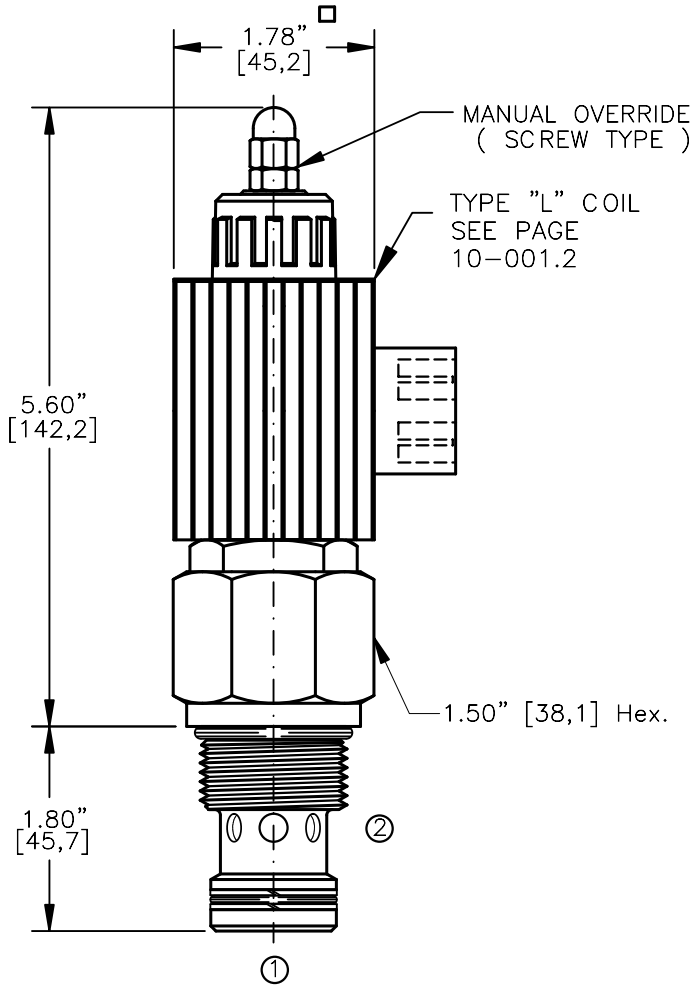

TORQUE:

Steel = 95/100 Ft–Lb. [129/136 Nm]

Aluminum = 70/75 Ft–Lb. [95/102 Nm]

EPFC–16–X–XX–X–X–XXX X

BASIC

SIZE
16 = 1.312"–12UNF

SEALS
N = BUNA "N"
V = VITON

REGULATED FLOW
05 = 0 TO 5.0 GPM
10 = 0 TO 10.0 GPM
15 = 0 TO 15.0 GPM
20 = 0 TO 20.0 GPM

PORTS = CARTRIDGE ONLY
0 = G 3/4" BSPP
06BX = G 1" BSPP
08BX = SAE – #12
12TX = SAE – #16
16TX "A" = ALUM. HOUSING
"S" = STEEL HOUSING

ADJUSTMENT OPTIONS
M = MANUAL OVERRIDE

VOLTAGE AMPS
12D = 12 VDC 3.00
24D = 24 VDC 1.50

TERMINALS
L =18GA. 24" LEADS
T =SPADE TERM.
B =BOLT TERM.
G =DIN43650
W =WEATHER–PACK
D =DEUTSCH–DT04–2P
M =METRI–PACK CONN.

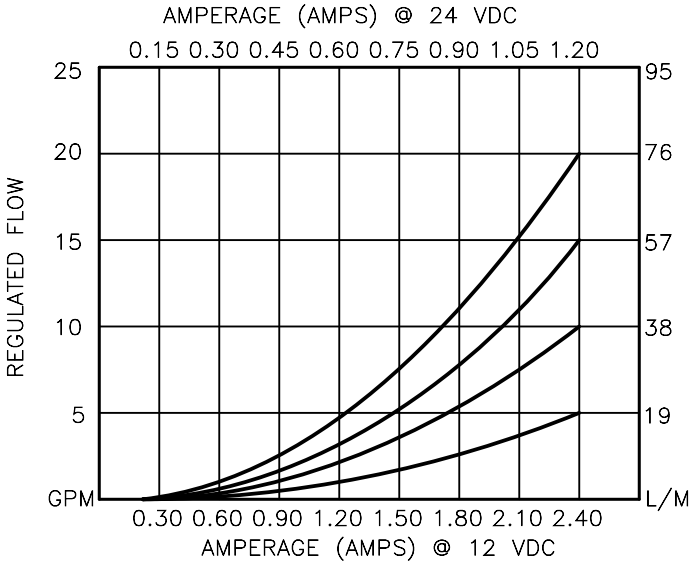

BUCHER hydraulics

WWW.SUMY.IR

PROPORTIONAL, IN–LINE TYPE, FLOW CONTROL VALVE.

DESCRIPTION

This valve is a cartridge style, electro–hydraulic, proportional, in–line (RESTRICTIVE) type, pressure compensated, hydraulic flow control. Regulated flow 20.0 GPM [76,0 L/M] max. is proportional to the current input regardless of load or system pressure.

OPERATIONS

This unit is a direct acting (NO PILOT FLOW), electro hydraulic, proportional, pressure compensated, flow control valve. When the coil is energized the armature moves the metering orifice open against a precision bias spring varying the flow. A pressure compensator spool (HYDROSTAT) modulates the flow at 100 PSI/6,9 Bar delta "P" providing the valve with a constant regulated flow regardless of load or system pressure. When current is increased to the coil the flow will increase, as the current is decreased the flow will decrease proportionally.
IN THE EVENT OF POWER FAILURE THE VALVE WILL CLOSE.

FEATURES AND BENEFITS

Continuous–duty, very low heat rise & waterproof solenoid coil.
Interchangeable solenoid coils & terminations options available.
Hardened precision fitted spool & sleeve provides reliable, long life.
Very efficient wet – armature solenoid core tube construction.
All external carbon steel parts are plated for longer life against the elements.
All cartridge valves are 100% functionally tested.
Industry common cavity.

BUCHER hydraulics

WWW.SUMY.IR

PROPORTIONAL, IN-LINE TYPE, FLOW CONTROL VALVE.

SPECIFICATIONS

OPERATING PRESSURE: 5,000 PSI [350 Bar]
PROOF PRESSURE: 10,000 PSI [700 Bar]
REGULATED FLOW: 20.0 GPM [76,0 l/m] Max. See performance chart.
INTERNAL LEAKAGE: 20 cu.in/min [330 cc/m] @ 5,000 PSI [350 Bar]
VALVE HOUSINGS: 2500 PSI [175 Bar] = Aluminum - Anodized.
5000 PSI [350 Bar] = Steel - Unplated.
OPERATING TEMPERATURE: -40° to +250° F. [-40° to +120° C.]
OPERATING MEDIA: All general purpose hydraulic fluids such as MIL-H-5606, SAE-#10, SAE-#20, etc.
RESPONSE: The most efficient method to control this valve is with current control and a 50 Hz dither.
POWER REQUIREMENTS: 12 VDC, Operating current 0.2 to 2.2 AMPS.
24 VDC, Operating current 0.1 to 1.1 AMPS.
SEAL KIT: SKN-1622 Buna "N"
SKV-1622 Viton
INSTALLATION: No restrictions.
WEIGHT: 2.58 lb [1,17 kg] cartridge with coil only.
VALVE CAVITY: #C1620, See Page 0-014.0.

info.el@bucherhydraulics.com

www.bucherhydraulics.com/commoncavity

© 2015 by Bucher Hydraulics, Inc., 2545 Northwest Parkway, Elgin, Illinois 60124, USA
All rights reserved.
The technical information in this catalog, may contain calculated figures (for reference only) and not actual performance data for this product. Data is provided for the purpose of product description only, and must not be construed as warranted characteristics in the legal sense. The information does not relieve users from the duty of conducting their own evaluations and tests. Because the products are subject to continual improvement, we reserve the right to amend the product specifications contained in this catalogue.

BUCHER hydraulics
WWW.SUMY.IR

Cavity Type C1630

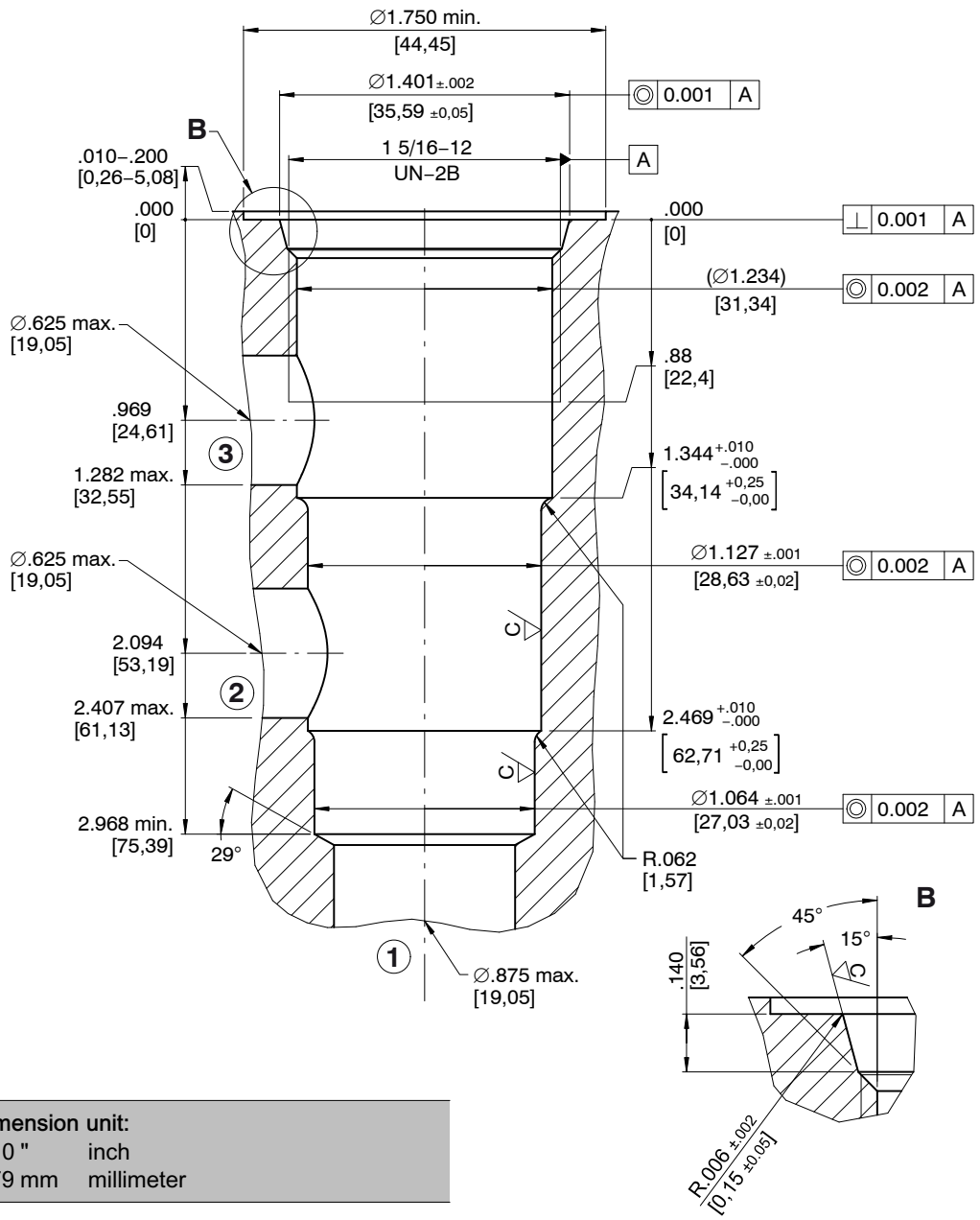

Example dimension unit:		
.010	= .010 "	inch
[0,79]	= 0,79 mm	millimeter

Dimension Tolerances	
Unless otherwise specified	
0.000	± .005″
0.00	± .010″
Angles	± 1/2°

Surface roughness		
Ra	C	D
	45 µin	125 µin
	(1.15 µm)	(3.2 µm)
	D	Unless otherwise specified

Reference: 520-P-000340-EN-01

1 Related data sheets

Reference	(Old no.)	Description
520-P-000050		The form-tool selling programme
520-P-000341	(0–034.1)	Line-mounting body, 16 Series – 3-way

info.el@bucherhydraulics.com www.bucherhydraulics.com/commoncavity

© 2016 by Bucher Hydraulics, Inc., 2545 Northwest Parkway, Elgin, Illinois 60124, USA
All rights reserved.
Data is provided for the purpose of product description only, and must not be construed as warranted characteristics in the legal sense. The information does not relieve users from the duty of conducting their own evaluations and tests. Because the products are subject to continual improvement, we reserve the right to amend the product specifications contained in this catalogue.

Classification: 430.Cavity.…

BUCHER hydraulics

FLOW CONTROL VALVE PRESSURE COMPENSATED, FIXED ORIFICE, PRIORITY TYPE

WWW.SUMY.IR

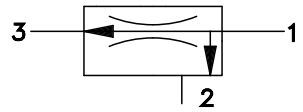

TORQUE:
Steel = 95/100 Ft–Lb. [129/136 Nm]
Aluminum = 70/75 Ft–Lb. [95/102 Nm]

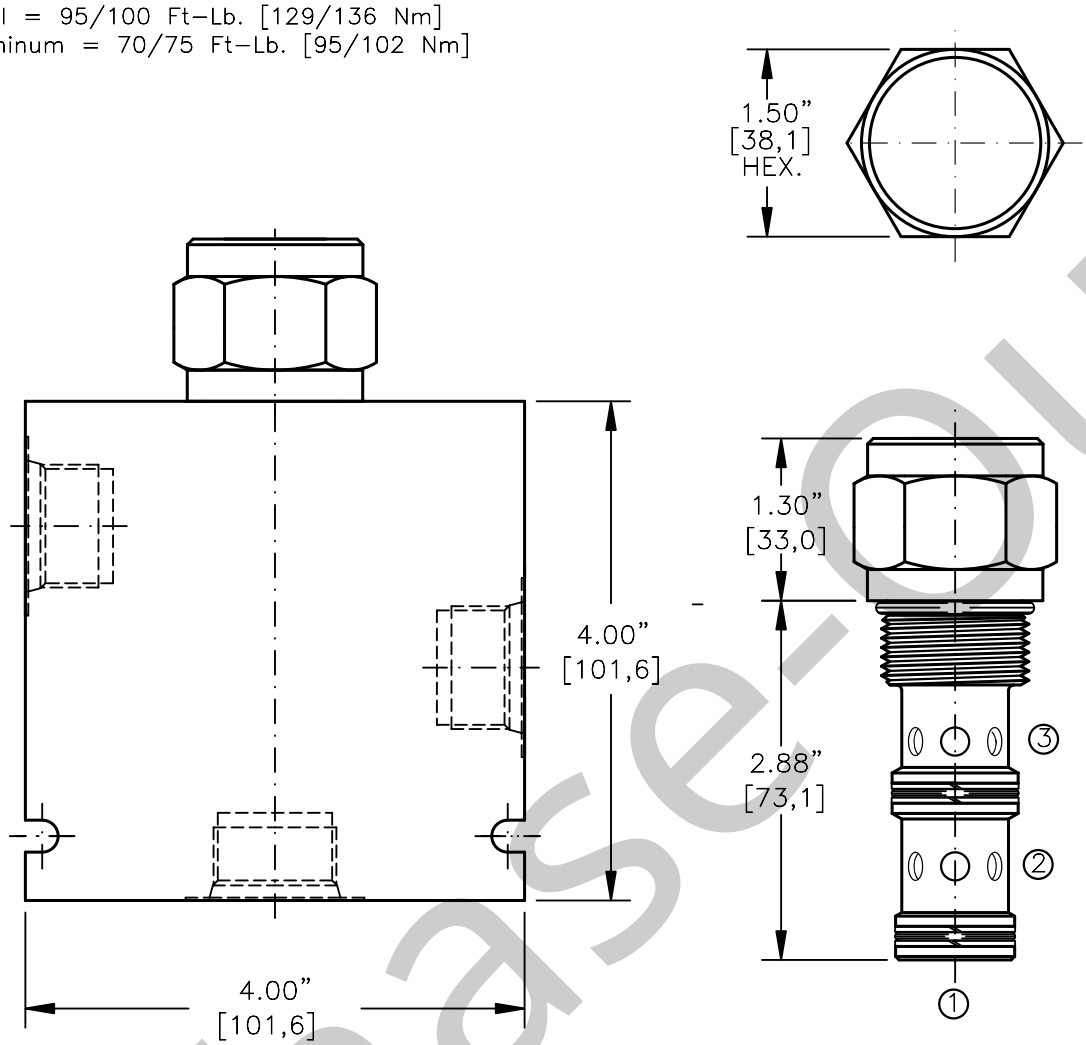

FOR ALUMINUM OR STEEL VALVE HOUSING CONFIGURATIONS SEE PAGE 0–034.1

BFCV–16–X–F–X–XX

BASIC

SIZE
16 = 1.312"–12 UNF

SEALS
N = BUNA "N"
V = VITON

ADJUSTMENT
F = FIXED (FACTORY SET)

PORTS
0 = CARTRIDGE ONLY
06BX = G 3/4" BSPP
08BX = G 1" BSPP
12TX = SAE – #12
16TX = SAE – #16
"A" – ALUM. HOUSING
"S" – STEEL HOUSING

REGULATED FLOW TO BE SPECIFIED
EXAMPLE
1.5=1.5 GPM (5,7l/m)

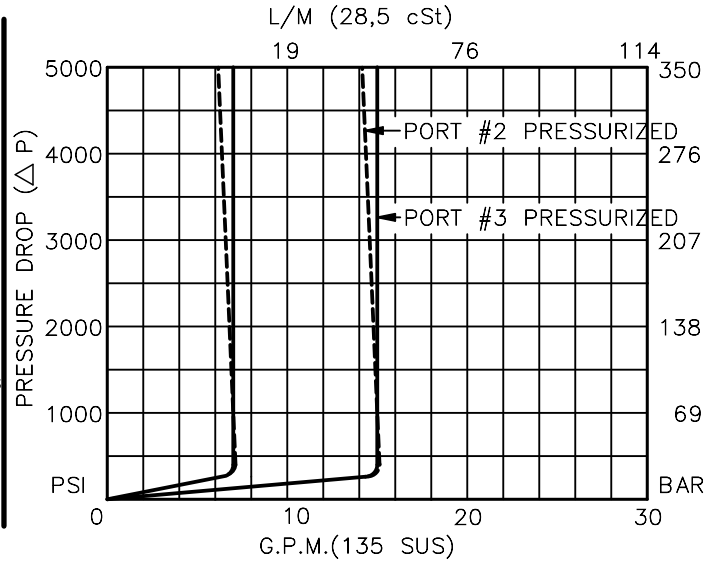

Phase-out

BUCHER hydraulics

WWW.SUMY.IR

FLOW CONTROL VALVE PRESSURE COMPENSATED, FIXED ORIFICE, PRIORITY TYPE

DESCRIPTION – FIXED

This unit is a SCREW IN, cartridge type, pressure compensated, fixed orifice, priority type hydraulic flow control valve.
FLOW RANGE: 0.5 TO 30.0 GPM [1,8 TO 114,0 L

OPERATIONS

Valve maintains constant flow from port 1 to 3 regardless of system pressure or load and excess flow is diverted to port 2. Flow from port 3 goes thru the control orifice to port 1 at non–compensated flow.

FEATURES AND BENEFITS

Valve is available with a fixed flow setting only.
All external carbon steel parts are plated for longer life against the elements.
All cartridge valves are 100% functionally tested.
Externally removable flow orifice disc.
Industry common cavity.

SPECIFICATIONS

OPERATING PRESSURE: 5,000 PSI (350 Bar)
PROOF PRESSURE: 10,000 PSI (700 Bar)
FLOW:0.5 to 30.0 GPM [1,8 to 114,0 l/m] nominal. See performance chart.
FLOW ACCURACY:
0.5 to 4.0 GPM [1,8 to 15,0 L??– 10.0%
4.0 to 16.0 GPM [15,0 to 60,0 L??– 7.5%
16.0 to 30.0 GPM [60,0 to 114,0 L??– 5.0%
VALVE HOUSINGS: 2500 PSI [175 Bar] = Aluminum – Anodized.
5000 PSI [350 Bar] = Steel – Unplated.
OPERATING TEMPERATURE: –40° to +250° F. [–40° to +120° C.]
OPERATING MEDIA: All general purpose hydraulic fluids such as MIL–H–5606, SAE–#10, SAE–#20, etc.
INSTALLATION: No restrictions.
SEAL KIT: SKN–1632 Buna "N".
SKV–1632 Viton.
WEIGHT: 1.40 lb [.64 kg] cartridge only.
VALVE CAVITY: #C1630, See Page 0–034.0.

info.el@bucherhydraulics.com www.bucherhydraulics.com/commoncavity

© 2015 by Bucher Hydraulics, Inc., 2545 Northwest Parkway, Elgin, Illinois 60124, USA
All rights reserved.
Data is provided for the purpose of product description only, and must not be construed as warranted characteristics in the legal sense. The information does not relieve users from the duty of conducting their own evaluations and tests. Because the products are subject to continual improvement, we reserve the right to amend the product specifications contained in this catalogue.

Phase-Out

BUCHER
hydraulics
WWW.SUMY.IR

General information
Cavity

Type series: MDD

Dimensions and sectional view

Beispiel für die Masseinheit:
Example for the dimensional units:
0.79 = 0.79 mm millimeter

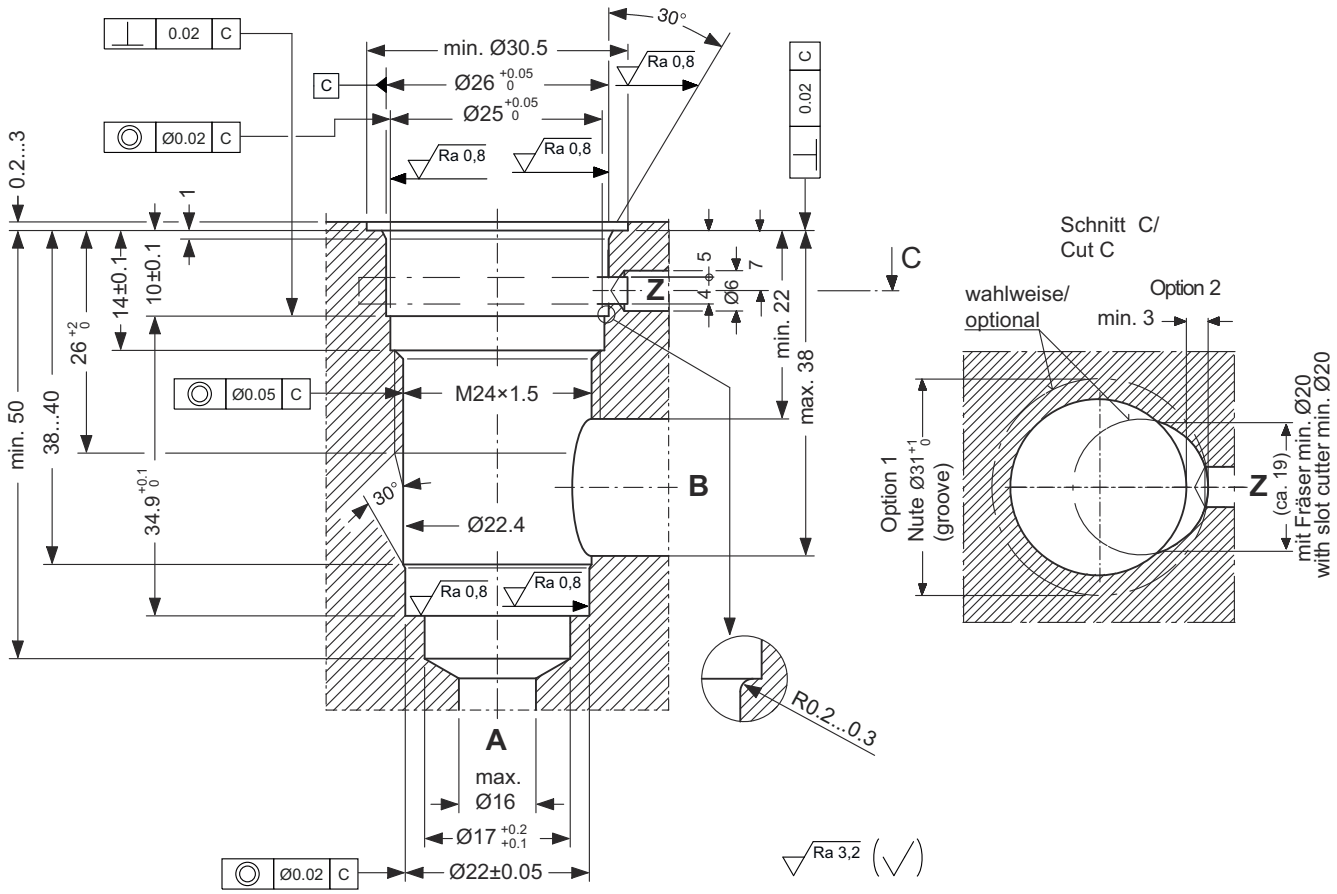

HINWEIS!
NOTE!

Die Bohrungsform MDD ist identisch mit der Bohrungsform DD, hat aber zusätzlich eine Nute beim Anschluss Z (Option 1 oder Option 2).
The MDD cavity is identical to the DD cavity, with an extra groove then added at port Z (machining options 1 or 2).

WWW.SUMY.IR

Installation information

ATTENTION!
You must maintain the specified positional and diametral tolerances. To ensure trouble-free operation of the screw-in cartridges, we strongly recommend that pilot drilling, boring, reaming and cavity thread-cutting are always performed in one setup.

NOTE!
Cavity type to factory standard.

IMPORTANT!
We offer form tool sets for sale or hire. See data sheet 400-P-040011 for further information.

info.ch@bucherhydraulics.com **www.bucherhydraulics.com**

© 2025 by Bucher Hydraulics AG Frutigen, 3714 Frutigen, Switzerland

All rights reserved.
Data is provided for the purpose of product description only, and must not be construed as warranted characteristics in the legal sense. The information does not relieve users from the duty of conducting their own evaluations and tests. Because the products are subject to continual improvement, we reserve the right to amend the product specifications contained in this catalogue.

-W Priorit Flow Control, 1 mm
Series MVR- D-1 ...

1 mm nom.
m x. 1 [b r]
QA m x. 6 [l/min]
QZ m x. 19 [l/min]

- Flow control cartridge for HTF cavity type MDD
- Priority flow control in 7 standard settings from 0,5 ... l/min
- Line mounting body HCAA available (see page 3)

DIMEN IONS

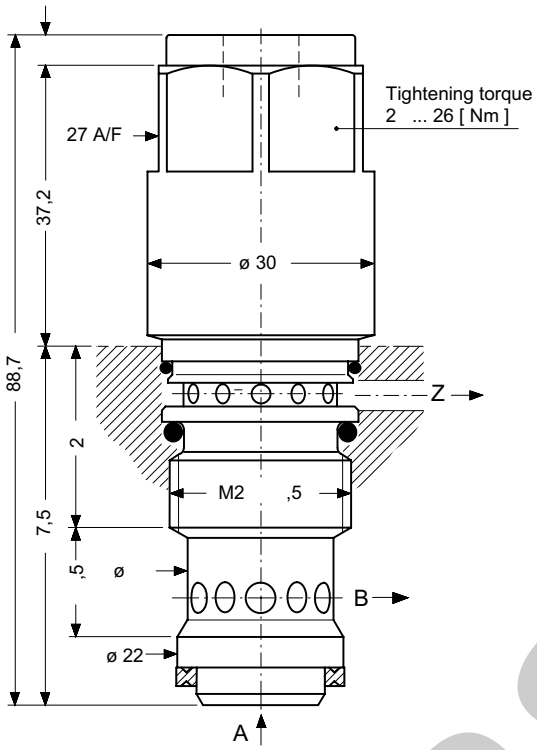

C vit t e MDD
see data sheet i 5.7

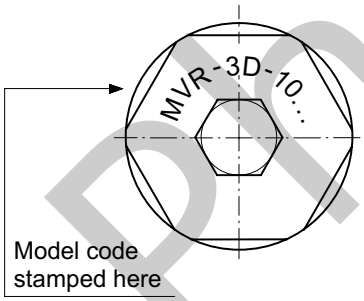

YMBOL

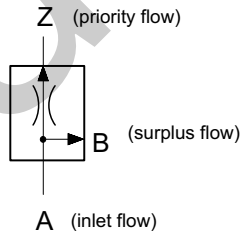

MVR 3D 0...

DE CRIPTION

The MVR 3D 0 ... priority flow control valve uses all available incoming flow to give priority to the achievement of a fi ed outflow at port Z.

Only when the inlet flow reaches, and then e ceeds, this level is any e cess made available at port B as surplus flow.

The outlet ports Z and B can be subjected to different pressures without affecting the priority flow control function.

The MVR 3D 0 ... priority flow control valve is a 3 way unit and is available with 7 fi ed settings for the outlet flow at port Z (QZ) (see Model Code Key).

The controlled outflow at port Z is influenced by the pressure difference Δp (pB - pZ) and by the inlet flow at port A (QA) see Performance Characteristics.

NOTE: If, for whatever reason, flow cannot leave from port Z, then the valve will also prevent flow from port B. If this possibility e ists in the proposed application, port A must be protected by a pressure relief valve.

PRINCIPAL CHARACTERI TIC

Type	3 way priority flow control valve
Design	spool
Mounting method	screw in cartridge
ize	0 mm nom. size, HTF cavity MDD
Mass	0,28 kg
Mounting attitude	unrestricted
Flow direction	A = inlet (supply flow) B = outlet (surplus flow) Z = controlled priority flow
Operating pressure	... 3 5 bar in A, B and Z

Fluids	hydraulic oils HL and HLP to DIN 5 52 other fluids contact HTF
Minimum fluid cleanliness	8 / to I O 06 / CETOP RP70H 8 ... to NA 638
Fluid temperature range	20° ... +60° C
Viscosity range	0 ... 300 c t
Flow rate QA ma .	60 l/min
Flow rate QZ ma .	l/min

M3Z-1 6
UBJECT TO CHANGE WITHOUT NOTICE

Phase Out

SCHEMATIC SECTION

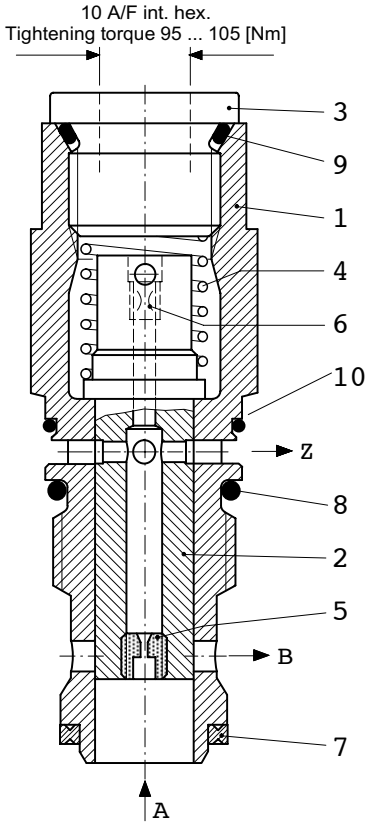

SERVICE PARTS

*) = part of seal kit no. DS-206
◢ = available as service part

It.	Qty.	Description		
1	1	Cartridge body	ø 30 x 84,7	
2	1	Control spool	ø 16 x 56	
3 ◢	1	Threaded plug	M20 x 1,5 DIN 908	
4 ◢	1	Spring	1,6 x 17 x 43,3	iG = 7,5
5 ◢	1	Orifice plug	M6 / ø **)	
6	1	Orifice plug	M4 / ø 0,3	
◢	1	Seal kit no. DS-206, comprising *):		
7	1*)	Seal	ø 22,1 / 17,1 x 2,5	
8	1*)	O-ring no. 117	ø 20,29 x 2,62	N90
9	1*)	O-ring no. 018	ø 18,77 x 1,78	N90
10	1*)	O-ring no. 020	ø 21,95 x 1,78	N90

**) Orifice ø - see Model Code Key

TO ORDER SERVICE PARTS, STATE:
- complete unit model code, including design number
- data sheet number, including issue date
- part item number from above list
- part description from above list
- quantity required

INSTALLATION AND SERVICING

MUST BE CARRIED OUT WITH CARE,
AND BY QUALIFIED PERSONNEL ONLY.

Use the correct tightening torque when fitting the cartridge.

When changing seals, the new seals must be thoroughly oiled or greased before fitting them to the valve.

Use the correct tightening torque when refitting the threaded plug item 3, for example, after a seal change.

PERFORMANCE CHARACTERISTICS (oil viscosity 33 cSt)

Priority flow Q_Z = 0,5 [l/min]

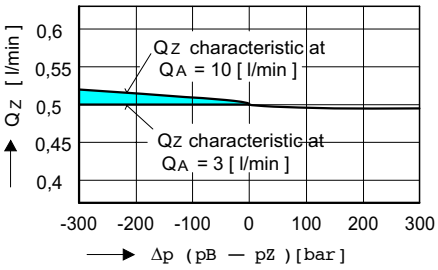

Priority flow Q_Z = 8 [l/min]

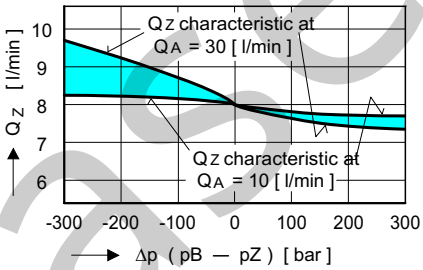

Priority flow Q_Z = 16 [l/min]

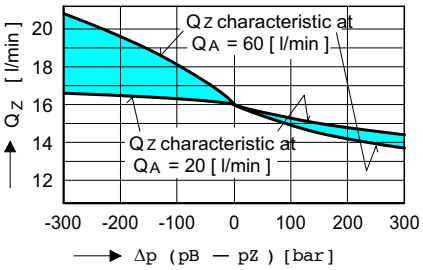

EXAMPLE: Priority flow = 8 l/min
Flow in at A (Q_A) = 30 l/min
Pressure at B (pB) = 200 bar
Pressure at Z (pZ) = 300 bar

Δp B → Z = 200 bar - 300 bar = - 100 bar
Priority flow from Qz characteristic = 8,7 l/min

MODEL CODE KEY

z.B. MVR - 3 D - 10 - 80 - _ - 1

Priority flow control
3 = 3-way design
D = for HTF cavity type MDD
10 = nominal size 10 mm

05	=	0,5 l/min	(orifice ø 0,6 mm)
20	=	2,0 l/min	(orifice ø 1,2 mm)
50	=	5,0 l/min	(orifice ø 1,7 mm)
80	=	8,0 l/min	(orifice ø 2,1 mm)
120	=	12,0 l/min	(orifice ø 2,4 mm)
160	=	16,0 l/min	(orifice ø 2,7 mm)
190	=	19,0 l/min	(orifice ø 3,0 mm)

Priority flow Q in Z (Qz) in 1/10 l/min
(for other values, contact HTF)

(blank) = Nitrile seals (**standard**)
V = Viton seals
For special seals, contact HTF

1...9 = design number (omit when ordering)

Phase-Out

M-16.50
SUBJECT TO CHANGE WITHOUT NOTICE

Line- and Flange Mounting Body, 10 mm
Type HCAA1

BUCHER hydraulics
WWW.SUMY.IR

- Ports BL, BR and Z = 3/4"-16 UNF - 2B
- Material: steel
- Surface treatment: A3C to DIN / ISO 4042
- Mass: 1.30 kg

DIMENSIONS

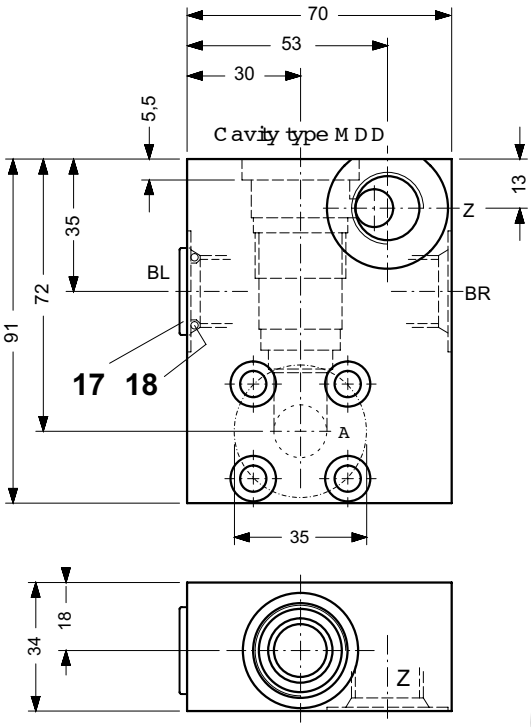

Cavity type MDD
see data sheet i -45.7

shown with
3-way priority flow control
MVR-3D-10 ... assembled

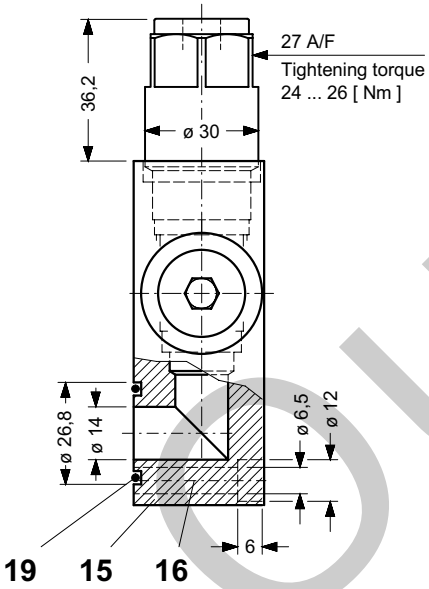

Supplied complete with one 3/4"-16 UNF plug and O-ring (items 17 and 18).
5/16" (7.9 mm) A/F internal hex.
Tightening torque Ma = 90 ... 110 Nm

SYMBOL

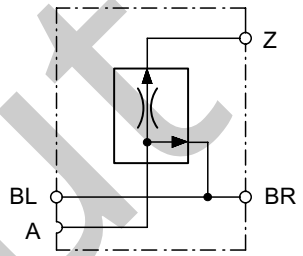

MVR-3D-10 ...
HCAA1

Supplied complete with four M6 × 35 hex. skt. cap hd. screws (it. 16).
Tightening torque Ma = 8 ... 10 Nm

DESCRIPTION

The HCAA1 line- and flange mounting body is intended for direct mounting on the outlet port of a hydraulic pump (see APPLICATION EXAMPLE).

Port Z is connected to the actuator requiring priority flow and surplus flow can be taken either from port BL or port BR.

SERVICE PARTS

◢ = available as service part

It.	Qty.	Description			
15	1	Line- & flg. mtg. body	type HCAA1		
16	4	Hex. skt. cap hd. screw	M6 x 35	8.8	DIN 912
17 ◢	1	Plug	3/4"-16 UNF		
18 ◢	1	O-ring	ø 17 x 2		N90
19 ◢	1	O-ring no. 118	ø 21,89 x 2,62		N90

APPLICATION EXAMPLE

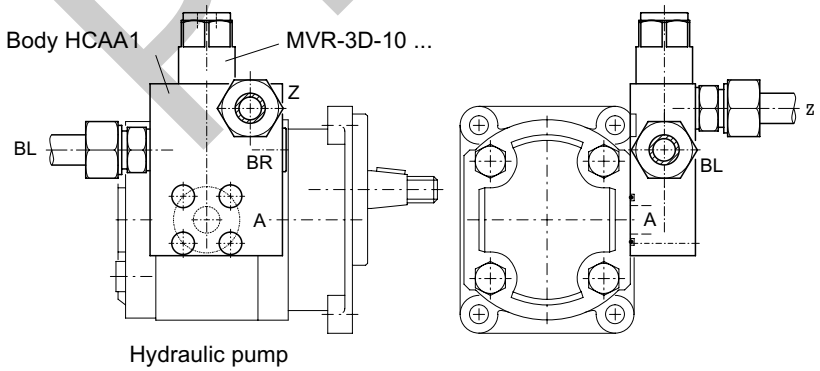

Hydraulic pump

Application suggestion: with steering pumps.
The provision of a priority flow in hydrostatic steering systems

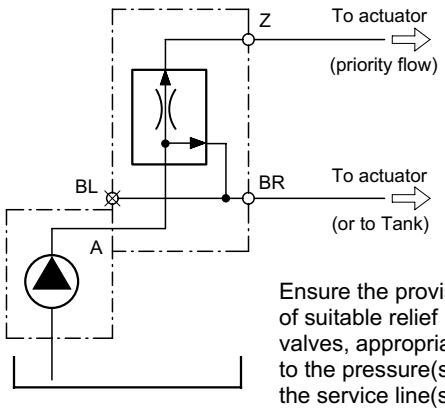

Ensure the provision of suitable relief valves, appropriate to the pressure(s) in the service line(s).

Phase-Out

M-16.50
G4Z-1741
SUBJECT TO CHANGE WITHOUT NOTICE

BUCHER hydraulics
WWW.SUMY.IR

Flow valve
Flow control valve

Q_{max} = 100 l/min, p_{max} = 315 bar
load-compensated, spool type, mechanical operation
Type series: SRCB-H-3

- Screw-in cartridge valve
- ZnNi plating (720h DIN EN ISO 9227 NSS)
- 3-way flow control valve
- Compact construction
- Flow rates are unaffected by changes in temperature and load

Description

The flow control valve, series SRCB-H-3 is a mechanical operated, load compensated screw-in valve with an M42x1.5 mounting thread. This valve is used to set the working speed of hydraulic actuators, the setting being load-independent. The higher pressure can be at either the constant flow (port A) or surplus flow port (port B). When used as a 2-way flow control, omit the surplus-flow drilling, or plug it. The special orifice design ensures that the flow setting is largely independent of the viscosity of the fluid. The cartridge design allows the valve to be installed in any customized control block. All external parts of the screw-in valve are zinc-nickel plated and are thus suitable for use in the harshest operating environments.

Symbol

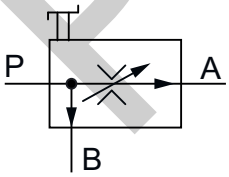

Phase-Out

WWW.SUMY.IR

Technical data

General characteristics	Description, value, unit
Product status	Phase-Out
Function group	Flow valve
Function	Flow control valve
Design	Screw-in cartridge valve
Controls	mechanical operation
Characteristic	load-compensated, spool type
Neutral position	closed orifice
MTTFd value	150 years
Thread size	M42×1,5
Mounting attitude	unrestricted
Tightening torque aluminium	50 Nm
Minimum ambient temperature	- 30 °C
Maximum ambient temperature	+ 50 °C
Surface protection	ZnNi plating (720h DIN EN ISO 9227 NSS)
Sealing material	FKM (fluorocarbon rubber / VITON) seals

Hydraulic characteristics	Description, value, unit
Maximum operating pressure	315 bar
Maximum flow rate	100 l/min
Control flow range	10, 16, 25, 32, 40, 50, 63, 80 l/min
Flow direction	see symbol
Hydraulic fluid	HL and HLP mineral oil according to DIN 51 524; other fluids on request!
Minimum fluid temperature	- 20 °C
Maximum fluid temperature	+ 80 °C
Viscosity range	10 ... 300 mm^2/s (cSt)
Minimum fluid cleanliness (cleanlineless class according to ISO 4406:1999)	class 20/18/15
Min. pressure difference (pressure compensator)	7 bar
Control accuracy (related to the nominal flow rate)	Load-dependency when under pressure: max. ± 2.5 % 1)
Internal leakage flow rate	max. 100 cm^3/min at 100 bar 1)

NOTE!
Values refer to an oil viscosity of 35mm^2/ [cSt].

NOTE!
Control accuracy depends on th selected flow range.

NOTE!
For other values please contact Bucher Hydraulics.

Phase-Out

Performance graphs

measured with oil viscosity 35.0 mm²/s (cSt)

Q = f (pl) Flow rate load-pressure

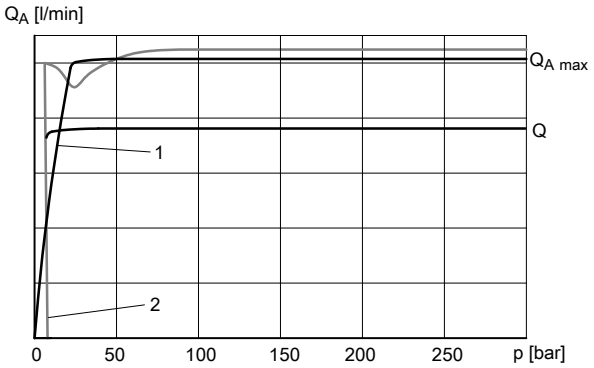

1 = Q_A - Constant flow pressurised
2 = Q_B - Surplus flow pressurised

Δp = f (Q) Pressure drop-flow rate characteristic

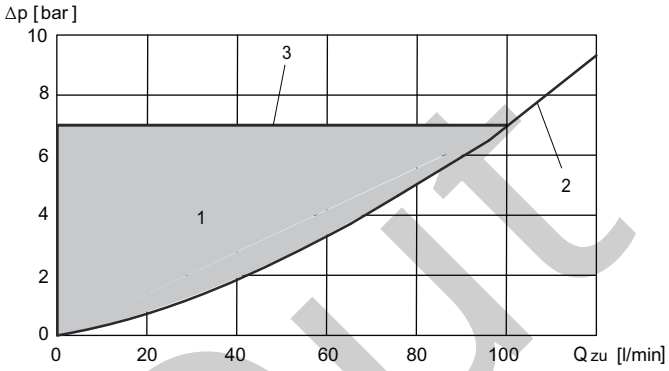

1 = Pressure loss area (The actual pressure-loss characteristic is dependent on the tank pressure at port B)
2 = Control valve throttlingcurve (Dependent on applied body)
3 = Control Δp - characteristic 7 bar

Dimensions and sectional view

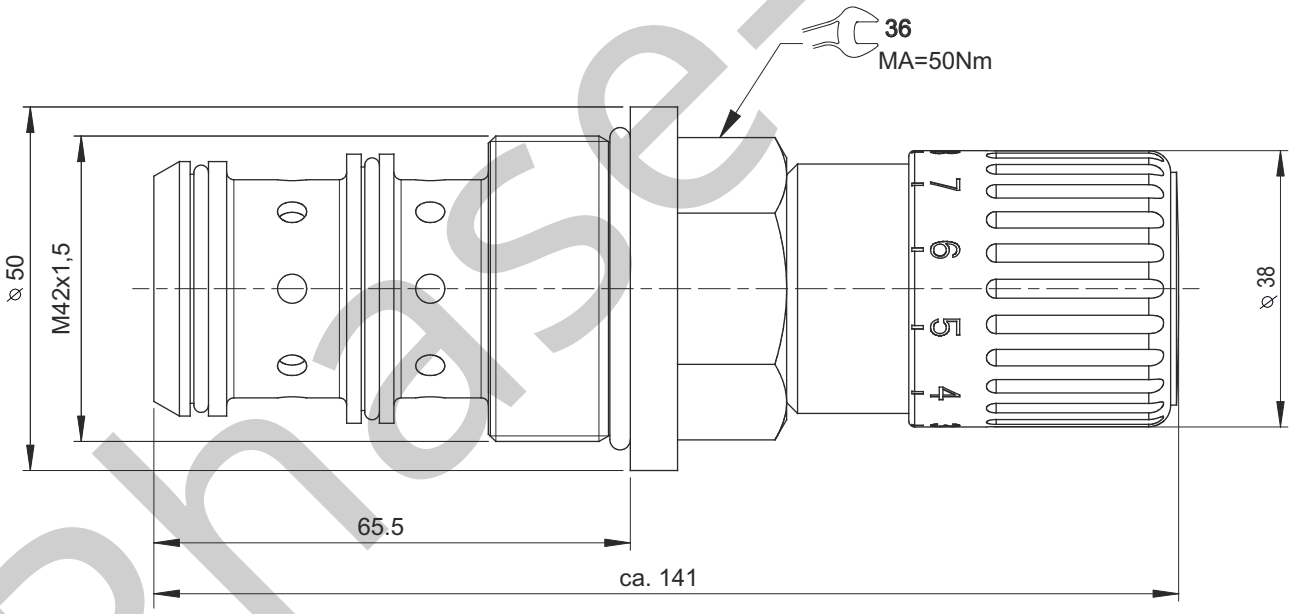

Phase-Out

WWW.SUMY.IR

Installation information

ATTENTION!
Expert and product knowledge is required for the layout of this valve type. Use exclusively for the intended purpose within the indicated values. The valve manufacturer must be consulted for use of the appliance outside the specifications. All applications must be verified by sufficient tests to ensure safety in the application. The ultimate responsibility for safety during installation and use resides with the end appliance manufacturer.
All limit values listed in the data sheet apply to typical mobile hydraulic applications with a max. rate of pressure rise of 4000 bar (higher values after consultation).

ATTENTION!
Only qualified personnel with mechanical skills may carry out any maintenance work. Generally, the only work that should ever be undertaken is to check, and possibly replace, the seals. When changing seals, oil or grease the new seals thoroughly before fitting them.

NOTE!
When fitting the screw-in cartridge valve, use the specified tightening torque. The value can be found in the chapter "Technical data".
We offer form tool sets for sale or hire.
Description: 1835 A D32 (Id. No.: 100603875).

NOTE!
Bleed all air from the system (if possible, operate valve several times without load).

Ordering code

SR C B 032 H 3 - 1 / ☐

SR	=	Flow control valve	
C	=	Cartridge	
B	=	Size	
010	=	Constant flow range	10 l/min
016	=	Constant flow range	16 l/min
025	=	Constant flow range	25 l/min
032	=	Constant flow range	32 l/min
040	=	Constant flow range	40 l/min
050	=	Constant flow range	50 l/min
063	=	Constant flow range	63 l/min
080	=	Constant flow range	80 l/min
H	=	Operation via hand controller	
3	=	3-way flow control valve	
1...9	=	Design stage (to be inserted by the factory)	
		Options (to be inserted by the factory)	

Related data sheets

Reference	Description
100-P-400971	Cavity GB3NM42

Phase-Out

WWW.SUMY.IR

Phase-Out

info.de@bucherhydraulics.com **www.bucherhydraulics.com**

© 2025 by Bucher Hydraulics GmbH, 79771 Klettgau, Germany

All rights reserved.
Data is provided for the purpose of product description only, and must not be construed as warranted characteristics in the legal sense. The information does not relieve users from the duty of conducting their own evaluations and tests. Because the products are subject to continual improvement, we reserve the right to amend the product specifications contained in this catalogue.

BUCHER hydraulics

WWW.SUMY.IR

Flow valve
Flow control valve

Q_{max} = 100 l/min, p_{max} = 315 bar
direct acting, load-compensated, proportional solenoid with emergency override
Type series: SRCB-SNT-3

- Screw-in cartridge valve
- ZnNi plating (720h DIN EN ISO 9227 NSS)
- The slip-on coil can be rotated, and it can be replaced without opening the hydraulic envelope
- 3-way flow control valve
- Flow rates are unaffected by changes in temperature and load
- Compact construction
- Various plug-connector systems and voltages are available

Description

The flow control valve, series SRCB-SNT-3 is a direct acting, load compensated screw-in valve with an M42x1.5 mounting thread. This valve is used to set the working speed of hydraulic actuators, the setting being load-independent. The higher pressure can be at either the constant flow (port A) or surplus flow port (port B). The special orifice design ensures that the flow setting is largely independent of the viscosity of the fluid. The cartridge design allows the valve to be installed in any customized control block. All external parts of the screw-in valve are zinc-nickel plated and are thus suitable for use in the harshest operating environments. The slip-on coil can be replaced without opening the hydraulic envelope and can be positioned at any angle through 360°.

Symbol

SRCB-S-3

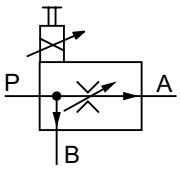

SRCB-N-3
SRCB-T-3

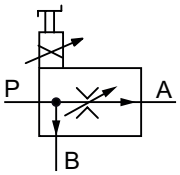

Technical data

General characteristics	Description, value, unit
Function group	Flow valve
Function	Flow control valve
Design	Screw-in cartridge valve
Controls	proportional solenoid with emergency override
Characteristic	direct acting, load-compensated
Neutral position	closed orifice
MTTFd value	150 years
Thread size	M42×1,5
Mounting attitude	unrestricted, preferably vertical, coil down (automatic air bleed)
Tightening torque aluminium	50 Nm
Minimum ambient temperature	- 30 °C
Maximum ambient temperature	+ 50 °C
Surface protection	ZnNi plating (720h DIN EN ISO 9227 NSS)
Sealing material	FKM (fluorocarbon rubber / VITON) seals

Hydraulic characteristics	Description, value, unit
Maximum operating pressure	315 bar
Maximum flow rate	100 l/min [1)]
Control flow range	10, 16, 25, 32, 40, 50, 63, 80 l/min [1)]
Flow direction	see symbol
Hydraulic fluid	HL and HLP mineral oil according to DIN 51 524; other fluids on request!
Minimum fluid temperature	- 20 °C
Maximum fluid temperature	+ 80 °C
Viscosity range	10 ... 300 mm^2/s (cSt)
Minimum fluid cleanliness (cleanlineless class according to ISO 4406:1999)	class 20/18/15
Min. pressure difference (pressure compensator)	7 bar
Control accuracy (as a % of the nominal flow)	Load-dependency when under pressure: max. ± 2.5 % [2)] Hysteresis when operated: max. ± 3.5 % [2)]
Internal leakage flow rate	max. 100 cm^3/min at 100 bar [1)]

NOTE!
1) Values refer to an oil viscosity of 35 mm^2/s (cSt).
2) Values refer to the selected flow range.

NOTE!
For other values please contact Bucher Hydraulics.

Electric characteristics	Description, value, unit
Solenoid coils type	D45/22
Features solenoid coil	pressure-tight, switching in oil
Supply voltage DC	12/24 V DC (from an electronic controller)
Nominal power consumption	21 W with 12 V coil and Imax = 2,3 A 21 W with 24 V coil and Imax = 1,15 A
Relative duty cycle (ED)	100 % bei Imax
Recommended PWM frequency	100 Hz (observe Imax)
Electrical connection coil	several connection types available, see ordering code
Protection class solenoid coil to ISO 20 653 / EN 60 529	several classes of protection available, see ordering code (with appropriate mating connector and proper fitting and sealing)

NOTE!
For other values please contact Bucher Hydraulics.

Performance graphs

measured with oil viscosity 35.0 mm²/s (cSt)

Q = f (%; mA) Flow rate adjustment characteristic

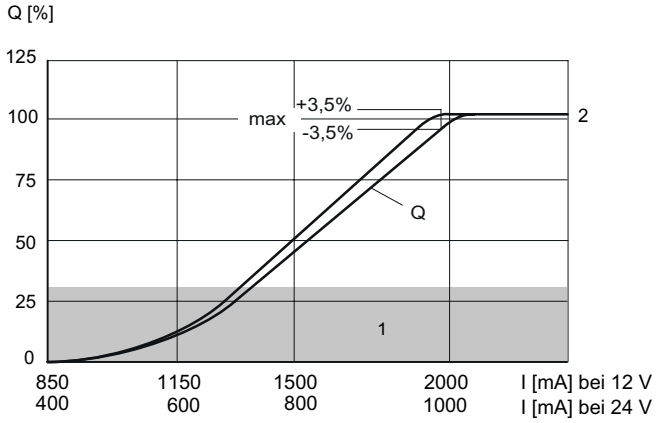

1 = Fine control range
2 = 100% = 2000 ± 200 mA bei 12 V DC
1000 ± 100 mA bei 24 V DC
(100%- values vary with nominal flow rate)

Q = f (pl) Flow rate load-pressure

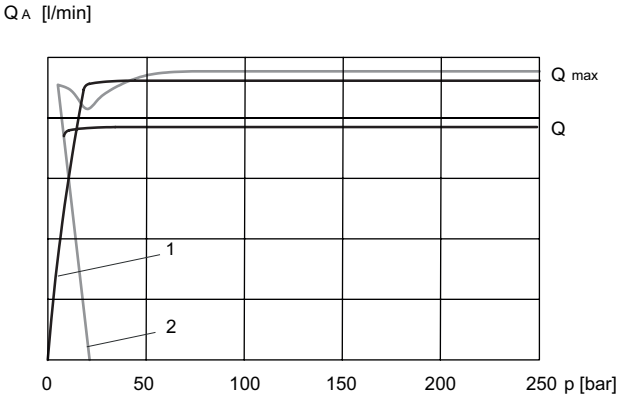

1 = Q_A - Constant flow pressurised
2 = Q_B - Surplus flow pressurised

Δp = f (Q) Pressure drop-flow rate characteristic

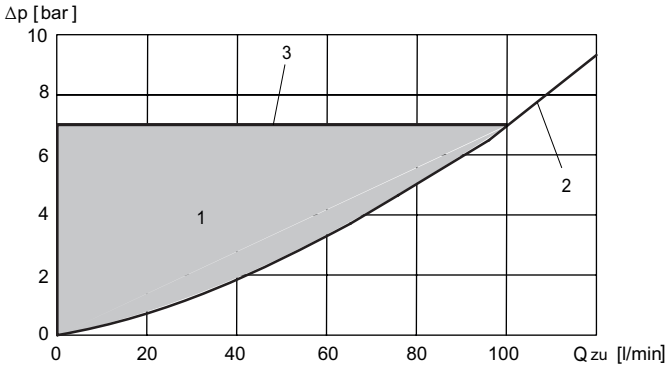

1 = Pressure loss area (The actual pressure-loss characteristic is dependent on the tank pressure at port B)
2 = Control valve throttlingcurve (Dependent on applied body)
3 = Control Δp - characteristic 7 bar

Dimensions and sectional view

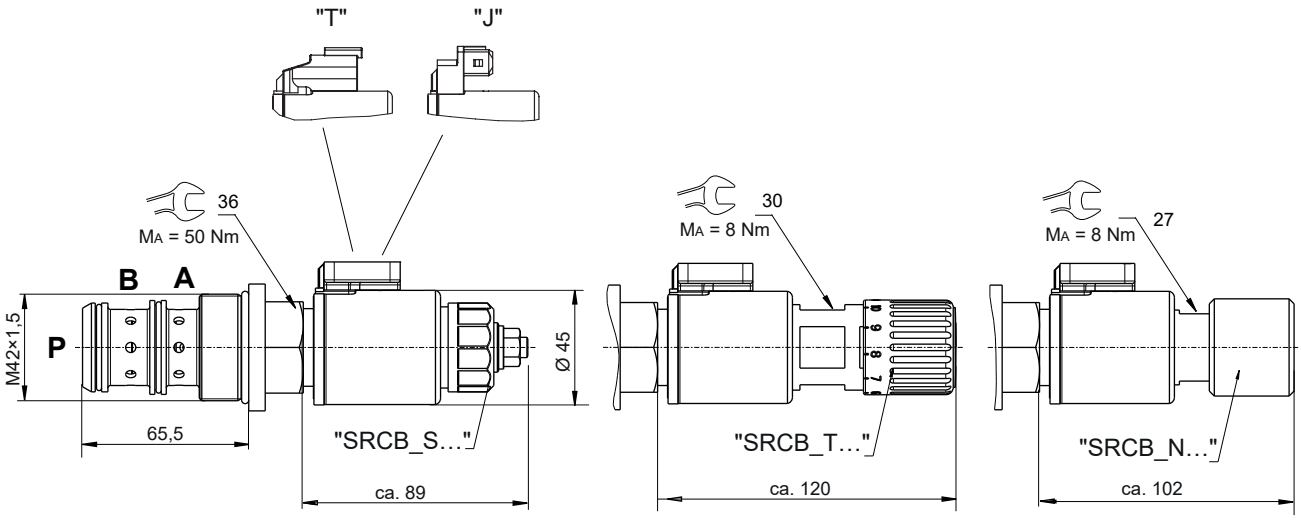

Installation information

ATTENTION!
Expert and product knowledge is required for the layout of this valve type. Use exclusively for the intended purpose within the indicated values. The valve manufacturer must be consulted for use of the appliance outside the specifications. All applications must be verified by sufficient tests to ensure safety in the application. The ultimate responsibility for safety during installation and use resides with the end appliance manufacturer. All limit values listed in the data sheet apply to typical mobile hydraulic applications with a max. rate of pressure rise of 4000 bar (higher values after consultation).

ATTENTION!
Only qualified personnel with mechanical skills may carry out any maintenance work. Generally, the only work that should ever be undertaken is to check, and possibly replace, the seals. When changing seals, oil or grease the new seals thoroughly before fitting them.

NOTE!
When fitting the screw-in cartridge valve, use the specified tightening torque. The value can be found in the chapter "Technical data". We offer form tool sets for sale or hire. Description: 1835 A D32 (Id. No.: 100603875).

NOTE!
Bleed all air from the system (if possible, operate valve several times without load).

Models of the emergency override

Emergency pin SRCB....S..

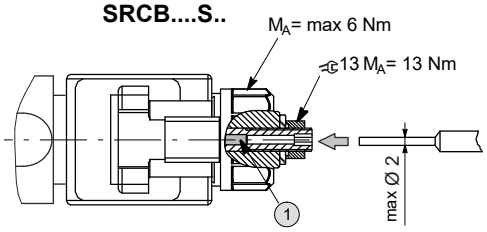

By pressing the solenoid pin (1) you operate the valve On/Off.

Basic manual override SRCB....N..

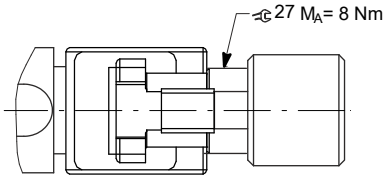

Q_0 to Q_{max} = approx. 3,5 turns at the handle

Basic manual override SRCB....T..

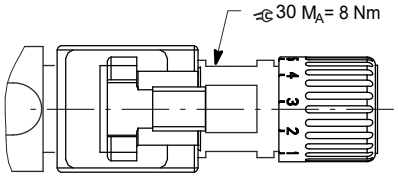

Q_0 to Q_{max} = approx. 1 turn at the handle

Application examples

Possible applications can be:
- Belt drives- Spinner
- Plate drives
- Auger drives
- Brush drives
- Reel drives
- Pump drives for other liquids
- Fans, blowers
- ...

Ordering code

SR C B 032 N 3 - 1 J 12 / [ ]

SR = Flow control valve

C = Cartridge

B = Size

010 = Constant flow range 10 l/min
016 = Constant flow range 16 l/min
025 = Constant flow range 25 l/min
032 = Constant flow range 32 l/min
040 = Constant flow range 40 l/min
050 = Constant flow range 50 l/min
063 = Constant flow range 63 l/min
080 = Constant flow range 80 l/min

Type of operator

S = Proportional solenoid + emergency pin
N = Proportional solenoid + basic manual override
T = Proportional solenoid + deluxe manual override

3 = 3-way flow control valve

1...9 = Design stage (to be inserted by the factory)

Plug connector

J = AMP Junior Timer (IP65)
T = Deutsch plug DT04-2P-EP04 (IP 67)

12 = Proportional solenoid supply voltage DC 12 Volt
24 = Proportional solenoid supply voltage DC 24 Volt

Options (to be inserted by the factory)

Related data sheets

Reference	Description
100-D-400971	Cavity GB3NM42

info.de@bucherhydraulics.com

© 2024 by Bucher Hydraulics GmbH, 79771 Klettgau, Germany

All rights reserved.
Data is provided for the purpose of product description only, and must not be construed as warranted characteristics in the legal sense. The information does not relieve users from the duty of conducting their own evaluations and tests. Because the products are subject to continual improvement, we reserve the right to amend the product specifications contained in this catalogue.

BUCHER hydraulics

ELECTRO–HYDRAULIC, PROPORTIONAL, PRIORITY, PRESSURE COMP, FLOW CONTROL VALVE.

WWW.SUMY.IR

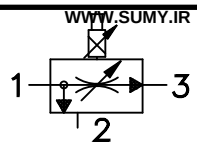

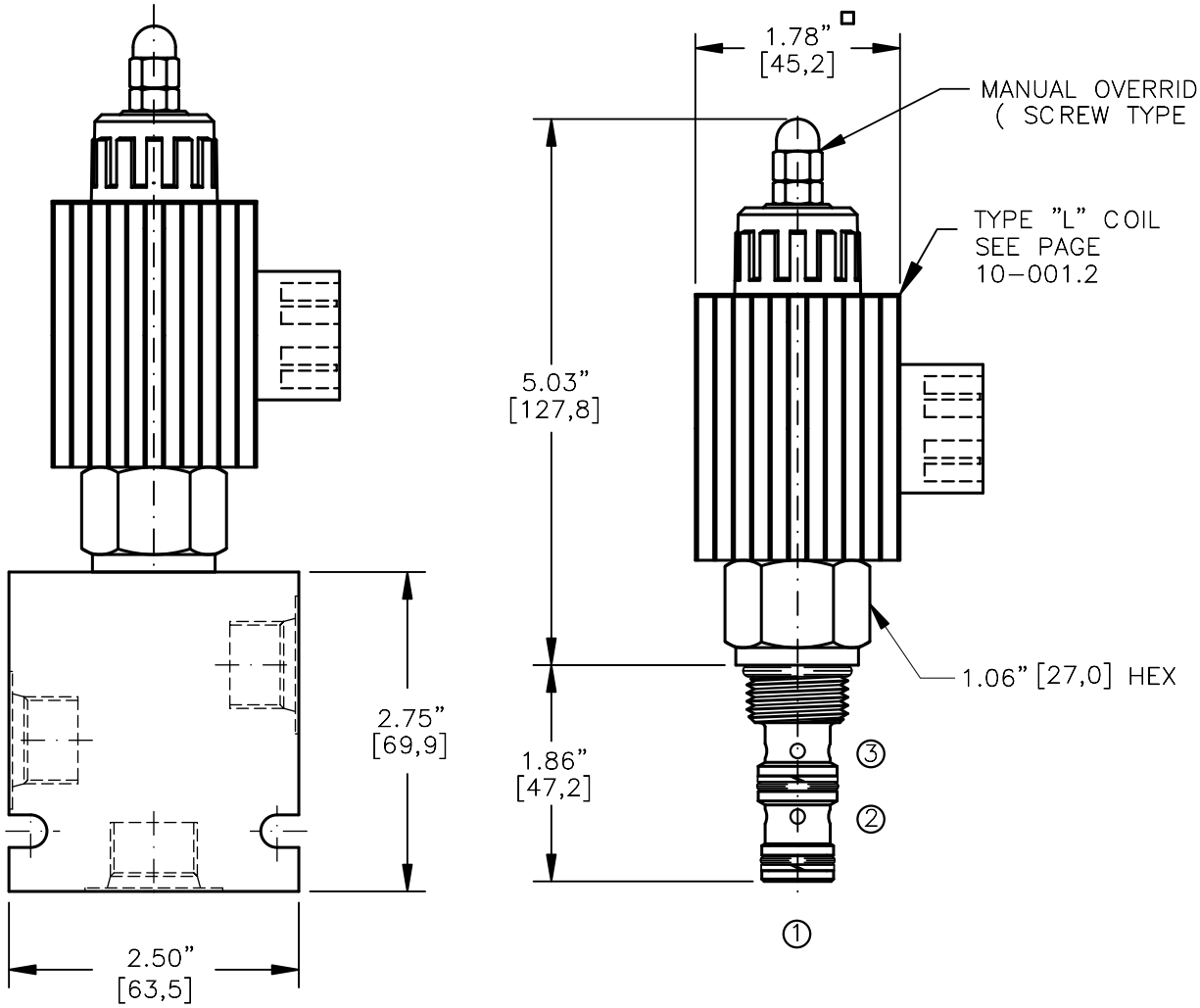

TORQUE:

Steel = 55/60 Ft–Lb. [74/81 Nm]
Aluminum = 35/40 Ft–Lb. [47/54 Nm]

EPFB–10–X–X–XX–X–X–XXX X

- BASIC
- SIZE: 10=0.875"–14UNF
- SEALS: N = BUNA "N"; V = VITON
- STYLE: C = NORMALLY CLOSED; O = NORMALLY OPEN
- REGULATED FLOW: 04 = 0 TO 4.0 GPM; 08 = 0 TO 8.0 GPM
- PORTS: 0 = CARTRIDGE; 2BX = G 1/4" BSPP; 3BX = G 3/8" BSPP; 6TX = SAE – #6; 8TX = SAE – #8
- "A" – ALUM. HOUSING; "S" – STEEL HOUSING
- ADJUSTMENT OPTIONS: 0 = NONE; M = MANUAL OVERRIDE
- VOLTAGE / AMPS: 12D = 12 VDC 3.00; 24D = 24 VDC 1.50
- TERMINALS: L=18GA. 24" LEADS; T=SPADE TERM.; B=BOLT TERM.; G=DIN43650; W=WEATHER–PACK; D=DEUTSCH–DT04–2P; M=METRI–PACK CONN

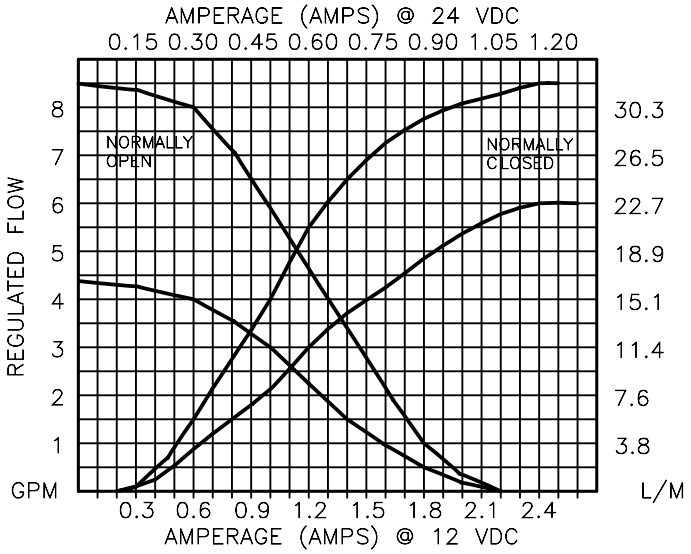

BUCHER hydraulics

WWW.SUMY.IR

PROPORTIONAL, PRIORITY TYPE, PRESSURE COMP, FLOW CONTROL VALVE.

DESCRIPTION

This valve is a cartridge style, electro–hydraulic, proportional, priority (BY–PASS) type, pressure compensated, hydraulic flow control. Regulated flow 8.0 GPM [30,3 L/M] max. is proportional to the current input regardless of load or system pressure. After the priority flow is satisfied the excess flow is diverted to a secondary circuit or to tank. Maximum inlet flow is 10.0 GPM [37,9 L/M].

OPERATIONS

This unit is a direct acting (NO PILOT FLOW), electro hydraulic, proportional, pressure compensated flow control valve. When the coil is energized, the armature moves the metering orifice open against a precision bias spring varying the flow. A pressure compensator spool (HYDROSTAT) modulates the flow at 100 PSI/6,9 Bar delta "P" providing the valve with a constant regulated flow regardless of load or system pressure. For the normally closed product when the current is increased to the coil, the flow will increase. For the normally open product as the current is increased to the coil the flow will decrease. IN THE EVENT OF POWER FAILURE, THE NORMALLY CLOSED VALVE WILL CLOSE AND THE NORMALLY OPEN VALVE WILL OPEN.

FEATURES AND BENEFITS

Continuous–duty, very low heat rise & waterproof solenoid coil.
Interchangeable solenoid coils & termination options available.
Hardened precision fitted spool & sleeve provides reliable, long life.
Very efficient wet – armature solenoid core tube construction.
All external parts are zinc plated for longer life against elements.
All cartridge valves are 100% functionally tested.

BUCHER hydraulics

WWW.SUMY.IR

PROPORTIONAL, PRIORITY TYPE, PRESSURE COMP, FLOW CONTROL VALVE.

SPECIFICATIONS

OPERATING PRESSURE: 5,000 PSI [350 Bar]
PROOF PRESSURE: 10,000 PSI [700 Bar]
REGULATED FLOW: 8.0 GPM [30,3 l/m] Max. See performance chart.
INTERNAL LEAKAGE: 20 cu.in/min [328 cc/m] @ 5,000 PSI [350 Bar]
VALVE HOUSINGS: 2500 PSI [175 Bar] = Aluminum – Anodized.
5000 PSI [350 Bar] = Steel – Unplated.
OPERATING TEMPERATURE: –40° to +250° F. [–40° to +120° C.]
OPERATING MEDIA: All general purpose hydraulic fluids such as MIL–H–5606, SAE–#10, SAE–#20, etc.
RESPONSE: The most efficient method to control this valve is with current control and a 50 Hz dither.
POWER REQUIREMENTS: 12 VDC, Operating current 0.2 to 2.2 AMPS.
24 VDC, Operating current 0.1 to 1.1 AMPS.
SEAL KIT: SKN–1032 Buna "N"
SKV–1032 Viton
INSTALLATION: No restrictions.
WEIGHT: 1.93 lb [0,90 kg] cartridge with coil only.
VALVE CAVITY: #C1030, See Page 0–032.0.

info.el@bucherhydraulics.com www.bucherhydraulics.com/commoncavity

© 2015 by Bucher Hydraulics, Inc., 2545 Northwest Parkway, Elgin, Illinois 60124, USA
All rights reserved.
The technical information in this catalog, may contain calculated figures (for reference only) and not actual performance data for this product. Data is provided for the purpose of product description only, and must not be construed as warranted characteristics in the legal sense. The information does not relieve users from the duty of conducting their own evaluations and tests. Because the products are subject to continual improvement, we reserve the right to amend the product specifications contained in this catalogue.

BUCHER hydraulics

ELECTRO–HYDRAULIC, PROPORTIONAL, PRIORITY, PRESSURE COMP, FLOW CONTROL VALVE.

WWW.SUMY.IR

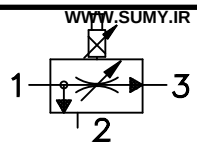

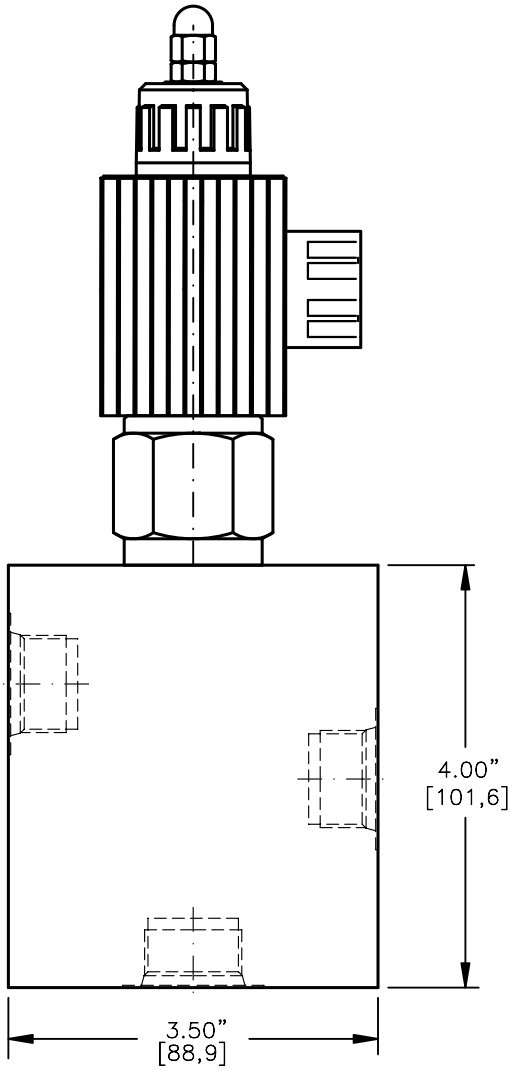

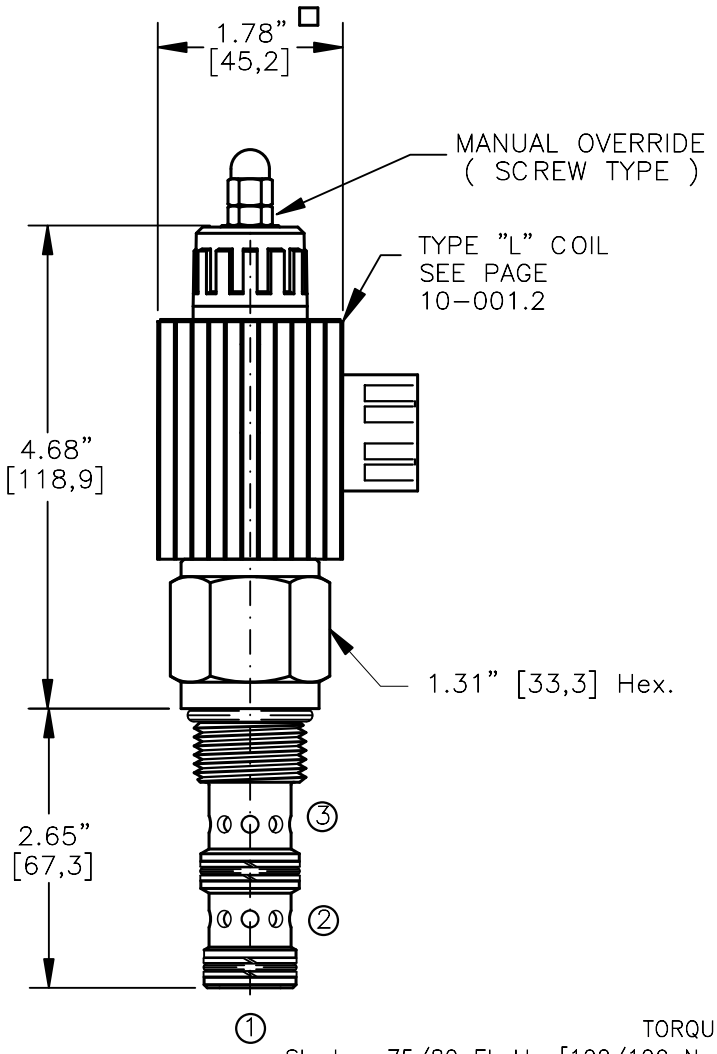

TORQUE
Steel = 75/80 Ft–Lb. [102/109 Nm]
Aluminum = 55/60 Ft–Lb. [74/81 Nm]

EPFB–12–X–X–XX–X–X–XXX X

BASIC

SIZE
12 = 1.062"–12UNF

SEALS
N = BUNA "N"
V = VITON

STYLE
C = NORMALLY CLOSED
O = NORMALLY OPEN

REGULATED FLOW
05 = 0 TO 5.0 GPM
10 = 0 TO 10.0 GPM
15 = 0 TO 15.0 GPM

PORTS
0 = CARTRIDGE ONLY
04BX = G 1/2"–14 BSPP
06BX = G 3/4"–14 BSPP
10TX = SAE – #10
12TX = SAE – #12

"A" = ALUM. HOUSING
"S" = STEEL HOUSING

ADJUSTMENT OPTIONS
0 = NONE
M = MANUAL OVERRIDE

VOLTAGE AMPS
12D = 12 VDC 3.00
24D = 24 VDC 1.50

TERMINALS
L =18GA. 24" LEADS
T =SPADE TERM.
B =BOLT TERM.
G =DIN43650
W =WEATHER–PACK
D =DEUTSCH–DT04–2P
M =METRI–PACK CONN.

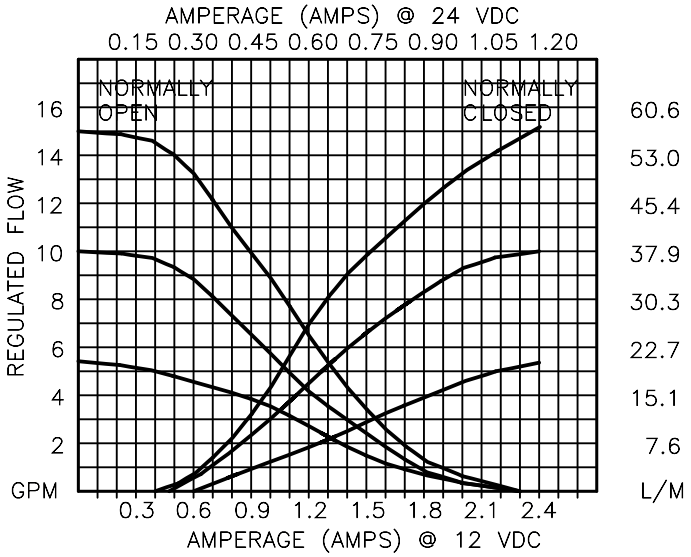

BUCHER hydraulics

WWW.SUMY.IR

PROPORTIONAL, PRIORITY TYPE, PRESSURE COMP, FLOW CONTROL VALVE.

DESCRIPTION

This valve is a cartridge style, electro-hydraulic, proportional, priority (BY-PASS) type, pressure compensated, hydraulic flow control. Regulated flow 15.0 GPM [56,8 L/M] max. is proportional to the current input regardless of load or system pressure. After the priority flow is satisfied the excess flow is diverted to a secondary circuit or to tank. Maximum inlet flow is 26.0 GPM [98,4 L/M].

OPERATIONS

This unit is a direct acting (NO PILOT FLOW), electro hydraulic, proportional, pressure compensated, flow control valve. When the coil is energized the armature moves the metering orifice open against a precision bias spring varying the flow. A pressure compensator spool (HYDROSTAT) modulates the flow at 100 PSI/6,9 Bar delta "P" providing the valve with a constant regulated flow regardless of load or system pressure. When current is increased to the coil the flow will increase, as the current is decreased the flow will decrease proportionally.
IN THE EVENT OF POWER FAILURE THE VALVE WILL CLOSE.

FEATURES AND BENEFITS

Continuous-duty, very low heat rise & waterproof solenoid coil.
Interchangeable solenoid coils & termination options available.
Hardened precision fitted spool & sleeve provides reliable, long life.
Very efficient wet - armature solenoid core tube construction.
All external carbon steel parts are plated for longer life against the elements.
All cartridge valves are 100% functionally tested.

BUCHER hydraulics

WWW.SUMY.IR

PROPORTIONAL, PRIORITY TYPE, PRESSURE COMP, FLOW CONTROL VALVE.

SPECIFICATIONS

OPERATING PRESSURE: 5,000 PSI [350 Bar]
PROOF PRESSURE: 10,000 PSI [700 Bar]
REGULATED FLOW: 15.0 GPM [56,7 l/m] Max. See performance chart.
INTERNAL LEAKAGE: 20 cu.in/min [330 cc/m] @ 5,000 PSI [350 Bar]
VALVE HOUSINGS: 2500 PSI [175 Bar] = Aluminum – Anodized.
5000 PSI [350 Bar] = Steel – Unplated.
OPERATING TEMPERATURE: –40° to +250° F. [–40° to +120° C.]
OPERATING MEDIA: All general purpose hydraulic fluids such as MIL–H–5606, SAE–#10, SAE–#20, etc.
RESPONSE: The most efficient method to control this valve is with current control and a 50 Hz dither.
POWER REQUIREMENTS: 12 VDC, Operating current 0.2 to 2.2 AMPS.
24 VDC, Operating current 0.1 to 1.1 AMPS.
SEAL KIT: SKN–1232 Buna "N"
SKV–1232 Viton
INSTALLATION: No restrictions.
WEIGHT: 2.66 lb [1,20 kg] cartridge with coil only.
VALVE CAVITY: #C1230, See Page 0–033.0.

info.el@bucherhydraulics.com

www.bucherhydraulics.com/commoncavity

© 2015 by Bucher Hydraulics, Inc., 2545 Northwest Parkway, Elgin, Illinois 60124, USA
All rights reserved.
The technical information in this catalog, may contain calculated figures (for reference only) and not actual performance data for this product. Data is provided for the purpose of product description only, and must not be construed as warranted characteristics in the legal sense. The information does not relieve users from the duty of conducting their own evaluations and tests. Because the products are subject to continual improvement, we reserve the right to amend the product specifications contained in this catalogue.

BUCHER hydraulics

ELECTRO–HYDRAULIC, PROPORTIONAL, PRIORITY, PRESSURE COMP, FLOW CONTROL VALVE.

WWW.SUMY.IR

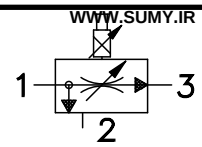

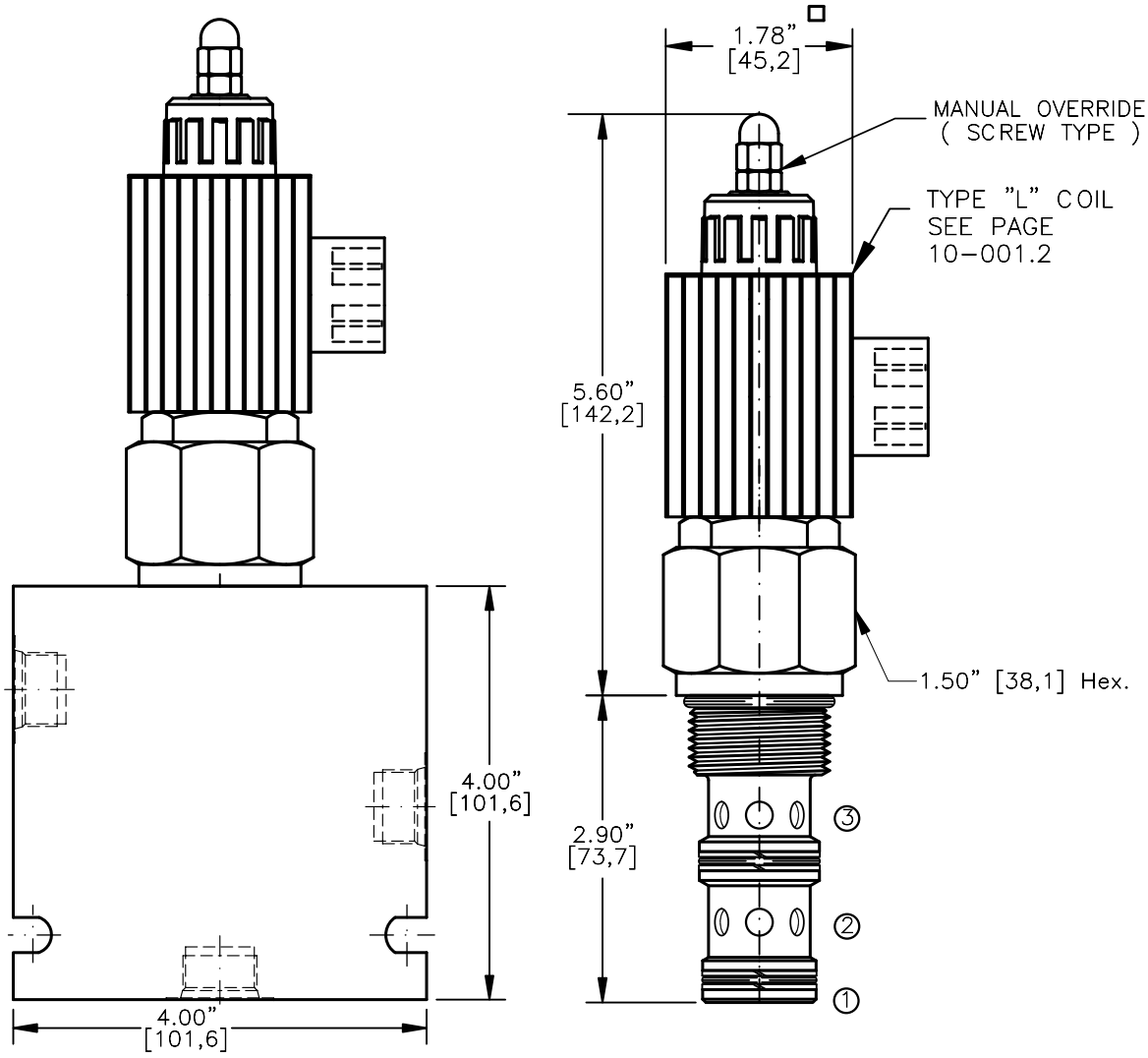

TORQUE:

Steel = 95/100 Ft–Lb. [129/136 Nm]

Aluminum = 70/75 Ft–Lb. [95/102 Nm]

EPFD–16–X–XX–X–X–XXX X

BASIC

SIZE
16 = 1.312"–12UNF

SEALS
N = BUNA "N"
V = VITON

REGULATED FLOW
05 = 0 TO 5.0 GPM
10 = 0 TO 10.0 GPM
15 = 0 TO 15.0 GPM
20 = 0 TO 20.0 GPM

PORTS = CARTRIDGE ONLY
0 = G 3/4" BSPP
06BX = G 1" BSPP
08BX = SAE – #12
12TX = SAE – #16
16TX "A" = ALUM. HOUSING
"S" = STEEL HOUSING

ADJUSTMENT OPTIONS
M = MANUAL OVERRIDE

VOLTAGE AMPS
12D = 12 VDC 3.00
24D = 24 VDC 1.50

TERMINALS
L =18GA. 24" LEADS
T =SPADE TERM.
B =BOLT TERM.
G =DIN43650
W =WEATHER–PACK
D =DEUTSCH–DT04–2P
M =METRI–PACK CONN.

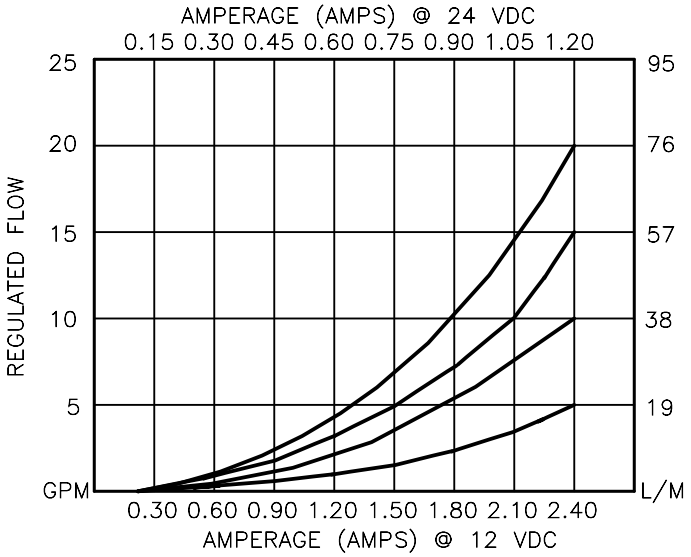

BUCHER hydraulics

WWW.SUMY.IR

PROPORTIONAL, PRIORITY TYPE, PRESSURE COMP, FLOW CONTROL VALVE.

DESCRIPTION

This valve is a cartridge style, electro–hydraulic, proportional, priority (BY–PASS) type, pressure compensated, hydraulic flow control. Regulated flow 20.0 GPM [76,0 L/M] max. is proportional to the current input regardless of load or system pressure. After the priority flow is satisfied the excess flow is diverted to a secondary circuit or to tank. Maximum inlet flow is 35.0 GPM [130,0 L/M].

OPERATIONS

This unit is a direct acting (NO PILOT FLOW), electro hydraulic, proportional, pressure compensated, flow control valve. When the coil is energized the armature moves the metering orifice open against a precision bias spring varying the flow. A pressure compensator spool (HYDROSTAT) modulates the flow at 100 PSI/6,9 Bar delta "P" providing the valve with a constant regulated flow regardless of load or system pressure. When current is increased to the coil the flow will increase, as the current is decreased the flow will decrease proportionally.
IN THE EVENT OF POWER FAILURE THE VALVE WILL CLOSE.

FEATURES AND BENEFITS

Continuous–duty, very low heat rise & waterproof solenoid coil.
Interchangeable solenoid coils & terminations options available.
Hardened precision fitted spool & sleeve provides reliable, long life.
Very efficient wet – armature solenoid core tube construction.
All external carbon steel parts are plated for longer life against the elements.
All cartridge valves are 100% functionally tested.

BUCHER hydraulics

WWW.SUMY.IR

PROPORTIONAL, PRIORITY TYPE, PRESSURE COMP, FLOW CONTROL VALVE.

SPECIFICATIONS

OPERATING PRESSURE: 5,000 PSI [350 Bar]
PROOF PRESSURE: 10,000 PSI [700 Bar]
REGULATED FLOW: 20.0 GPM [76,0 l/m] Max. See performance chart.
INTERNAL LEAKAGE: 20 cu.in/min [330 cc/m] @ 5,000 PSI [350 Bar]
VALVE HOUSINGS: 2500 PSI [175 Bar] = Aluminum – Anodized.
5000 PSI [350 Bar] = Steel – Unplated.
OPERATING TEMPERATURE: –40° to +250° F. [–40° to +120° C.]
OPERATING MEDIA: All general purpose hydraulic fluids such as MIL–H–5606, SAE–#10, SAE–#20, etc.
RESPONSE: The most efficient method to control this valve is with current control and a 50 Hz dither.
POWER REQUIREMENTS: 12 VDC, Operating current 0.2 to 2.2 AMPS.
24 VDC, Operating current 0.1 to 1.1 AMPS.
SEAL KIT: SKN–1632 Buna "N"
SKV–1632 Viton
INSTALLATION: No restrictions.
WEIGHT: 2.66 lb [1,20 kg] cartridge with coil only.
VALVE CAVITY: #C1630, See Page 0–034.0.

info.el@bucherhydraulics.com www.bucherhydraulics.com/commoncavity

© 2015 by Bucher Hydraulics, Inc., 2545 Northwest Parkway, Elgin, Illinois 60124, USA
All rights reserved.
The technical information in this catalog, may contain calculated figures (for reference only) and not actual performance data for this product. Data is provided for the purpose of product description only, and must not be construed as warranted characteristics in the legal sense. The information does not relieve users from the duty of conducting their own evaluations and tests. Because the products are subject to continual improvement, we reserve the right to amend the product specifications contained in this catalogue.

BUCHER hydraulics

FLOW DIVIDER/COMBINER VALVE, SPOOL TYPE

WWW.SUMY.IR

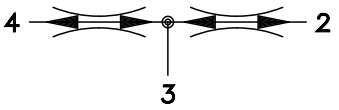

TORQUE:
Steel = 35/40 Ft–Lb. [47/54 Nm]
Aluminum = 25/30 Ft–Lb. [34/41 Nm]

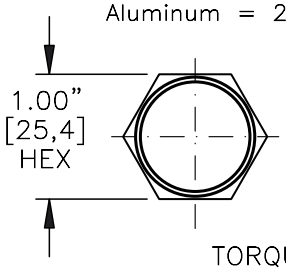

TORQUE to 35/40 Ft–Lb. [47/54 N–m].

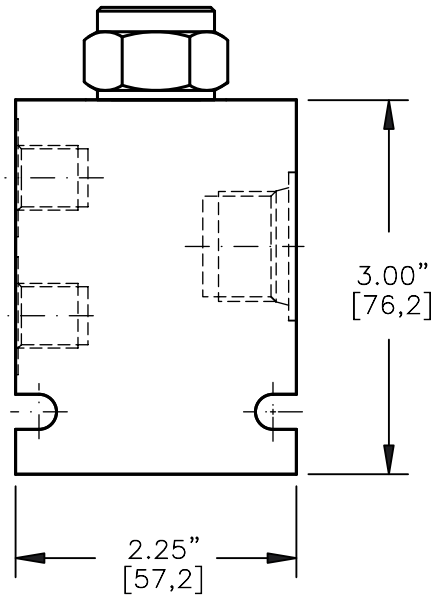

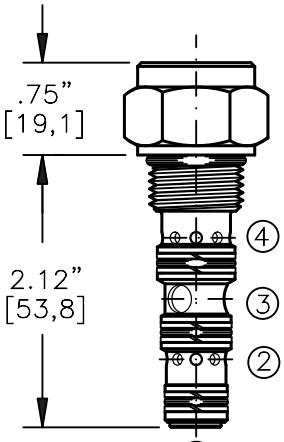

1 NOT USED

PORT #3 (INLET) IS ONE SIZE LARGER THAN PORTS #2 & #4 (OUTLET).
FOR ALUMINUM OR STEEL VALVE HOUSING CONFIGURATIONS SEE PAGE 0–041.2

FDCV–08–X–X–XX

BASIC

SIZE
08 = 3/4"–16 UNF

SEALS
N = BUNA "N"
V = VITON

PORT#3
0 = CARTRIDGE ONLY
03BX = G 3/8" BSPP
08TX = SAE – #8
"A" – ALUM. HOUSING
"S" – STEEL HOUSING

FLOW DIVISION

CODE	PORT#2	PORT#4	MAX FLOW
11	50%	50%	1.0 GPM
22	50%	50%	2.0 GPM
33	50%	50%	3.0 GPM
44	50%	50%	4.0 GPM
66	50%	50%	6.0 GPM
88	50%	50%	8.0 GPM
12	33.3%	66.6%	1.5 GPM
13	25%	75%	2.0 GPM
24	33.3%	66.6%	3.0 GPM
26	25%	75%	4.0 GPM
36	33.3%	66.6%	4.5 GPM
48	33.3%	66.6%	6.0 GPM
21	66.6%	33.3%	1.5 GPM
31	75%	25%	2.0 GPM
42	66.6%	33.3%	3.0 GPM
62	75%	25%	4.0 GPM
63	66.6%	33.3%	4.5 GPM
84	66.6%	33.3%	6.0 GPM

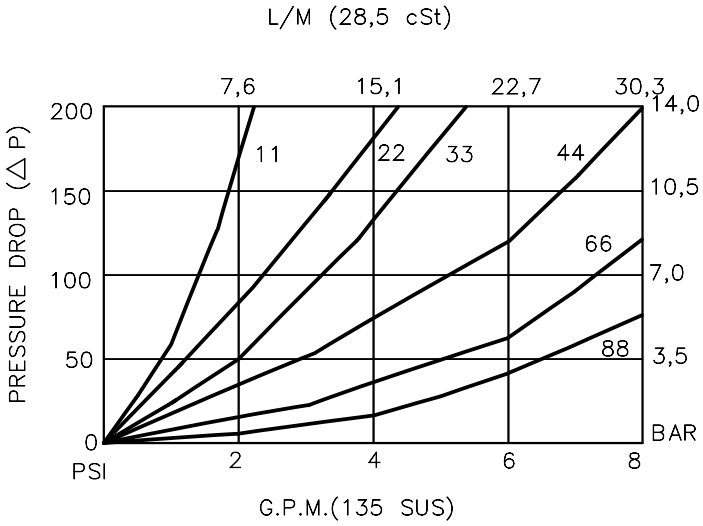

BUCHER hydraulics

WWW.SUMY.IR

FLOW DIVIDER/COMBINER VALVE, SPOOL TYPE

DESCRIPTION

This unit is a spool type, screw in cartridge style, flow divider/combiner valve.

OPERATIONS

This valve divides flow from port 3 to ports 2 and 4 and combines flow from ports 2 and 4 to port 3 at the specified flow division regardless of load or system pressure.
Should the circuit operation result in blockage of either port 2 or 4, the opposite port will continue to flow but at a reduced flow rate to synchronize a cylinder.

FEATURES AND BENEFITS

Flow accuracy dividing or combining:
+/−5.0% of flows under 40% of the rated flow.
+/−2.5% of flows over 40% of the rated flow.
Quiet and stable operation over wide varying flow, pressure and temperature range.
All external carbon steel parts are plated for longer life against the elements.
All cartridge valves are 100% functionally tested.
Industry common cavity.

SPECIFICATIONS

OPERATING PRESSURE: 5,000 PSI [350 Bar]
PROOF PRESSURE: 10,000 PSI [700 Bar]
FLOW:8.0 GPM [30 l/m] nominal. See performance chart.
VALVE HOUSINGS: 2500 PSI [175 Bar] = Aluminum − Anodized.
5000 PSI [350 Bar] = Steel − Unplated.
OPERATING TEMPERATURE: −40° to +250° F. [−40° to +120° C.]
OPERATING MEDIA: All general purpose hydraulic fluids such as MIL−H−5606, SAE−#10, SAE−#20, etc.
INSTALLATION: No restrictions.
SEAL KIT: SKN−0842 Buna "N".
SKV−0842 Viton.
WEIGHT: .24 lb [.11 kg] cartridge only.
VALVE CAVITY: #C0840, See Page 0−041.0.

info.el@bucherhydraulics.com www.bucherhydraulics.com/commoncavity

© 2015 by Bucher Hydraulics, Inc., 2545 Northwest Parkway, Elgin, Illinois 60124, USA
All rights reserved.
Data is provided for the purpose of product description only, and must not be construed as warranted characteristics in the legal sense. The information does not relieve users from the duty of conducting their own evaluations and tests. Because the products are subject to continual improvement, we reserve the right to amend the product specifications contained in this catalogue.

BUCHER hydraulics

FLOW DIVIDER/COMBINER VALVE SPOOL TYPE.

WWW.SUMY.IR

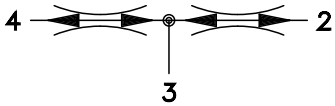

TORQUE:
Steel = 55/60 Ft–Lb. [74/81 Nm]
Aluminum = 35/40 Ft–Lb. [47/54 Nm]

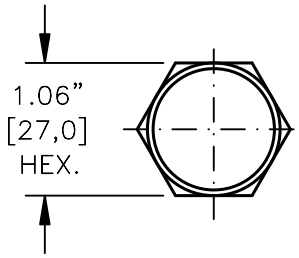

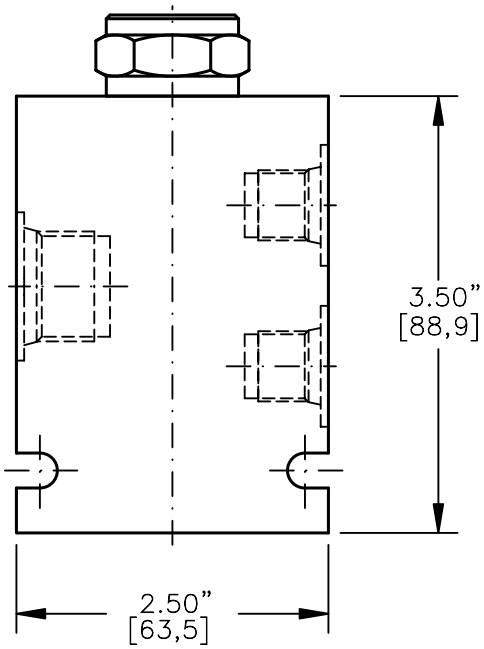

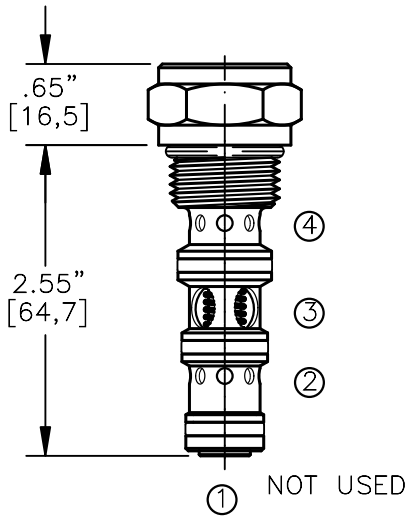

PORT #3 (INLET) IS ONE SIZE LARGER THAN PORTS #2 & #4 (OUTLET).
FOR ALUMINUM OR STEEL VALVE HOUSING CONFIGURATIONS SEE PAGE 0–042.2

FDCV–10–X–X–XX

BASIC

SIZE
10 = 7/8"–14 UNF

SEALS
N = BUNA "N"
V = VITON

PORT#3
0 = CARTRIDGE ONLY
03BX = G 3/8" BSPP
04BX = G 1/2" BSPP
08TX = SAE – #8
10TX = SAE – #10
"A" – ALUM. HOUSING
"S" – STEEL HOUSING

FLOW DIVISION

CODE	PORT#2	PORT#4	MAX FLOW
11	50%	50%	2.0 GPM
22	50%	50%	4.0 GPM
33	50%	50%	6.0 GPM
44	50%	50%	8.0 GPM
66	50%	50%	12.0 GPM
88	50%	50%	16.0 GPM
12	33.3%	66.6%	3.0 GPM
13	25%	75%	4.0 GPM
24	33.3%	66.6%	6.0 GPM
26	25%	75%	8.0 GPM
36	33.3%	66.6%	9.0 GPM
48	33.3%	66.6%	12.0 GPM
21	66.6%	33.3%	3.0 GPM
31	75%	25%	4.0 GPM
42	66.6%	33.3%	6.0 GPM
62	75%	25%	8.0 GPM
63	66.6%	33.3%	9.0 GPM
84	66.6%	33.3%	12.0 GPM

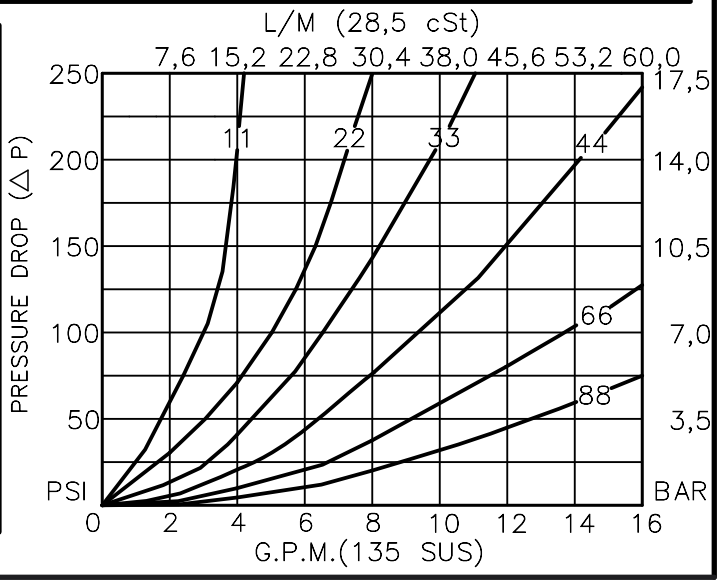

BUCHER hydraulics

WWW.SUMY.IR

FLOW DIVIDER/COMBINER VALVE SPOOL TYPE.

DESCRIPTION

This unit is a spool type, screw in cartridge style, flow divider/combiner valve.

OPERATIONS

This valve divides flow from port 3 to ports 2 and 4 and combines flow from ports 2 and 4 to port 3 at the specified flow division regardless of load or system pressure.
Should the circuit operation result in blockage of either port 2 or 4, the opposite port will continue to flow but at a reduced flow rate to synchronize a cylinder.

FEATURES AND BENEFITS

Flow accuracy dividing or combining:
+/−5.0% of flows under 40% of the rated flow.
+/−2.5% of flows over 40% of the rated flow.
Quiet and stable operation over wide varying flow, pressure and temperature range.
All external carbon steel parts are plated for longer life against the elements.
All cartridge valves are 100% functionally tested.
Industry common cavity.

SPECIFICATIONS

OPERATING PRESSURE: 5,000 PSI [350 Bar]
PROOF PRESSURE: 10,000 PSI [700 Bar]
FLOW:16.0 GPM [60 l/m] nominal. See performance chart.
VALVE HOUSINGS: 2500 PSI [175 Bar] = Aluminum − Anodized.
5000 PSI [350 Bar] = Steel − Unplated.
OPERATING TEMPERATURE: −40° to +250° F. [−40° to +120° C.]
OPERATING MEDIA: All general purpose hydraulic fluids such as MIL−H−5606, SAE−#10, SAE−#20, etc.
INSTALLATION: No restrictions.
SEAL KIT: SKN−1040 Buna "N".
SKV−1040 Viton.
WEIGHT: .31 lb [.14 kg] cartridge only.
VALVE CAVITY: #C1040, See Page 0−042.0.

info.el@bucherhydraulics.com

www.bucherhydraulics.com/commoncavity

© 2015 by Bucher Hydraulics, Inc., 2545 Northwest Parkway, Elgin, Illinois 60124, USA
All rights reserved.
Data is provided for the purpose of product description only, and must not be construed as warranted characteristics in the legal sense. The information does not relieve users from the duty of conducting their own evaluations and tests. Because the products are subject to continual improvement, we reserve the right to amend the product specifications contained in this catalogue.

BUCHER hydraulics

FLOW DIVIDER/COMBINER VALVE
SPOOL TYPE

WWW.SUMY.IR

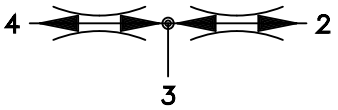

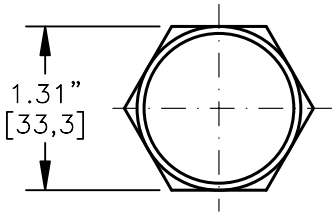

TORQUE to 80/90 Ft–Lb.
[108/122 N–m]

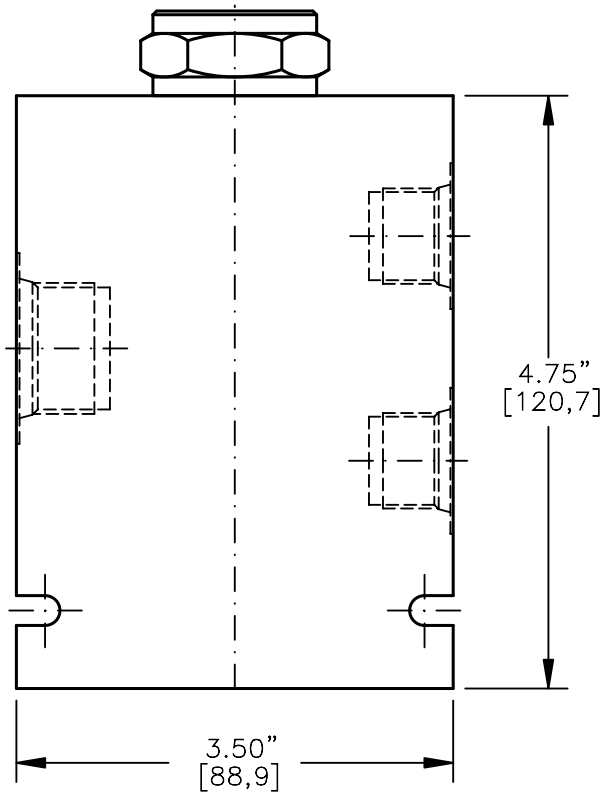

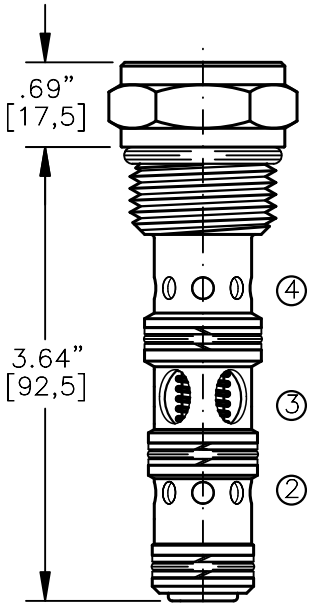

① NOT USED

PORT #3 (INLET) IS ONE SIZE LARGER THAN PORTS #2 & #4 (OUTLETS).
FOR ALUMINUM OR STEEL VALVE HOUSING CONFIGURATIONS SEE PAGE 0–043.2

FDCV–12–X–X–XX

BASIC

SIZE
12 = 1.062–12 UNF

SEALS
N = BUNA "N"
V = VITON

PORT#3
0 = CARTRIDGE ONLY
06BX = G 3/4" BSPP
12TX = SAE – #12
"A" – ALUM. HOUSING
"S" – STEEL HOUSING

FLOW DIVISION

CODE	PORT#2	PORT#4	MAX FLOW
11	50%	50%	4.0 GPM
22	50%	50%	8.0 GPM
33	50%	50%	12.0 GPM
44	50%	50%	16.0 GPM
66	50%	50%	24.0 GPM
88	50%	50%	32.0 GPM
12	33.3%	66.6%	6.0 GPM
13	25%	75%	8.0 GPM
24	33.3%	66.6%	12.0 GPM
26	25%	75%	16.0 GPM
36	33.3%	66.6%	18.0 GPM
48	33.3%	66.6%	24.0 GPM
21	66.6%	33.3%	6.0 GPM
31	75%	25%	8.0 GPM
42	66.6%	33.3%	12.0 GPM
62	75%	25%	16.0 GPM
63	66.6%	33.3%	18.0 GPM
84	66.6%	33.3%	24.0 GPM

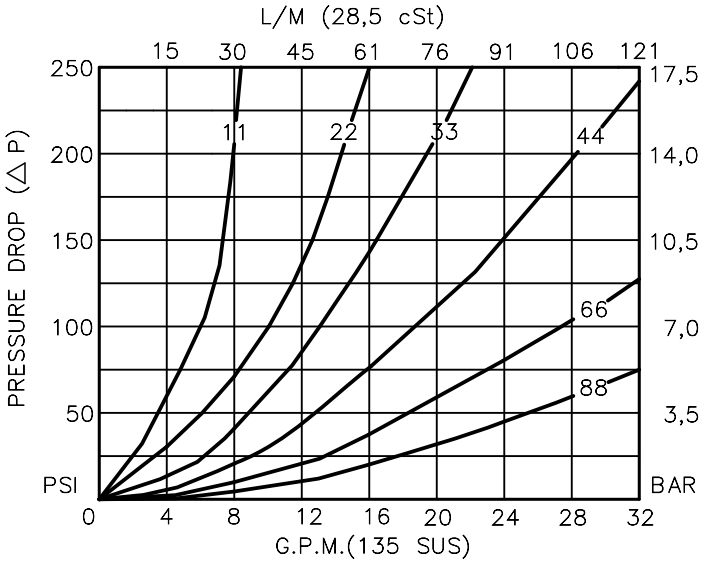

BUCHER hydraulics

WWW.SUMY.IR

FLOW DIVIDER/COMBINER VALVE
SPOOL TYPE

DESCRIPTION

This unit is a spool type, screw in cartridge style, flow divider/combiner valve.

OPERATIONS

This valve divides flow from port 3 to ports 2 and 4 and combines flow from ports 2 and 4 to port 3 at the specified flow division regardless of load or system pressure.
Should the circuit operation result in blockage of either port 2 or 4, the opposite port will continue to flow but at a reduced flow rate to synchronize a cylinder.

FEATURES AND BENEFITS

Flow accuracy dividing or combining:
+/−5.0% of flows under 40% of the rated flow.
+/−2.5% of flows over 40% of the rated flow.
Quiet and stable operation over wide varying flow, pressure and temperature range.
All external carbon steel parts are plated for longer life against the elements.
All cartridge valves are 100% functionally tested.
Ports 2 & 4 (outlets) are stepped down one size from port #3 (inlet).

SPECIFICATIONS

OPERATING PRESSURE: 5,000 PSI [350 Bar]
PROOF PRESSURE: 10,000 PSI [700 Bar]
FLOW: 32.0 GPM [121 l/m] nominal. See performance chart.
VALVE HOUSINGS: 2500 PSI [175 Bar] = Aluminum − Anodized.
5000 PSI [350 Bar] = Steel − Unplated.
OPERATING TEMPERATURE: −40° to +250° F. [−40° to +120° C.]
OPERATING MEDIA: All general purpose hydraulic fluids such as MIL−H−5606, SAE−#10, SAE−#20, etc.
INSTALLATION: No restrictions.
SEAL KIT: SKN−1242 Buna "N".
SKV−1242 Viton.
WEIGHT: .62 lb [.28 kg] cartridge only.
VALVE CAVITY: #C1240, See Page 0−043.0.

info.el@bucherhydraulics.com

www.bucherhydraulics.com/commoncavity

© 2015 by Bucher Hydraulics, Inc., 2545 Northwest Parkway, Elgin, Illinois 60124, USA
All rights reserved.
Data is provided for the purpose of product description only, and must not be construed as warranted characteristics in the legal sense. The information does not relieve users from the duty of conducting their own evaluations and tests. Because the products are subject to continual improvement, we reserve the right to amend the product specifications contained in this catalogue.

BUCHER hydraulics

WWW.SUMY.IR

FLOW DIVIDER/COMBINER TRACTION VALVE

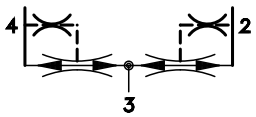

TORQUE:
Steel = 35/40 Ft–Lb. [47/54 Nm]
Aluminum = 25/30 Ft–Lb. [34/41 Nm]

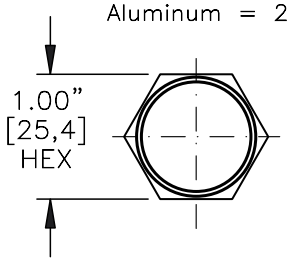

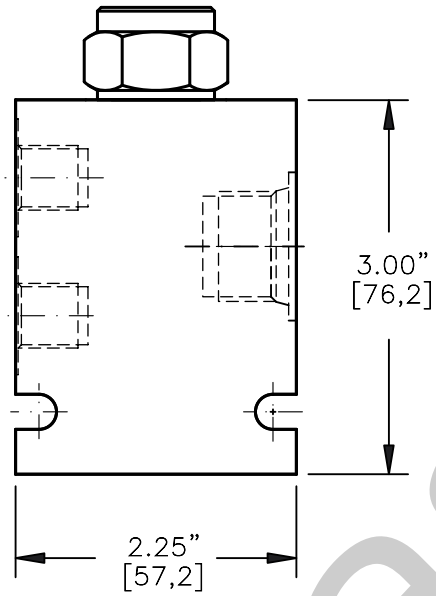

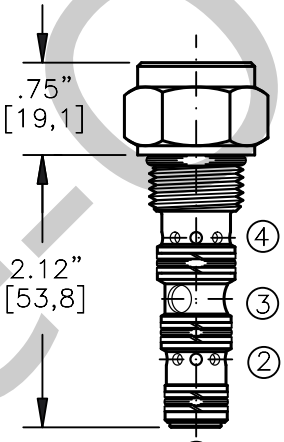

1 NOT USED

PORT #3 (INLET) IS ONE SIZE LARGER THAN PORTS #2 & #4 (OUTLET).
FOR ALUMINUM OR STEEL VALVE HOUSING CONFIGURATIONS SEE PAGE 0–041.2

FDCT–08–X–X–XX

BASIC

SIZE
08 = 3/4"–16 UNF

SEALS
N = BUNA "N"
V = VITON

PORT#3
0 = CARTRIDGE ONLY
03BX = G 3/8" BSPP
08TX = SAE – #8
"A" – ALUM. HOUSING
"S" – STEEL HOUSING

INLET FLOW

CODE	FLOW
11	1.0 GPM
22	2.0 GPM
33	3.0 GPM
44	4.0 GPM
66	6.0 GPM
88	8.0 GPM

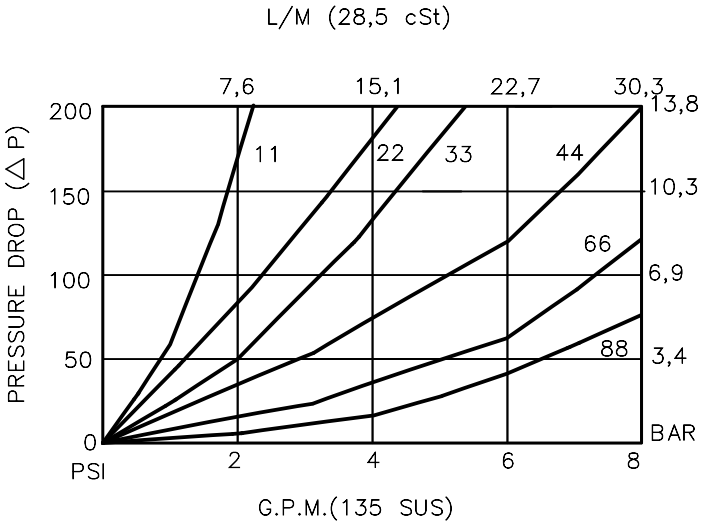

Phase-Out

BUCHER hydraulics

WWW.SUMY.IR

FLOW DIVIDER/COMBINER TRACTION VALVE

DESCRIPTION

This unit is a spool type, screw in cartridge style, flow divider/combiner traction valve. This valve is used when hydraulic motors are used as drive motors on each side of a machine.

OPERATIONS

This valve divides flow from port 3 to ports 2 and 4 and combines flow from ports 2 and 4 to port 3 at the specified flow division regardless of load or system pressure. When the machine turns a corner the valve shifts part of the flow from the inside motor to the outside motor. This allows the wheels to adjust their speed relative to the turn radius to prevent the wheels from skidding.

FEATURES AND BENEFITS

Equal flow sent to each motor when the machine is driving in a straight line. During a turn, the flow is adjusted between the motors to keep both wheels driving, while adjusting the speed to match the turn.
Quiet and stable operation over wide varying flow, pressure and temperature range.
All external carbon steel parts are plated for longer life against the elements.
All cartridge valves are 100% functionally tested.
Industry common cavity.

SPECIFICATIONS

OPERATING PRESSURE: 5,000 PSI [350 Bar]
PROOF PRESSURE: 10,000 PSI [700 Bar]
FLOW: 8.0 GPM [30 l/m] nominal. See performance chart.
VALVE HOUSINGS: 2500 PSI [175 Bar] = Aluminum – Anodized.
5000 PSI [350 Bar] = Steel – Unplated.
OPERATING TEMPERATURE: –40° to +250° F. [–40° to +120° C.]
OPERATING MEDIA: All general purpose hydraulic fluids such as MIL–H–5606, SAE–#10, SAE–#20, etc.
INSTALLATION: No restrictions.
SEAL KIT: SKN–0842 Buna "N".
SKV–0842 Viton.
WEIGHT: .24 lb [.11 kg] cartridge only.
VALVE CAVITY: #C0840, See Page 0–041.2.

info.el@bucherhydraulics.com www.bucherhydraulics.com/commoncavity

© 2015 by Bucher Hydraulics, Inc., 2545 Northwest Parkway, Elgin, Illinois 60124, USA
All rights reserved.
Data is provided for the purpose of product description only, and must not be construed as warranted characteristics in the legal sense. The information does not relieve users from the duty of conducting their own evaluations and tests. Because the products are subject to continual improvement, we reserve the right to amend the product specifications contained in this catalogue.

Phase-Out

BUCHER hydraulics

PRIORITY ON DEMAND SPOOL ELEMENT SPOOL TYPE, FOR LOAD SENSE STEERING.

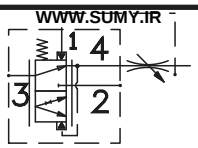

TORQUE:
Steel = 35/40 Ft–Lb. [47/54 Nm]
Aluminum = 25/30 Ft–Lb. [34/41 Nm]

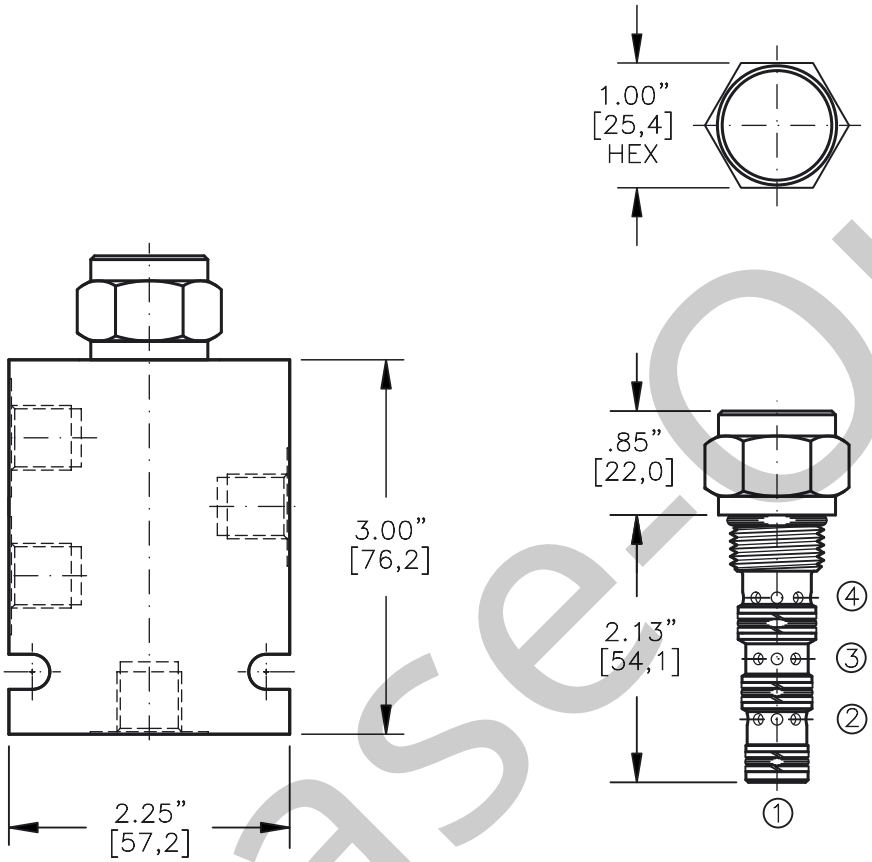

FOR ALUMINUM OR STEEL VALVE HOUSING CONFIGURATIONS SEE PAGE 0–041.1

PODS–08–X–F–X–XXX

BASIC

SIZE
08 = 3/4"–16 UNF

SEALS
N = BUNA "N"
V = VITON

ADJUSTMENT
"F" = FIXED ONLY

PRESSURE BIAS SPRING
050 = 50 PSI (FIXED)
100 = 100 PSI (FIXED)
150 = 150 PSI (FIXED)

PORTS
0 = CARTRIDGE ONLY
02BX = G 1/4" BSPP
06TX = SAE – #6

"A" – ALUM. HOUSING
"S" – STEEL HOUSING

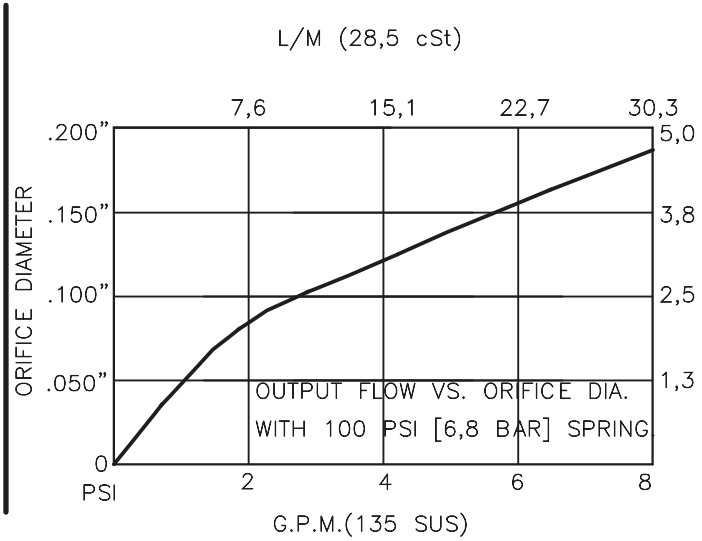

Phase-Out

BUCHER hydraulics

WWW.SUMY.IR

PRIORITY ON DEMAND SPOOL ELEMENT. SPOOL TYPE, FOR LOAD SENSE STEERING.

DESCRIPTION

This unit is a DIRECT ACTING, SCREW IN CARTRIDGE STYLE, SPOOL TYPE, PRIORITY ON DEMAND PRESSURE COMPENSATED FLOW CONTROL ELEMENT. This unit is used to provide a load sense steering first with the priority flow when the steering demands the flow and the amount it requires before any other function in the system. When the steering or any other priority functions are satisfied, only then the excess flow is diverted to the auxilliary port for other functions.

OPERATIONS

When the steering wheel is turned, the flow from port 3 is distributed to the priority port 4 when the system calls for it. The remaining flow is available to the rest of the working hydraulic system thru the excess port 2.
The distribution is controlled by the load sense signal to port 1 from the steering unit, so the flow to the steering unit is always determined by the actual steering rate.

FEATURES AND BENEFITS

Hardened precision fitted spool & cage provides reliable, long life.
A unibody cage construction provides a very low hysteresis and very reliable operation.
All external carbon steel parts are plated for longer life against the elements.
All cartridge valves are 100% functionally tested.
Industry common cavity.

Phase-Out

BUCHER hydraulics

WWW.SUMY.IR

PRIORITY ON DEMAND SPOOL ELEMENT. SPOOL TYPE, FOR LOAD SENSE STEERING.

SPECIFICATIONS

OPERATING PRESSURE: 5,000 PSI [350 Bar]
PROOF PRESSURE: 10,000 PSI [700 Bar]
INLET FLOW: 8.0 GPM [30 L/M].Regulated see performance chart.
INTERNAL LEAKAGE: 5 cu.in./min. [85 cc/m].
DEFINITION OF CRACK: evident at 0.06 GPM [0.25 L/M]
VALVE HOUSINGS: 2500 PSI [175 Bar] = Aluminum – Anodized.
5000 PSI [350 Bar] = Steel – Unplated.
OPERATING TEMPERATURE: –40° to +250° F. [–40° to +120° C.]
OPERATING MEDIA: All general purpose hydraulic fluids such as MIL–H–5606, SAE–#10, SAE–#20, etc.
INSTALLATION: No restriction.
FILTRATION: 25 microns or better.
SEAL KIT NUMBER: SKN–0842 for buna "N".
SKV–0842 for viton.
WEIGHT: 0.26 lb [.12 kg] cartridge only.
VALVE CAVITY: #C0840, See Page 0–041.0.

Phase-Out

info.el@bucherhydraulics.com www.bucherhydraulics.com/commoncavity

© 2015 by Bucher Hydraulics, Inc., 2545 Northwest Parkway, Elgin, Illinois 60124, USA
All rights reserved.
Data is provided for the purpose of product description only, and must not be construed as warranted characteristics in the legal sense. The information does not relieve users from the duty of conducting their own evaluations and tests. Because the products are subject to continual improvement, we reserve the right to amend the product specifications contained in this catalogue.

BUCHER hydraulics

PRIORITY ON DEMAND SPOOL ELEMENT SPOOL TYPE, FOR LOAD SENSE STEERING.

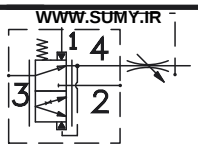

TORQUE:
Steel = 55/60 Ft–Lb. [74/81 Nm]
Aluminum = 35/40 Ft–Lb. [47/54 Nm]

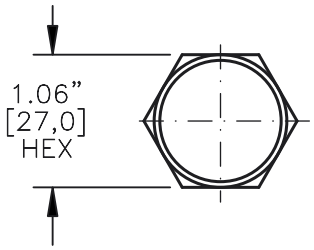

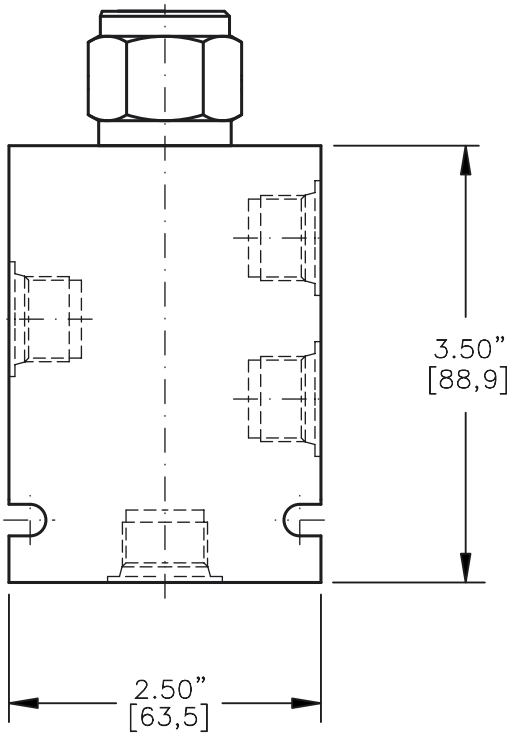

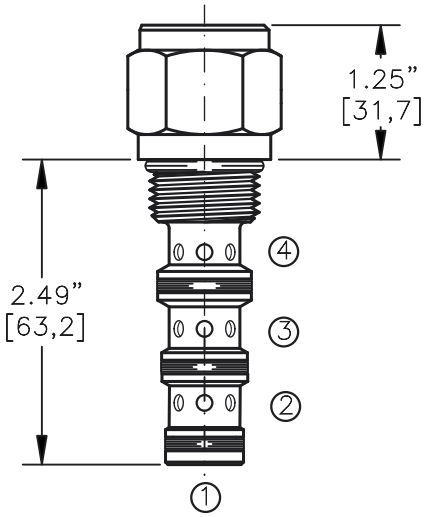

FOR ALUMINUM OR STEEL VALVE HOUSING CONFIGURATIONS SEE PAGE 0–042.1

PODS–10–X–X–X–XXX

BASIC

SIZE
10 = 7/8"–14 UNF

SEALS
N = BUNA "N"
V = VITON

ADJUSTMENT
"F" = FIXED ONLY

PRESSURE BIAS SPRING
050 = 50 PSI (FIXED)
100 = 100 PSI (FIXED)
150 = 150 PSI (FIXED)

PORTS
0 = CARTRIDGE ONLY
02BX = G 1/4" BSPP
03BX = G 3/8" BSPP
06TX = SAE – #6
08TX = SAE – #8

"A" – ALUM. HOUSING
"S" – STEEL HOUSING

FOR ADJUSTMENT CONTROL OPTIONS SEE PAGE 0–050.0

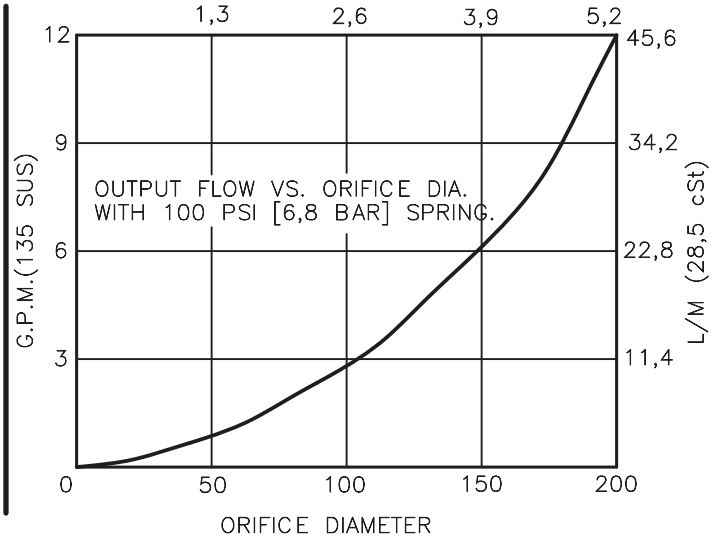

BUCHER hydraulics

WWW.SUMY.IR

PRIORITY ON DEMAND SPOOL ELEMENT. SPOOL TYPE, FOR LOAD SENSE STEERING.

DESCRIPTION

This unit is a DIRECT ACTING, SCREW IN CARTRIDGE STYLE, SPOOL TYPE, PRIORITY ON DEMAND PRESSURE COMPENSATED FLOW CONTROL ELEMENT. This unit is used to provide a load sense steering first with the priority flow when the steering demands the flow and the amount it requires before any other function in the system. When the steering or any other priority functions are satisfied, only then the excess flow is diverted to the auxilliary port for other functions.

OPERATIONS

When the steering wheel is turned, the flow from port 3 is distributed to the priority port 4 when the system calls for it. The remaining flow is available to the rest of the working hydraulic system thru the excess port 2.
The distribution is controlled by the load sense signal to port 1 from the steering unit, so the flow to the steering unit is always determined by the actual steering rate.

FEATURES AND BENEFITS

Hardened precision fitted spool & cage provides reliable, long life.
A unibody cage construction provides a very low hysteresis and very reliable operation.
All external carbon steel parts are plated for longer life against the elements.
All cartridge valves are 100% functionally tested.
Industry common cavity.

SPECIFICATIONS

OPERATING PRESSURE: 5,000 PSI [350 Bar]
PROOF PRESSURE: 10,000 PSI [700 Bar]
INLET FLOW: 16.0 GPM [60 L/M].Regulated see performance chart.
INTERNAL LEAKAGE: 5 cu.in./min. [85 cc/m].
DEFINITION OF CRACK: evident at 0.06 GPM [0.25 L/M]
VALVE HOUSINGS: 2500 PSI [175 Bar] = Aluminum – Anodized.
5000 PSI [350 Bar] = Steel – Unplated.
OPERATING TEMPERATURE: –40° to +250° F. [–40° to +120° C.]
OPERATING MEDIA: All general purpose hydraulic fluids such as MIL–H–5606, SAE–#10, SAE–#20, etc.
INSTALLATION: No restriction.
FILTRATION: 25 microns or better.
SEAL KIT NUMBER: SKN–1042 for buna "N".
SKV–1042 for Viton.
WEIGHT: 0.42 lb [.19 kg] cartridge only.
VALVE CAVITY: #C1040, See Page 0–042.0.

info.el@bucherhydraulics.com www.bucherhydraulics.com/commoncavity

© 2015 by Bucher Hydraulics, Inc., 2545 Northwest Parkway, Elgin, Illinois 60124, USA
All rights reserved.
Data is provided for the purpose of product description only, and must not be construed as warranted characteristics in the legal sense. The information does not relieve users from the duty of conducting their own evaluations and tests. Because the products are subject to continual improvement, we reserve the right to amend the product specifications contained in this catalogue.

BUCHER hydraulics

PRIORITY ON DEMAND SPOOL ELEMENT SPOOL TYPE, FOR LOAD SENSE STEERING.

WWW.SUMY.IR

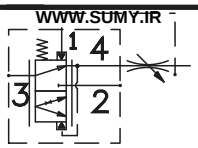

TORQUE:
Steel = 70/75 Ft–Lb. [95/102 Nm]
Aluminum = 55/60 Ft–Lb. [74/81 Nm]

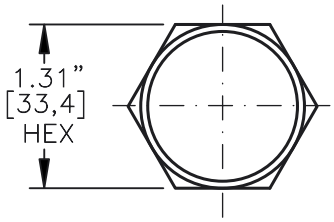

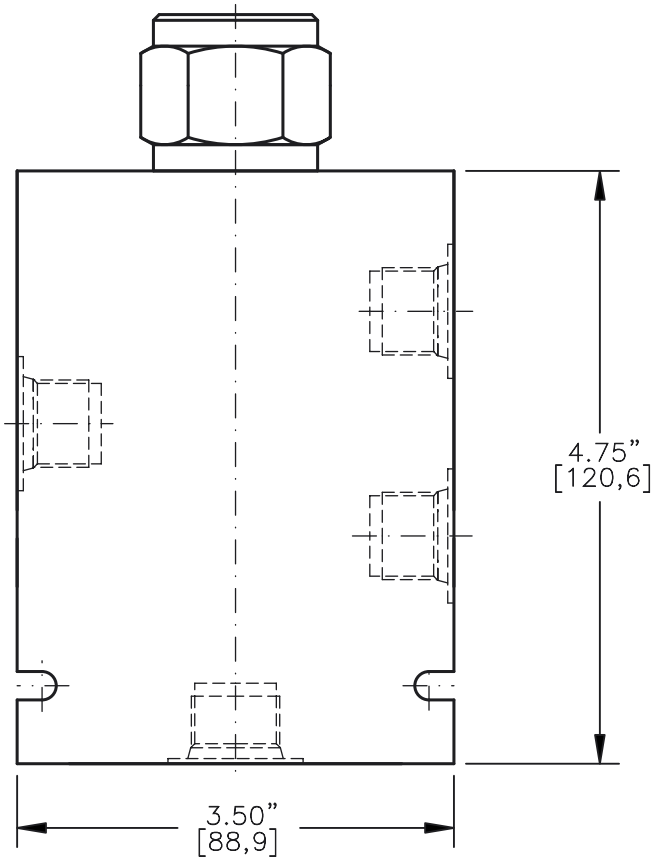

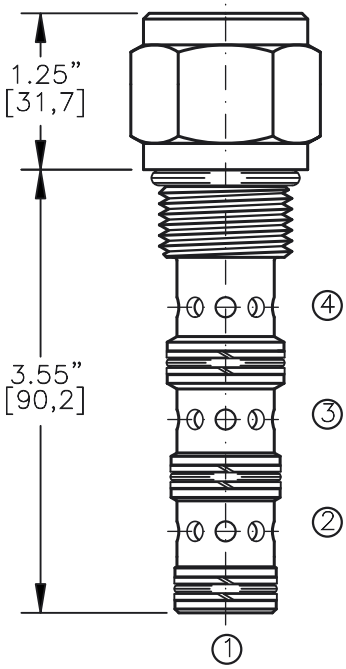

FOR ALUMINUM OR STEEL VALVE HOUSING CONFIGURATIONS SEE PAGE 0–043.1

PODS–12–X–F–X–XXX

BASIC

SIZE
12 = 1.062"–12 UNF

SEALS
N = BUNA "N"
V = VITON

ADJUSTMENT
"F" = FIXED ONLY

PORTS
0 = CARTRIDGE ONLY
04BX = G 1/2" BSPP
06BX = G 3/4" BSPP
10TX = SAE – #10
12TX = SAE – #12

"A" – ALUM. HOUSING
"S" – STEEL HOUSING

PRESSURE BIAS SPRING
050 = 50 PSI (FIXED)
100 = 100 PSI (FIXED)
150 = 150 PSI (FIXED)

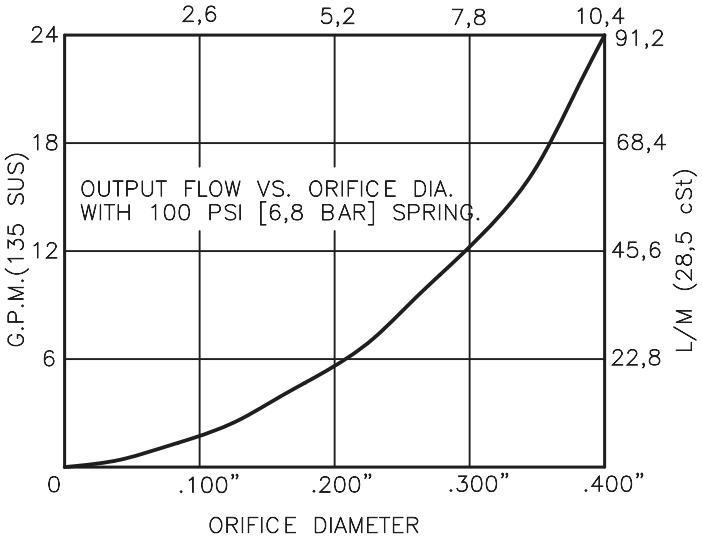

BUCHER hydraulics

WWW.SUMY.IR

PRIORITY ON DEMAND SPOOL ELEMENT. SPOOL TYPE, FOR LOAD SENSE STEERING.

DESCRIPTION

This unit is a DIRECT ACTING, SCREW IN CARTRIDGE STYLE, SPOOL TYPE, PRIORITY ON DEMAND PRESSURE COMPENSATED FLOW CONTROL ELEMENT. This unit is used to provide a load sense steering first with the priority flow when the steering demands the flow and the amount it requires before any other function in the system. When the steering or any other priority functions are satisfied, only then the excess flow is diverted to the auxilliary port for other functions.

OPERATIONS

When the steering wheel is turned, the flow from port 3 is distributed to the priority port 4 when the system calls for it. The remaining flow is available to the rest of the working hydraulic system thru the excess port 2.
The distribution is controlled by the load sense signal to port 1 from the steering unit, so the flow to the steering unit is always determined by the actual steering rate.

FEATURES AND BENEFITS

Hardened precision fitted spool & cage provides reliable, long life.
A unibody cage construction provides a very low hysteresis and very reliable operation.
All external carbon steel parts are plated for longer life against the elements.
All cartridge valves are 100% functionally tested.

SPECIFICATIONS

OPERATING PRESSURE: 5,000 PSI [350 Bar]
PROOF PRESSURE: 10,000 PSI [700 Bar]
INLET FLOW: 24.0 GPM [91 L/M]. Regulated see performance chart.
INTERNAL LEAKAGE: 5 cu.in./min. [85 cc/m].
DEFINITION OF CRACK: evident at 0.06 GPM [0.25 LPM]
VALVE HOUSINGS: 2500 PSI [175 Bar] = Aluminum – Anodized.
5000 PSI [350 Bar] = Steel – Unplated.
OPERATING TEMPERATURE: –40° to +250° F. [–40° to +120° C.]
OPERATING MEDIA: All general purpose hydraulic fluids such as MIL–H–5606, SAE–#10, SAE–#20, etc.
INSTALLATION: No restriction.
FILTRATION: 25 microns or better.
SEAL KIT NUMBER: SKN–1242 for buna "N".
SKV–1242 for viton.
WEIGHT: .90 lb [.41 kg] cartridge only.
VALVE CAVITY: #C1240, See Page 0–043.0.

info.el@bucherhydraulics.com www.bucherhydraulics.com/commoncavity

© 2015 by Bucher Hydraulics, Inc., 2545 Northwest Parkway, Elgin, Illinois 60124, USA
All rights reserved.
Data is provided for the purpose of product description only, and must not be construed as warranted characteristics in the legal sense. The information does not relieve users from the duty of conducting their own evaluations and tests. Because the products are subject to continual improvement, we reserve the right to amend the product specifications contained in this catalogue.

BUCHER hydraulics

PRIORITY ON DEMAND SPOOL ELEMENT. SPOOL TYPE, FOR LOAD SENSE STEERING.

WWW.SUMY.IR

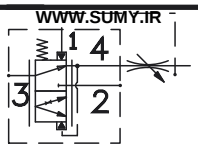

TORQUE:
Steel = 95/100 Ft–Lb. [129/136 Nm]
Aluminum = 70/75 Ft–Lb. [95/102 Nm]

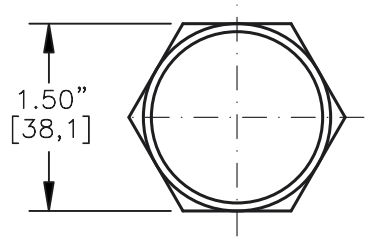

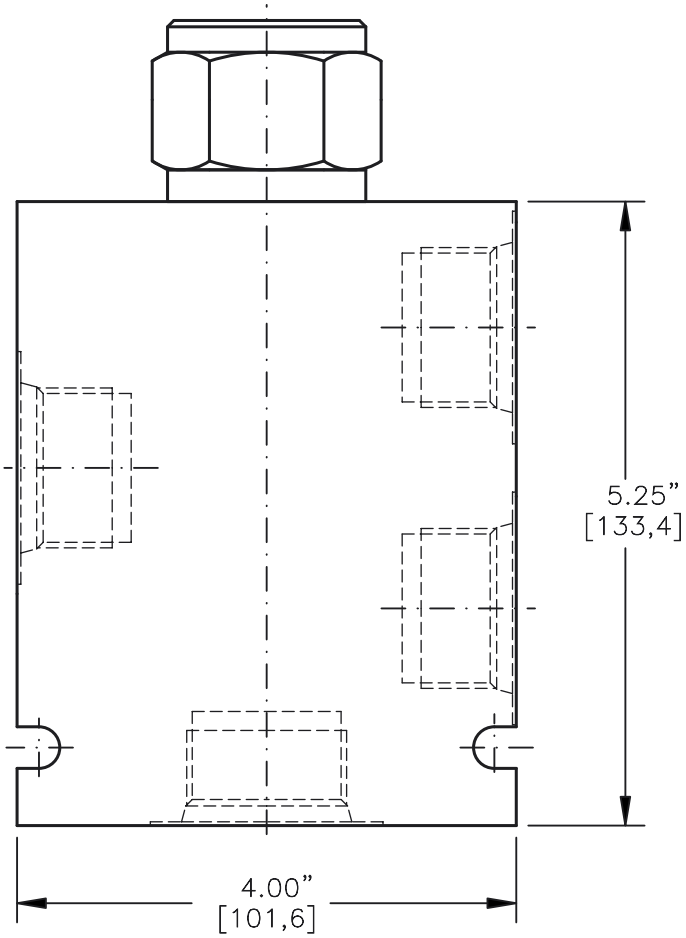

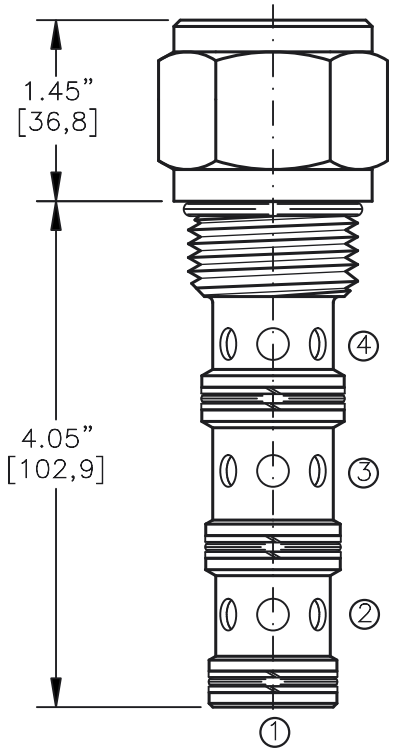

FOR ALUMINUM OR STEEL VALVE HOUSING CONFIGURATIONS SEE PAGE 0–044.1

PODS–16–X–X–X–XXX

BASIC

SIZE
16 = 1.312"–12 UNF

SEALS
N = BUNA "N"
V = VITON

ADJUSTMENT
"F" = FIXED ONLY

PORTS
0 = CARTRIDGE ONLY
06BX = G 3/4" BSPP
08BX = G 1" BSPP
12TX = SAE – #12
16TX = SAE – #16

"A" – ALUM. HOUSING
"S" – STEEL HOUSING

PRESSURE BIAS SPRING
050 = 50 PSI (FIXED)
100 = 100 PSI (FIXED)
150 = 150 PSI (FIXED)

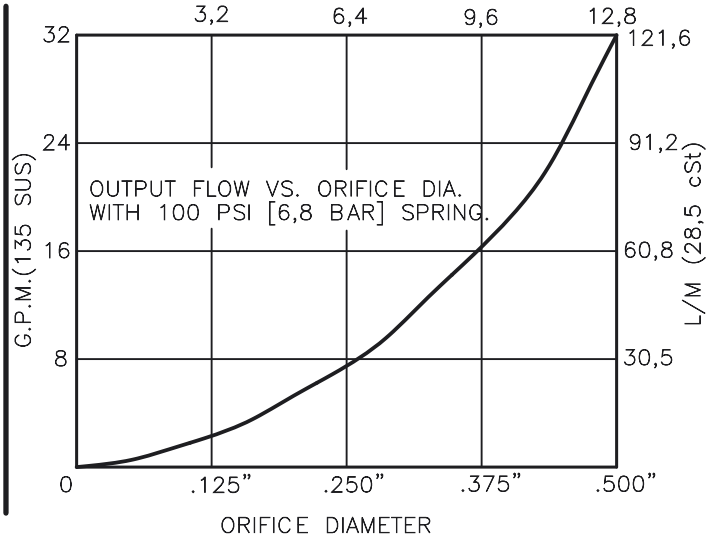

BUCHER hydraulics

WWW.SUMY.IR

PRIORITY ON DEMAND SPOOL ELEMENT. SPOOL TYPE, FOR LOAD SENSE STEERING.

DESCRIPTION

This unit is a DIRECT ACTING, SCREW IN CARTRIDGE STYLE, SPOOL TYPE, PRIORITY ON DEMAND PRESSURE COMPENSATED FLOW CONTROL ELEMENT. This unit is used to provide a load sense steering first with the priority flow when the steering demands the flow and the amount it requires before any other function in the system. When the steering or any other priority functions are satisfied, only then the excess flow is diverted to the auxilliary port for other functions.

OPERATIONS

When the steering wheel is turned, the flow from port 3 is distributed to the priority port 4 when the system calls for it. The remaining flow is available to the rest of the working hydraulic system thru the excess port 2.
The distribution is controlled by the load sense signal to port 1 from the steering unit, so the flow to the steering unit is always determined by the actual steering rate.

FEATURES AND BENEFITS

Hardened precision fitted spool & cage provides reliable, long life.
A unibody cage construction provides a very low hysteresis and very reliable operation.
All external carbon steel parts are plated for longer life against the elements.
All cartridge valves are 100% functionally tested.
Industry common cavity.

SPECIFICATIONS

OPERATING PRESSURE: 5,000 PSI [350 Bar]
PROOF PRESSURE: 10,000 PSI [700 Bar]
INLET FLOW: 36.0 GPM [140 L/M]. Regulated see performance chart.
INTERNAL LEAKAGE: 5 cu.in./min. [85 cc/m].
DEFINITION OF CRACK: evident at 0.06 GPM [0.25 LPM]
VALVE HOUSINGS: 2500 PSI [175 Bar] = Aluminum – Anodized.
5000 PSI [350 Bar] = Steel – Unplated.
OPERATING TEMPERATURE: –40° to +250° F. [–40° to +120° C.]
OPERATING MEDIA: All general purpose hydraulic fluids such as MIL–H–5606, SAE–#10, SAE–#20, etc.
INSTALLATION: No restriction.
FILTRATION: 25 microns or better.
SEAL KIT NUMBER: SKN–1642 for buna "N".
SKV–1642 for viton.
WEIGHT: 1.30 lb [.59 kg] cartridge only.
VALVE CAVITY: #C1640, See Page 0–044.0.

info.el@bucherhydraulics.com www.bucherhydraulics.com/commoncavity

© 2015 by Bucher Hydraulics, Inc., 2545 Northwest Parkway, Elgin, Illinois 60124, USA
All rights reserved.
Data is provided for the purpose of product description only, and must not be construed as warranted characteristics in the legal sense. The information does not relieve users from the duty of conducting their own evaluations and tests. Because the products are subject to continual improvement, we reserve the right to amend the product specifications contained in this catalogue.

BUCHER hydraulics
WWW.SUMY.IR

Cavity Type C2040

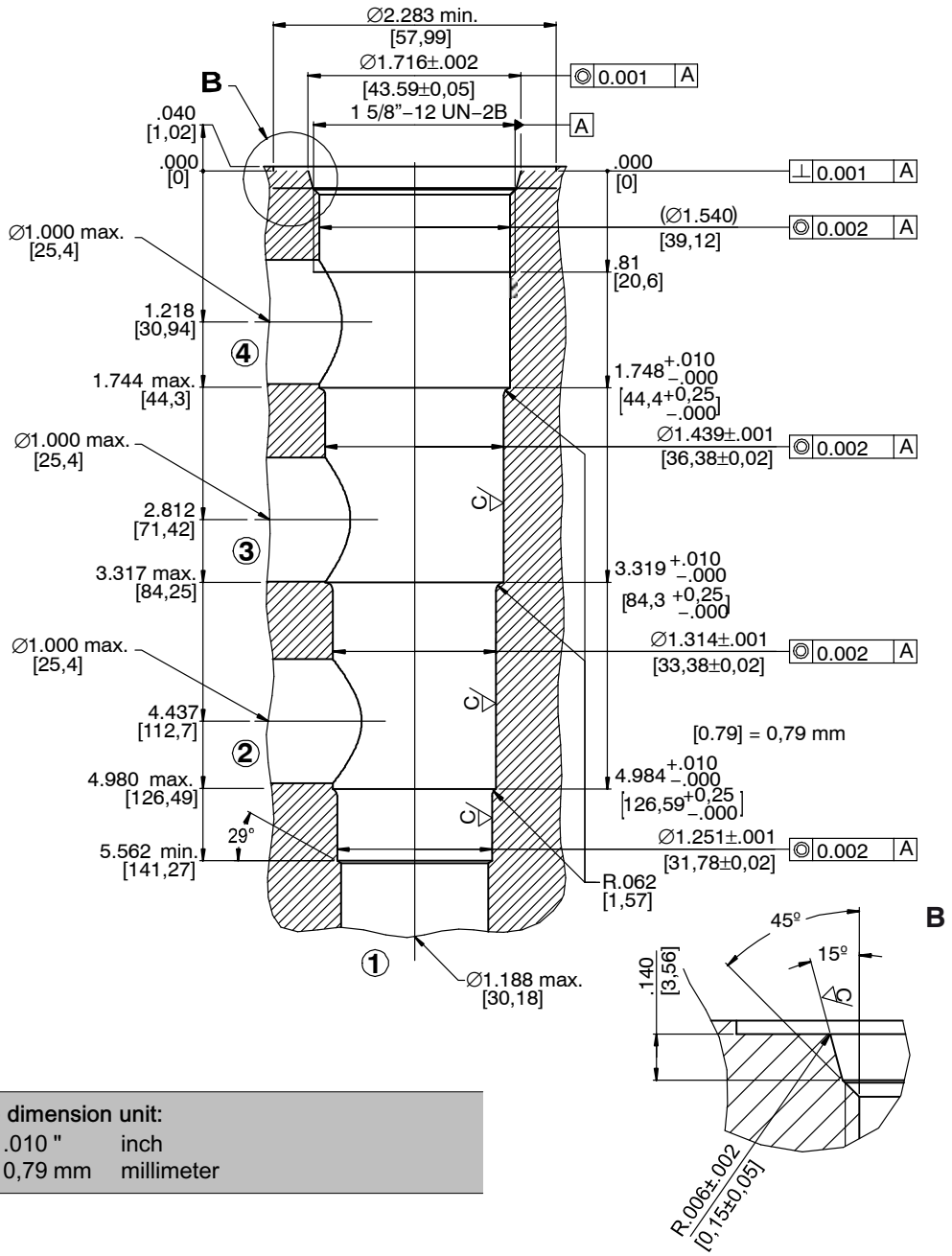

Example dimension unit:		
.010	= .010 "	inch
[0,79]	= 0,79 mm	millimeter

Dimension Tolerances	
Unless otherwise specified	
0.000	± .005″
0.00	± .010″
Angles	± 1/2°

Surface roughness		
Ra	C	D
	45 µin	125 µin
	(1.15 µm)	(3.2 µm)
	D Unless otherwise specified	

Reference: 520-P-000450-EN-00

1 Related data sheets

Reference	Description
520-P-000050	The form-tool selling programme

info.el@bucherhydraulics.com www.bucherhydraulics.com/commoncavity

© 2020 by Bucher Hydraulics, Inc., 2545 Northwest Parkway, Elgin, Illinois 60124, USA
All rights reserved.
Data is provided for the purpose of product description only, and must not be construed as warranted characteristics in the legal sense. The information does not relieve users from the duty of conducting their own evaluations and tests. Because the products are subject to continual improvement, we reserve the right to amend the product specifications contained in this catalogue.

Classification: 430.Cavity.…

Pressure Compensated Flow Control, SAE 20 / NG 16

Q_{max} = 60 gpm [230 l/min], p_{max} = 3000 psi [210 bar]
direct acting, slide piston design, hydraulic operated
Series PODS-20…

- Screw-in cartridge according to ISO 17209 – Common Cavity
- Compact construction
- For common cavities C2040 – 1 5/8-12 UN
- Reliable and high positive re-seat duration
- All external parts are zinc-plated for longer life
- All cartridges valves are 100% functionally tested

1 Description

Series PODS-20… pressure-compensated cartridges are size SAE 20 / NG 16, high performance screw-in cartridges with a 1 5/8-12 UN mounting thread.
This unit is a direct acting, screw in cartridge style, spool type, priority on demand pressure compensated flow control element. This unit is used to provide a load sense steering first with the priority flow when the steering demands the flow and the amount it requires before any other function in the system. When the steering or any other priority functions are satisfied, only then the excess flow is diverted to the auxiliary port for other functions. When the steering wheel is turned, the flow from port 3 is distributed to the priority port 4 when the system calls for it. The remaining flow is available to the rest of the working hydraulic system thru the excess port 2. The distribution is controlled by the load sense signal to port 1 from the steering unit, so the flow to the steering unit is always determined by the actual steering rate. All external parts of the cartridge are zinc plated and are thus suitable for use in the harshest operating environments.

2 Symbol

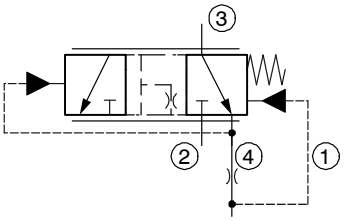

PODS-20…

3 Technical data

General characteristics	Description, value, unit
Designation	pressure-compensated flow control
Design	direct acting, slide piston design, hydraulic operated
Mounting method	screw-in cartridge 1 5/8-12 UN
Tightening torque	see chapter 5, dimensions & sectional view
Size	SAE 20 / NG 16 for cavity type C2040
Weight	3.10 lbs [1.41 kg]
Mounting attitude	unrestricted
Ambient temperature range	-40 °F…+248 °F [-40 °C…+120 °C]

Phase-out

WWW.SUMY.IR

Hydraulic characteristics	Description, value, unit	
Maximum operating pressure	3000 psi	[210 bar]
Maximum flow rate	60 gpm	[230 l/min]
Flow direction	see symbol	
Hydraulic fluid	HL and HLP mineral oil to DIN 51 524; for other fluids, please contact BUCHER	
Hydraulic fluid temperature range	-13 °F…+158 °F	[-25 °C…+70 °C]
Viscosity range	10…500 mm^2/s (cSt), recommended 15...250 mm^2/s (cSt)	
Minimum fluid cleanliness Cleanliness class to ISO 4406 : 1999	class 18/16/13	

4 Performance graphs

measured with oil viscosity 33 mm^2/s (cSt)

Q = f (Ø) Flow - Equivalent throttle orifice dia characteristic
flow 3 → 4 with 175 psi spring

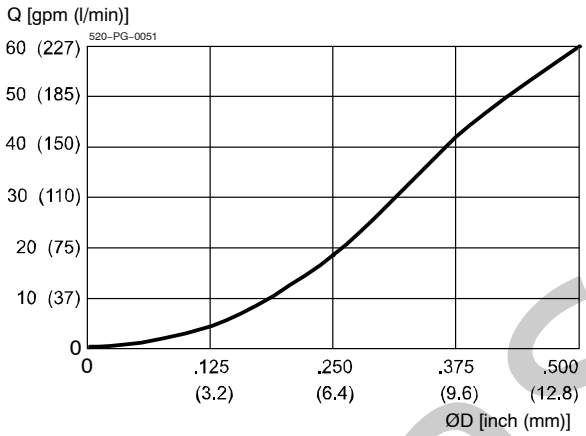

Phase-Out

5 Dimensions & sectional view

Dimensions in inches (millimeters)

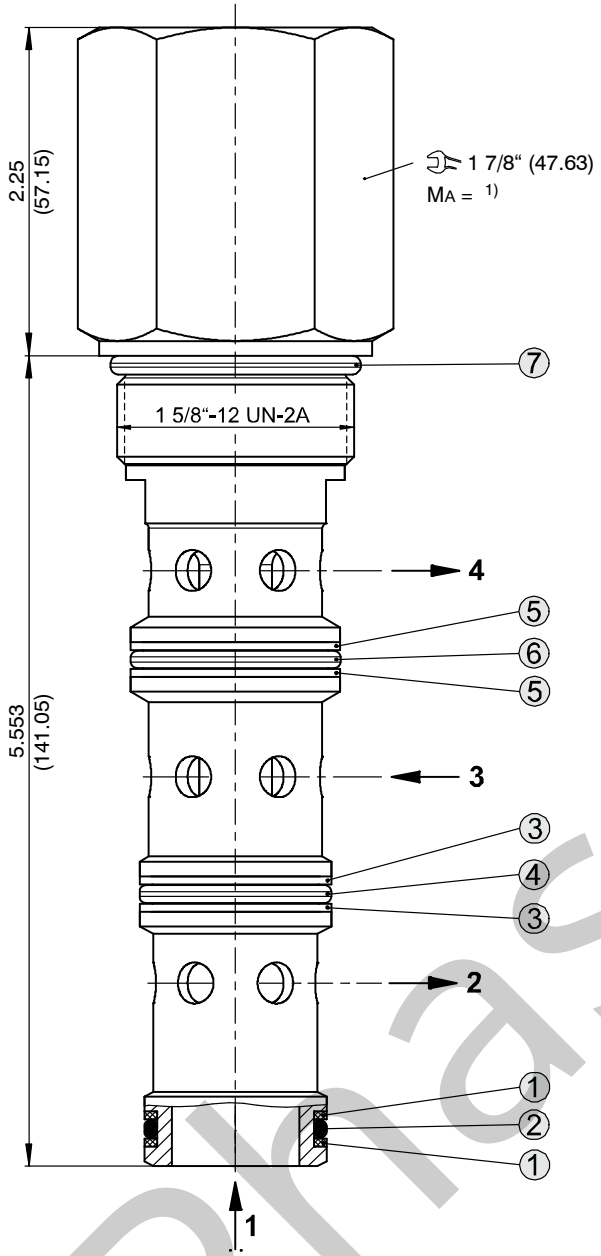

Tightening torque M_A [1] ± 10 %

Cavity type	C2040
When fitted in steel/aluminum	135 ft-lbs (183 [Nm])

6 Installation information

ATTENTION!
Only qualified personnel with mechanical skills may carry out any maintenance work. Generally, the only work that should ever be undertaken is to check, and possibly replace, the seals. When changing seals, oil or grease the new seals thoroughly before fitting them.

IMPORTANT!
When fitting the cartridges, use the specified tightening torque. No adjustments are necessary, since the cartriges are set in the factory.

Seal kit NBR no. SKN-2042 [2]

Item	Qty.	Description	
7	1	O-ring no. 920 ∅ 1.475 x 0.118 N90	Inch
6	2	O-ring no. 124 ∅ 1.237 x 0.103 N70	Inch
4	2	O-ring no. 122 ∅ 1.112 x 0.103 N70	Inch
2	2	O-ring no. 121 ∅ 1.049 x 0.103 N70	Inch
5	2	Backup ring no. 121	Inch
3	2	Backup ring no. 122	Inch
1	2	Backup ring no. 124	Inch

IMPORTANT!
[2] Seal kit with FKM (Viton) seals, no. SKV-2042

Phase-Out

7 Ordering code

PODS - 20 - N - F - 0 175

PODS	=	pressure-compensated flow control
20	=	size SAE 20 / NG 16
N	=	NBR (Nitrile) seals (**standard**)
V	=	FKM (Viton) seals (special seals - please contact BUCHER)
F	=	fixed only
0	=	cartridge only
16TA	=	line-mounting body SAE-#16 aluminum
16TS	=	line-mounting body SAE-#16 steel
175	=	175 psi compensator spring - other on request

8 Related data sheets

Reference (Old no.)	Description
520-P-000050	Form tools
520-P-000450	Cavity type C2040

Phase-Out

info.el@bucherhydraulics.com www.bucherhydraulics.com/commoncavity

© 2020 by Bucher Hydraulics, Inc., 2545 Northwest Parkway, Elgin, Illinois 60124, USA
All rights reserved.
Data is provided for the purpose of product description only, and must not be construed as warranted characteristics in the legal sense. The information does not relieve users from the duty of conducting their own evaluations and tests. Because the products are subject to continual improvement, we reserve the right to amend the product specifications contained in this catalogue.

Classification: 430.310.320.305.330.320

BUCHER hydraulics
WWW.SUMY.IR

General information
Cavity

Type series: DZ

Dimensions and sectional view

Beispiel für die Masseinheit:
Example for the dimensional units:
0.79 = 0.79 mm millimeter

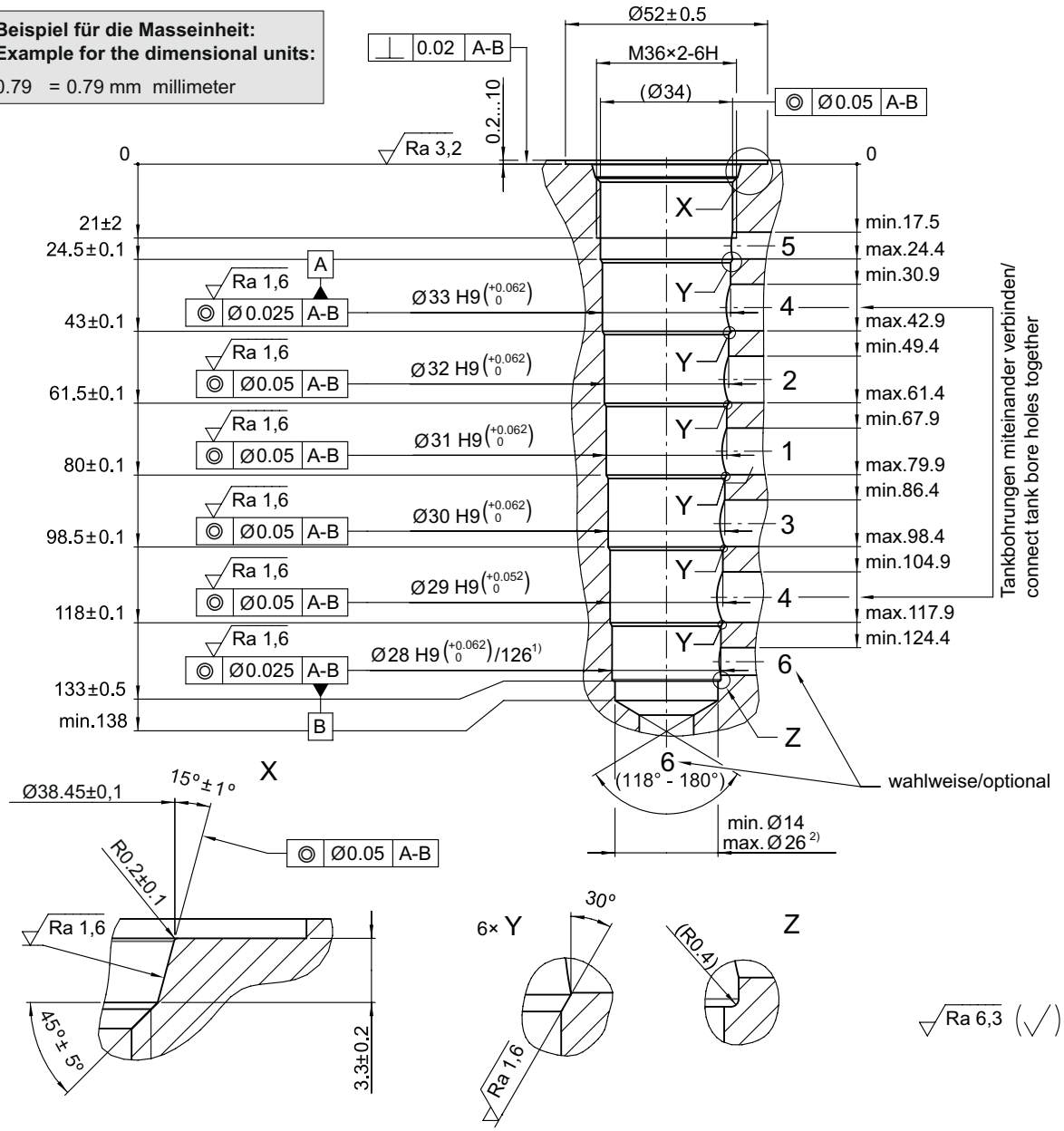

HINWEIS!
NOTE!

1) Passungstiefe
Minimum depth of specified diametral tolerance

2) Ø26 zu bevorzugen
Ø26 preferred

Anschlussbohrungen/connection bore holes	
1, 2, 3, 4	Ø11.0±0.2
5, 6	Ø4.0 (min.)

Installation information

ATTENTION!
You must maintain the specified positional and diametral tolerances. To ensure trouble-free operation of the screw-in cartridges, we strongly recommend that pilot drilling, boring, reaming and cavity thread-cutting are always performed in one setup.

NOTE!
Cavity type to factory standard.

info.ch@bucherhydraulics.com **www.bucherhydraulics.com**

© 2023 by Bucher Hydraulics AG Frutigen, 3714 Frutigen, Switzerland

All rights reserved.
Data is provided for the purpose of product description only, and must not be construed as warranted characteristics in the legal sense. The information does not relieve users from the duty of conducting their own evaluations and tests. Because the products are subject to continual improvement, we reserve the right to amend the product specifications contained in this catalogue.

Proportional 4/3 Throttle Cartridge, Size 10

Q_{max} = 150 l/min, p_{max} = 420 bar
Sliding-spool design, hydraulic proportional
Series MDHP43…-10…

- External hydraulic control
- Compact construction
  for cavity type DZ – M36x2
- Two nominal volume flow rates
- Different spool options (center position)
- Symmetrical opening characteristics
  (thanks to two separate tank ports)
- All exposed parts with zinc-nickel plating

1 Description

Series MDHP-43-10… hydraulically controlled proportional 4/3 throttle valves are size 10, high performance screw-in cartridges with an M36x2 mounting thread. The sliding spool is held in neutral position by the spring. As soon as the pilot pressure of around 5 bar is reached, the spool starts to open the connection from port 1 to the actuator (port 2 or 3). The opening cross-section increases proportionally with increasing pilot pressure until the end position of the spool and thus the maximum opening or flow rate is reached at approx. 18 bar. Thanks to two separate tank ports (see sectional drawing), symmetrical opening characteristics are reached on both sides. In addition to two spool designs (G or D spool), there is a choice of two nominal flow rats with defined pressure loss using a control edge in each case. Thus, an optimal resolution of the opening cross-section can be achieved for the application. These valves are primarily used in mobile and industrial applications where high flow rates need to be controlled with high resolution. All external parts of the cartridge are zinc-nickel plated according to DIN EN ISO 19 598 and are thus suitable for use in the harshest operating environments. For self-assembly, please refer to the section related data sheets.

2 Symbol

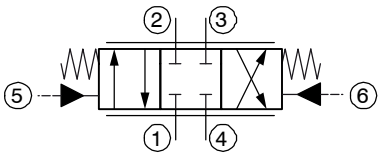

MDHP43D…

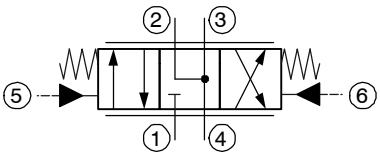

MDHP43G…

3 Technical data

General characteristics	Description, value, unit
Designation	proportional 4/3 throttle cartridge
Design	sliding-spool design, hydraulic proportional
Mounting method	screw-in cartridge M36x2
Tightening torque	250 Nm ± 10 %
Size	nominal size 10, cavity type DZ
Weight	1.05 kg
Mounting attitude	unrestricted
Ambient temperature range	-25 °C … +50 °C

Hydraulic characteristics		Description, value, unit
Maximum operating pressure	- ports 1 to 4 - ports 5 and 6	420 bar 30 bar
Maximum flow rate		150 l/min
Nominal flow rate		80 l/min at Δp = 10 bar 100 l/min at Δp = 10 bar
Flow direction		see symbols
Hydraulic fluid		HL and HLP mineral oil to DIN 51 524; for other fluids, please contact BUCHER
Hydraulic fluid temperature range		-25 °C … +70 °C
Viscosity range		15…380 mm^2/s (cSt), recommended 20...130 mm^2/s (cSt)
Minimum fluid cleanliness Cleanliness class to ISO 4406 : 1999		class 18/16/13

4 Performance graphs measured with oil viscosity 33 mm^2/s (cSt)

Δp = f (Q) Pressure drop - Flow rate characteristic

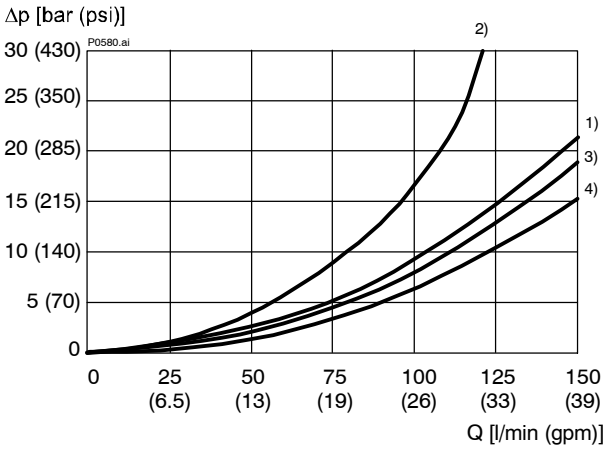

Q_N = 100 l /min
1) 1 → 2; 1 → 3 "G", "D" Kolben/spool
3) 2 → 4; 3 → 4 "D" Kolben/spool
4) 2 → 4; 3 → 4 "G" Kolben/spool

Q_N = 80 l /min
2) 1 → 2; 1 → 3 "G", "D" Kolben/spool
3) 2 → 4; 3 → 4 "D" Kolben/spool
4) 2 → 4; 3 → 4 "G" Kolben/spool

Q = f (p_V) Flow rate adjustment
[measured at Δp = 10 bar over control edge 1 to 2 or 1 to 3]

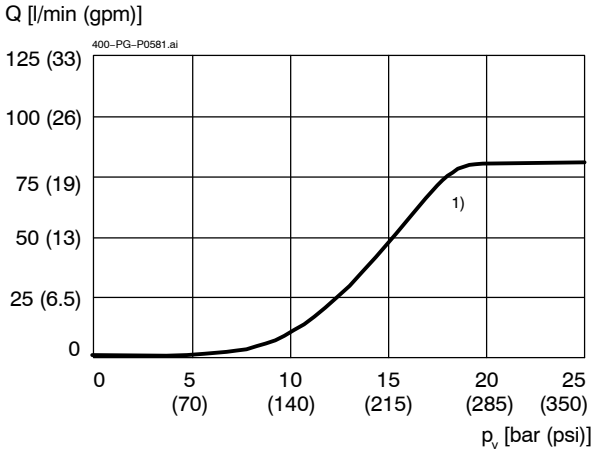

1) Q_N 80 [l/min] "D", "G" Kolben/spool

Q = f (p_V) Flow rate adjustment
[measured at Δp = 10 bar over control edge 1 to 2 or 1 to 3]

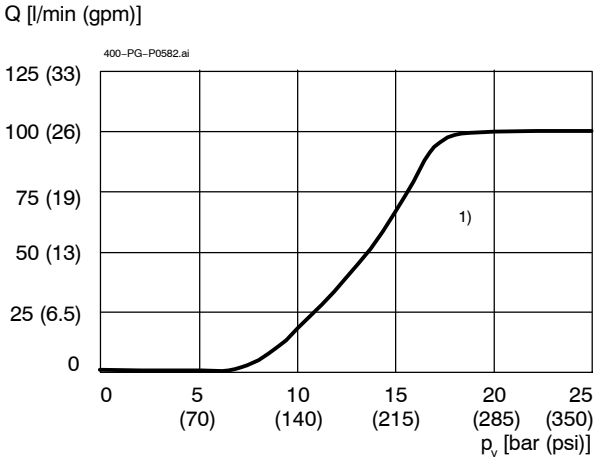

1) Q_N 100 [l/min] "D", "G" Kolben/spool

5 Installation information

IMPORTANT!
When fitting the cartridges, the tightening torque of the fixing screws must be considered. No adjustments are necessary, since the cartridges are set in the factory.

ATTENTION!
Only qualified personnel with mechanical skills may carry out any maintenance work. Generally, the only work that should ever be undertaken is to check, and possibly replace, the seals. When changing seals, oil or grease the new seals thoroughly before fitting them.

6 Dimensions & sectional view

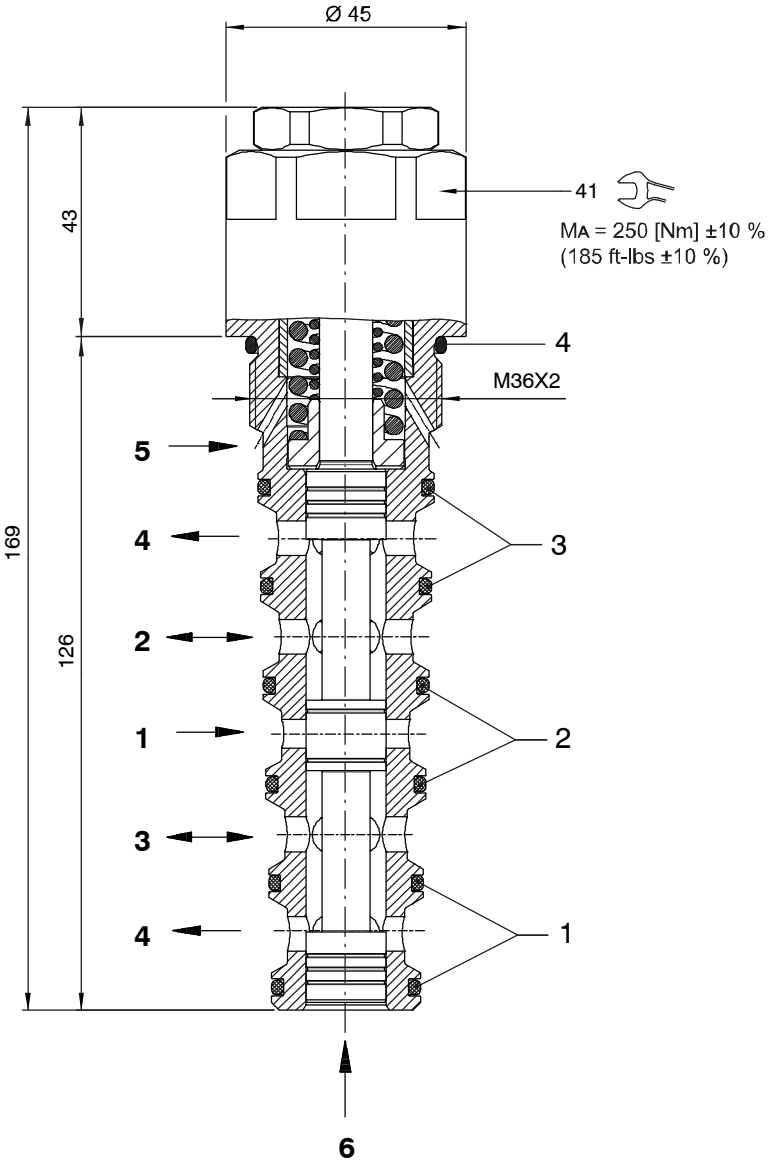

Seal kit NBR/PU no. DS-513-NU

Item	Qty.	Description			
1	2	O-ring	no. 119	∅ 23, 47 x 2,62	PU92
2	2	O-ring	no. 120	∅ 25,07 x 2,62	PU92
3	2	O-ring	no. 121	∅ 26,64 x 2,62	PU92
4	1	O-ring	no. 124	∅ 31,42 x 2,62	N90

7 Ordering code

Ex. M D H P 43D Z A - 10 U - 80 - 0518 - 1

M	=	flow-control valve
D	=	throttle function, direct acting
H	=	hydraulically operated
P	=	proportional
43D	=	4-way/3-position, spool type D
43G	=	4-way/3-position, spool type G
Z	=	cavity type DZ
A	=	standard model - see relevant data sheets
Z	=	special features - please consult BUCHER
10	=	nominal size 10
U	=	PU (Polyurethane) seals and NBR (Nitrile) seals **(standard)** (special seals - please consult BUCHER)
80	=	80 l/min Q_N 1-2 / 1-3 at Δp = 10 bar
100	=	100 l/min Q_N 1-2 / 1-3 at Δp = 10 bar
0518	=	actuation range (set pressure range)
1 ... 9	=	design stage (omit when ordering new units)

8 Related data sheets

Reference	(Old no.)	Description
400-P-060291	(i-33.12)	Cavity type DZ

info.ch@bucherhydraulics.com www.bucherhydraulics.com

© 2021 by Bucher Hydraulics AG Frutigen, CH-3714 Frutigen
All rights reserved.
Data is provided for the purpose of product description only, and must not be construed as warranted characteristics in the legal sense. The information does not relieve users from the duty of conducting their own evaluations and tests. Because the products are subject to continual improvement, we reserve the right to amend the product specifications contained in this catalogue.

Classification: 430.310.325.305.310.310

BUCHER hydraulics

WWW.SUMY.IR

Flow valve
Throttle valve

Q_{max} = 45 l/min, p_{max} = 250 bar
Direct acting, spool type, proportional solenoid
Type series: MDRP-G-10-DD-...

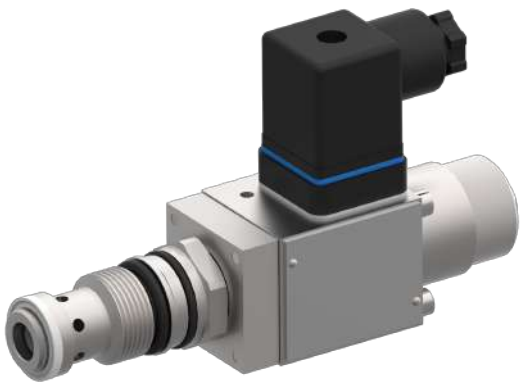

- Screw-in cartridge valve for cavity DD
- All external parts with zinc-nickel plating according to DIN EN ISO 19598
- Installation in threaded port body type DD-12
- High pressure wet-armature solenoids
- Various plug-connector systems and voltages are available

Symbol

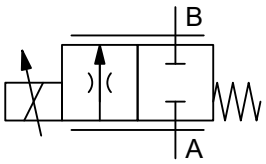

Description

The direct acting proportional throttle valve is a high-performance threaded screw-in cartridge valve in size 10. The valve is designed on the sliding-spool principle. When de-energized, the connection A to B is disabled. When energized, the flow rate from A to B can be adjusted in proportion to the change in the required value (current). In both mobile and industrial applications, these valves are the ideal choice for responsive and controlled lifting and lowering movements where large pressure differentials exist. The types "300" and "400" with nominal flow rates of 30 and 40 l/min must only be used in combination with an inline compensator or a bypass hydrostat (see "Technical Data").

Technical data

General characteristics	Description, value, unit
Function group	flow valve
Function	throttle valve
Design	screw-in cartridge valve
Controls	proportional solenoid
Characteristic	direct acting, spool type
Construction size	NG 10
Thread size	M24×1,5
Mounting attitude	unrestricted (preferably vertical, coil down)
Weight	1.15 kg
Cavity acc. factory standard	DD
Tightening torque steel	65 Nm
Tightening torque aluminium	50 Nm
Tightening torque tolerance	± 10 %
Minimum ambient temperature	- 30 °C
Maximum ambient temperature	+ 50 °C
Surface protection	all external parts with zinc-nickel plating according to DIN EN ISO 19598
Sealing material	see ordering code
Seal kit order number	NBR: DS-265-N / FKM: DS-265-V

Hydraulic characteristics	Description, value, unit
Maximum operating pressure	250 bar
Maximum flow rate	45 l/min
Nominal flow rate	Einsatz mit Druckwaagepatrone: 40 l/min: max. Δp 9 bar 30 l/min: max. Δp 14 bar Einsatz ohne Druckwaagepatrone: 20 l/min 12 l/min
Flow direction	see symbol
Hydraulic fluid	HL and HLP mineral oil according to DIN 51 524; other fluids on request!
Minimum fluid temperature	- 30 °C
Maximum fluid temperature	+ 70 °C
Viscosity range	15 ... 380 mm^2/s (cSt)
Recommended viscosity range	20 ... 130 mm^2/s (cSt)
Minimum fluid cleanliness (cleanliness class according to ISO 4406:1999)	class 18/16/13

Electric characteristics	Description, value, unit
Actuator type	solenoid coil
Solenoid coils type	☐36
Supply voltage DC	12 V DC 24 V DC
Control current	12 V = 0...1400 mA 24 V = 0...700 mA
Relative duty cycle	100 %
Coil resistance R	cold value at 20°C : 12 V = 6.4Ω / 24V = 24.5Ω , cold value at -25°C : 12 V = 5.2Ω / 24V = 20.0Ω , max. warm value: 12 V = 10.0Ω / 24V = 38.4Ω
Inductance	Non-operated measured, at 0,1 mArms / 1 kHz 12 V = 13 mH / 24 V = 54 mH
Recommended PWM frequency	150...200 Hz
Response sensitivity with PWM	< 1 % I_{max}
Reproducibility with PWM	< 2 % Q_{nenn}
Hysteresis with PWM	2...4 % I_{max}
Reversal error with PWM	2...4 % I_{max}
Electrical connection coil	DIN EN 175301-803, 3-pole 2 P+E (IP 65)
Protection class solenoid coil to ISO 20 653 / EN 60 529	IP65, see Ordering code

Performance graphs

measured with oil viscosity 33.0 mm²/s (cSt)

Δp = f (Q) Pressure drop-flow rate characteristic

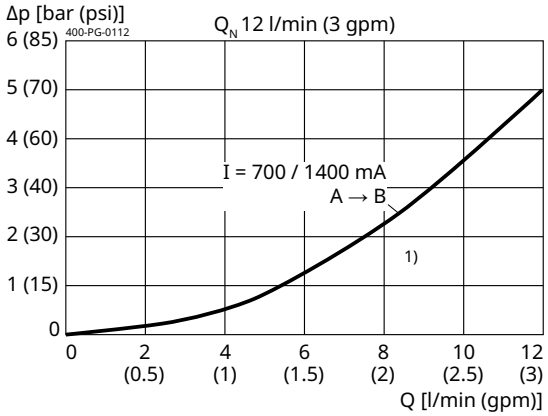

Δp = f (Q) Pressure drop-flow rate characteristic

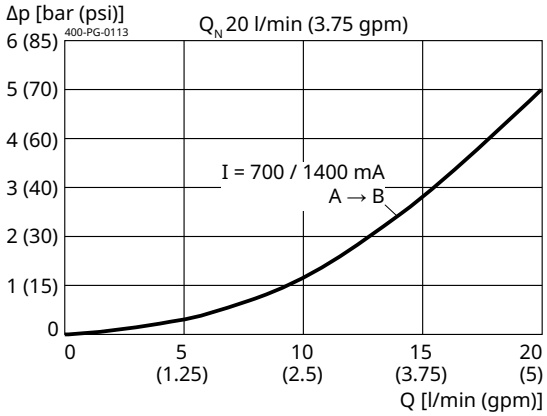

Δp = f (Q) Pressure drop-flow rate characteristic

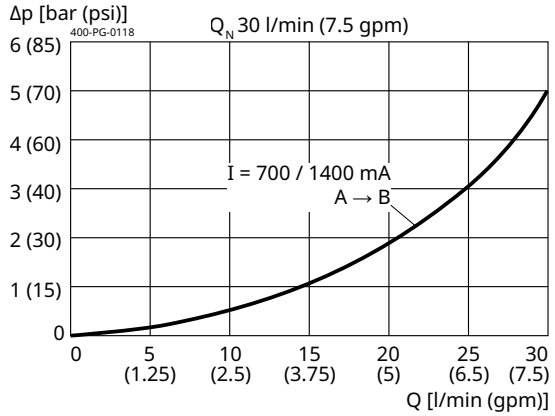

Δp = f (Q) Pressure drop-flow rate characteristic

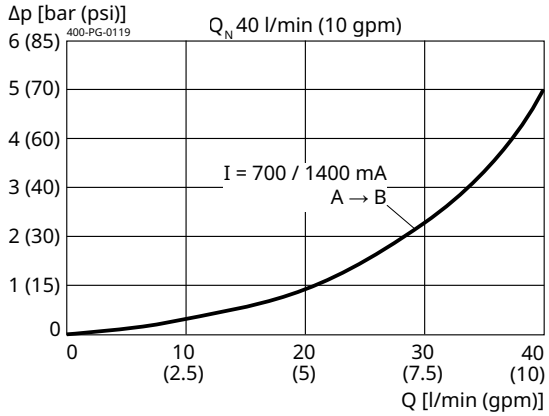

Q = f (Δp:I) Flow rate adjustment

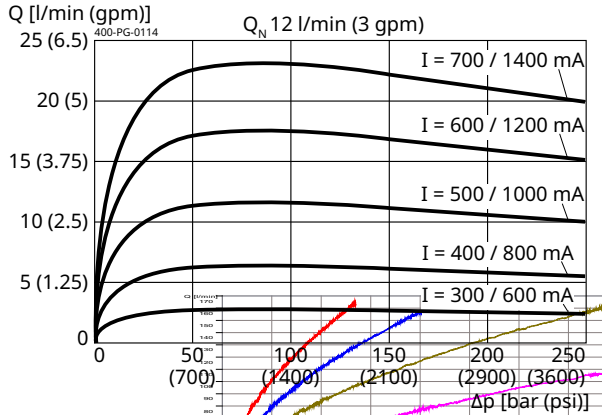

Q = f (Δp:I) Flow rate adjustment

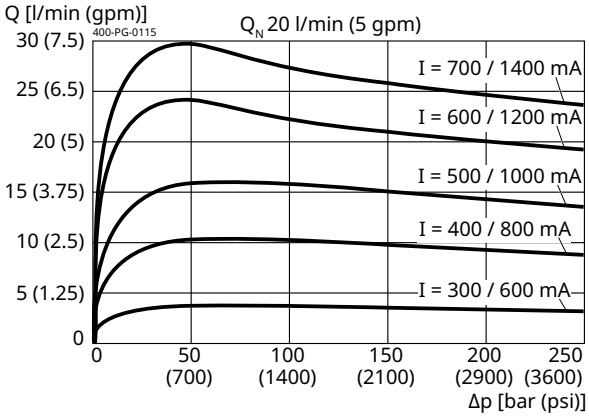

Q = f (Δp:I) Flow rate adjustment

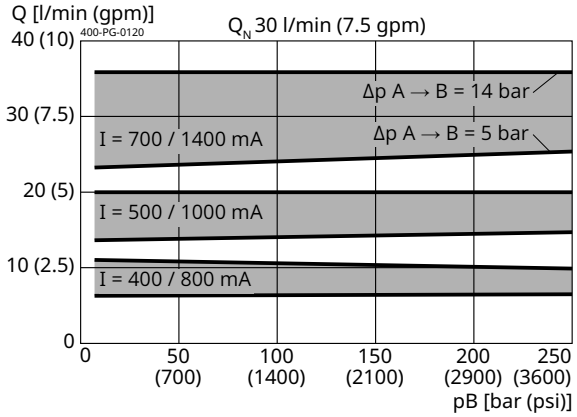

Q = f (Δp:I) Flow rate adjustment

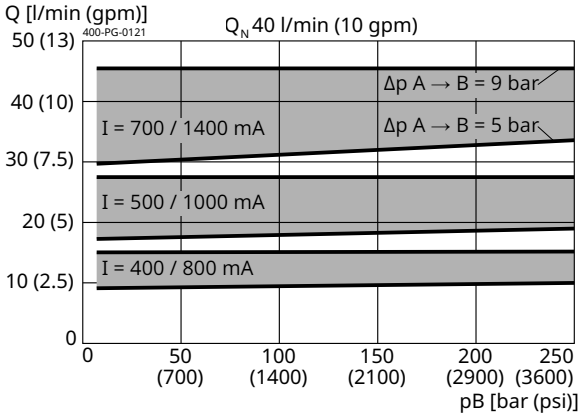

WWW.SUMY.IR

Q = f (I:Δp) Flow rate adjustment

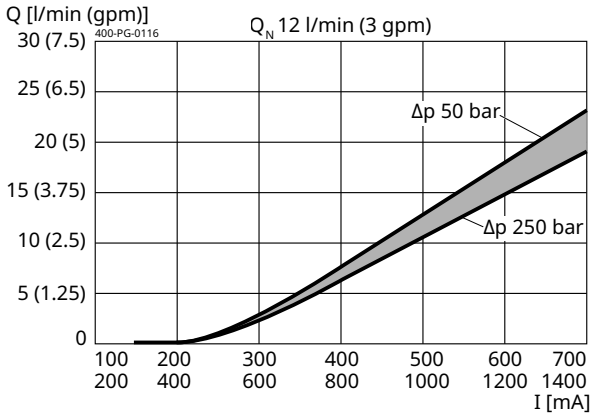

Q = f (I:Δp) Flow rate adjustment

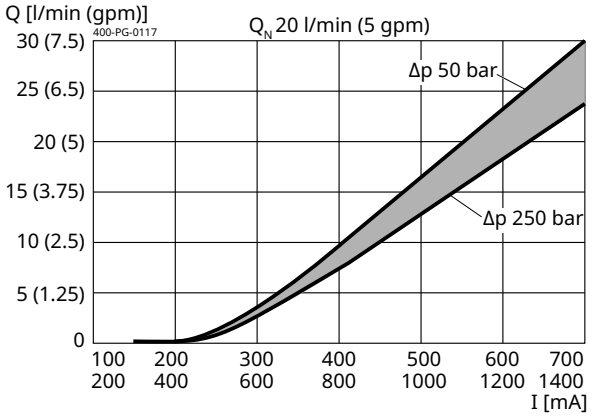

Q = f (I:Δp) Flow rate adjustment

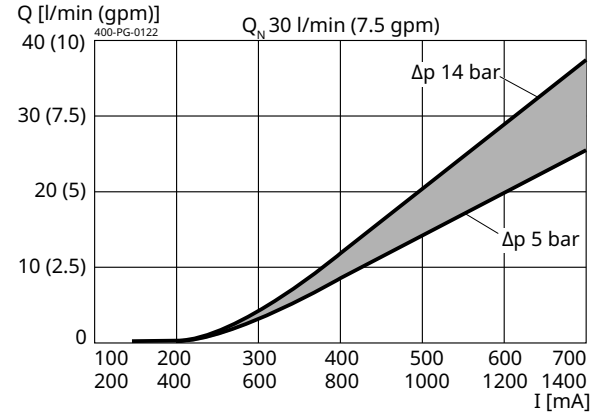

Q = f (I:Δp) Flow rate adjustment

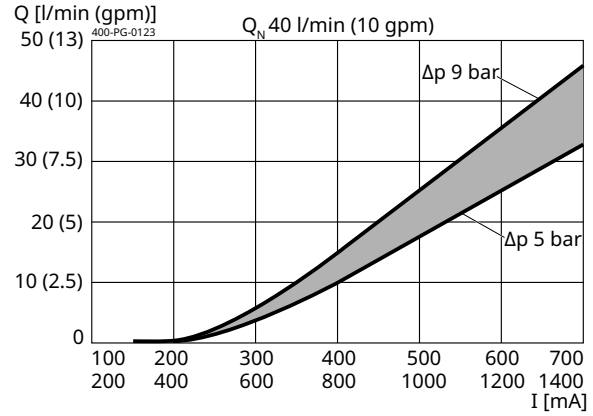

Installation

Beispiel für die Masseinheit:
Example for the dimensional units:

0.79 = 0.79 mm millimeter
(.031) = 0.031'' inch

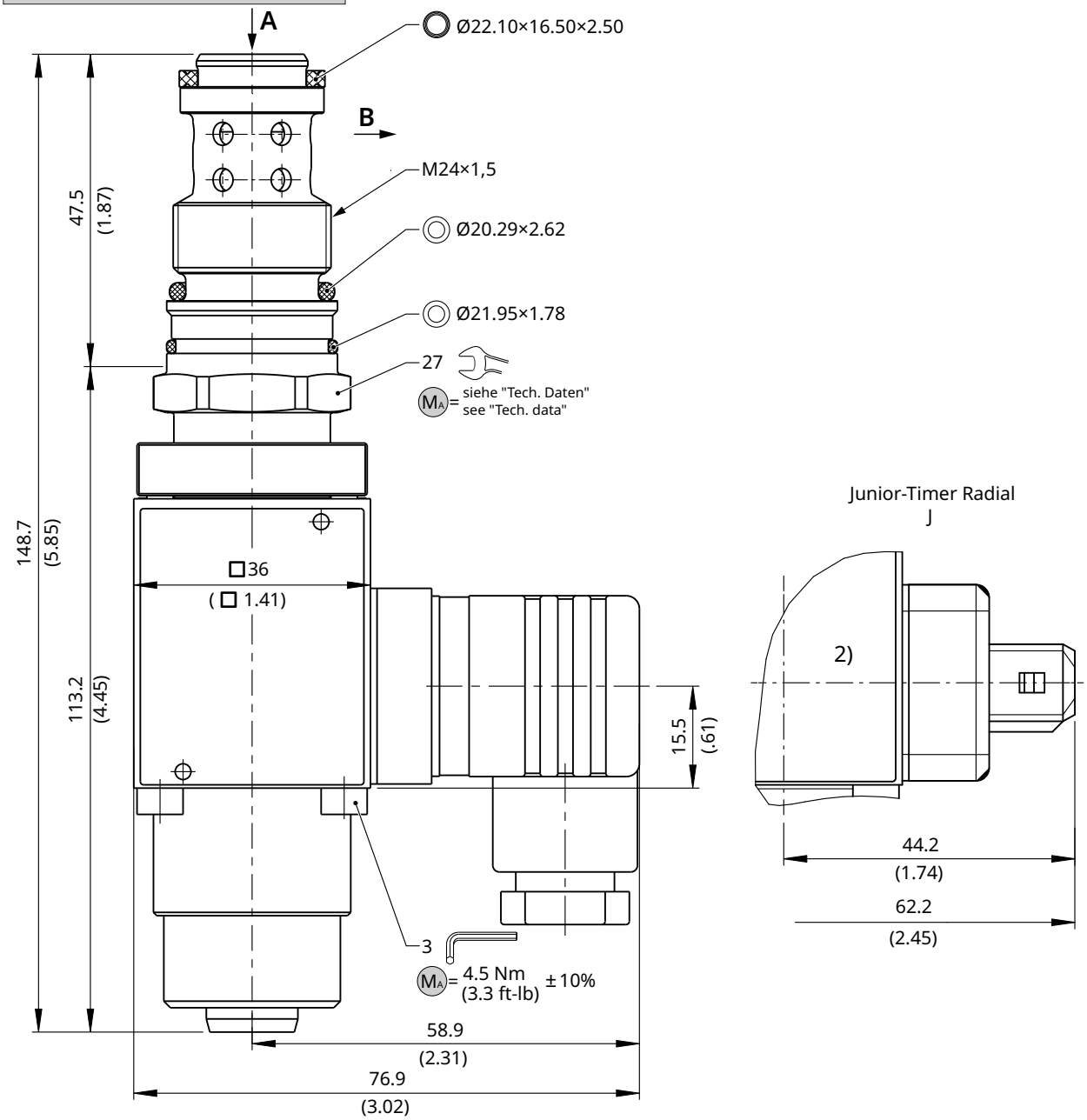

NOTE!

- Observe tightening torques M_A.
- Mount the valve preferably suspended (automatic air bleed).
- The valve is factory-set, no further adjustments are necessary.

ATTENTION!

Only qualified personnel with mechanical skills may carry out the following work:

- installation and, if necessary, adjustment.
- inspection and, if necessary, replacement of the seals shown in the illustration. New seals must only be installed after being oiled or greased (seal kit; see "Technical Data").

WWW.SUMY.IR

Solenoid orientation

1. Slightly loosen the mounting bolts 1.
2. Align the solenoid 2 so that the plug connector 3 is facing the required direction.
3.

INFO
Before tightening the mounting bolts 1, make sure there is an even gap 5 all around between the flange 4 and the solenoid 2.

Tighten the mounting bolts 1 on the flange 4.

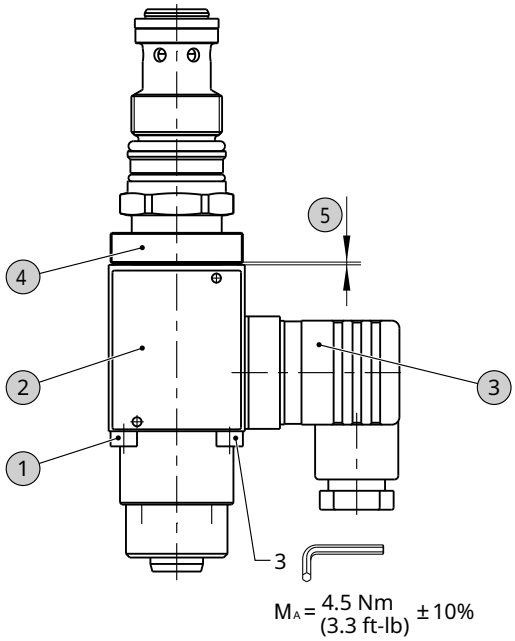

Application examples

Used without pressure compensator

The types "120" and "200" with nominal flow rates of 12 and 20 l/min can be used in applications in which a maximum Δp from A to B of 250 bar may occur.

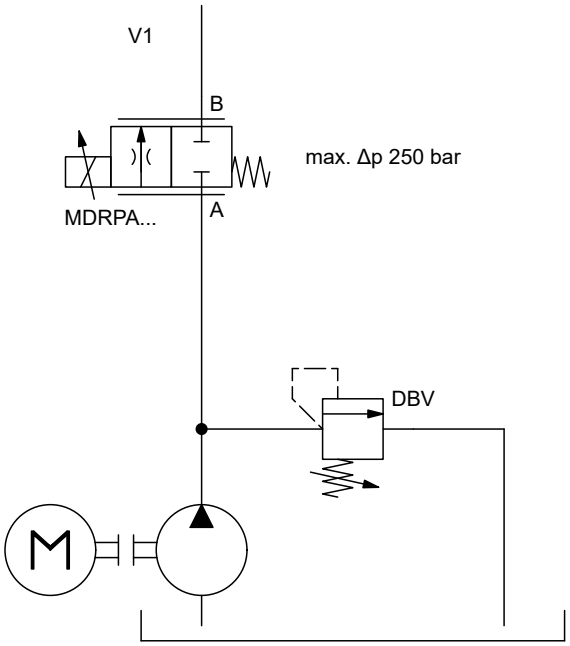

Used with pressure compensator

The types "300" and "400" with nominal flow rates of 30 and 40 l/min must only be used in combination with pressure-compensator cartridges. A bypass compensator can also be used instead of an inline compensator:

- Q_N 30 l/min: max. Δp 14 bar
- Q_N 40 l/min: max. Δp 9 bar

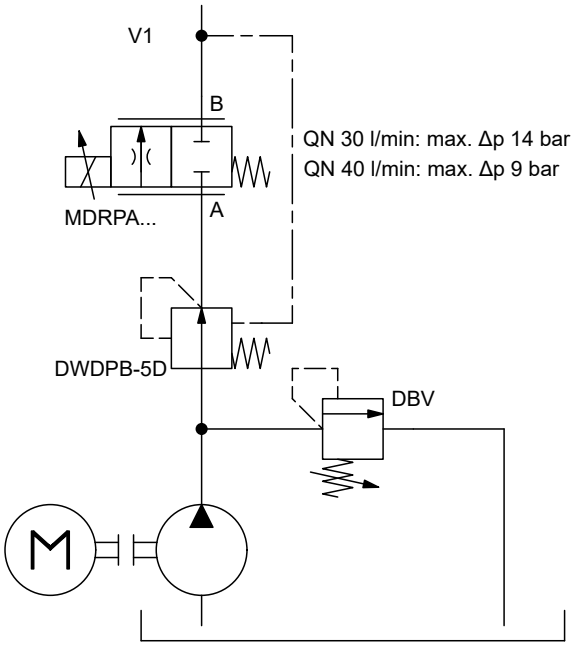

Ordering code

Ex. MD R P A - D G - 10 - 120 _ - 5 24 D _

MD	=	throttle valve, direct acting
R	=	proportional-solenoid operated
P	=	cartridge design
A ... Q	=	standard model according to valid data sheet
Z ... R	=	special model (on request)
D	=	cavity type DD
G	=	de-energized closed
10	=	nominal size 10
120	=	nominal flow rate = 12 l/min
200	=	nominal flow rate = 20 l/min
300	=	nominal flow rate = 30 l/min: max. Δp 14 bar
400	=	nominal flow rate = 40 l/min: max. Δp 9 bar
(blank)	=	NBR (nitril-butadien-rubber / BUNA) seals (standard)
V	=	FKM (fluorocarbon rubber / VITON) seals (special seals on request)
1 ... 9	=	technical design no. (omit when ordering)
...	=	voltage e.g. 24 (24 V)
D	=	current DC
(blank)	=	DIN EN 175301-803 mating plug 3-pole 2 P+E (standard, IP65)
M100	=	DIN EN 175301-803 connection, 3-pole 2 P+E (IP 65) } connection without mating plug
J	=	Junior Timer plug connection, 2-pole radial (IP 65) } connection without mating plug

HINWEIS!
Die Typen "300" und "400" mit Nennvolumenstrom 30 und 40 l/min dürfen nur in Kombination mit einer Inline- oder Bypass-Druckwaagepatrone eingesetzt werden (siehe "Technische Daten").

Related data sheets

Reference	Description
400-P-040011	form tools
400-P-060121	cavity DD
400-P-740111	threaded port body DD-12

info.ch@bucherhydraulics.com www.bucherhydraulics.com

© 2026 by Bucher Hydraulics AG Frutigen, 3714 Frutigen, Switzerland

All rights reserved.
Data is provided for the purpose of product description only, and must not be construed as warranted characteristics in the legal sense. The information does not relieve users from the duty of conducting their own evaluations and tests. Because the products are subject to continual improvement, we reserve the right to amend the product specifications contained in this catalogue.

BUCHER hydraulics

PROPORTIONAL, NORMALLY CLOSED OR NORMALLY OPEN, IN-LINE, NON-COMPENSATED FLOW CONTROL VALVE.

WWW.SUMY.IR

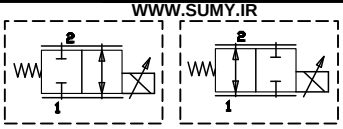

UL approved coil, IP68 and IP69K rated when used with waterproof connector.

TORQUE:
Steel = 55/60 Ft-Lb. [74/81 Nm]
Aluminum = 35/40 Ft-Lb. [47/54 Nm]

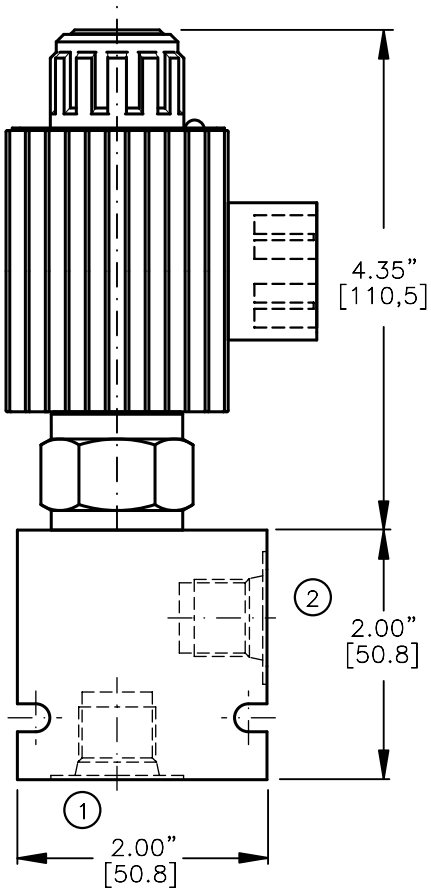

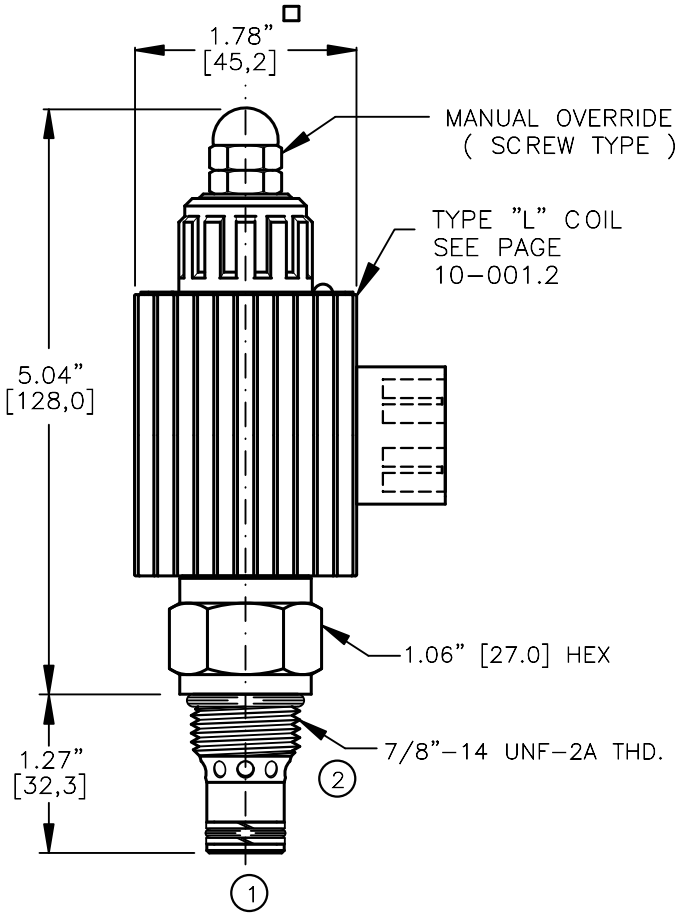

NOTES:
1. FOR ALUMINUM OR STEEL VALVE HOUSING CONFIGURATIONS SEE PAGE 0-012.1
2. SOLENOIDS AVAILABLE WITH DIODES - CONSULT FACTORY.

PFCV-10-X-X-XX-X-X-XXX X

BASIC

SIZE
10 = 7/8"-14UNF

SEALS
N = BUNA "N"
V = VITON

STYLE
C = NORMALLY CLOSED
O = NORMALLY OPEN

REGULATED FLOW
04 = 0 TO 4.0 GPM
08 = 0 TO 8.0 GPM
12 = 0 TO 12.0 GPM
16 = 0 TO 16.0 GPM

"A" = ALUM. HOUSING
"S" = STEEL HOUSING

PORTS
0 = CARTRIDGE ONLY
02BX = G 1/4" BSPP
03BX = G 3/8" BSPP
06TX = SAE - #6
08TX = SAE - #8

ADJUSTMENT OPTIONS
O = NONE
M = MANUAL OVERRIDE

TERMINALS
L = 18GA. 24" LEADS
T = SPADE TERM.
B = BOLT TERM.
G = DIN43650
W = WEATHER-PACK
D = DEUTSCH-DT04-2P
M = METRI-PACK CONN.

VOLTAGE AMPS
12D = 12 VDC 3.00
24D = 24 VDC 1.50

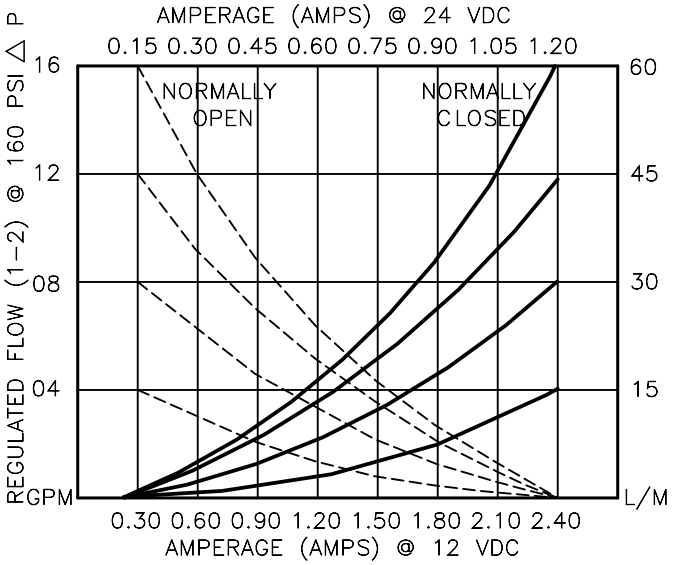

BUCHER hydraulics

WWW.SUMY.IR

PROPORTIONAL, IN–LINE TYPE, FLOW CONTROL VALVE.

DESCRIPTION

This valve is a cartridge style, electro–hydraulic, proportional, in–line (RESTRICTIVE) type, hydraulic non–compensated flow control.
Regulated flow Normally Closed 0 to 16.0 GPM [0 to 61,0 L/m] max.
Normally Open 16.0 to 0 GPM [61,0 to 0 L/m] @ 160 PSI DELTA P.
Flow is proportional to the current input.

OPERATIONS

This unit is a direct acting (NO PILOT FLOW), electro hydraulic, pro–portional, non–compensated, flow control valve. When the coil is energized the armature moves the metering orifice to open or to closed position against a precision bias spring varying the flow.
When current is increased or decreased to the coil, the flow will increase or decrease proportionally.
IN THE EVENT OF POWER FAILURE THE VALVE WILL CLOSE OR OPEN DEPENDING ON THE VALVE VERSION.

FEATURES AND BENEFITS

Continuous–duty, very low heat rise & waterproof solenoid coil.
Interchangeable solenoid coils & termination options available.
Hardened precision fitted spool & sleeve provides reliable, long life.
Very efficient wet – armature solenoid core tube construction.
All external carbon steel parts are plated for longer life against the elements.
All cartridge valves are 100% functionally tested.
Industry common cavity.

BUCHER hydraulics

WWW.SUMY.IR

PROPORTIONAL, IN–LINE TYPE, FLOW CONTROL VALVE.

SPECIFICATIONS

OPERATING PRESSURE: 5,000 PSI [350 Bar]
PROOF PRESSURE: 10,000 PSI [700 Bar]
REGULATED FLOW: 16.0 GPM [61,0 L/m] Max. See performance chart.
INTERNAL LEAKAGE: 20 cu.in/min [330 cc/m] @ 160 PSI DELTA P [11 Bar]
VALVE HOUSINGS: 2500 PSI [175 Bar] = Aluminum – Anodized.
5000 PSI [350 Bar] = Steel – Unplated.
OPERATING TEMPERATURE: –40° to +250° F. [–40° to +120° C.]
OPERATING MEDIA: All general purpose hydraulic fluids such as MIL–H–5606, SAE–#10, SAE–#20, etc.
RESPONSE: The most efficient method to control this valve is with current control and a 50 Hz dither.
POWER REQUIREMENTS: 12 VDC, Operating current 0.4 to 2.4 AMPS.
24 VDC, Operating current 0.2 to 1.2 AMPS.
SEAL KIT: SKN–1022 Buna "N"
SKV–1022 Viton
INSTALLATION: Flow 1–2 preferred, Max Flow 2–1 lower than shown on graph. Use undercuts in cavity to obtain max rated flow when using a pressure compensator in series. Pressure drop across valve must not exceed 300 PSI [21] bar.

WEIGHT: 0.74 lbs [0,34 kg] cartridge only.
1.09 lbs [0,50 kg] coil & housing.
0.35 lbs [0,16 kg] aluminum body.
1.20 lbs [0,54 kg] steel body.
VALVE CAVITY: #C1020, See Page 0–012.0.

info.el@bucherhydraulics.com www.bucherhydraulics.com/commoncavity

© 2015 by Bucher Hydraulics, Inc., 2545 Northwest Parkway, Elgin, Illinois 60124, USA
All rights reserved.
The technical information in this catalog, may contain calculated figures (for reference only) and not actual performance data for this product. Data is provided for the purpose of product description only, and must not be construed as warranted characteristics in the legal sense. The information does not relieve users from the duty of conducting their own evaluations and tests. Because the products are subject to continual improvement, we reserve the right to amend the product specifications contained in this catalogue.

BUCHER hydraulics

PROPORTIONAL, NORMALLY CLOSED OR NORMALLY OPEN, IN–LINE, NON–COMPENSATED FLOW CONTROL VALVE.

WWW.SUMY.IR

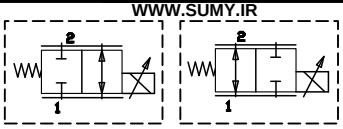

UL approved coil, IP68 and IP69K rated when used with waterproof connector.

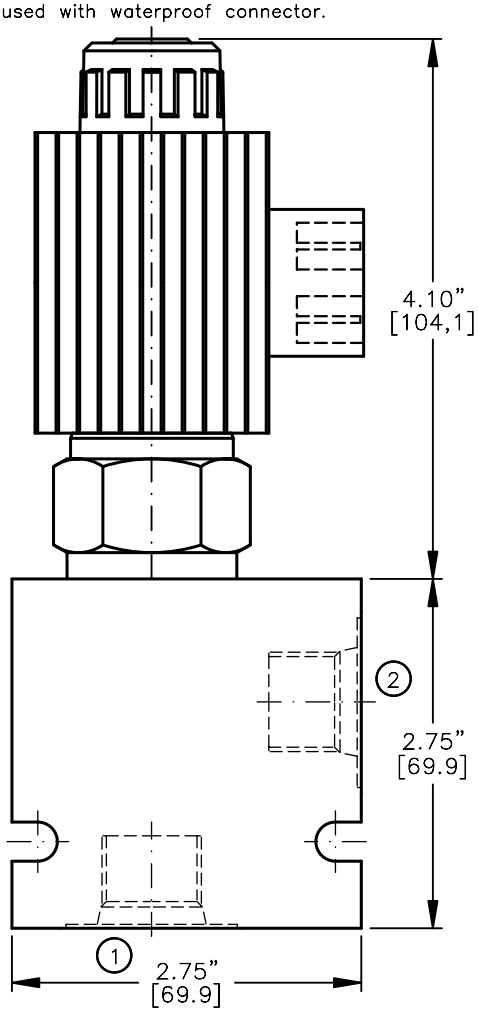

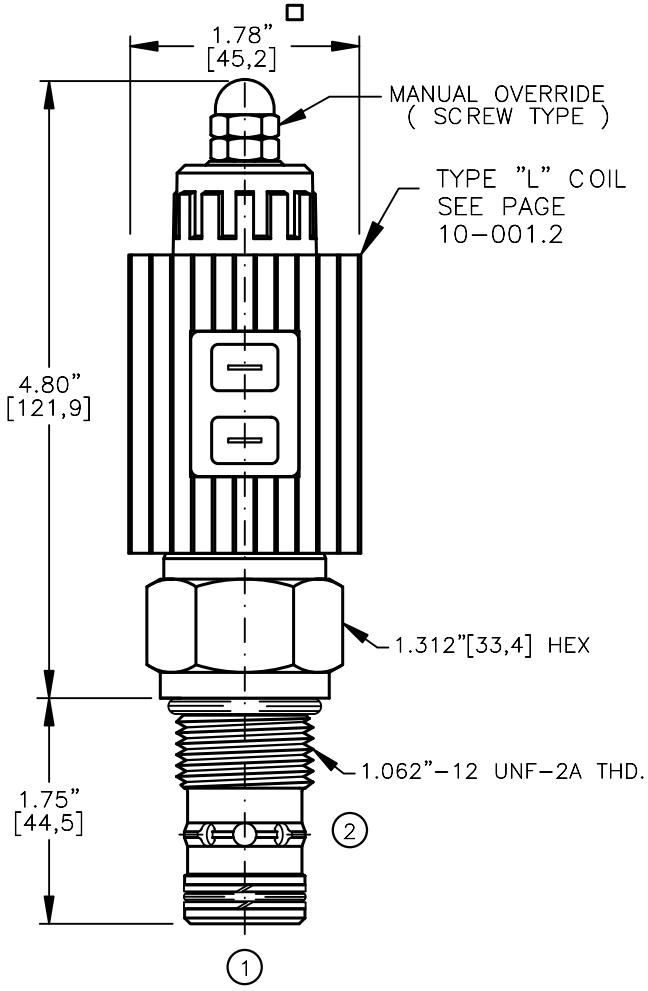

TORQUE:
Steel = 70/75 Ft–Lb. [95/102 Nm]
Aluminum = 55/60 Ft–Lb. [74/81 Nm]

PFCV–12–X–X–XX–X–X–XXX X

BASIC

SIZE
12 = 1.062"–12UNF

SEALS
N = BUNA "N"
V = VITON

STYLE
C = NORMALLY CLOSED
O = NORMALLY OPEN

REGULATED FLOW
06 = 0 TO 6.0 GPM
12 = 0 TO 12.0 GPM
18 = 0 TO 18.0 GPM
24 = 0 TO 24.0 GPM

"A" = ALUM. HOUSING
"S" = STEEL HOUSING

PORTS
0 = CARTRIDGE ONLY
04BX = G 1/2" BSPP
06BX = G 3/4" BSPP
10TX = SAE – #10
12TX = SAE – #12

ADJUSTMENT OPTIONS
O = NONE
M = MANUAL OVERRIDE

TERMINALS
L = 18GA. 24" LEADS
T = SPADE TERM.
B = BOLT TERM.
G = DIN43650
W = WEATHER–PACK
D = DEUTSCH–DT04–2P
M = METRI–PACK CONN.

VOLTAGE AMPS
12D = 12 VDC 3.00
24D = 24 VDC 1.50

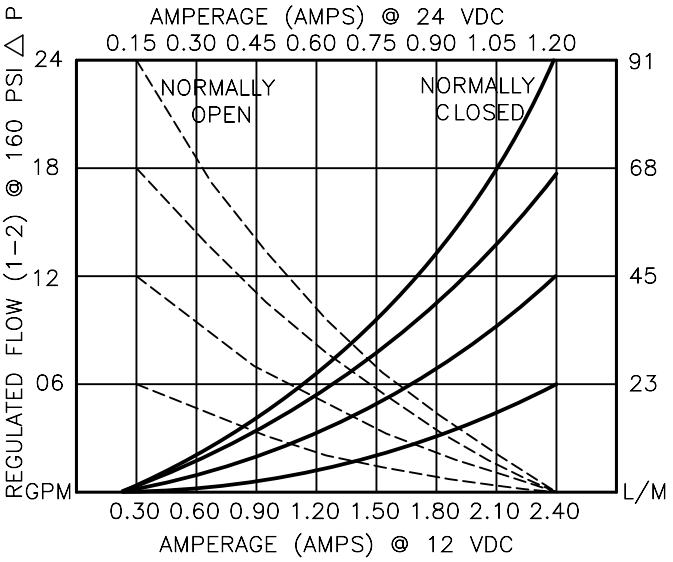

BUCHER hydraulics

WWW.SUMY.IR

PROPORTIONAL, IN–LINE TYPE, FLOW CONTROL VALVE.

DESCRIPTION

This valve is a cartridge style, electro–hydraulic, proportional, in–line (RESTRICTIVE) type, hydraulic non–compensated flow control.
Regulated flow Normally Closed 0 to 24.0 GPM [0 to 91,2 L/M] max.
Normally Open 24.0 to 0 GPM [91,2 to 0 L/m] @ 160 PSI DELTA P.
Flow is proportional to the current input.

OPERATIONS

This unit is a direct acting (NO PILOT FLOW), electro–hydraulic, proportional, non–compensated, flow control valve. When the coil is energized the armature moves the metering orifice to open or to closed position against a precision bias spring varying the flow.
When current is increased or decreased to the coil the flow will increase or decrease proportionally.
IN THE EVENT OF POWER FAILURE THE VALVE WILL CLOSE OR OPEN DEPENDING ON THE VALVE VERSION.

FEATURES AND BENEFITS

Continuous–duty, very low heat rise & waterproof solenoid coil.
Interchangeable solenoid coils & terminations options available.
Hardened precision fitted spool & sleeve provides reliable, long life.
Very efficient wet – armature solenoid core tube construction.
All external carbon steel parts are plated for longer life against the elements.
All cartridge valves are 100% functionally tested.

BUCHER hydraulics

WWW.SUMY.IR

PROPORTIONAL, IN–LINE TYPE, FLOW CONTROL VALVE.

SPECIFICATIONS

OPERATING PRESSURE: 5,000 PSI [350 Bar]
PROOF PRESSURE: 10,000 PSI [700 Bar]
REGULATED FLOW: 25.0 GPM [94,5 l/m] Max. See performance chart.
INTERNAL LEAKAGE: 30 cu.in/min [495 cc/m] @ 160 PSI DELTA P [11 Bar]
VALVE HOUSINGS: 2500 PSI [175 Bar] = Aluminum – Anodized.
5000 PSI [350 Bar] = Steel – Unplated.
OPERATING TEMPERATURE: –40° to +250° F. [–40° to +120° C.]
OPERATING MEDIA: All general purpose hydraulic fluids such as MIL–H–5606, SAE–#10, SAE–#20, etc.
RESPONSE: The most efficient method to control this valve is with current control and a 50 Hz dither.
POWER REQUIREMENTS: 12 VDC, Operating current 0.4 to 2.4 AMPS.
24 VDC, Operating current 0.2 to 1.2 AMPS.
SEAL KIT: SKN–1222 Buna "N"
SKV–1222 Viton
INSTALLATION: Flow 1–2 preferred, Max Flow 2–1 lower than shown on graph. Use undercuts in cavity to obtain max rated flow when using a pressure compensator in series. Pressure drop across valve must not exceed 300 PSI [21] bar.

WEIGHT: 0.84 lbs [0,38 kg] cartridge only.
1.09 lbs [0,50 kg] coil & housing.
1.10 lbs [0,50 kg] aluminum body.
4.20 lbs [1,90 kg] steel body.
VALVE CAVITY: #C1220, See Page 0–013.0.

info.el@bucherhydraulics.com www.bucherhydraulics.com/commoncavity

© 2015 by Bucher Hydraulics, Inc., 2545 Northwest Parkway, Elgin, Illinois 60124, USA
All rights reserved.
The technical information in this catalog, may contain calculated figures (for reference only) and not actual performance data for this product. Data is provided for the purpose of product description only, and must not be construed as warranted characteristics in the legal sense. The information does not relieve users from the duty of conducting their own evaluations and tests. Because the products are subject to continual improvement, we reserve the right to amend the product specifications contained in this catalogue.

BUCHER hydraulics

PROPORTIONAL, NORMALLY CLOSED OR NORMALLY OPEN, IN–LINE, NON–COMPENSATED FLOW CONTROL VALVE.

WWW.SUMY.IR

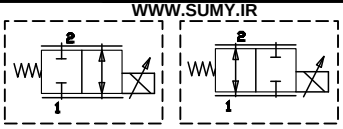

UL approved coil, IP68 and IP69K rated when used with waterproof connector.

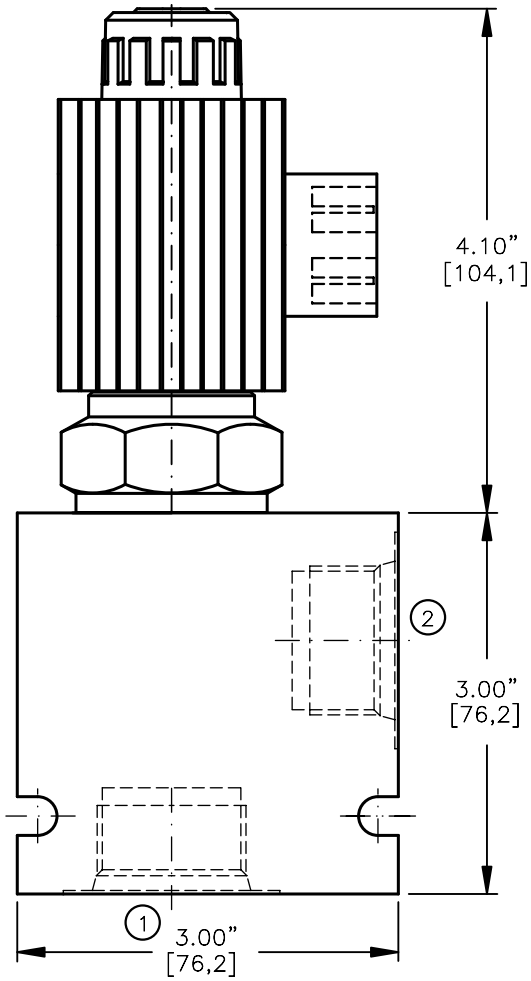

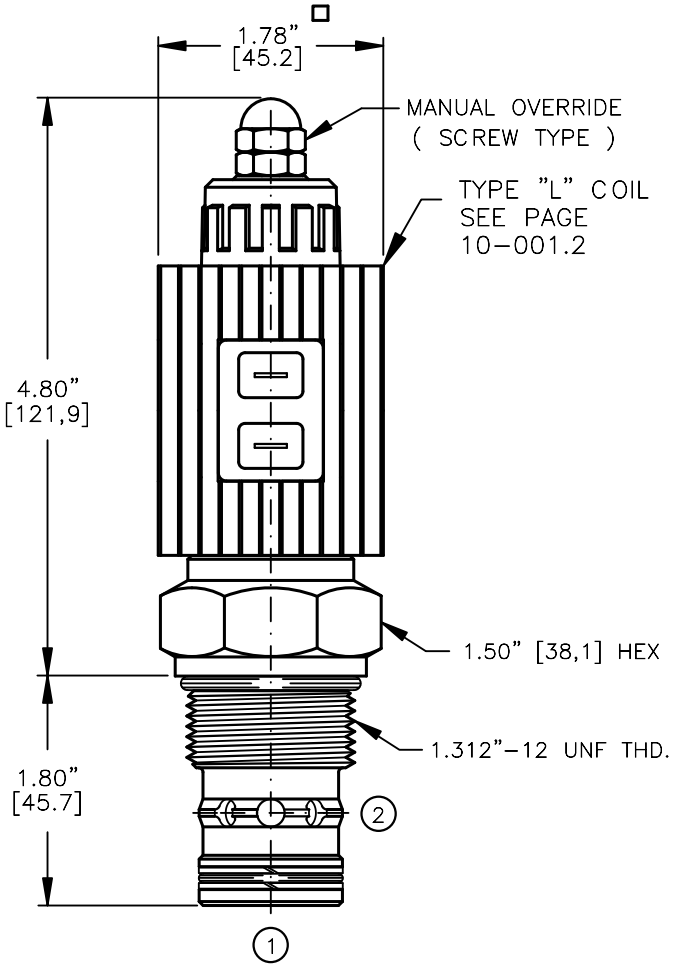

TORQUE:

Steel = 95/100 Ft–Lb. [129/136 Nm]
Aluminum = 70/75 Ft–Lb. [95/102 Nm]

PFCV–16–X–X–XX–X–X–XXX X

BASIC

SIZE
16 = 1.312"–12UNF

SEALS
N = BUNA "N"
V = VITON

STYLE
C = NORMALLY CLOSED
O = NORMALLY OPEN

REGULATED FLOW
06 = 0 TO 6.0 GPM
12 = 0 TO 12.0 GPM
18 = 0 TO 18.0 GPM
24 = 0 TO 24.0 GPM
30 = 0 TO 30.0 GPM

"A" = ALUM. HOUSING
"S" = STEEL HOUSING

PORTS
0 = CARTRIDGE ONLY
06BX = G 3/4" BSPP
08BX = G 1" BSPP
12TX = SAE – #12
16TX = SAE – #16

ADJUSTMENT OPTIONS
0 = NONE
M = MANUAL OVERRIDE

VOLTAGE AMPS
12D = 12 VDC 3.00
24D = 24 VDC 1.50

TERMINALS
L =18GA. 24" LEADS
T =SPADE TERM.
B =BOLT TERM.
G =DIN43650
W =WEATHER–PACK
D =DEUTSCH–DT04–2P
M =METRI–PACK CONN.

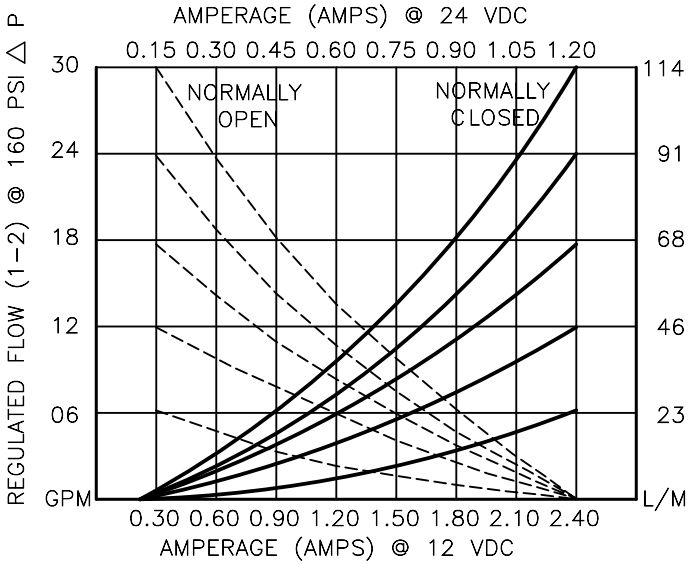

BUCHER hydraulics

WWW.SUMY.IR

PROPORTIONAL, IN–LINE TYPE, FLOW CONTROL VALVE.

DESCRIPTION

This valve is a cartridge style, electro–hydraulic, proportional, in–line (RESTRICTIVE) type, hydraulic non–compensated flow control. Regulated flow Normally Closed 0 to 36.0 GPM [0 to 137,0 L/M] max. Normally Open 36.0 to 0 GPM [137,0 to 0 L/m] @ 160 PSI DELTA P. Flow is proportional to the current input.

OPERATIONS

This unit is a direct acting (NO PILOT FLOW), electro–hydraulic, proportional, non–compensated, flow control valve. When the coil is energized the armature moves the metering orifice to open or to closed position against a precision bias spring varying the flow.
When current is increased or decreased to the coil the flow will increase or decrease proportionally.

IN THE EVENT OF POWER FAILURE THE VALVE WILL CLOSE OR OPEN DEPENDING ON THE VALVE VERSION.

FEATURES AND BENEFITS

Continuous–duty, very low heat rise & waterproof solenoid coil.
Interchangeable solenoid coils & terminations options available.
Hardened precision fitted spool & sleeve provides reliable, long life.
Very efficient wet – armature solenoid core tube construction.
All external carbon steel parts are plated for longer life against the elements.
All cartridge valves are 100% functionally tested.
Industry common cavity.

BUCHER hydraulics

WWW.SUMY.IR

PROPORTIONAL, IN–LINE TYPE, FLOW CONTROL VALVE.

SPECIFICATIONS

OPERATING PRESSURE: 5,000 PSI [350 Bar]
PROOF PRESSURE: 10,000 PSI [700 Bar]
REGULATED FLOW: 36.0 GPM [136,0 l/m] Max. See performance chart.
INTERNAL LEAKAGE: 40 cu.in/min [660 cc/m] @ 160 PSI DELTA P [11 Bar]
VALVE HOUSINGS: 2500 PSI [175 Bar] = Aluminum – Anodized.
5000 PSI [350 Bar] = Steel – Unplated.
OPERATING TEMPERATURE: –40° to +250° F. [–40° to +120° C.]
OPERATING MEDIA: All general purpose hydraulic fluids such as MIL–H–5606, SAE–#10, SAE–#20, etc.
RESPONSE: The most efficient method to control this valve is with current control and a 50 Hz dither.
POWER REQUIREMENTS: 12 VDC, Operating current 0.4 to 2.4 AMPS.
24 VDC, Operating current 0.2 to 1.2 AMPS.
SEAL KIT: SKN–1622 Buna "N"
SKV–1622 Viton
INSTALLATION: Flow 1–2 preferred, Max Flow 2–1 lower than shown on graph. Use undercuts in cavity to obtain max rated flow when using a pressure compensator in series. Pressure drop across valve must not exceed 300 PSI [21] bar.
WEIGHT: 0.95 lbs [0,42 kg] cartridge only.
1.09 lbs [0,50 kg] coil & housing.
1.25 lbs [0,57 kg] aluminum body.
4.65 lbs [2,10 kg] steel body.
VALVE CAVITY: #C1620, See Page 0–014.0.

info.el@bucherhydraulics.com www.bucherhydraulics.com/commoncavity

© 2015 by Bucher Hydraulics, Inc., 2545 Northwest Parkway, Elgin, Illinois 60124, USA
All rights reserved.
The technical information in this catalog, may contain calculated figures (for reference only) and not actual performance data for this product. Data is provided for the purpose of product description only, and must not be construed as warranted characteristics in the legal sense. The information does not relieve users from the duty of conducting their own evaluations and tests. Because the products are subject to continual improvement, we reserve the right to amend the product specifications contained in this catalogue.

Proportional 3/2 Throttle Cartridge, Size 5

Q_{max} = 30 l/min, p_{max} = 250 bar
Sliding-spool design, direct acting
Series MDR32GN…-5…

- De-energized closed 1 → 2
- Compact construction for cavity type AM – 3/4-16 UNF
- Very good reproducibility
- Reliable operation over the whole pressure and flow range (even with high pressure differentials)
- With optional manual flow setting
- All exposed parts with zinc-nickel plating
- High pressure wet-armature solenoids
- The slip-on coil can be rotated, and it can be replaced without opening the hydraulic envelope
- Various plug-connector systems and voltages are available
- Can be fitted in a line-mounting body

1 Description

Series MDR32GN… direct acting proportional 3/2 throttle valves are size 5, high performance screw-in cartridges with a 3/4-16 UNF mounting thread. They are designed on the proven sliding-spool principle. The straightforward design delivers an outstanding price/performance ratio. In the initial position (de-energised), port 1 is closed and ports 2 → 3 are connected with the full flow rating. In control mode, the flow through the connection 1 → 2 is varied in proportionally to the control current. Three types are available: Type "A" - standard model, for general use with or without compensator. Type "Z" - special model, only approved for use with compensator (max. Δp 15 bar). Type "S600" - special model with optimised characteristic - Q = f (I), also only suitable for use with compensator. With this model, the connection 2 → 3 is only used for unloading (see Performance Graphs). These cartridges are particularly suitable for precise and controlled lifting and lowering movements, but they can also be used for reliable operation in mobile and industrial applications featuring large pressure differences. All external parts of the cartridge are zinc-nickel plated according to DIN EN ISO 19 598 and are thus suitable for use in the harshest operating environments. The slip-on coils can be replaced without opening the hydraulic envelope and can be positioned at any angle through 360°. For self-assembly, please refer to the section related data sheets.

2 Symbol

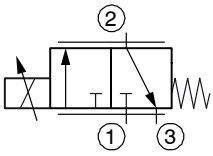

MDR32GNA5…
MDR32GNZ5…

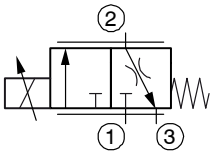

MDR32GNA5…S600

3 Technical data

General characteristics	Description, value, unit
Designation	proportional 3/2 throttle cartridge
Design	sliding-spool design, direct acting
Mounting method	screw-in cartridge 3/4-16 UNF
Tightening torque	40 Nm ± 10 %

WWW.SUMY.IR

General characteristics	Description, value, unit
Size	nominal size 5, cavity type AM
Weight	0.40 kg
Mounting attitude	unrestricted (preferably vertical, coil down)
Ambient temperature range	-25 °C … +50 °C
$MTTF_D$ values	150 years, see data sheet 400-P-010101-en

Hydraulic characteristics	Description, value, unit
Maximum operating pressure	250 bar
Maximum flow rate	30 l/min
Nominal flow rate 1 → 2	25 l/min at Δp = 10 bar
Leakage flow rate	< 150 cm^3/min (with p_N 250 bar) with oil viscosity 33 mm^2/s (cSt)
Flow direction	see symbols
Hydraulic fluid	HL and HLP mineral oil to DIN 51 524; for other fluids, please contact BUCHER
Hydraulic fluid temperature range	-25 °C … +70 °C
Viscosity range	15…380 mm^2/s (cSt), recommended 20...130 mm^2/s (cSt)
Minimum fluid cleanliness Cleanliness class to ISO 4406 : 1999	class 18/16/13

Electrical characteristics	Description, value, unit
Supply voltage	12 V DC, 24 V DC
Control current	12 V = 0…1400 mA, 24 V = 0…760 mA
Power consumption at max. control current	max. 19 W
Coil resistance R - cold value at 20 °C - max. warm value	12 V = 5.8 Ω / 24 V = 21 Ω 12 V = 8.6 Ω / 24 V = 32 Ω
Recommended PWM frequency (dither)	200 Hz
Hysteresis with PWM	2…4 % I_N
Reversal error with PWM	2…4 % I_N
Sensitivity with PWM	< 1 % I_N
Reproducibility with PWM	< 2 % p_N
Relative duty cycle	100 %
Protection class to ISO 20 653 / EN 60 529	IP 65 / IP 67 / IP 69K, see “Ordering code” (with appropriate mating connector and proper fitting and sealing)
Electrical connection	DIN EN 175301-803, 3-pin 2 P+E (standard) for other connectors, see “Ordering code”

4 Performance graphs measured with oil viscosity 33 mm²/s (cSt)

For general use with / without compensator – type “A”

Δp = f (Q) Pressure drop - Flow rate characteristic

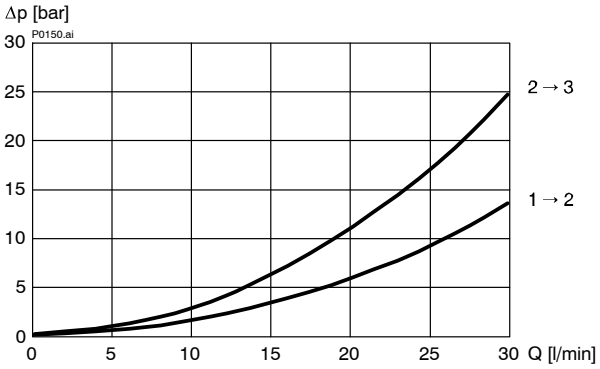

Q = f (I; Δp) Flow rate adjustment characteristic

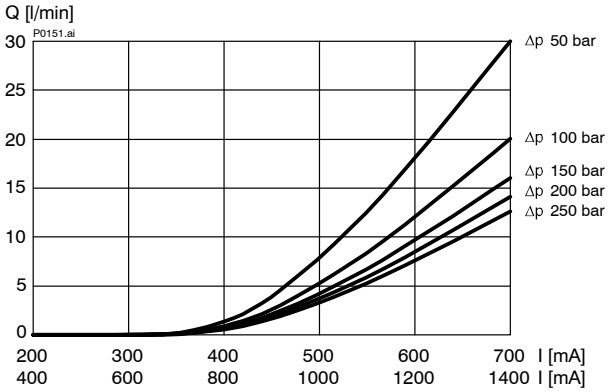

For use with compensator (max. Δp = 15 bar) – type “Z”

Δp = f (Q) Pressure drop - Flow rate characteristic

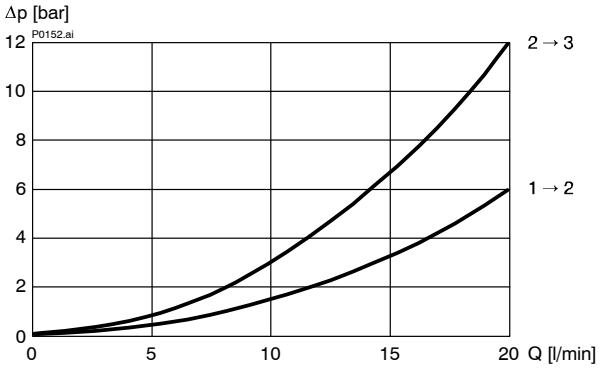

Q = f (I; Δp) Flow rate adjustment characteristic

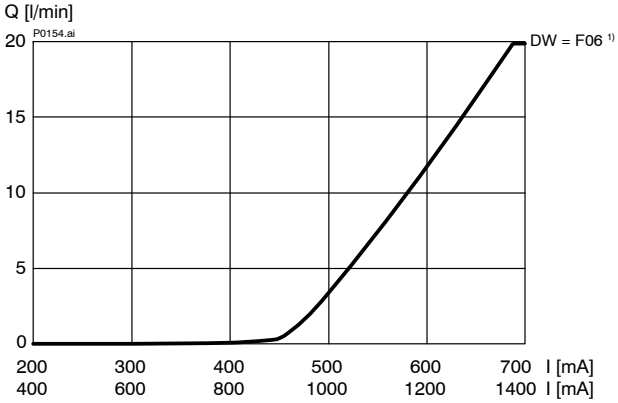

Q = f (Δp; I) Flow rate adjustment characteristic

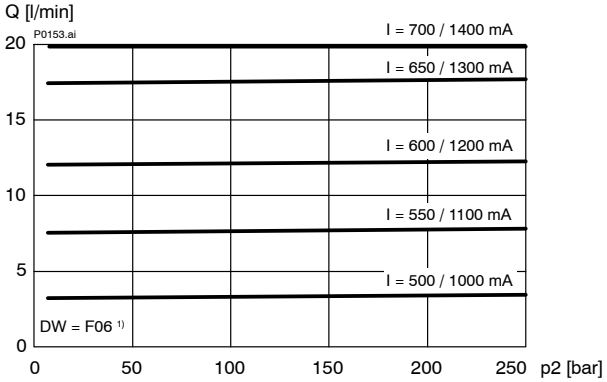

IMPORTANT!

1) Performance graphs measured with compensator model DWDPA-5D-10-F06-2

With optimised characteristic - Q = f (I), type “S600” – with compensator (max. Δp = 15 bar)

Δp = f (Q) Pressure drop - Flow rate characteristic

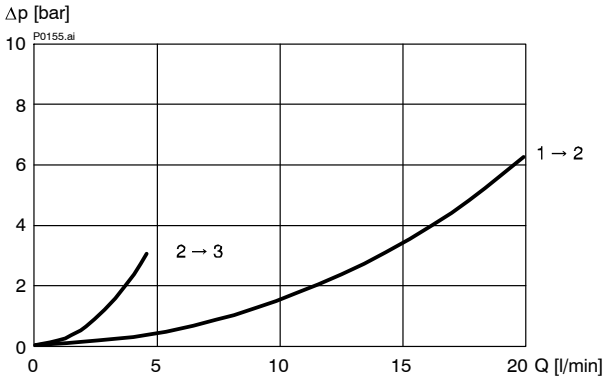

Q = f (I; Δp) Flow rate adjustment characteristic

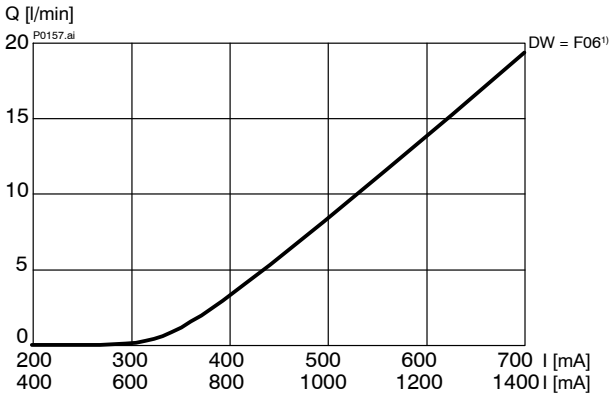

Q = f (Δp; I) Flow rate adjustment characteristic

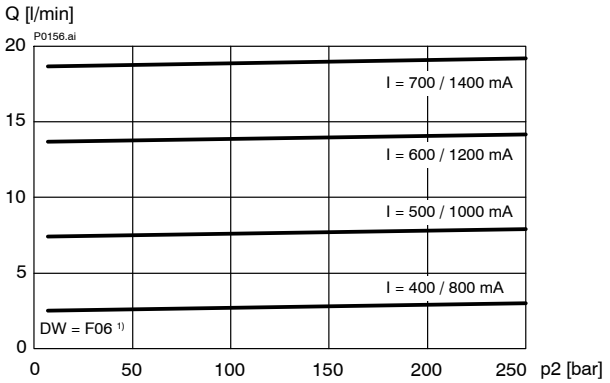

IMPORTANT!

1) Performance graphs measured with compensator model DWDPA-5D-10-F06-2

5 Installation information

IMPORTANT!

To achieve the maximum performance rating, fit the solenoid coil as shown (with the plug pins at the bottom) and install the valve in a steel body. When fitting the cartridges, note the mounting attitude (preferably vertical, with coil down → automatic air bleed) and use the specified tightening torque. No adjustments are necessary, since the cartridges are set in the factory.

ATTENTION!

Only qualified personnel with mechanical skills may carry out any maintenance work. Generally, the only work that should ever be undertaken is to check, and possibly replace, the seals. When changing seals, oil or grease the new seals thoroughly before fitting them.

6 Dimensions & sectional view

Without manual flow setting – standard

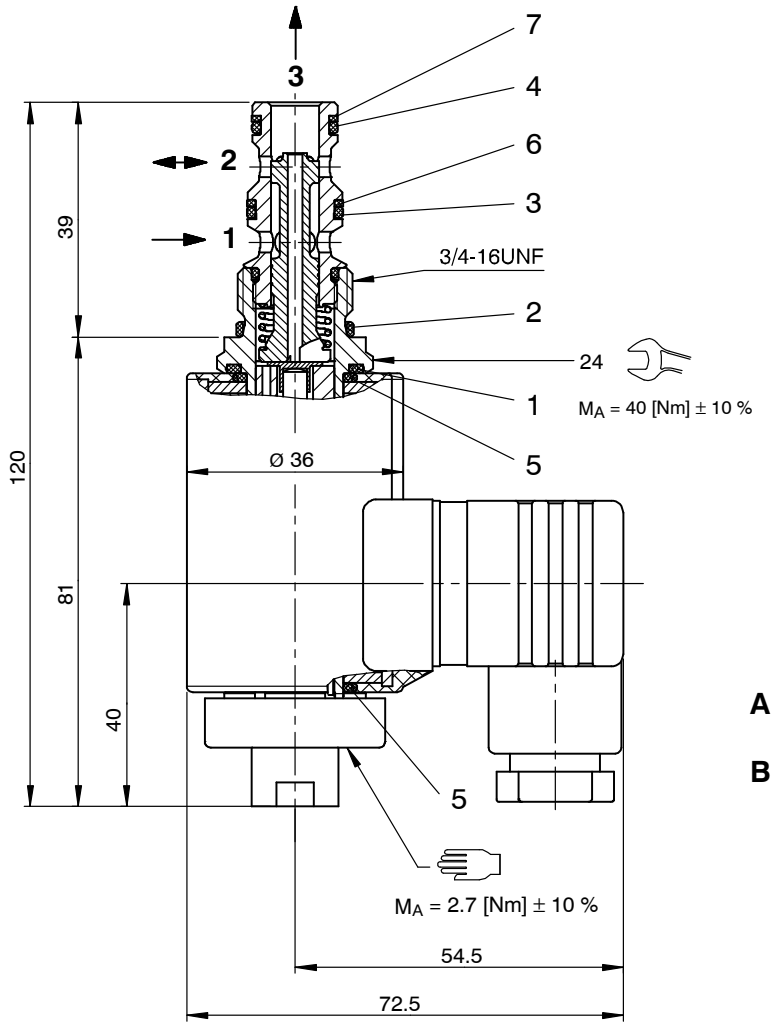

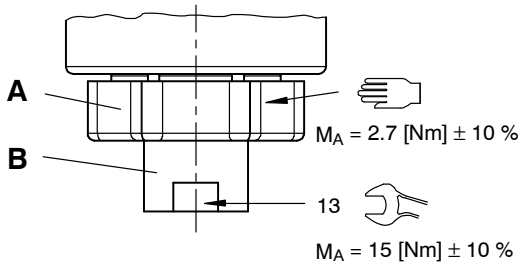

Seal kit NBR no. DS-247-N [2)]

Item	Qty.	Description			
1	1	O-ring		∅ 18,00 x 2,00	FKM
2	1	O-ring	no. 017	∅ 17,17 x 1,78	N90
3	1	O-ring	no. 014	∅ 12,42 x 1,78	N90
4	1	O-ring	no. 013	∅ 10,82 x 1,78	N90
5	2	O-ring		∅ 16,00 x 2,00	FKM
6	2	Backup ring		∅ 10.70 x 1.45 x 1.40	FI0751
7	2	Backup ring		∅ 09.40 x 1.45 x 1.00	FI0751

IMPORTANT!

2) Seal kit with FKM (Viton) seals no. DS-247-V

Air-bleeding

If necessary, air can be purged from these proportional throttle cartridges by using the cap nut (Item B). The procedure is as follows:

A Knurled nut

B Cap nut

Steps:

1. Slacken and remove the knurled nut.
2. Slacken the cap nut approx. 1.5 turns.

   Caution:
   Slackening the cap nut allows oil to spray out!
3. Switch the proportional throttle cartridge ON/OFF several times until no more air bubbles escape.
4. Tighten the cap nut.
5. Refit the knurled nut and tighten it.

With manual flow setting – Option “E”

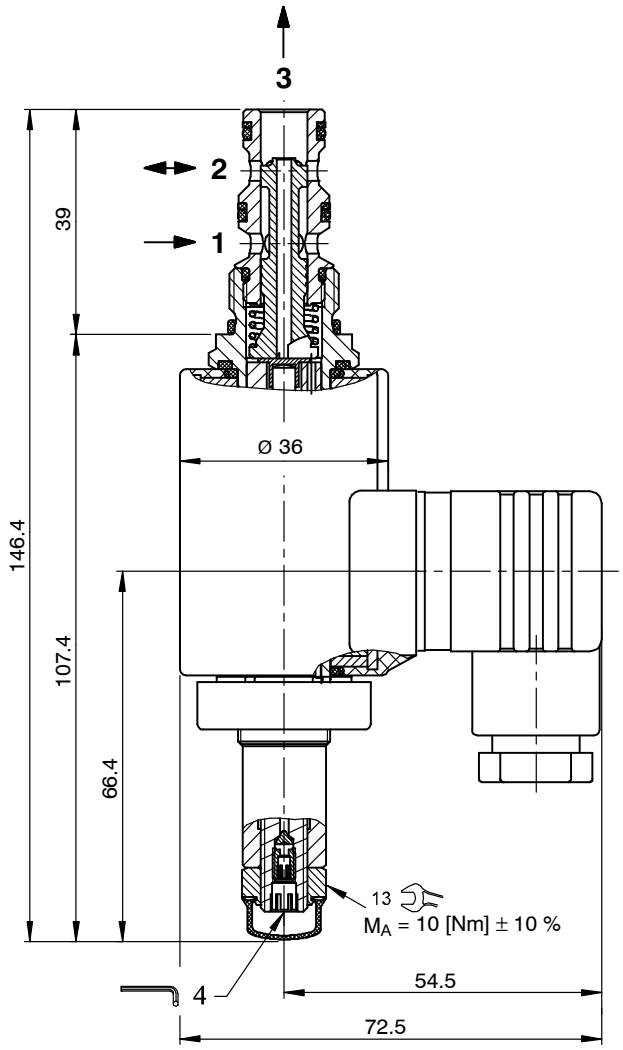

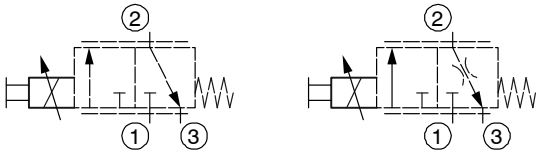

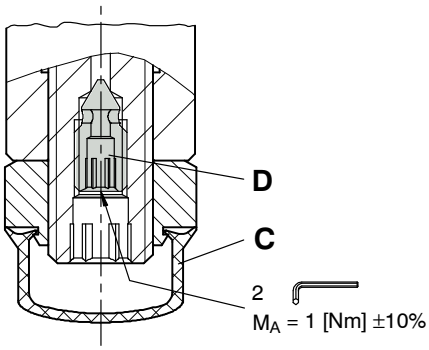

Integral air-bleeding

If necessary, air can be purged from these proportional throttle cartridges by using the integral air-bleed screw (Item D). The procedure is as follows:

C Protective cap

D Air-bleed screw

Steps:

1. Remove the protective cap.
2. Slacken the air-bleed screw approx. 2 turns.
3. Switch the proportional throttle cartridge ON/OFF several times until no more air bubbles escape.
4. Tighten the air-bleed screw.
5. Fit the protective cap.

7 Manual flow setting

Optionally, the proportional throttle cartridges can be supplied with an integral manual flow setting. If a proportional solenoid is faulty, for example, this manual flow setting enables the required flow rate to be set mechanically. **This manual flow setting is not designed for adjusting the flow in a dynamic control mode.**

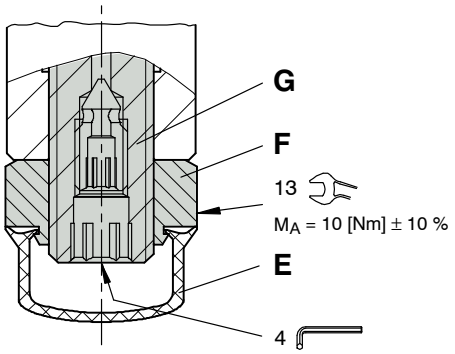

E Protective cap

F Lock nut (13 A/F)

G Adjusting spindle for volume setting

Setting the flow rate manually

Steps:

1. Remove the protective cap.
2. Slacken the lock nut (13 A/F).
3. Screw in (turn to right) the adjusting spindle (4 A/F) until the required flow rate is set.
4. Tighten the lock nut (13 A/F).
5. Fit the protective cap.

Restoring the factory settings

Steps:

1. Solenoid de-energised.
2. Remove the protective cap.
3. Slacken the lock nut (13 A/F).
4. Unscrew the adjusting spindle (4 A/F) to its end-stop, then screw it in 2 turns.
5. Tighten the lock nut (13 A/F).
6. Fit the protective cap.

8 Application examples

Standard type “A”

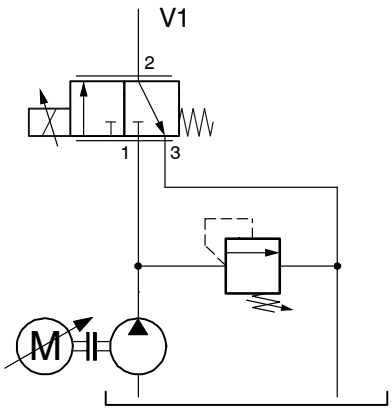

- Can be used **without compensator** (full Δp permissible)
- Full-flow connection 2 → 3
- Control is only available with connection 1 → 2

Special type “Z” – only to be used with compensator

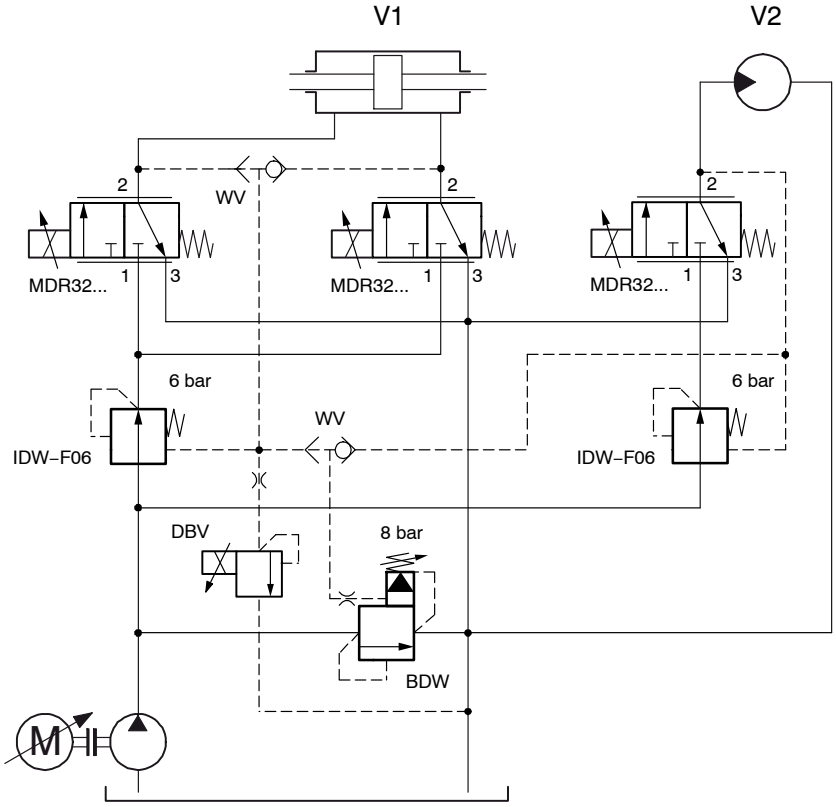

- Only for use **with compensator** (max. Δp = 15 bar)
- Full-flow connection 2 → 3
- Control is only available with connection 1 → 2

Special type “S600” – only to be used with compensator

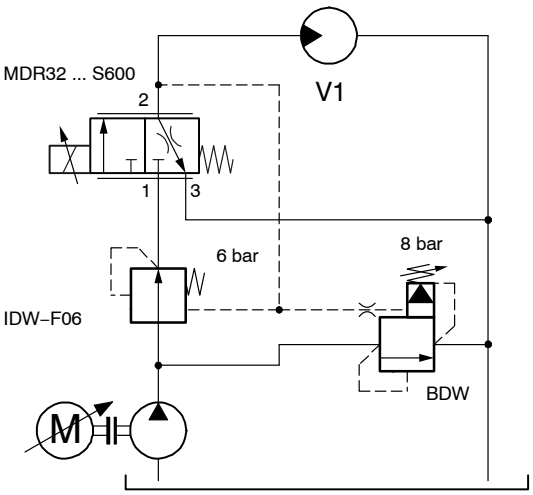

- Only for use **with compensator** (max. Δp = 15 bar)
- Connection 2 → 3 is not full flow (suitable for unloading)
- Control is only available with connection 1 → 2

9 Ordering code

Ex. M D R 32G N A 5 _ - _ - 1 24 D _ _

M	=	flow-control valve
D	=	direct acting
R	=	proportional-solenoid operated
32G	=	3/2 function, de-energised closed
N	=	electrically operated, V DC = 27 W
A ... Q	=	can be used with or without compensator (**standard**)
Z	=	type only for use with compensator
Y ... R	=	special features - please consult BUCHER
5	=	nominal size 5
(blank)	=	NBR (Nitrile) seals (**standard**)
V	=	FKM (Viton) seals (special seals - please contact BUCHER)
(blank)	=	no manual flow setting (**standard**)
E	=	with manual flow setting
1 ... 9	=	design stage (omit when ordering new units)
...	=	voltage e.g. **24** (24 V)
D	=	current DC
(blank)	=	DIN EN 175301-803 connection with mating plug (**standard, IP 65**)
M100	=	DIN EN 175301-803 connection without mating plug
C	=	Kostal plug connection (IP 65)
JT	=	Junior Timer radial plug connection (with protection diode, IP65)
IT	=	Junior Timer axial plug connection (with protection diode, IP65)
D	=	Deutsch plug connection 45° DT04-2P (IP67/69K)
DT	=	Deutsch plug connection 45° DT04-2P (with protection diode, IP67/69K)
S	=	AMP Superseal 1.5 (IP67) / Metri-Pack 150 (IP65) plug connection
F	=	flying leads (500 mm)
		mating plug not supplied
Ohne	=	types (“A” or “Z”)
S600	=	type with optimised characteristic - Q = f (I), only for use with compensator

10 Related data sheets

Reference	(Old no.)	Description
400-P-040011	(i-32)	The form-tool hire programme
400-P-040181	(i-33.11)	Cavity type AM
400-P-120110	(W-2.141)	Coils for screw-in cartridge valves
400-P-510101		Amplifier unit for proportional valves (1-channel) PBS - 3A
400-P-720111	(G-4.20)	Line-mounting body, type GAMA (G 3/8”)
400-P-010101		$MTTF_D$ values for hydraulic valves

info.ch@bucherhydraulics.com www.bucherhydraulics.com

© 2021 by Bucher Hydraulics AG Frutigen, CH-3714 Frutigen
All rights reserved.
Data is provided for the purpose of product description only, and must not be construed as warranted characteristics in the legal sense. The information does not relieve users from the duty of conducting their own evaluations and tests. Because the products are subject to continual improvement, we reserve the right to amend the product specifications contained in this catalogue.

Classification: 430.310.325.305.310.310

Proportional 3/2 Throttle Cartridge, Size 5

Q_{max} = 40 l/min (10 gpm), p_{max} = 250 bar (3600 psi)
Sliding-spool design, direct acting
Series MDT32…-5M…B…

- De-energized closed 1 to 2
- Compact construction for cavity type AM – 3/4-16 UNF
- Operated by a proportional solenoid
- Optional with two emergency manual flow settings
- Reliable operation over the whole pressure and flow range (even with high pressure differentials)
- All exposed parts with zinc-nickel plating
- High pressure wet-armature solenoids
- The slip-on coil can be rotated, and it can be replaced without opening the hydraulic envelope
- Various plug-connector systems and voltages are available
- Can be fitted in a line-mounting body

1 Description

Series MDT32…-5M…B… direct acting proportional 3/2 throttle valves are size 5, high performance screw-in cartridges with a 3/4-16 UNF mounting thread. They are designed on the proven sliding-spool principle. The straightforward design delivers an outstanding price/performance ratio. In design “S”, in the initial position (de-energized), port 1 is closed and ports 2 to 3 are connected with the full flow rating. In control mode, the flow through the connection 1 to 2 can be regulated proportionally to the control current, but not the closing of connection 2 to 3. Design “T”, in the initial position (de-energized) is also closed at port 1, and ports 2 to 3 are connected, but are only used for unloading (see performance graphs). These cartridges are particularly suitable for precise and controlled lifting and lowering movements, but they can also be used for reliable operation in mobile and industrial applications featuring large pressure differences. Optionally, the valves are available with a push-button emergency operation or an emergency manual flow setting via tool wrench. All external parts of the cartridge are zinc-nickel plated according to DIN EN ISO 19 598 and are thus suitable for use in the harshest operating environments. The slip-on coils can be replaced without opening the hydraulic envelope and can be positioned at any angle through 360°. For self-assembly, please refer to the section related data sheets.

2 Symbol

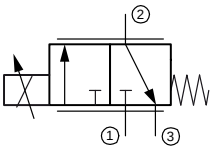

MDT32GS…-5…

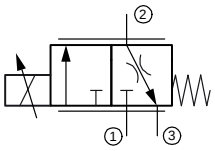

MDT32GT…-5…

3 Technical data

General characteristics	Description, value, unit
Designation	proportional 3/2 throttle cartridge
Design	sliding-spool design, direct acting
Mounting method	screw-in cartridge 3/4-16 UNF
Tightening torque	40 Nm ± 10 % (30 ft-lbs ± 10 %)

General characteristics	Description, value, unit
Size	nominal size 5, cavity type AM
Weight	0.40 kg (0.9 lbs)
Mounting attitude	unrestricted (preferably vertical, coil down)
Ambient temperature range	-30 °C … +60 °C (-22 °F … +140 °F)
$MTTF_D$ values	150 years, see data sheet 400-P-010101-en

Hydraulic characteristics	Description, value, unit
Maximum operating pressure	250 bar (3600 psi)
Maximum flow rate Q_N= 28 l/min Q_N= 24 l/min Q_N= 10 l/min	40 l/min (10 gpm) 30 l/min (7.5 gpm) 22 l/min (5.5 gpm)
Nominal flow rate Q_N 1 → 2	28 l/min (7 gpm) at Δp = 10 bar (140 psi) 24 l/min (6 gpm) at Δp = 10 bar (140 psi) 10 l/min (2.5 gpm) at Δp = 10 bar (140 psi)
Volume flow rate 2 → 3	see symbols not proportionally controllable
Leakage flow rate	< 250 cm^3/min (with p_N 250 bar) with oil viscosity 33 mm^2/s (cSt)
Flow direction	see performance graphs control possible only for connection 1 to 2
Hydraulic fluid	HL and HLP mineral oil to DIN 51 524; for other fluids, please contact BUCHER
Hydraulic fluid temperature range	-30 °C … +70 °C (-22 °F … +158 °F)
Viscosity range	15…380 mm^2/s (cSt), recommended 20...130 mm^2/s (cSt)
Minimum fluid cleanliness Cleanliness class to ISO 4406 : 1999	class 18/16/13

Electrical characteristics	Description, value, unit
Supply voltage	12 V DC, 24 V DC
Control current	12 V = 0…1600 mA, 24 V = 0…800 mA
Power consumption at max. control current	max. 17.5 W
Coil resistance R - cold value at 20 °C - max. warm value	12 V = 4.35 Ω / 24 V = 17.2 Ω 12 V = 6.8 Ω / 24 V = 26.9 Ω
Recommended PWM frequency (dither)	150 Hz
Hysteresis with PWM	2…5 % I_N
Reversal error with PWM	2…5 % I_N
Sensitivity with PWM	< 2 % I_N
Reproducibility with PWM	< 3 % p_N
Relative duty cycle	100 %
Protection class to ISO 20 653 / EN 60 529	IP 65 / IP 67 / IP 69K, see “Ordering code” (with appropriate mating connector and proper fitting and sealing)
Electrical connection	DIN EN 175301-803, 3-pin 2 P+E (standard) for other connectors, see “Ordering code”

4 Performance graphs measured with oil viscosity 33 mm²/s (cSt)

Δp = f (Q) Pressure drop - Flow rate characteristic [MDT32GT…-28]

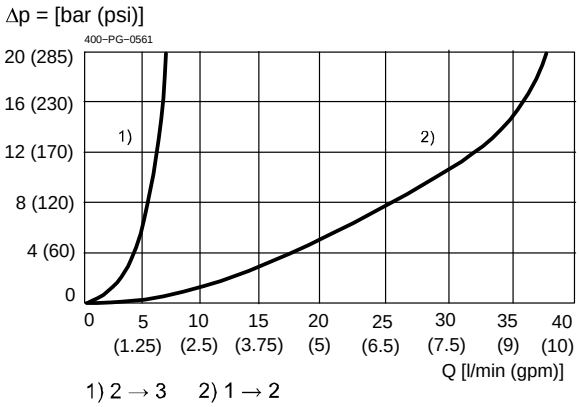

1) 2 → 3 2) 1 → 2

Q = f (I; Δp) Flow rate adjustment characteristic [MDT32GT…-28] – 1 → 2 with compensator 3)

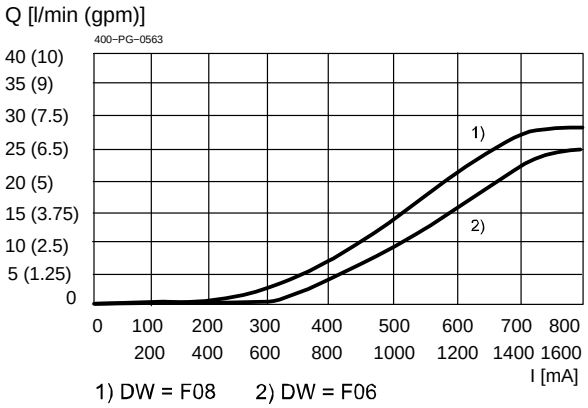

1) DW = F08 2) DW = F06

IMPORTANT!

3) with compensator DWDPB-5D-10-F0_-1

Q = f (I; Δp) Flow rate adjustment characteristic [MDT32GT…-28] – 1 → 2 with constant pressure drop

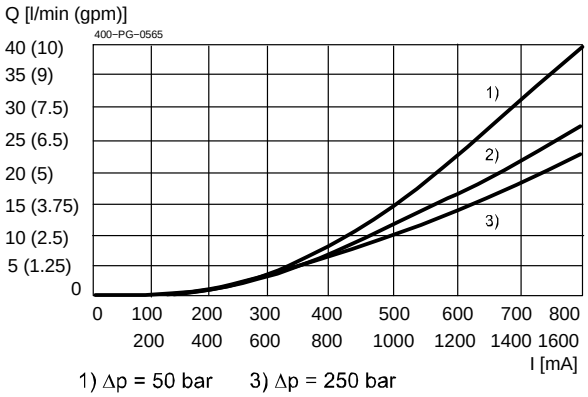

1) Δp = 50 bar 3) Δp = 250 bar
2) Δp = 150 bar

Q = f (I; Δp) Flow rate adjustment characteristic [MDT32GT…-28]

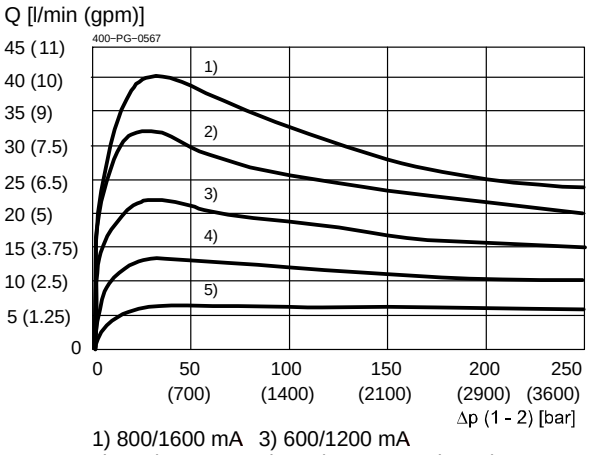

1) 800/1600 mA 3) 600/1200 mA
2) 700/1400 mA 4) 500/1000 mA 5) 400/800 mA

Q = f (I; Δp) Flow rate adjustment characteristic [MDT32GT…-28] – 1 → 2 with compensator 5)

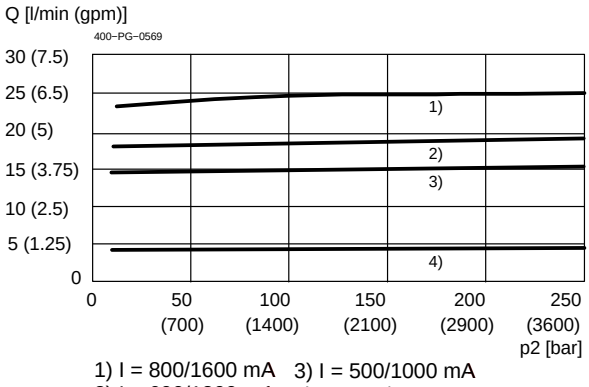

1) I = 800/1600 mA 3) I = 500/1000 mA
2) I = 600/1200 mA 4) I = 400/800 mA

IMPORTANT!

5) with compensator DWDPB-5D-10-F06

Δp = f (Q) Pressure drop - Flow rate characteristic [MDT32GS…-24]

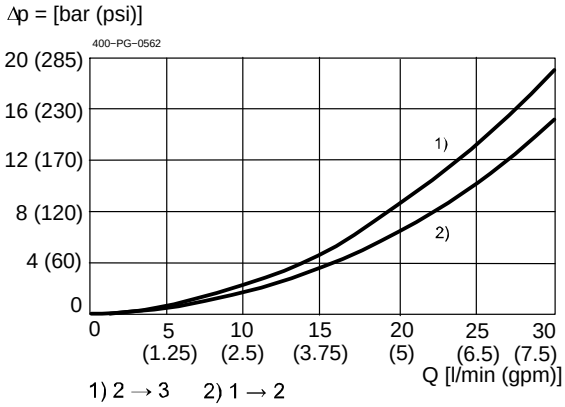

1) 2 → 3 2) 1 → 2

Q = f (I; Δp) Flow rate adjustment characteristic [MDT32GS…-24] – 1 → 2 with compensator [3)]

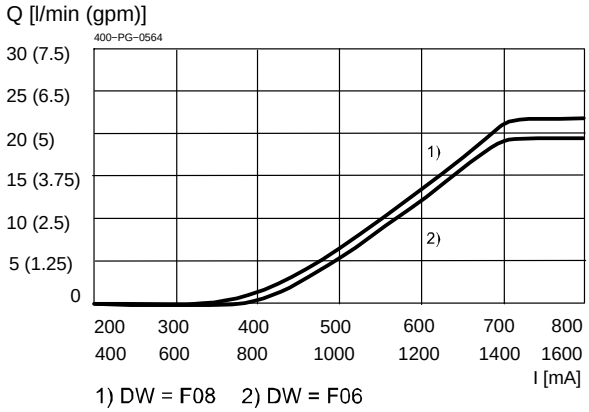

1) DW = F08 2) DW = F06

IMPORTANT!

3) with compensator DWDPB-5D-10-F0_-1

Q = f (I; Δp) Flow rate adjustment characteristic [MDT32GS…-24] – 1 → 2 with constant pressure drop

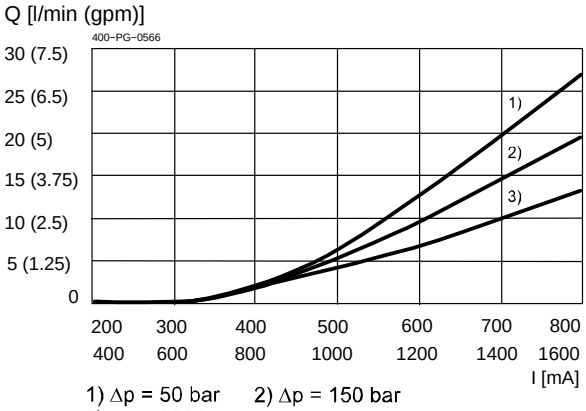

1) Δp = 50 bar 2) Δp = 150 bar
3) Δp = 250 bar

Q = f (I; Δp) Flow rate adjustment characteristic [MDT32GS…-24]

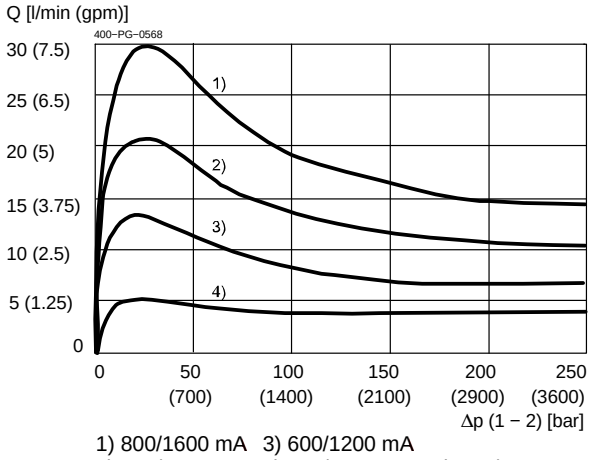

1) 800/1600 mA 3) 600/1200 mA
2) 700/1400 mA 4) 500/1000 mA 4) 500/1000 mA

Q = f (I; Δp) Flow rate adjustment characteristic [MDT32GS…-24] – 1 → 2 with compensator [4)]

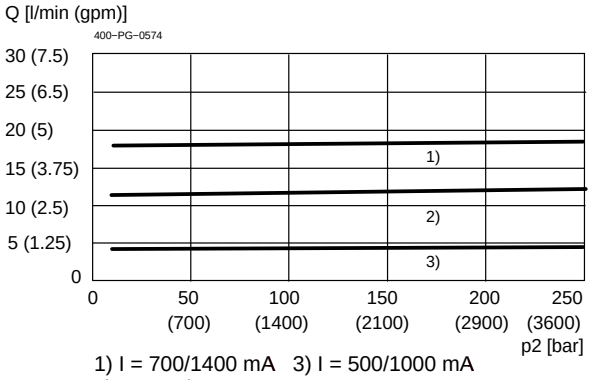

1) I = 700/1400 mA 3) I = 500/1000 mA
2) I = 600/1200 mA

IMPORTANT!

4) with compensator DWDPB-5D-10-F06

Δp = f (Q) Pressure drop - Flow rate characteristic [MDT32GS…-10]

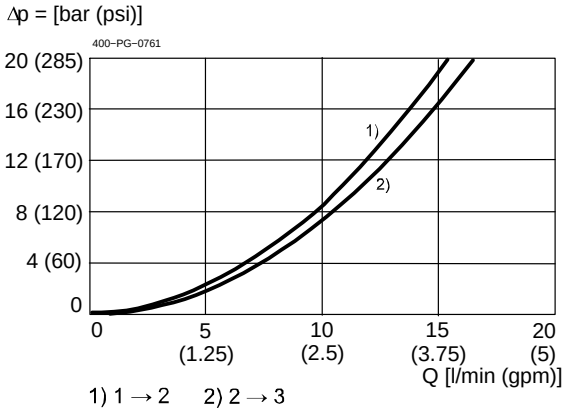

1) 1 → 2 2) 2 → 3

Q = f (I; Δp) Flow rate adjustment characteristic [MDT32GS…-10] – 1 → 2 with compensator [3]

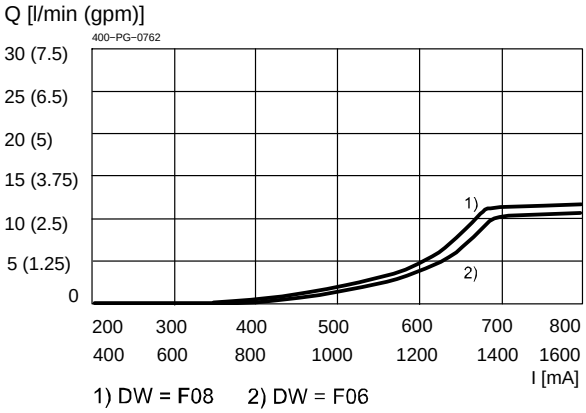

1) DW = F08 2) DW = F06

IMPORTANT!

[3] with compensator DWDPB-5D-10-F0_-1

Q = f (I; Δp) Flow rate adjustment characteristic [MDT32GS…-10] – 1 → 2 with constant pressure drop

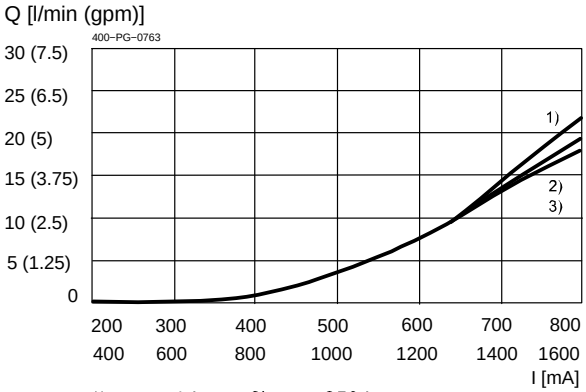

1) Δp = 50 bar 3) Δp = 250 bar
2) Δp = 150 bar

Q = f (I; Δp) Flow rate adjustment characteristic [MDT32GS…-10]

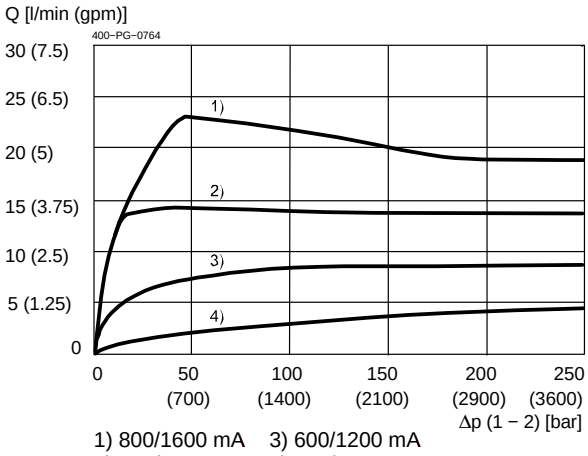

1) 800/1600 mA 3) 600/1200 mA
2) 700/1400 mA 4) 500/1000 mA

Q = f (I; Δp) Flow rate adjustment characteristic [MDT32GS…-10] – 1 → 2 with compensator [4]

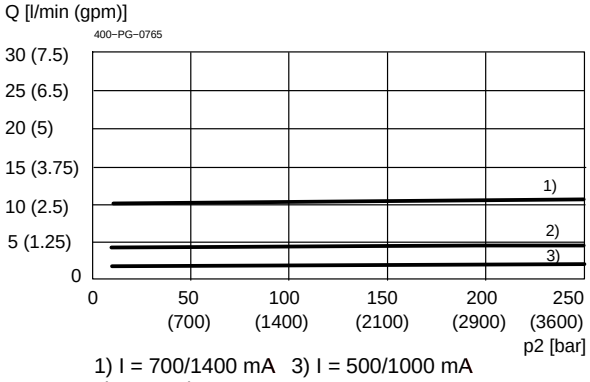

1) I = 700/1400 mA 3) I = 500/1000 mA
2) I = 600/1200 mA

IMPORTANT!

[4] with compensator DWDPB-5D-10-F06

5 Installation information

IMPORTANT!
To achieve the maximum performance rating, fit the solenoid coil as shown (with the plug pins at the bottom) and install the valve in a steel body. When fitting the cartridges, note the mounting attitude (preferably vertical, with coil down → automatic air bleed) and use the specified tightening torque. No adjustments are necessary, since the cartridges are set in the factory.

ATTENTION!
Only qualified personnel with mechanical skills may carry out any maintenance work. Generally, the only work that should ever be undertaken is to check, and possibly replace, the seals. When changing seals, oil or grease the new seals thoroughly before fitting them.

6 Dimensions & sectional view

6.1 Standard without emergency operation options "O" and "S"

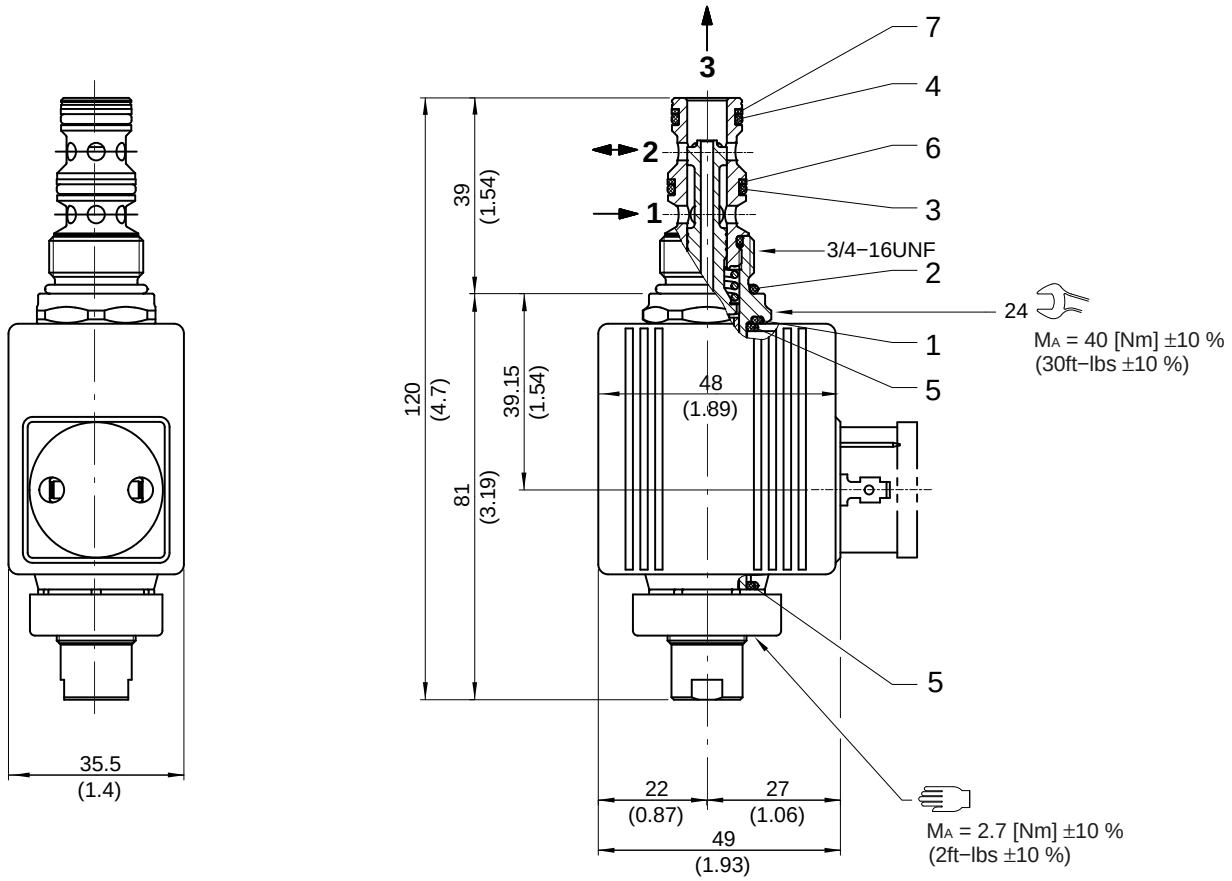

6.2 Option with emergency override pin "P" and option with emergency override "S"

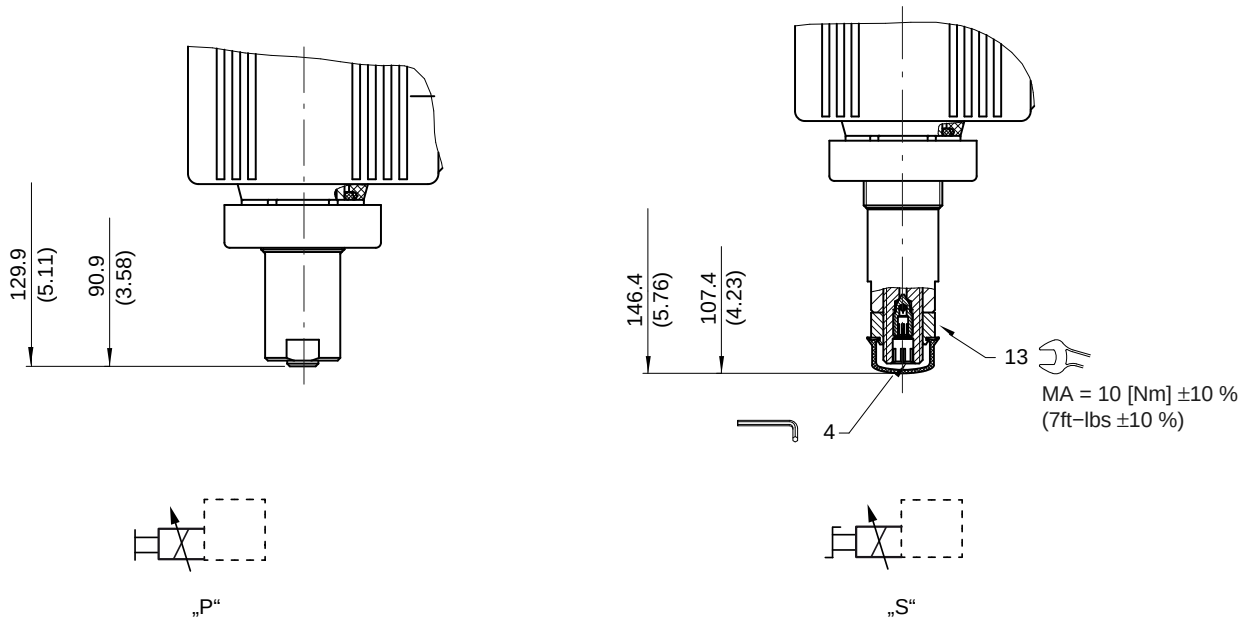

Seal kit NBR no. DS-247-N [3)]

Item	Qty.	Description			
1	1	O-ring		∅ 18,00 x 2,00	FKM
2	1	O-ring	no. 017	∅ 17,17 x 1,78	N90
3	1	O-ring	no. 014	∅ 12,42 x 1,78	N90
4	1	O-ring	no. 013	∅ 10,82 x 1,78	N90
5	2	O-ring		∅ 16,00 x 2,00	FKM
6	1	Backup ring		∅ 10.70 x 1.45 x 1.40	FI0751
7	1	Backup ring		∅ 09.40 x 1.45 x 1.00	FI0751

IMPORTANT!

3) Seal kit with FKM (Viton) seals no. DS-247-V

Air-bleeding for option "O" and "P"

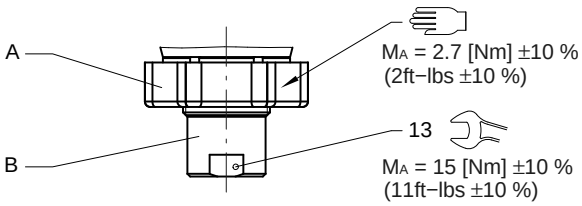

Air-bleeding

If necessary, air can be purged from these proportional throttle cartridges by using the cap nut (Item B). The procedure is as follows:

A Knurled nut

B Cap nut

Steps:

1. Reduce pressure in port 3.
2. Slacken and remove the knurled nut.
3. Slacken the cap nut approx. 1.5 turns.

   Caution:
   Slackening the cap nut allows oil to spray out!
4. Switch the proportional throttle cartridge ON/OFF several times until no more air bubbles escape.
5. Tighten the cap nut.
6. Refit the knurled nut and tighten it.

Air-bleeding for option "S"

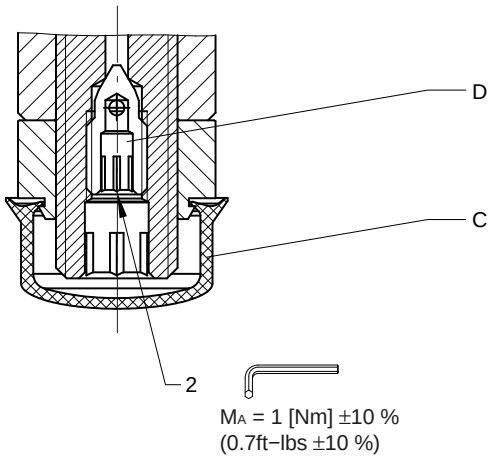

Integral air-bleeding

If necessary, air can be purged from these proportional throttle cartridges by using the integral air-bleed screw (Item D). The procedure is as follows:

C Protective cap

D Air-bleed screw

Steps:

1. Reduce pressure in port 3.
2. Remove the protective cap.
3. Slacken the air-bleed screw approx. 2 turns.
4. Switch the proportional throttle cartridge ON/OFF several times until no more air bubbles escape.
5. Tighten the air-bleed screw.
6. Fit the protective cap.

7 Emergency manual flow setting

Optionally, the proportional throttle cartridges can be supplied with an integral manual flow setting. If a proportional solenoid is faulty, for example, this manual flow setting enables the required flow rate to be set mechanically. **This manual flow setting is not designed for adjusting the flow in a dynamic control mode.**

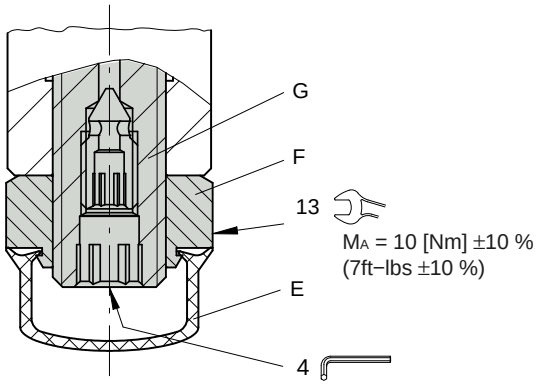

E Protective cap

F Lock nut (13 A/F)

G Adjusting spindle for volume setting

Setting the flow rate manually

Steps:

1. Remove the protective cap.
2. Slacken the lock nut (13 A/F).
3. Screw in (turn to right) the adjusting spindle (4 A/F) until the required flow rate is set.
4. Tighten the lock nut (13 A/F).
5. Fit the protective cap.

Restoring the factory settings

Steps:

1. Solenoid de-energised.
2. Remove the protective cap.
3. Slacken the lock nut (13 A/F).
4. Unscrew the adjusting spindle (4 A/F) to its end-stop, then screw it in 2 turns.
5. Tighten the lock nut (13 A/F).
6. Fit the protective cap.

8 Application examples

Symmetric option MDT32GS…-5

Use without compensator:

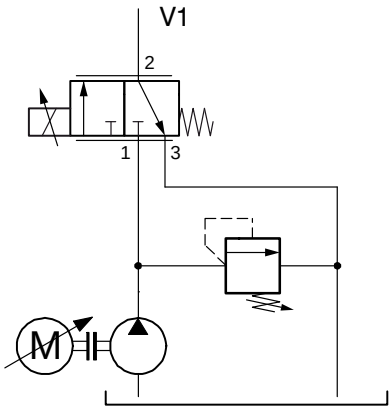

- Full-flow connection 2 → 3
- Control is only available with connection 1 → 2

WWW.SUMY.IR

Symmetric option MDT32GS…-5

Use with compensator:

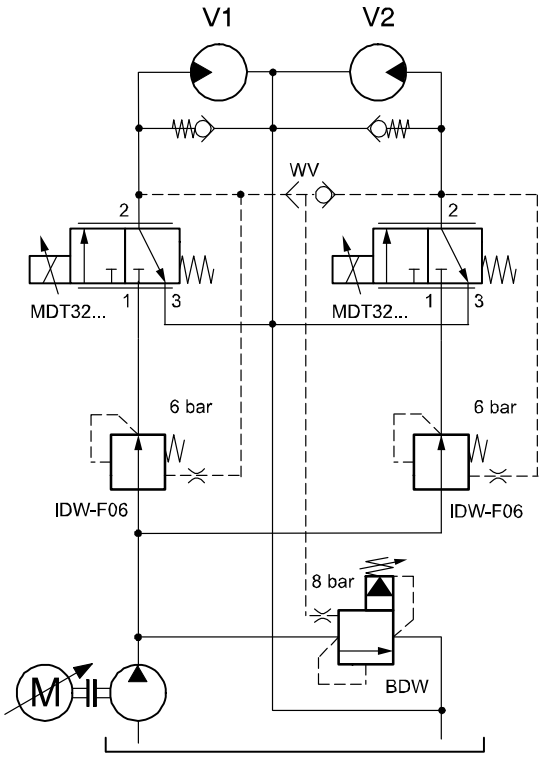

- Full-flow connection 2 → 3
- Control is only available with connection 1 → 2

Throttled option MDT32GT…-5

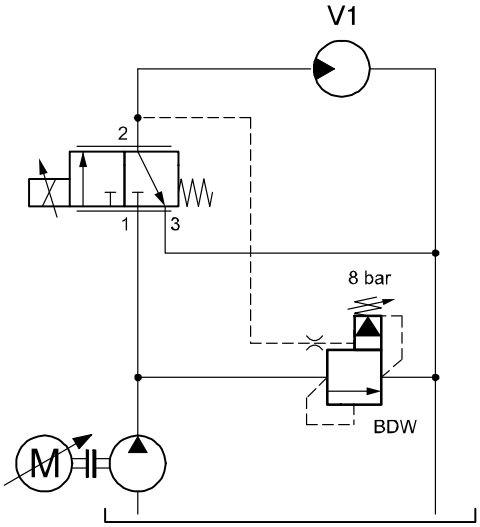

- Connection 2 → 3 is not full-flow (suitable for unloading)
- Control is only available with connection 1 → 2

9 Ordering code

Ex. M D T 32 G S - 5 M - 28 - O - N B 1 - 24 D G _

M = flow-control valve
D = direct acting
T = COIL 36X48, 30 W (proportional)
32 = 3-way/2-position
G = spool de-energized closed
S = symmetrical opening cross-section
T = 2 to 3 trottled
5 = nominal size 5
M = cavity type AM
28 = Q_N 28 l/min, Δp 10 bar (only model «T», 2 to 3 throttled)
24 = Q_N 24 l/min, Δp 10 bar (only model «S», sym. opening cross-section)
10 = Q_N 10 l/min, Δp 10 bar (only model «S», sym. opening cross-section)
O = without manual override
P = with manual override (pin)
S = with manual override (screwable)
N = NBR (nitril-butadien-rubber / BUNA) seals **(standard)**
V = FKM (fluorocarbon rubber / VITON) seals (special seals on request)
B … Q = standard model
Z … R = special model (on request)
1 … 9 = technical design no. (omit by ordering)
… = voltage e.g. 24 (24 V)
D = current DC
G = **standard -** plug connection according to DIN EN (3-pin 2 P+E, IP65)
J = Junior Timer radial plug connection (IP65)
JR = Junior-Timer radial plug connection (with protection diode, IP65)
U = Deutsch radial plug connection DT04-2P (IP67/69K)
UR = Deutsch radial plug connection DT04-2P (with protection diode, IP 67/69K)
(blank) = without mating plug
Q = with mating plug (only by connection type “G” possible)

10 Related data sheets

Reference	(Old no.)	Description
400-P-040011	(i-32)	The form-tool hire programme
400-P-040181	(i-33.11)	Cavity type AM
400-P-120212	(W-2.141)	Coils for screw-in cartridge valves
400-P-720111	(G-4.20)	Line-mounting body, type GAMA (G 3/8”)
400-P-010101		$MTTF_D$ values for hydraulic valves

info.ch@bucherhydraulics.com www.bucherhydraulics.com

© 2024 by Bucher Hydraulics AG Frutigen, CH-3714 Frutigen
All rights reserved.
Data is provided for the purpose of product description only, and must not be construed as warranted characteristics in the legal sense. The information does not relieve users from the duty of conducting their own evaluations and tests. Because the products are subject to continual improvement, we reserve the right to amend the product specifications contained in this catalogue.

Classification: 430.310.325.305.310.310

Proportional 4/2 Throttle Cartridge, Size 5

Q_{max} = 30 l/min, p_{max} = 250 bar
Sliding-spool design, direct acting
Series MDR42…-5…

- Compact construction for cavity type AN – 3/4-16 UNF
- Dual flow paths for higher flow rate
- Low headloss
- For use with inline or bypass pressure-compensator cartridges
- Reliable operation over the whole pressure and flow range
- With optional manual flow setting
- All exposed parts with zinc-nickel plating
- High pressure wet-armature solenoids
- The slip-on coil can be rotated, and it can be replaced without opening the hydraulic envelope
- Various plug-connector systems and voltages are available

1 Description

Series MDR42… direct acting proportional 4/2 throttle valves are size 5, high performance screw-in cartridges with a 3/4-16 UNF mounting thread. They are designed on the proven sliding-spool principle. The straightforward design delivers an outstanding price/performance ratio. "De-energised closed" and "de-energised open" functions are available. In control mode, the flow through the connections 1 → 3 und 4 → 2 is varied in proportion to the control current. Thanks to these dual flow paths, a higher flow rate is achieved with low headloss. It is essential that ports 1 + 4, and likewise 2 + 3, are joined together in the valve housing (manifold block). In combination with inline or bypass compensators, these 4/2 throttle cartridges are predominantly used in mobile and industrial applications to allow a flow in hydraulic installations to be controlled electro-proportionally. All external parts of the cartridge are zinc-nickel plated according to DIN EN ISO 19 598 and are thus suitable for use in the harshest operating environments. The slip-on coils can be replaced without opening the hydraulic envelope and can be positioned at any angle through 360°. For self-assembly, please refer to the section related data sheets.

2 Symbol

Dual flow paths

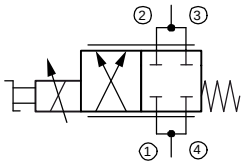

MDR42AD…-E

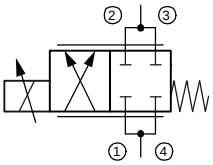

MDR42AD…

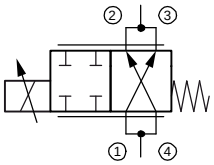

MDR42ANK…

IMPORTANT!
To enable the dual flow-path function, ports 1 + 4 and 2 + 3 must be connected within the valve housing (manifold block).

3 Technical data

General characteristics	Description, value, unit
Designation	proportional 4/2 throttle cartridge
Design	sliding-spool design, direct acting
Mounting method	screw-in cartridge 3/4-16 UNF
Tightening torque	40 Nm ± 10 %
Size	nominal size 5, cavity type AN
Weight	0.40 kg
Mounting attitude	unrestricted (preferably vertical, coil down)
Ambient temperature range	-30 °C … +50 °C

Hydraulic characteristics	Description, value, unit
Maximum operating pressure	250 bar
Maximum flow rate	30 l/min
Nominal flow rate 1 + 4 → 2 + 3	25 l/min at Δp = 4 bar
Leakage flow rate	< 400 cm^3/min (with p_N 250 bar) with oil viscosity 33 mm^2/s (cSt)
Flow direction	see symbols
Hydraulic fluid	HL and HLP mineral oil to DIN 51 524; for other fluids, please contact BUCHER
Hydraulic fluid temperature range	-30 °C … +70 °C
Viscosity range	15…380 mm^2/s (cSt), recommended 20...130 mm^2/s (cSt)
Minimum fluid cleanliness Cleanliness class to ISO 4406 : 1999	class 18/16/13

Electrical characteristics	Description, value, unit
Supply voltage	12 V DC, 24 V DC
Control current	12 V = 0…1400 mA, 24 V = 0…760 mA
Power consumption at max. control current	max. 19 W
Coil resistance R - cold value at 20 °C - max. warm value	12 V = 5.8 Ω / 24 V = 21 Ω 12 V = 8.6 Ω / 24 V = 32 Ω
Recommended PWM frequency (dither)	200 Hz
Hysteresis with PWM	2…4 % I_N
Reversal error with PWM	2…4 % I_N
Sensitivity with PWM	< 1 % I_N
Reproducibility with PWM	< 2 % p_N
Relative duty cycle	100 %
Protection class to ISO 20 653 / EN 60 529	IP 65 / IP 67 / IP 69K, see “Ordering code” (with appropriate mating connector and proper fitting and sealing)
Electrical connection	DIN EN 175301-803, 3-pin 2 P+E (standard) for other connectors, see “Ordering code”

4 Performance graphs measured with oil viscosity 33 mm²/s (cSt)

For use with compensator (max. Δp = 15 bar)

Δp = f (Q) Pressure drop - Flow rate characteristic

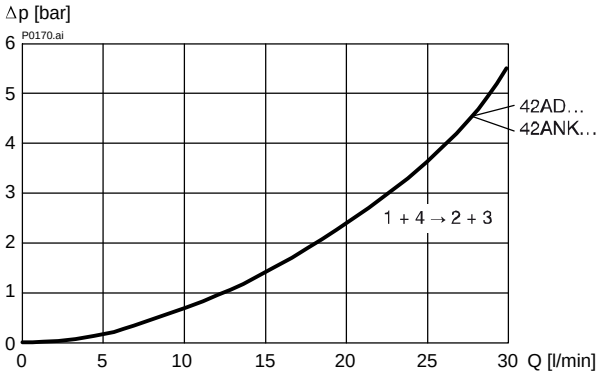

Q = f (I; Δp) Flow rate adjustment characteristic

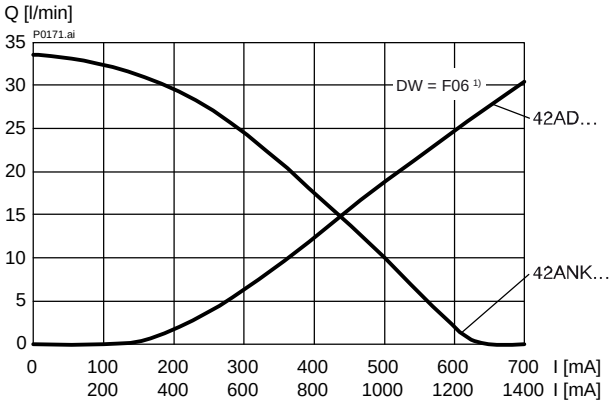

Q = f (Δp; I) Flow rate adjustment characteristic MDR42AD…

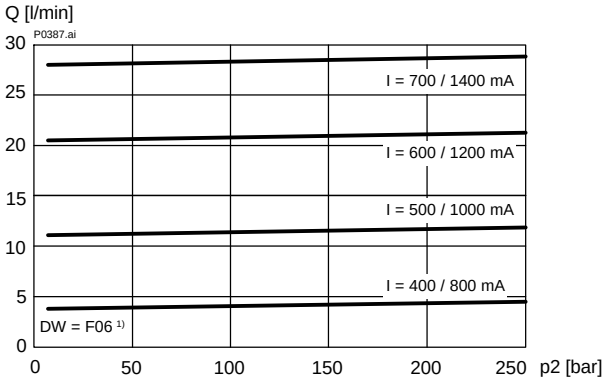

Q = f (Δp; I) Flow rate adjustment characteristic MDR42ANK…

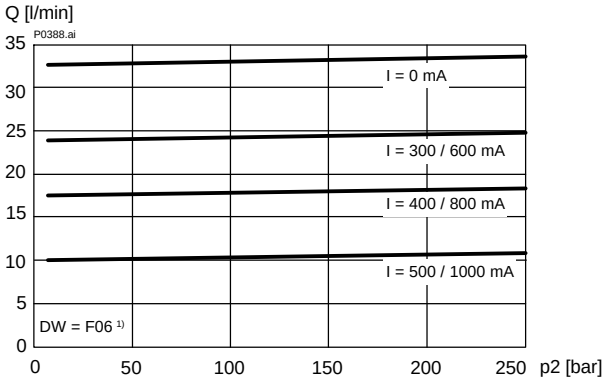

IMPORTANT!

1) Performance graphs measured with compensator model DWDPA-5D-10-F06-2

5 Installation information

IMPORTANT!

To achieve the maximum performance rating, fit the solenoid coil as shown (with the plug pins at the bottom) and install the valve in a steel body. When fitting the cartridges, note the mounting attitude (preferably vertical, with coil down → automatic air bleed) and use the specified tightening torque. No adjustments are necessary, since the cartridges are set in the factory.

ATTENTION!

Only qualified personnel with mechanical skills may carry out any maintenance work. Generally, the only work that should ever be undertaken is to check, and possibly replace, the seals. When changing seals, oil or grease the new seals thoroughly before fitting them.

6 Dimensions & sectional view

Without manual flow setting – standard

MDR42AD...

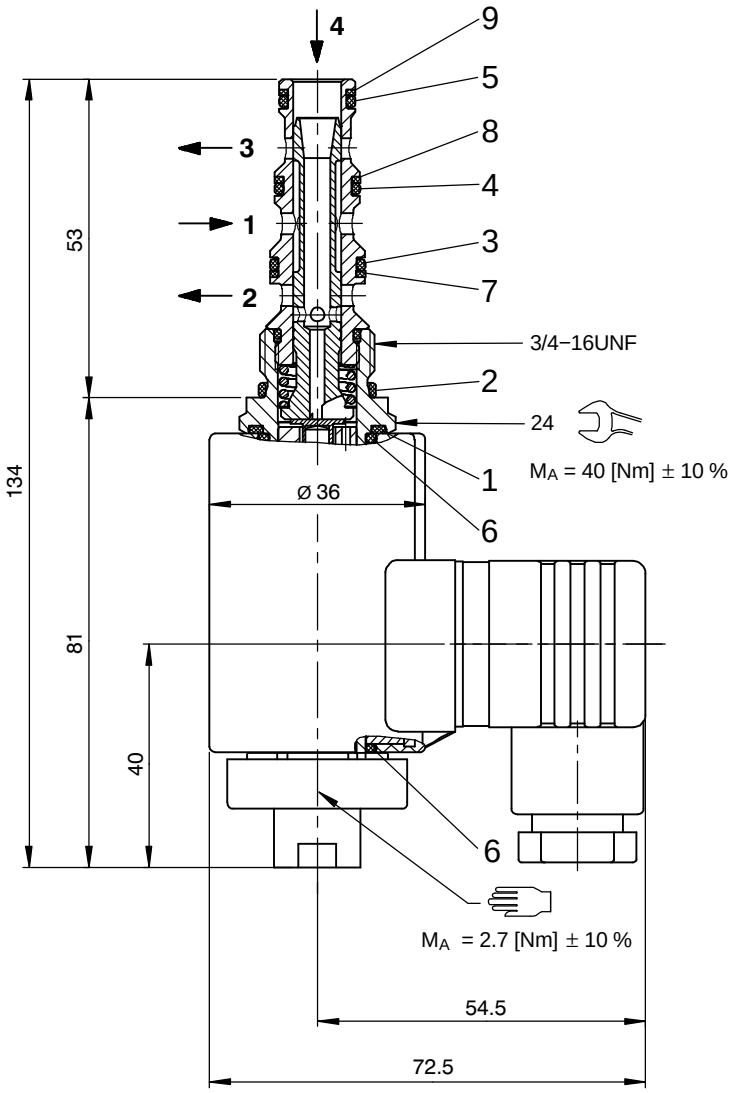

MDR42ANK...

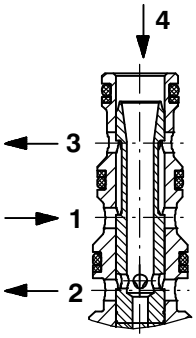

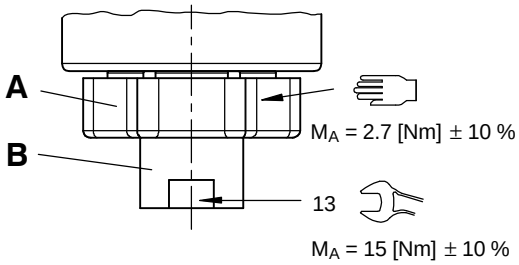

Seal kit no. DS-248-N [2)]

Item	Qty.	Description			
1	1	O-ring		∅ 18,00 x 2,00	FKM
2	1	O-ring	no. 017	∅ 17,17 x 1,78	N90
3	1	O-ring	no. 014	∅ 12,42 x 1,78	N90
4	1	O-ring	no. 013	∅ 10,82 x 1,78	N90
5	1	O-ring	no. 012	∅ 09,25 x 1,78	N90
6	2	O-ring		∅ 16,00 x 2,00	FkM
7	1	Backup ring		∅ 10.70 x 1.45 x 1.40	FI0751
8	1	Backup ring		∅ 09.40 x 1.45 x 1.00	FI0751
9	1	Backup ring		∅ 07.80 x 1.45 x 1.00	FI0751

IMPORTANT!

2) Seal kit with FKM (Viton) seals no. DS-248-V

Air-bleeding

If necessary, air can be purged from these proportional throttle cartridges by using the cap nut (Item B). The procedure is as follows:

A Knurled nut

B Cap nut

Steps:

1. Slacken and remove the knurled nut.
2. Slacken the cap nut approx. 1.5 turns.
   Caution: Slackening the cap nut allows oil to spray out!
3. Switch the proportional throttle cartridge ON/OFF several times until no more air bubbles escape.
4. Tighten the cap nut.
5. Refit the knurled nut and tighten it.

With manual flow setting – Option “E”

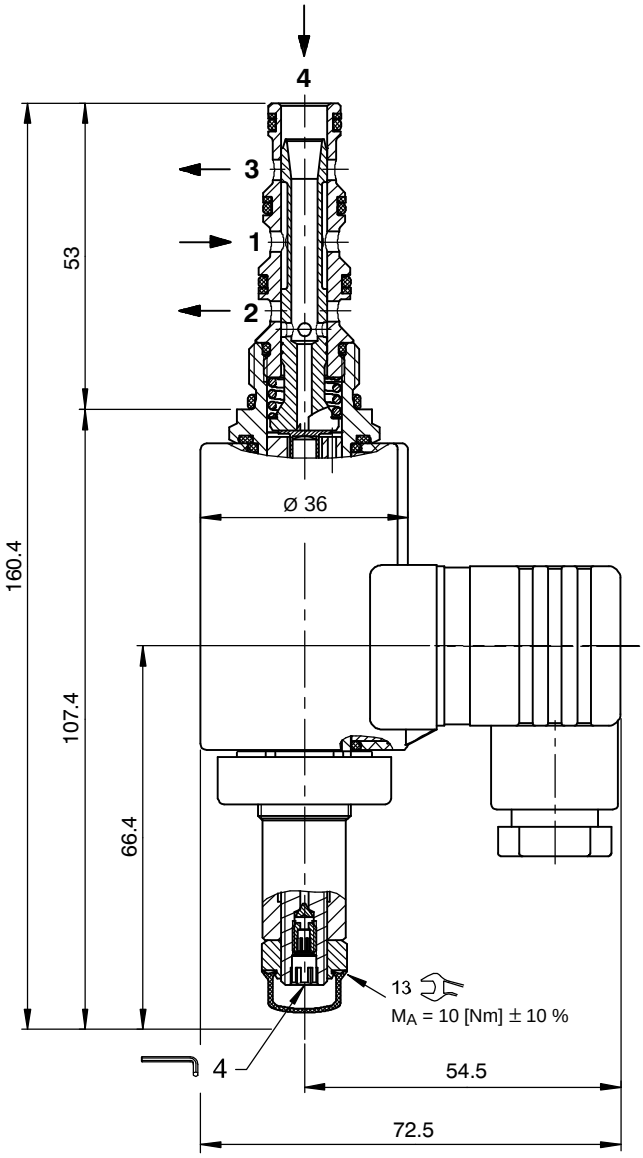

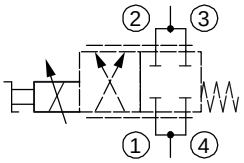

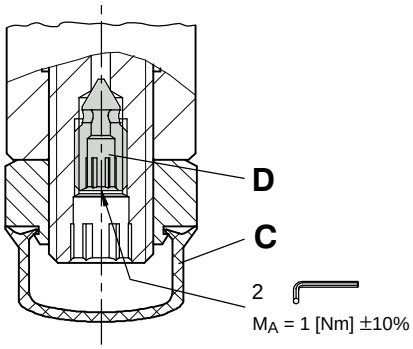

Integral air-bleeding

If necessary, air can be purged from these proportional throttle cartridges by using the integral air-bleed screw (Item D). The procedure is as follows:

C Protective cap

D Air-bleed screw

Steps:

1. Remove the protective cap.
2. Slacken the air-bleed screw approx. 2 turns.
3. Switch the proportional throttle cartridge ON/OFF several times until no more air bubbles escape.
4. Tighten the air-bleed screw.
5. Fit the protective cap.

7 Manual flow setting

Optionally, the proportional throttle cartridges can be supplied with an integral manual flow setting. If a proportional solenoid is faulty, for example, this manual flow setting enables the required flow rate to be set mechanically. **This manual flow setting is not designed for adjusting the flow in a dynamic control mode.**

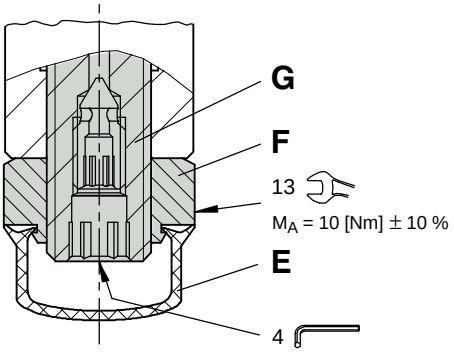

E Protective cap

F Lock nut (13 A/F)

G Adjusting spindle for volume setting

Setting the flow rate manually

Steps:

1. Remove the protective cap.
2. Slacken the lock nut (13 A/F).
3. Screw in (turn to right) the adjusting spindle (4 A/F) until the required flow rate is set.
4. Tighten the lock nut (13 A/F).
5. Fit the protective cap.

Restoring the factory settings

Steps:

1. Solenoid de-energised.
2. Remove the protective cap.
3. Slacken the lock nut (13 A/F).
4. Unscrew the adjusting spindle (4 A/F) to its end-stop, then screw it in 2 1/8 turns.
5. Tighten the lock nut (13 A/F).
6. Fit the protective cap.

8 Application examples

Used with bypass pressure-compensator cartridge

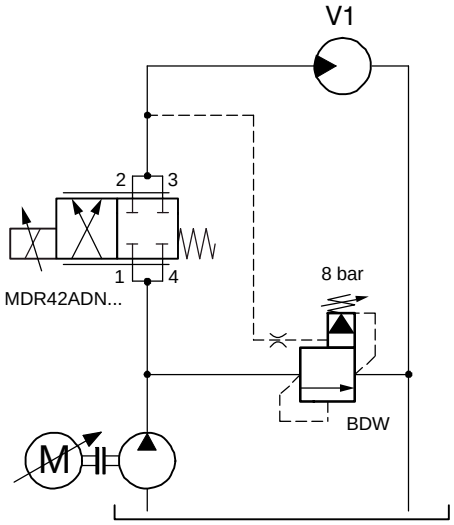

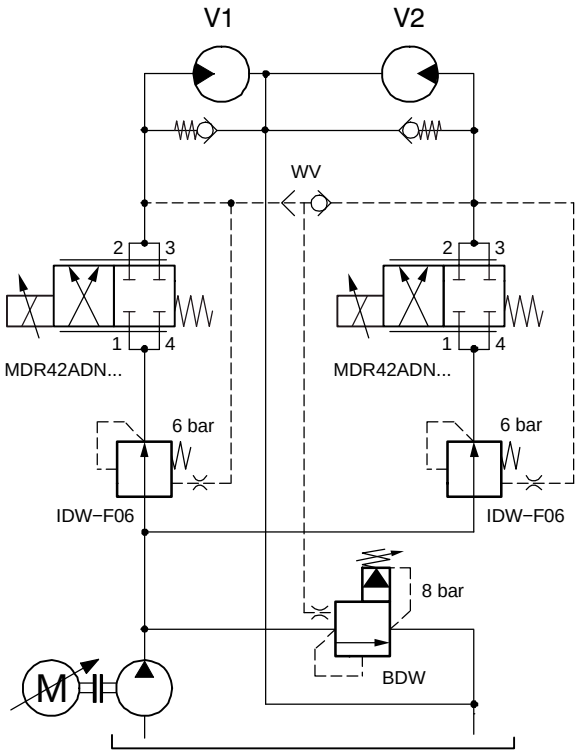

9 Ordering code

Ex. M | D | R | 42AD | N | A | 5 | _ - _ - 1 | 24 | D | _

M	=	flow-control valve
D	=	direct acting
R	=	proportional solenoid
42AD	=	4/2 function (de-energised closed)
42ANK	=	4/2 function (de-energised open)
N	=	electrically operated, V DC = 27 W
A ... Q	=	type only for use with compensator (**standard**)
Z ... R	=	special features - please consult BUCHER
5	=	nominal size 5
(blank)	=	NBR (Nitrile) seals (**standard**)
V	=	FKM (Viton) seals (special seals - please contact BUCHER)
(blank)	=	no manual flow setting (**standard**)
E	=	with manual flow setting
1 ... 9	=	design stage (omit when ordering new units)
...	=	voltage e.g. **24** (24 V)
D	=	current DC
(blank)	=	DIN EN 175301-803 connection with mating plug (**standard, IP 65**)
M100	=	DIN EN 175301-803 connection without mating plug
C	=	Kostal plug connection (IP 65)
JT	=	Junior Timer radial plug connection (with protection diode, IP65)
IT	=	Junior Timer axial plug connection (with protection diode, IP65)
D	=	Deutsch plug connection 45° DT04-2P (IP67/69K)
DT	=	Deutsch plug connection 45° DT04-2P (with protection diode, IP67/69K)
S	=	AMP Superseal 1.5 (IP67) / Metri-Pack 150 (IP65) plug connection
F	=	flying leads (500 mm)

mating plug not supplied

10 Related data sheets

Reference	(Old no.)	Description
400-P-040011	(i-32)	The form-tool hire programme
400-P-040181	(i-33.12)	Cavity type AN
400-P-120110	(W-2.141)	Coils for screw-in cartridge valves series D36
400-P-510101		Amplifier unit for proportional valves (1-channel) PBS - 3A

info.ch@bucherhydraulics.com www.bucherhydraulics.com

© 2024 by Bucher Hydraulics AG Frutigen, CH-3714 Frutigen
All rights reserved.
Data is provided for the purpose of product description only, and must not be construed as warranted characteristics in the legal sense. The information does not relieve users from the duty of conducting their own evaluations and tests. Because the products are subject to continual improvement, we reserve the right to amend the product specifications contained in this catalogue.

Classification: 430.310.325.305.310.310

Proportional 4/2 Throttle Cartridge, Size 5

Q_{max} = 55 l/min (14 gpm), p_{max} = 250 bar (3600 psi)
Sliding-spool design, direct acting
Series MDT42A…NY-5

- Compact construction for cavity type AN – 3/4-16 UNF
- Dual flow-paths for higher flow rate
- For use with inline or bypass pressure compensator
- Optional with two emergency manual flow settings
- Reliable operation over the whole pressure and flow range
- All exposed parts with zinc-nickel plating
- High pressure wet-armature solenoids
- The slip-on coil can be rotated, and it can be replaced without opening the hydraulic envelope
- Various plug-connector systems and voltages are available

1 Description

Series MDT42A… direct acting proportional 4/2 throttle valves are size 5, high performance screw-in cartridges with a 3/4-16 UNF mounting thread. They are designed on the proven sliding-spool principle. The straightforward design delivers an outstanding price/performance ratio. "De-energized closed" and "de-energized open" functions are available. In control mode, the flow through the connections 3 to 1 and 4 to 2 is varied in proportion to the control current. Thanks to these dual flow paths, a higher flow rate is achieved with low headloss. It is essential that ports 3 + 4, and likewise 1 + 2, are joined toghether in the valve housing (manifold block). In combination with inline or bypass pressure compensators, these 4/2 throttle cartridges are predominantly used in mobile and industrial applications for precise and proportional control of flow rates. Optionally, the valves are available with a push-button emergency operation or an emergency manual flow setting via tool wrench. All external parts of the cartridge are zinc-nickel plated according to DIN EN ISO 19 598 and are thus suitable for use in the harshest operating environments. The slip-on coils can be replaced without opening the hydraulic envelope and can be positioned at any angle through 360°. For self-assembly, please refer to the section related data sheets.

2 Symbol

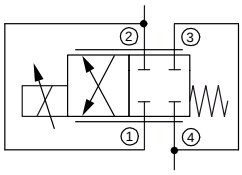

MDT42AK2NNY-…-O

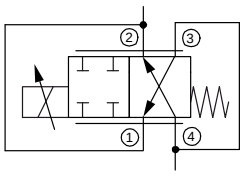

MDT42ANK2NY-…-O

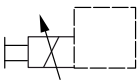

MDT42A_-…-P

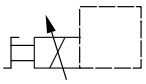

MDT42A_-…-S

3 Technical data

General characteristics	Description, value, unit
Designation	proportional 4/2 throttle cartridge
Design	sliding-spool design, direct acting
Mounting method	screw-in cartridge 3/4-16 UNF
Tightening torque	40 Nm ± 10 % (30 ft-lbs ± 10 %)
Size	nominal size 5, cavity type AN

General characteristics	Description, value, unit
Weight	0.55 kg (1.21 lbs)
Mounting attitude	unrestricted (preferably vertical, coil down)
Ambient temperature range	-30 °C … +60 °C (-22 °F … +140 °F)
$MTTF_D$ values	150 years, see data sheet 400-P-010101-en

Hydraulic characteristics	Description, value, unit
Maximum operating pressure	250 bar (3600 psi)
Maximum flow rate	55 l/min (14 gpm)
Nominal flow rate 3 + 4 → 1 + 2	45 l/min at Δp = 10 bar (11 gpm at Δp = 145 psi)
Leakage flow rate 3 + 4 → 1 + 2	< 350 cm^3/min (with p_N 250 bar) with oil viscosity 33 mm^2/s (cSt)
Flow direction	see performance graphs Suitable only for dual flow-paths. One-way flow on request.
Hydraulic fluid	HL and HLP mineral oil to DIN 51 524; for other fluids, please contact BUCHER
Hydraulic fluid temperature range	-30 °C … +70 °C (-22 °F … +185 °F)
Viscosity range	15…380 mm^2/s (cSt), recommended 20...130 mm^2/s (cSt)
Minimum fluid cleanliness Cleanliness class to ISO 4406 : 1999	class 18/16/13

Electrical characteristics	Description, value, unit
Supply voltage	12 V DC, 24 V DC
Control current	12 V = 0…1600 mA, 24 V = 0…800 mA
Power consumption at max. control current	max. 17.5 W
Coil resistance R - cold value at 20 °C - max. warm value	12 V = 4.35 Ω / 24 V = 17.2 Ω 12 V = 6.8 Ω / 24 V = 26.9 Ω
Recommended PWM frequency (dither)	150 Hz
Hysteresis with PWM	2…5 % I_N
Reversal error with PWM	2…5 % I_N
Sensitivity with PWM	< 2 % I_N
Reproducibility with PWM	< 3 % p_N
Relative duty cycle	100 %
Protection class to ISO 20 653 / EN 60 529	IP 65 / IP 67 / IP 69K, see “Ordering code” (with appropriate mating connector and proper fitting and sealing)
Electrical connection	DIN EN 175301-803, 3-pin 2 P+E (standard) for other connectors, see “Ordering code”

4 Performance graphs measured with oil viscosity 33 mm²/s (cSt)

Δp = f (Q) Pressure drop - Flow rate characteristic

Δp = [bar (psi)]

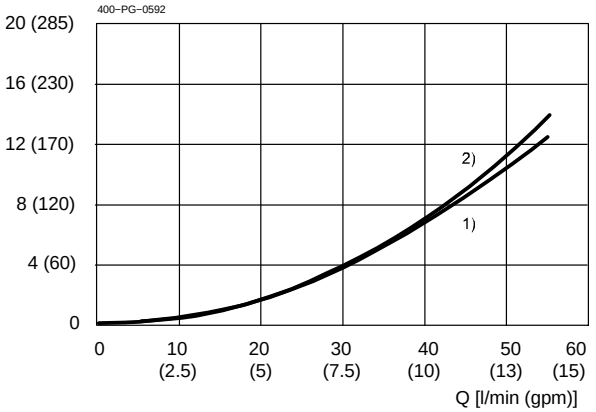

1) 42AK2NN Y 3+4 → 1+2
2) 42ANK2N Y 3+4 → 1+2

Q = f (I; Δp) Flow rate adjustment characteristic [MDT42AK2NNY]
with pressure compensator 3+4 → 1+2 *)

Q [l/min (gpm)]

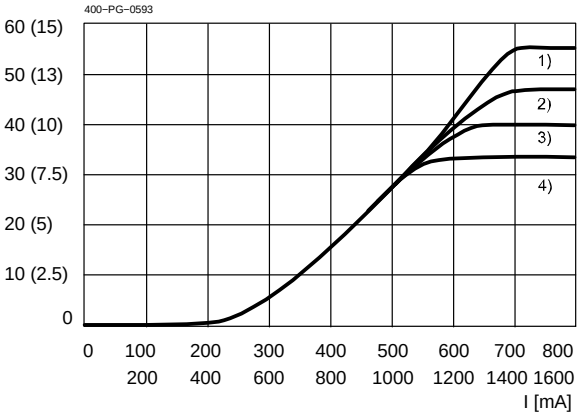

1) DWDPB-5D-10-F0515… (15 bar)
2) …F10…
3) …F08…
4) …F06…

Q = f (I; Δp) Flow rate adjustment characteristic [MDT42ANK2Y]
with pressure compensator 3+4 → 1+2 *)

Q [l/min (gpm)]

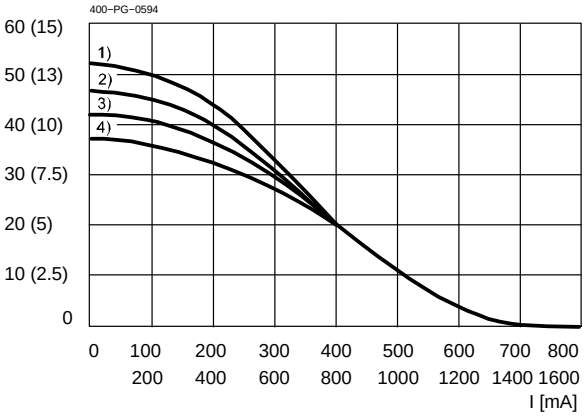

1) DWDPB-5D-10-F0515… (15 bar)
2) …F10…
3) …F08…
4) …F06…

IMPORTANT!

*) Performance graphs measured with compensator model DWDPB-5D-10-F_-1

WWW.SUMY.IR

Q = f (p;l) Volume flow-load pressure
[MDT42AK2NNY]
with pressure compensator 3+4 → 1+2 *)

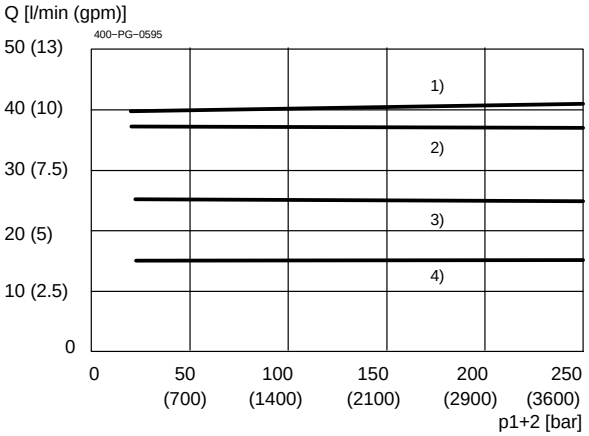

DWDPB−5D−10−F08...
1) I = 800/1600 mA
2) I = 600/1200 mA
3) I = 500/1000 mA
4) I = 400/800 mA

Q = f (p;l) Volume flow-load pressure
[MDT42ANK2Y]
with pressure compensator 3+4 → 1+2 *)

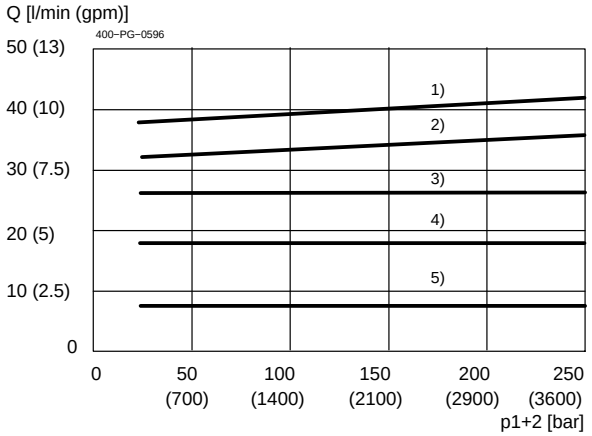

DWDPB−5D−10−F08...
1) I = 0mA
2) I = 200/400 mA
3) I = 300/600 mA
4) I = 400/800 mA
5) I = 500/1000 mA

IMPORTANT!

*) Performance graphs measured with compensator model DWDPB-5D-10-F_-1

5 Dimensions & sectional view

5.1 Standard without emergency operation option "O"

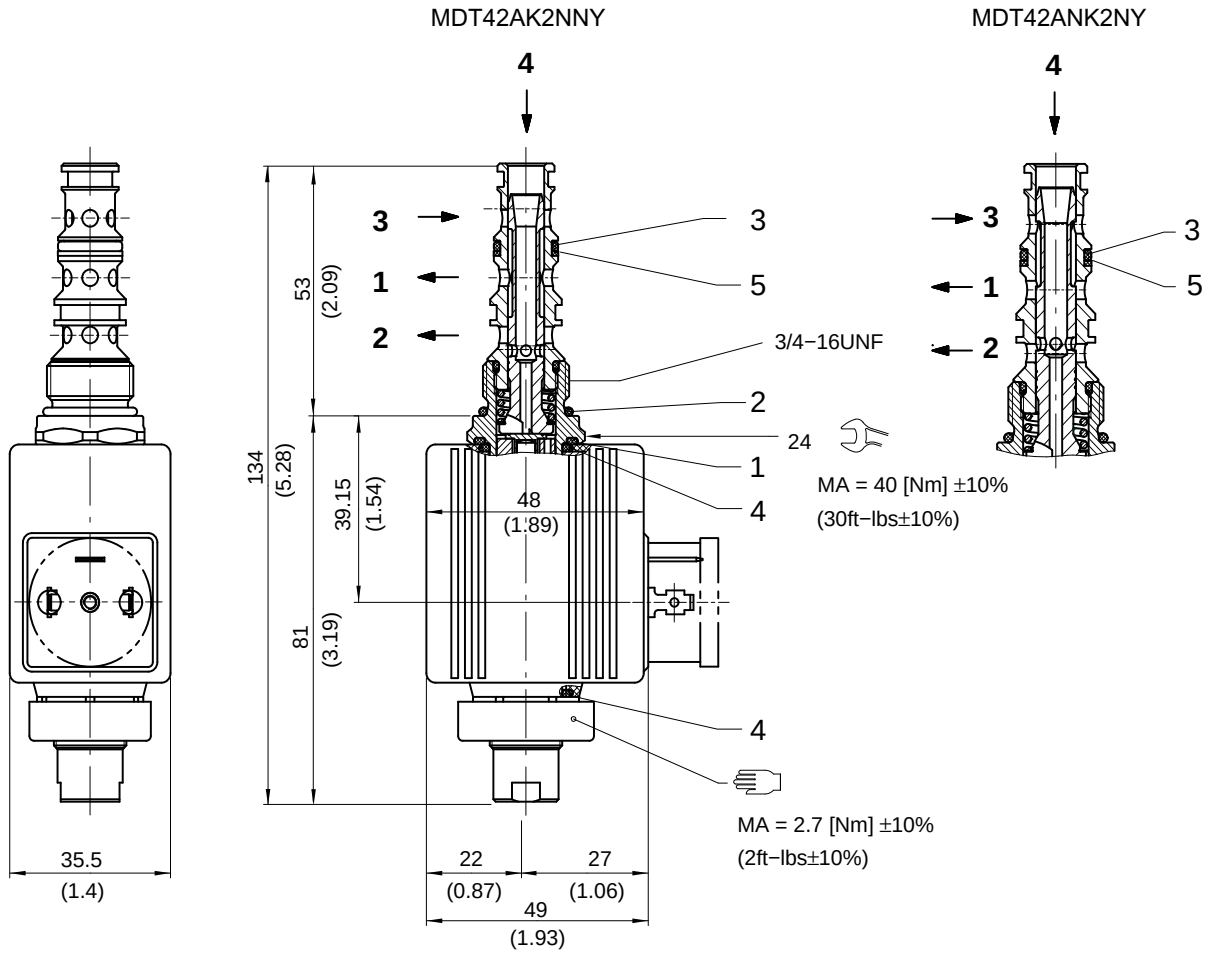

5.2 Option with emergency override pin "P" and option with emergency override "S"

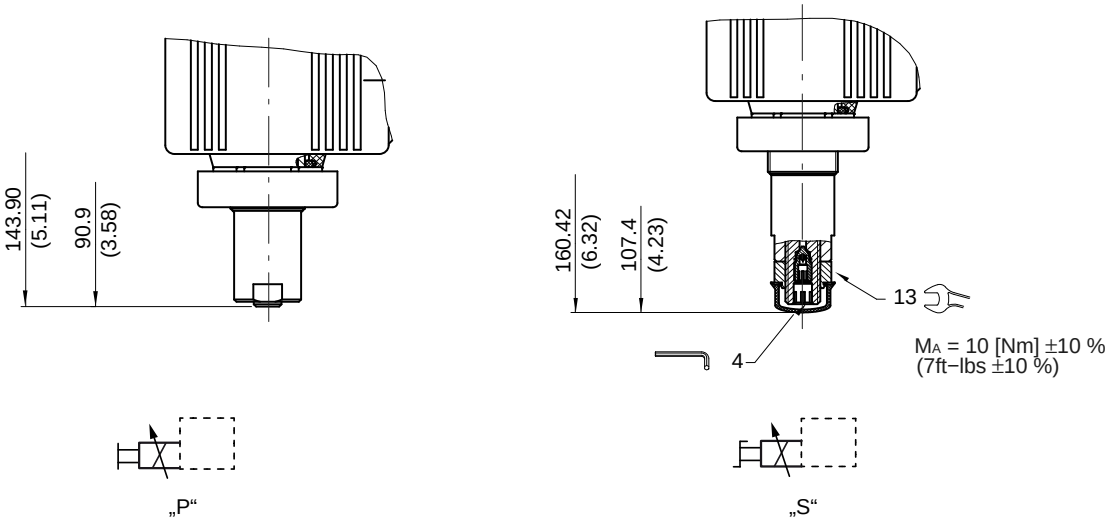

Seal kit NBR no. DS-248-N **)

Item	Qty.	Description			
1	1	O-ring		∅ 18,00 x 2,00	FKM
2	1	O-ring	no. 017	∅ 17,17 x 1,78	N90
3	1	O-ring	no. 013	∅ 10,82 x 1,78	N90
4	2	O-ring		∅ 16.00 x 2,00	FKM
5	1	Backup ring		∅ 09.40 x 1.45 x 1.00	FI0751

IMPORTANT!

**) Seal kit with FKM (Viton) seals no. DS-248-V

Air-bleeding for option "O" and "P"

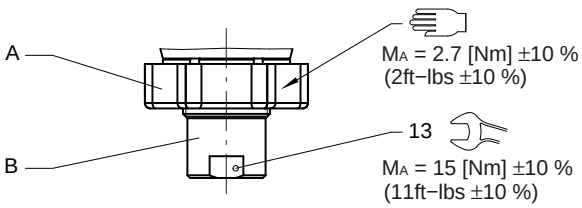

Air-bleeding

If necessary, air can be purged from these proportional throttle cartridges by using the cap nut (Item B). The procedure is as follows:

A Knurled nut

B Cap nut

Steps:

1. Slacken and remove the knurled nut.
2. Slacken the cap nut approx. 1.5 turns.

   Caution:
   Slackening the cap nut allows oil to spray out!
3. Switch the proportional throttle cartridge ON/OFF several times until no more air bubbles escape.
4. Tighten the cap nut.
5. Refit the knurled nut and tighten it.

Air-bleeding for option "S"

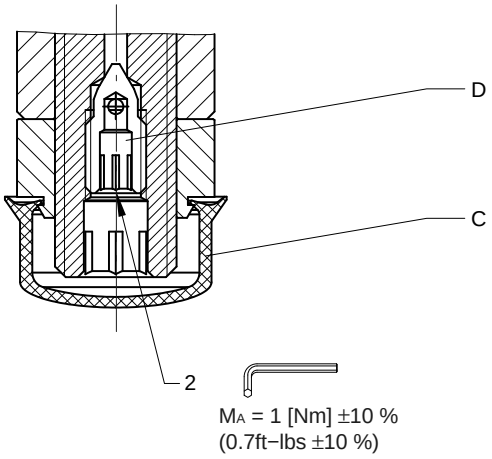

Integral air-bleeding

If necessary, air can be purged from these proportional throttle cartridges by using the integral air-bleed screw (Item D). The procedure is as follows:

C Protective cap

D Air-bleed screw

Steps:

1. Remove the protective cap.
2. Slacken the air-bleed screw approx. 2 turns.
3. Switch the proportional throttle cartridge ON/OFF several times until no more air bubbles escape.
4. Tighten the air-bleed screw (Ma = 1 Nm ± 10%).
5. Fit the protective cap.

6 Installation information

IMPORTANT!
To achieve the maximum performance rating, fit the solenoid coil as shown (with the plug pins at the top or at the knurled nut) and install the valve in a steel body. When fitting the cartridges, note the mounting attitude (preferably vertical, with coil down → automatic air bleed) and use the specified tightening torque. No adjustments are necessary, since the cartridges are set in the factory.

ATTENTION!
Only qualified personnel with mechanical skills may carry out any maintenance work. Generally, the only work that should ever be undertaken is to check, and possibly replace, the seals. When changing seals, oil or grease the new seals thoroughly before fitting them.

7 Emergency manual flow setting

Optionally, the proportional throttle cartridges can be supplied with an integral manual flow setting. If a proportional solenoid is faulty, for example, this manual flow setting enables the required flow rate to be set mechanically. **This manual flow setting is not designed for adjusting the flow in a dynamic control mode.**

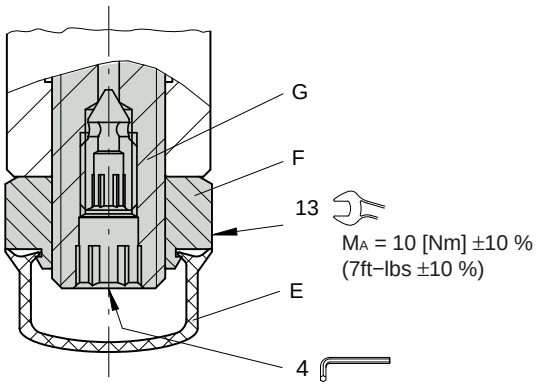

E Protective cap

F Lock nut (13 A/F)

G Adjusting spindle for volume setting

Setting the flow rate manually

Steps:

1. Remove the protective cap.
2. Slacken the lock nut (13 A/F).
3. Screw in (turn to right) the adjusting spindle (4 A/F) until the required flow rate is set.
4. Tighten the lock nut (13 A/F).
5. Fit the protective cap.

Restoring the factory settings

Steps:

1. Solenoid de-energized.
2. Remove the protective cap.
3. Slacken the lock nut (13 A/F).
4. Unscrew the adjusting spindle (4 A/F) to its end-stop, then screw it in 2 turns.
5. Tighten the lock nut (13 A/F).
6. Fit the protective cap.

8 Application examples

Option with bypass pressure compensator

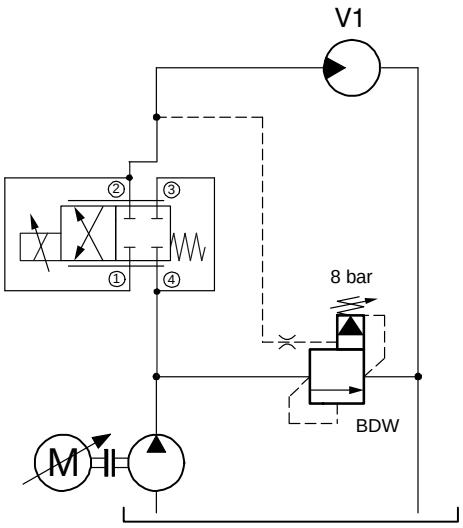

Classic combination with inline and bypass pressure compensator

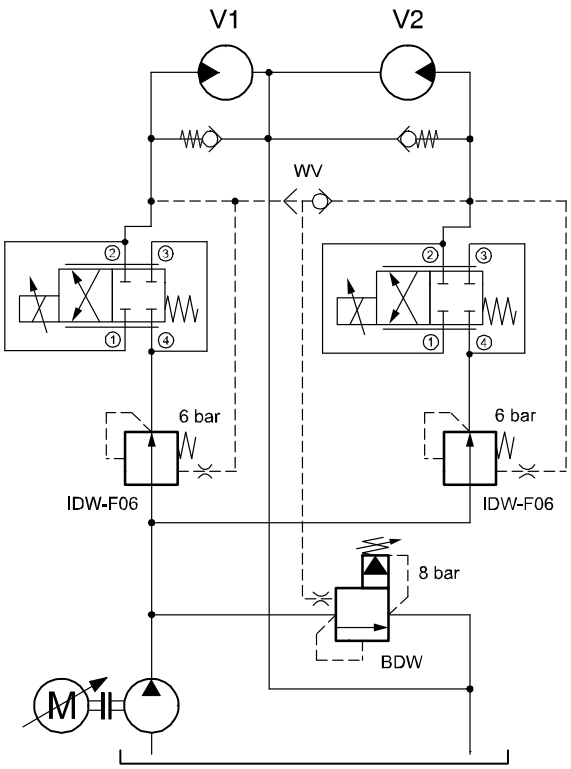

9 Ordering code

Ex. M D T 42 AK2N N Y – 5 O _ – 1 – 24 D – _ _

M	=	flow−control valve (throttle cartridge)
D	=	direct acting
T	=	solenoid operated (proportional) − coil 36x48
42	=	4−way/2−position
AK2N	=	AK2N spool* (de-energized closed)
ANK2	=	ANK2 spool* (de-energized open)
N	=	cavity type AN
Y	=	only for use with pressure compensator
5	=	nominal size 5
O	=	without manual override
P	=	push override with pin
S	=	screw−in manual override
(blank)	=	NBR (Nitrile) seals (standard)
V	=	FKM (Viton) seals (special seals − please contact BUCHER)
1 ... 9	=	design stage (omit when ordering new units)
...	=	voltage e.g. 24 (24 V)
D	=	current DC
G	=	standard plug connection according to DIN EN (3-pin 2 P+E, IP65)
J	=	Junior Timer radial plug connection (IP 65)
JR	=	Junior Timer radial plug connection (with quenching diode, IP 65)
U	=	Deutsch radial plug connection DT04-2P (IP 67/69K)
UR	=	Deutsch radial plug connection DT04-2P (with quenching diode, IP 67/69K)
without	=	connection without mating plug
Q	=	only connection "G" with mating plug

* Only with dual flow−path. One−way or asymmetric flow on request..

10 Related data sheets

Reference	(Old no.)	Description
400-P-040011	(i-32)	The form-tool hire programme
400-P-040181	(i-33.11)	Cavity type AM
400-P-120212	(W-2.141)	Coils for screw-in cartridge valves coil 36X48
400-P-010101		$MTTF_D$ values for hydraulic valves

info.ch@bucherhydraulics.com www.bucherhydraulics.com

© 2024 by Bucher Hydraulics AG Frutigen, CH-3714 Frutigen
All rights reserved.
Data is provided for the purpose of product description only, and must not be construed as warranted characteristics in the legal sense. The information does not relieve users from the duty of conducting their own evaluations and tests. Because the products are subject to continual improvement, we reserve the right to amend the product specifications contained in this catalogue.

Classification: 430.310.325.305.310.310

Proportional Throttle Cartridges, Size 5 / SAE 08

Q_{max} = 50 l/min (13 gpm), p_{max} = 250 bar (3600 psi)
Two-Stage, with Seat-Valve Shut-Off
Series MVRPSBA-…

- De-energised closed
- Seat-valve shut-off in flow direction (see symbol)
- Q_N = 20 l/min (5.3 gpm) at Δp 10 bar (140 psi)
- Compact construction for cavity types: AL or BH/C0820 – 3/4-16 UNF
- Reliable operation over the whole pressure and flow range (even at high pressure differences)
- Low headloss
- All exposed parts with zinc-nickel plating
- High pressure wet-armature solenoids
- The slip-on coil can be rotated, and it can be replaced without opening the hydraulic envelope
- Various plug-connector systems and voltages are available
- Can be fitted in a line-mounting body

1 Description

Series MVRPSBA-… two-stage proportional throttle cartridges are size 5 / SAE 08, high performance screw-in valves with a 3/4-16 UNF mounting thread. The main and pilot stages are designed on the poppet/seat principle and are therefore virtually leak-free in the flow direction (see symbol). With these proportional throttle cartridges, the flow rate is dependent on the electrical control current, and it can be varied continuously and responsively. When used with a pressure compensator, these cartridges are particularly suitable for precise and load-compensated lifting and lowering movements, but they can also be used on their own for reliable operation in mobile and industrial applications with large pressure differences. All external parts of the cartridge are zinc-nickel plated to DIN 50 979 and are thus suitable for use in the harshest operating environments. The slip-on coils can be replaced without opening the hydraulic envelope and can be positioned at any angle through 360°. If you intend to manufacture your own cavities or are designing a line-mounting installation, please refer to the section “Related data sheets”.

2 Symbol

Cavity type AL

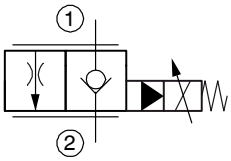

MVRPSBA-LG…

Cavity type BH/C0820

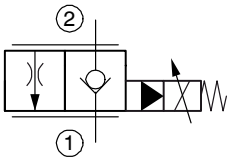

MVRPSBA-HG…

3 Technical data

General characteristics	Description, value, unit
Designation	proportional-throttle cartridge
Design	seat-valve shut-off, two stage
Mounting method	screw-in cartridge 3/4-16 UNF
Tightening torque	40 Nm ± 10 % (30 ft-lbs ± 10 %)

WWW.SUMY.IR

General characteristics	Description, value, unit
Size	nominal size 5 for cavity type AL nominal size 5 for cavity type BH/C0820 size SAE 08 for cavity type C0820
Weight	0.40 kg (0.9 lbs)
Mounting attitude	unrestricted (preferably vertical, coil down)
Ambient temperature range	-25 °C … +50 °C (-13 °F … +122 °F)
$MTTF_D$ values	150 years, see data sheet 400-P-010101-en

Hydraulic characteristics	Description, value, unit
Maximum operating pressure	250 bar (3600 psi)
Maximum flow rate	50 l/min (13 gpm)
Nominal flow rate	20 l/min at Δp = 10 bar (5.3 gpm at Δp = 140 psi)
Leakage flow rate	< 0,2 cm^3/min (max. 5 drops/min) with oil viscosity 33 mm^2/s (cSt)
Flow direction	see symbol
Hydraulic fluid	HL and HLP mineral oil to DIN 51 524; for other fluids, please contact BUCHER
Hydraulic fluid temperature range	-25 °C … +70 °C (-13 °F … +158 °F)
Viscosity range	15…380 mm^2/s (cSt), recommended 20...130 mm^2/s (cSt)
Minimum fluid cleanliness Cleanliness class to ISO 4406 : 1999	class 18/16/13

Electrical characteristics	Description, value, unit
Supply voltage	12 V DC, 24 V DC
Control current	12 V = 0…1400 mA, 24 V = 0…760 mA
Coil resistance R - cold value at 20 °C - max. warm value	12 V = 5.8 Ω / 24 V = 20.9 Ω 12 V = 9.1 Ω / 24 V = 32.7 Ω
Recommended PWM frequency (dither)	200 Hz
Hysteresis with PWM	3…6 % I_N
Reversal error with PWM	3…6 % I_N
Sensitivity with PWM	< 2 % I_N
Reproducibility with PWM	< 3 % p_N
Switching time	see performance graphs
Relative duty cycle	100 %
Protection class to ISO 20 653 / EN 60 529	IP 65 / IP 67 / IP 69K, see “Ordering code” (with appropriate mating connector and proper fitting and sealing)
Electrical connection	DIN EN 175301-803, 3-pin 2 P+E (standard) for other connectors, see “Ordering code”

4 Performance graphs

measured with oil viscosity 33 mm²/s (cSt) – for cavity type AL and BH/C0820

Δp = f (Q) Pressure drop - Flow rate characteristic
"energized"

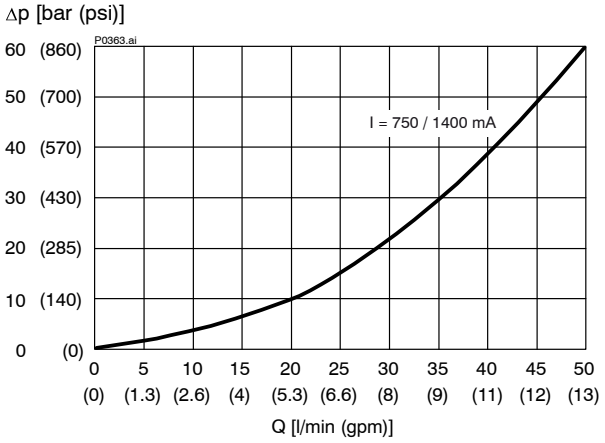

Δp = f (Q) Pressure drop - Flow rate characteristic
"de-energized - through check valve"

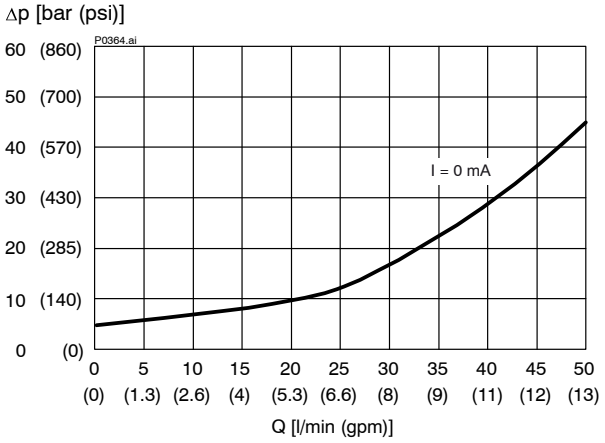

Attention:
When flow passes through the check valve and there is a large pressure difference, the poppet in the main stage can be damaged.

Q = f (Δp; I) Flow rate adjustment characteristic

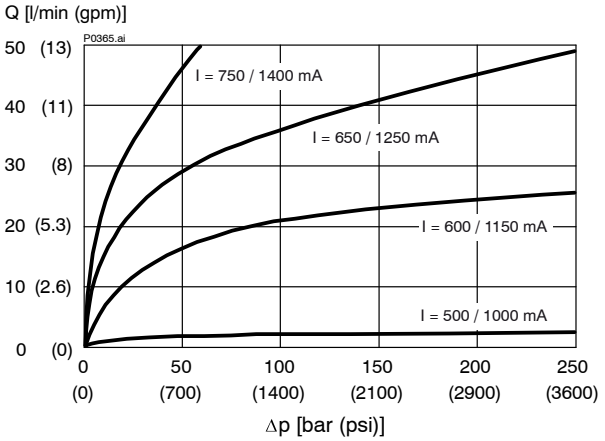

Q = f (I; Δp) Flow rate adjustment characteristic

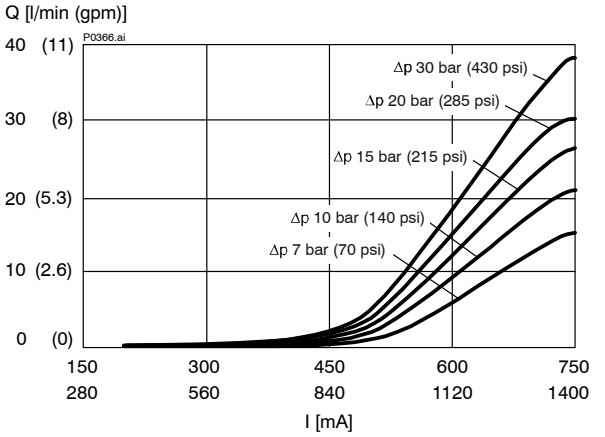

Switching time measured up to 80 % change in the pressure difference. Electrical operation with DC power supply.

t = f (I; Δp) Switching time characteristic **Opening**
at Δp = 10 … 50 bar (140 … 700 psi)

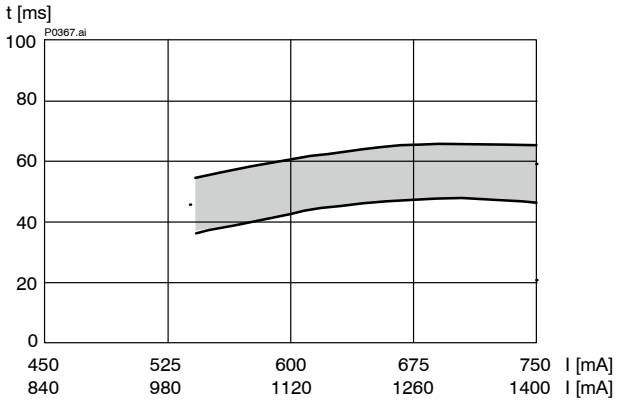

t = f (I; Δp) Switching time characteristic **Closing**
at Δp = 10 … 50 bar (140 … 700 psi])

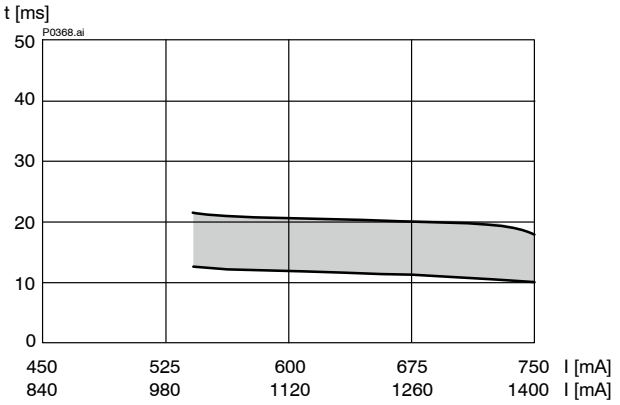

5 Dimensions & sectional view

Dimensions in millimeters (inches)

5.1 Insertion in cavity type “AL”

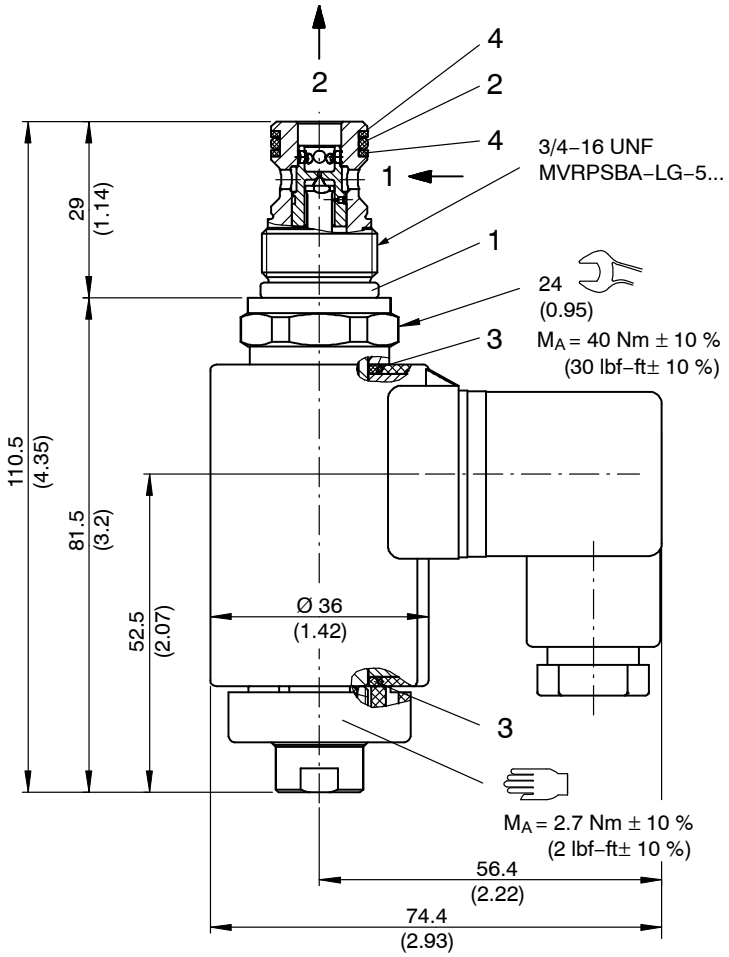

5.2 Insertion in cavity type “BH/C0820”

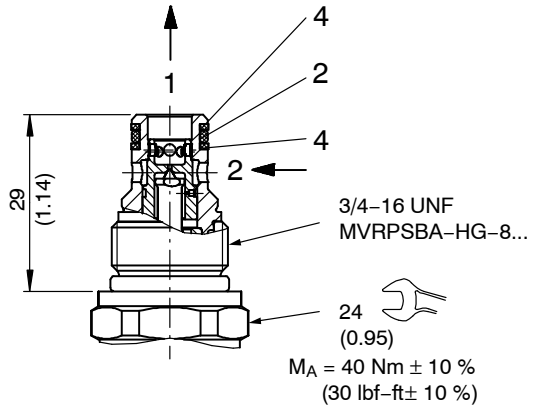

6 Installation information

IMPORTANT!
To achieve the maximum performance rating, fit the solenoid coil as shown (with the plug pins at the bottom) and install the valve in a steel body. When fitting the cartridges, note the mounting attitude (preferably vertical, with coil down → automatic air bleed) and use the specified tightening torque. No adjustments are necessary, since the cartridges are set in the factory.

ATTENTION!
Only qualified personnel with mechanical skills may carry out any maintenance work. Generally, the only work that should ever be undertaken is to check, and possibly replace, the seals. When changing seals, oil or grease the new seals thoroughly before fitting them.

Seal kit NBR no. DS-447-N (cavity type AL) [1)]

Item	Qty.	Description
1	1	O-ring no. 017 ∅ 17.17 x 1.78 N90
2	1	O-ring no. 014 ∅ 12.42 x 1.78 N90
3	2	O-ring ∅ 16.00 x 2.00 FKM
4	2	Backup ring ∅ 10.70 x 1.45 x 1.00 FI0751

IMPORTANT!
[1)] Seal kit with FKM (Viton) seals, no. DS-447-V

Seal kit NBR no. DS-448-N (cavity type BH/C0820) [2)]

Item	Qty.	Description
1	1	O-ring no. 017 ∅ 17.17 x 1.78 N90
2	1	O-ring no. 012 ∅ 9.25 x 1.78 N90
3	2	O-ring ∅ 16.00 x 2.00 FKM
4	2	Backup ring ∅ 7.80 x 1.45 x 1.00 FI0751

IMPORTANT!

[2)] Seal kit with FKM (Viton) seals, no. DS-448-V

7 Application examples

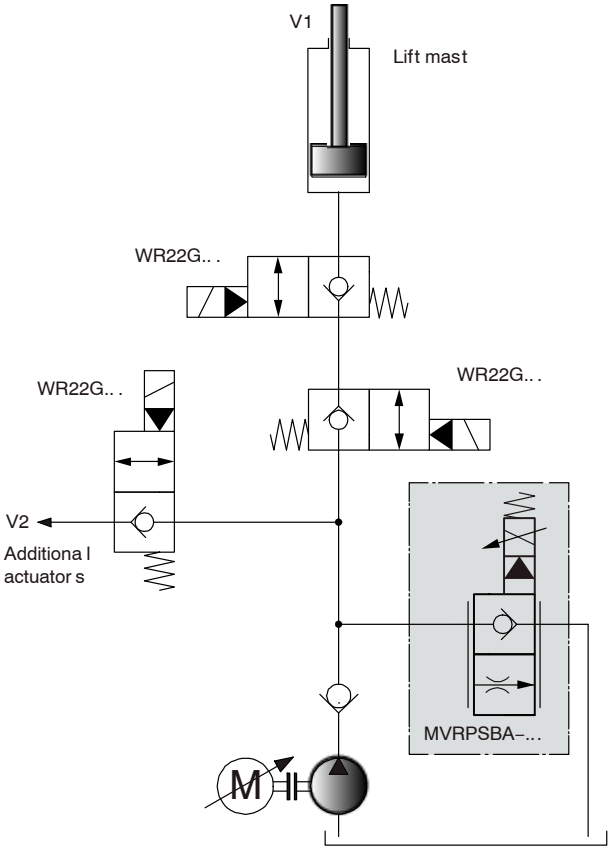

Potential applications

- Lifting and lowering movements on industrial trucks
- In agricultural machines, e.g. proportional scraper-floor controls in self-loading trailers
- In all applications where a load-independent function is required, in combination with our in-line or bypass pressure compensators

8 Ordering code

MV R P S B A - _ G - 5 - 20 _ - 1 24 D _

MV	=	throttle valve, two-stage
R	=	proportional-solenoid operated
P	=	cartridge design
S	=	seat-valve design
B	=	pressurised oil enters at the side
A ... Q	=	standard model - see relevant data sheets
Z ... R	=	special features - please consult BUCHER
L	=	cavity type AL
H	=	cavity type BH/C0820 and C0820
G	=	normally closed
5	=	nominal size 5 / SAE 08
20	=	nominal flow rate 20 l/min at Δp = 10 bar (5.3 l/min bei Δp = 140 psi)
(blank)	=	NBR (Nitrile) seals (**standard**)
V	=	FKM (Viton) seals (special seals - please contact BUCHER)
1 ... 9	=	design stage (omit when ordering new units)
...	=	voltage e.g. **24** (24 V)
D	=	current DC
(blank)	=	DIN EN 175301-803 connection with mating plug (**standard, IP 65**)
M100	=	DIN EN 175301-803 connection without mating plug
C	=	Kostal plug connection (IP 65)
JT	=	Junior Timer radial plug connection (with protection diode, IP65)
IT	=	Junior Timer axial plug connection (with protection diode, IP65)
D	=	Deutsch plug connection 45° DT04-2P (IP67/69K)
DT	=	Deutsch plug connection 45° DT04-2P (with protection diode, IP67/69K)
S	=	AMP Superseal 1.5 (IP67) / Metri-Pack 150 (IP65) plug connection
F	=	flying leads (500 mm)

mating plug not supplied

9 Related data sheets

Reference	(Old no.)	Description
400-P-040011	(i-32)	The form-tool hire programme
400-P-040171		Cavity type AL
400-P-040401		Cavity type BH/C0820
520-P-000110		Cavity type C0820
400-P-120110	(W-2.141)	Coils for screw-in cartridge valves
400-P-510101		Amplifier unit for proportional valves (1-channel) PBS - 3A
400-P-720101		Line-mounting body, type GALA (G 3/8")
520-P-000111		Line-mounting body, size SAE 08 (G 3/8")
400-P-010101		$MTTF_D$ values for hydraulic valves

info.ch@bucherhydraulics.com www.bucherhydraulics.com

© 2020 by Bucher Hydraulics AG Frutigen, CH-3714 Frutigen
All rights reserved.
Data is provided for the purpose of product description only, and must not be construed as warranted characteristics in the legal sense. The information does not relieve users from the duty of conducting their own evaluations and tests. Because the products are subject to continual improvement, we reserve the right to amend the product specifications contained in this catalogue.

Classification: 430.310.325.305.310.310

Proportional Throttle Cartridges, Size 10

Q_{max} = 140 l/min, p_{max} = 250 bar, Q_N = 55 l/min at Δp 10 bar
Two-Stage, with Seat-Valve Shut-Off
Series MVRPSBB-HG…

- Normally closed
- Seat-valve shut-off from 2 → 1
- Compact construction for cavity type DH to ISO 7789-27-01-0-07
- More reliable operation over the whole pressure and flow range (high pressure differences)
- Low headloss
- All exposed parts with zinc-nickel plating
- High pressure wet-armature solenoids
- The slip-on coil can be rotated, and it can be replaced without opening the hydraulic envelope
- Various plug-connector systems and voltages are available
- Can be fitted in a line-mounting body

1 Description

Series MVRPSB… two-stage proportional throttle cartridges are size 10, high performance screw-in valves with an M27 x 2 mounting thread. Both the main and pilot stages are designed on the poppet/seat principle and the 2 → 1 flow path is therefore virtually leak-free. With these proportional throttle cartridges, the flow rate from 2 → 1 is dependent on the control current, and it can be varied continuously and set at any desired level. When used with a pressure compensator, these cartridges are particularly suitable for precise and load-compensated lifting and lowering movements, but they can also be used on their own for reliable operation in mobile and industrial applications with large pressure differences. All external parts of the cartridge are zinc-nickel plated according to DIN EN ISO 19 598 and are thus suitable for use in the harshest operating environments. The slip-on coils can be replaced without opening the hydraulic envelope and can be positioned at any angle through 360°. For self-assembly, please refer to the section related data sheets.

2 Symbol

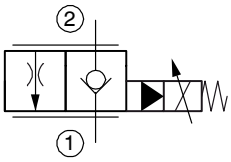

3 Technical data

General characteristics	Description, value, unit
Designation	proportional-throttle cartridge
Design	seat-valve shut-off, two stage
Mounting method	screw-in cartridge M27 x 2
Tightening torque	100 Nm ± 10 %
Size	nominal size 10 mm, cavity type DH
Weight	0.56 kg
Mounting attitude	unrestricted (preferably vertical, coil down)

WWW.SUMY.IR

General characteristics	Description, value, unit
Ambient temperature range	-25 °C … +50 °C
$MTTF_D$ values	150 years, see data sheet 400-P-010101-en

Hydraulic characteristics	Description, value, unit
Maximum operating pressure	250 bar
Maximum flow rate	140 l/min
Nominal flow rate	55 l/min at Δp = 10 bar
	< 0,2 cm^3/min (max. 5 drops/min) with oil viscosity 33 mm^2/s (cSt)
Flow direction	2 → 1 throttle function, see symbols 1 → 2 free flow
Hydraulic fluid	HL and HLP mineral oil to DIN 51 524; for other fluids, please contact BUCHER
Hydraulic fluid temperature range	-25 °C … +70 °C
Viscosity range	15…380 mm^2/s (cSt), recommended 20...130 mm^2/s (cSt)
Minimum fluid cleanliness Cleanliness class to ISO 4406 : 1999	class 18/16/13

Electrical characteristics	Description, value, unit
Supply voltage	12 V DC, 24 V DC
Control current	12 V = 0…1400 mA, 24 V = 0…700 mA
Coil resistance R - cold value at 20 °C - max. warm value	12 V = 5.8 Ω / 24 V = 20.9 Ω 12 V = 8.6 Ω / 24 V = 32 Ω
Recommended PWM frequency (dither)	200 Hz
Hysteresis with PWM	2…4 % I_N
Reversal error with PWM	2…4 % I_N
Sensitivity with PWM	< 1 % I_N
Reproducibility with PWM	< 2 % p_N
Switching time	see performance graph
Relative duty cycle	100 %
Protection class to ISO 20 653 / EN 60 529	IP 65 / IP 67 / IP 69K, see “Ordering code” (with appropriate mating connector and proper fitting and sealing)
Electrical connection	DIN EN 175301-803, 3-pin 2 P+E (standard) for other connectors, see “Ordering code”

4 Performance graphs

Δp = f (Q) Pressure drop - Flow rate characteristic
[2 → 1]

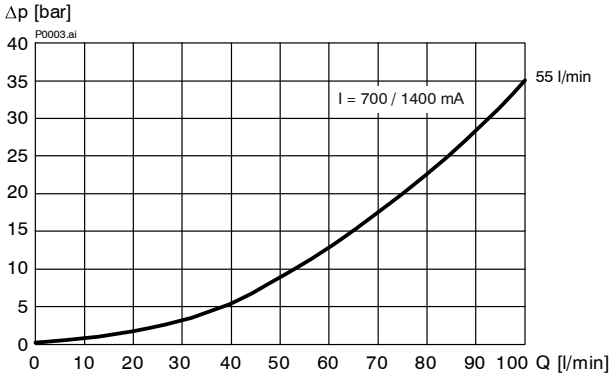

Δp = f (Q) Pressure drop - Flow rate characteristic
[1 → 2]

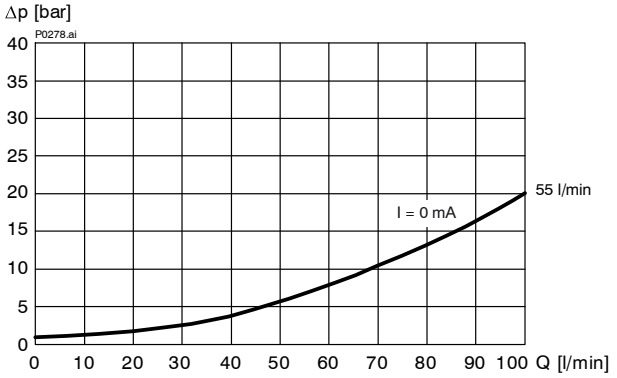

Attention:
where there are large pressure differences in the flow direction 1 → 2, the main stage poppet will become damaged.

Q = f (Δp; I) Flow rate adjustment characteristic

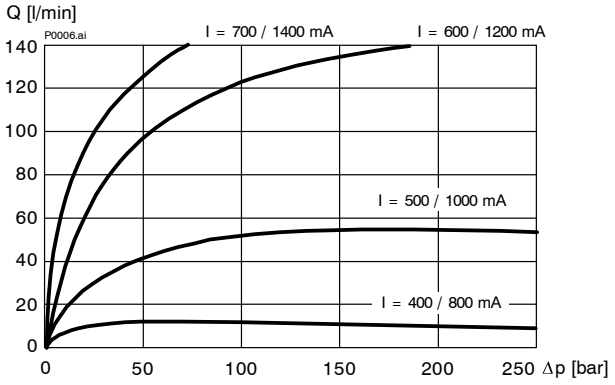

Q = f (I; Δp) Flow rate adjustment characteristic

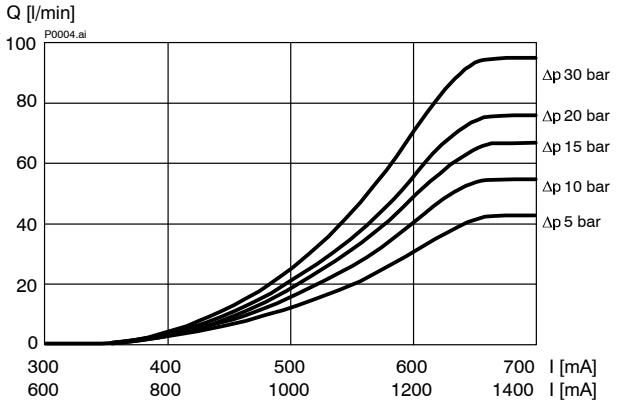

t = f (I; Δp) Switching time characteristic **Opening**
at Δp = 10 … 50 bar

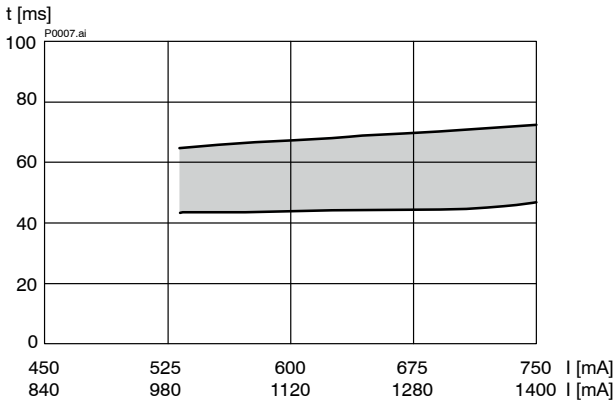

t = f (I; Δp) Switching time characteristic **Closing**
at Δp = 10 … 50 bar

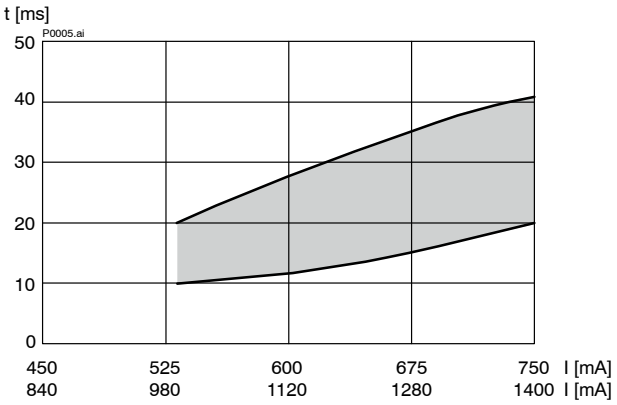

5 Dimensions & sectional view

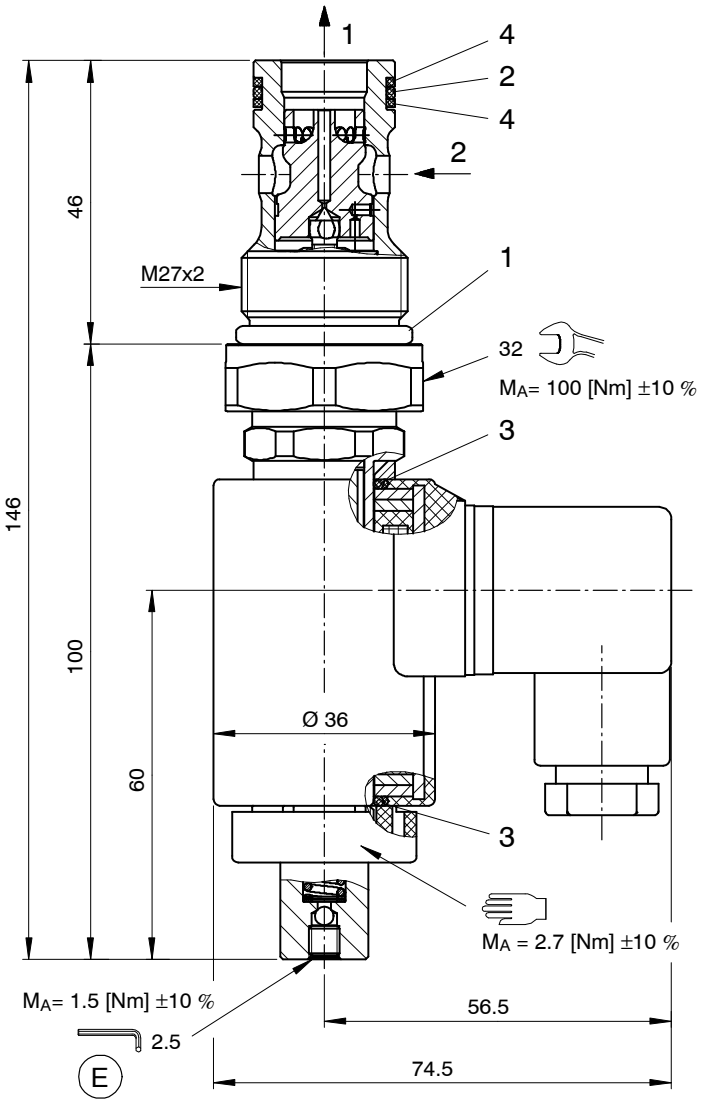

6 Application examples

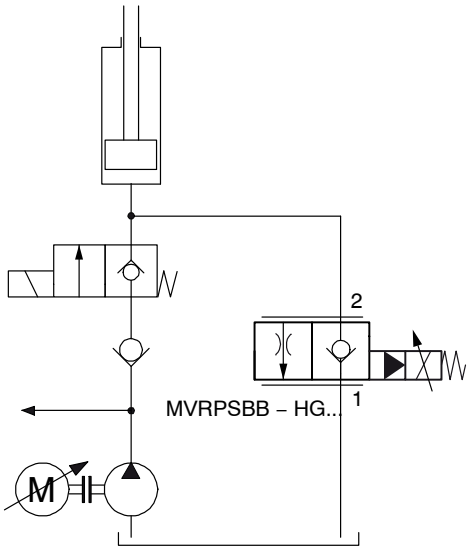

7 Installation information

IMPORTANT!

To achieve the maximum performance rating, fit the solenoid coil as shown (with the plug pins at the bottom) and install the valve in a steel body. When fitting the cartridges, note the mounting attitude (preferably vertical, with coil down → automatic air bleed) and use the specified tightening torque. No adjustments are necessary, since the cartridges are set in the factory.

ATTENTION!

Only qualified personnel with mechanical skills may carry out any maintenance work. Generally, the only work that should ever be undertaken is to check, and possibly replace, the seals. When changing seals, oil or grease the new seals thoroughly before fitting them.

Seal kit NBR no. DS-368-N [1)]

Item	Qty.	Description			
1	1	O-ring	no. 119	∅ 23.47 x 2.62	N90
2	1	O-ring	no. 018	∅ 18.77 x 1.78	N90
3	2	O-ring		∅ 16.00 x 2.00	FKM
4	2	Backup ring		∅ 18.00 x 1.40 x 1.40	FI0751

IMPORTANT!

1) Seal kit with FKM (Viton) seals, no. DS-368-V

8 Ordering code

Ex. MV R P S B B - H G - 10 - 55 _ - 1 24 D

MV	=	throttle valve, two stage
R	=	proportional-solenoid operated
P	=	cartridge design
S	=	seat-valve design
B	=	pressurized oil enters at 2
A ... Q	=	standard model - see relevant data sheets
Z ... R	=	special features - please consult BUCHER
H	=	cavity type DH
G	=	normally closed
10	=	nominal size 10 mm
55	=	nominal flow rate 55 l/min at $\Delta p \geq 10$ bar
(blank)	=	NBR (nitril-butadien-rubber / BUNA) seals (standard)
V	=	FKM (fluorocarbon rubber / VITON) seals (special seals - please contact BUCHER)
1 ... 9	=	design stage (omit when ordering)
...	=	voltage e.g. 24 (24 V)
D	=	current DC
(blank)	=	DIN EN 175301-803 connection, 3-pole 2 P+E with mating plug, IP 65 (standard)
M100	=	DIN EN 175301-803 connection, 3-pole 2 P+E
C	=	Kostal plug connection (IP 65)
JT	=	Junior Timer radial plug connection (with protection diode, IP65)
IT	=	Junior Timer axial plug connection (with protection diode, IP65)
D	=	Deutsch plug connection DT04-2P (IP 67/69K)
DT	=	Deutsch plug connection DT04-2P (with protection diode, IP 67/69K)
S	=	AMP Superseal 1.5 (IP 67) / Metri-Pack 150 (IP 65)
F	=	flying leads (500 mm)

mating plug not supplied

9 Related data sheets

Reference	(Old no.)	Description
400-P-040011	(i-32)	The form-tool hire programme
400-P-060171		Cavity type DH to ISO 7789-27-01-0-07
400-P-120110	(W-2.141)	Coils for screw-in cartridge valves
400-P-510101		Amplifier unit for proportional valves (1-channel) PBS - 3A
400-P-740161		Line-mounting body, type GCDHA (G 3/4")
400-P-010101		$MTTF_D$ values for hydraulic valves

info.ch@bucherhydraulics.com www.bucherhydraulics.com

© 2022 by Bucher Hydraulics AG Frutigen, CH-3714 Frutigen
All rights reserved.
Data is provided for the purpose of product description only, and must not be construed as warranted characteristics in the legal sense. The information does not relieve users from the duty of conducting their own evaluations and tests. Because the products are subject to continual improvement, we reserve the right to amend the product specifications contained in this catalogue.

Classification: 430.310.325.305.320.310

Proportional Throttle Cartridges, Size 16

Q_{max} = 250 l/min, p_{max} = 250 bar, $Q_{N\ max}$ = 140 l/min at Δp 10 bar
Two-Stage, with Seat-Valve Shut-Off
Series MVRPSBB-RG…

- Normally closed
- Seat-valve shut-off from 2 → 1
- Compact construction for cavity type ER to ISO 7789-33-01-0-07
- 3 nominal flow ranges
- More reliable operation over the whole pressure and flow range (high pressure differences)
- Low headloss
- All exposed parts with zinc-nickel plating
- High pressure wet-armature solenoids
- The slip-on coil can be rotated, and it can be replaced without opening the hydraulic envelope
- Various plug-connector systems and voltages are available
- Can be fitted in a line-mounting body

1 Description

Series MVRPSBB… two-stage proportional throttle cartridges are size 16, high performance screw-in valves with an M33 x 2 mounting thread. Both the main and pilot stages are designed on the poppet/seat principle and the 2 → 1 flow path is therefore virtually leak-free. With these proportional throttle cartridges, the flow rate from 2 → 1 is dependent on the control current, and it can be varied continuously and set at any desired level. The throttle cartridges are available in 3 nominal flow ranges. When used with a pressure compensator, these cartridges are particularly suitable for precise and load-compensated lifting and lowering movements, but they can also be used on their own for reliable operation in mobile and industrial applications with large pressure differences. All external parts of the cartridge are zinc-nickel plated according to DIN EN ISO 19 598 and are thus suitable for use in the harshest operating environments. The slip-on coils can be replaced without opening the hydraulic envelope and can be positioned at any angle through 360°. For self-assembly, please refer to the section related data sheets.

2 Symbol

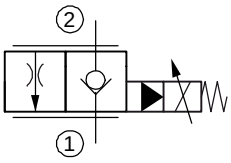

3 Technical data

General characteristics	Description, value, unit
Designation	proportional-throttle cartridge
Design	seat-valve shut-off, two stage
Mounting method	screw-in cartridge M33 x 2
Tightening torque	150 Nm ± 10 %
Size	nominal size 16 mm, cavity type ER
Weight	0.95 kg
Mounting attitude	unrestricted (preferably vertical, coil down)

WWW.SUMY.IR

General characteristics	Description, value, unit
Ambient temperature range	-25 °C … +60 °C
$MTTF_D$ values	150 years, see data sheet 400-P-010101-en

Hydraulic characteristics	Description, value, unit
Maximum operating pressure	250 bar
Maximum flow rate	250 l/min
Nominal flow rate	60, 90, 140 l/min at Δp = 10 bar
	< 0,2 cm^3/min (max. 5 drops/min) with oil viscosity 33 mm^2/s (cSt)
Flow direction	2 → 1 throttle function, see symbols 1 → 2 free flow
Hydraulic fluid	HL and HLP mineral oil to DIN 51 524; for other fluids, please contact BUCHER
Hydraulic fluid temperature range	-25 °C … +70 °C
Viscosity range	15…380 mm^2/s (cSt), recommended 20...130 mm^2/s (cSt)
Minimum fluid cleanliness Cleanliness class to ISO 4406 : 1999	class 18/16/13

Electrical characteristics	Description, value, unit
Supply voltage	12 V DC, 24 V DC
Control current	12 V = 0…2300 mA, 24 V = 0…1160 mA
Coil resistance R - cold value at 20 °C - max. warm value	12 V = 2.64 Ω / 24 V = 10.10 Ω 12 V = 4.00 Ω / 24 V = 15.20 Ω
Recommended PWM frequency (dither)	200 Hz
Hysteresis with PWM	2…4 % I_N
Reversal error with PWM	2…4 % I_N
Sensitivity with PWM	< 1 % I_N
Reproducibility with PWM	< 2 % p_N
Switching time	see performance graph
Relative duty cycle	100 %
Protection class to ISO 20 653 / EN 60 529	IP 65 / IP 67 / IP 69K, see “Ordering code” (with appropriate mating connector and proper fitting and sealing)
Electrical connection	DIN EN 175301-803, 3-pin 2 P+E (standard) for other connectors, see “Ordering code”

4 Performance graphs measured with oil viscosity 33 mm²/s (cSt)

Q = f (Δp; I) Flow rate adjustment characteristic [„140“]

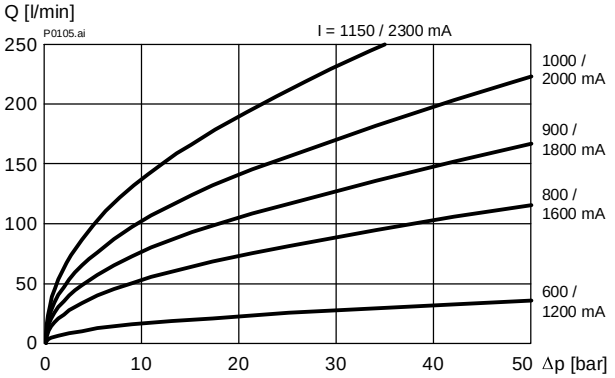

Q = f (I; Δp) Flow rate adjustment characteristic [„140“]

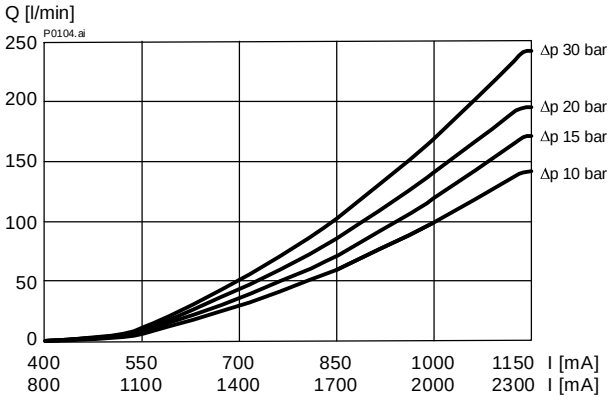

Q = f (Δp; I) Flow rate adjustment characteristic [„90“]

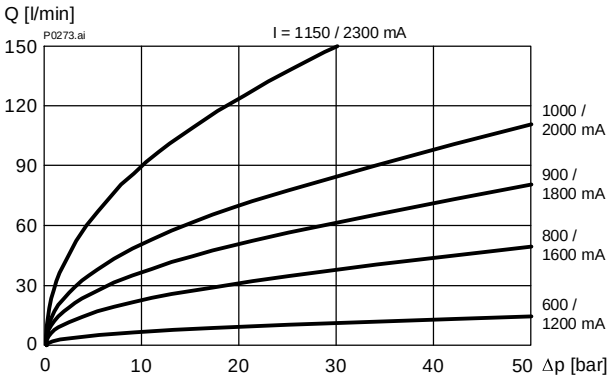

Q = f (I; Δp) Flow rate adjustment characteristic [„90“]

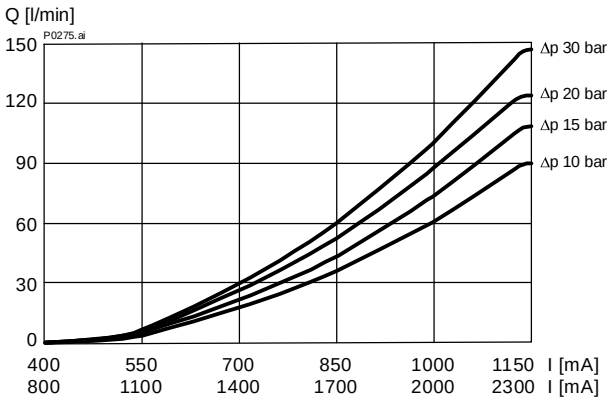

Q = f (Δp; I) Flow rate adjustment characteristic [„60“]

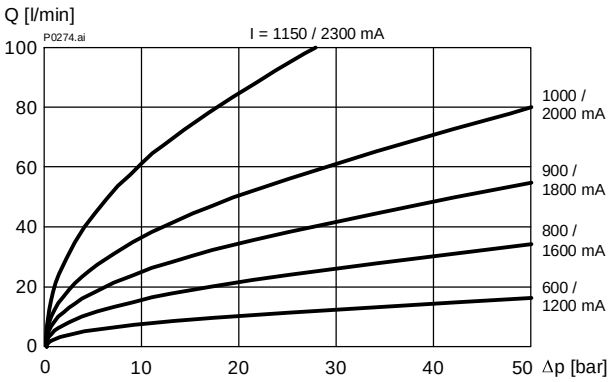

Q = f (I; Δp) Flow rate adjustment characteristic [„60“]

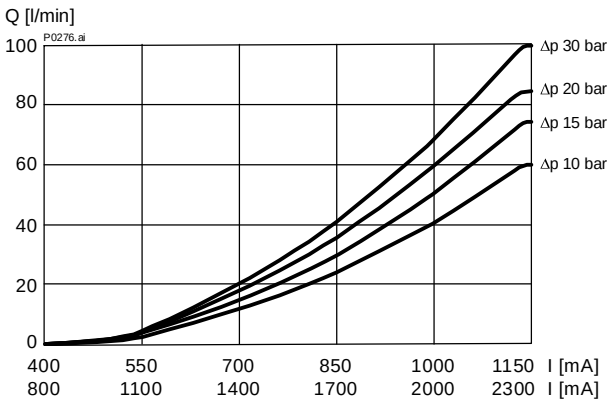

Δp = f (Q) Pressure drop - Flow rate characteristic
[2 → 1]

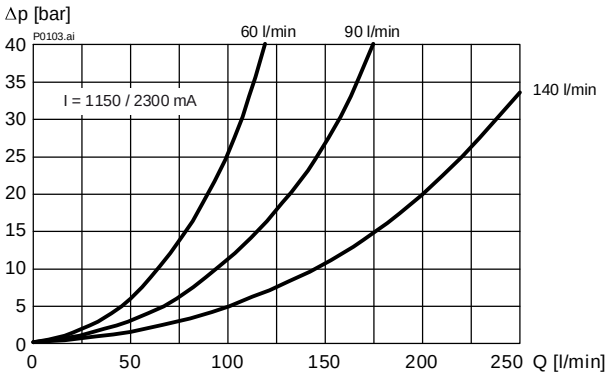

Δp = f (Q) Pressure drop - Flow rate characteristic
[1 → 2]

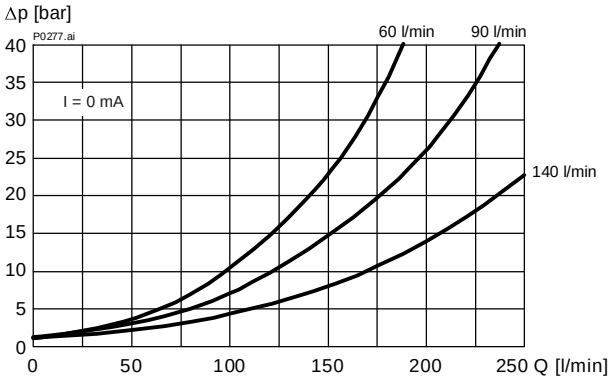

Attention:
where there are large pressure differences in the flow direction 1 → 2, the main stage poppet will become damaged.

t = f (I; Δp) Switching time characteristic **Opening**
at Δp = 10 … 50 bar

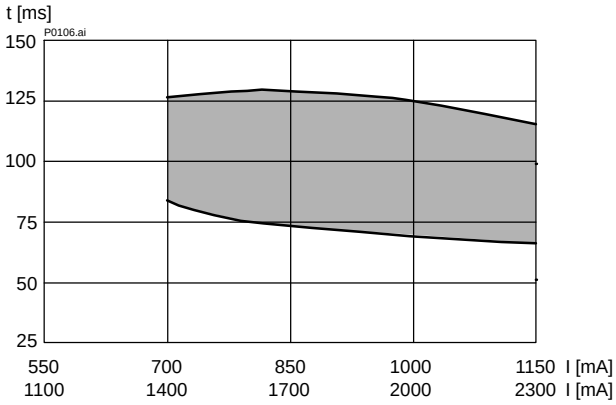

t = f (I; Δp) Switching time characteristic **Closing**
at Δp = 10 … 50 bar

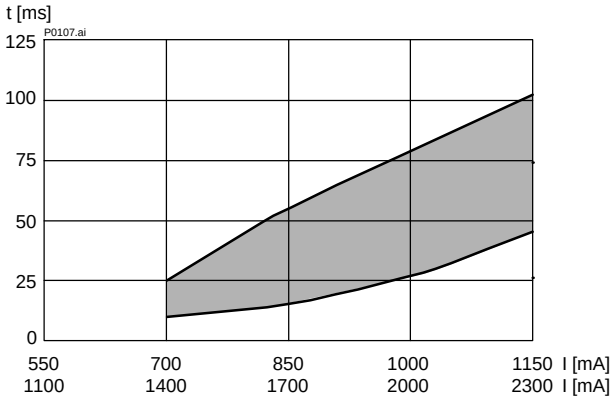

5 Dimensions & sectional view

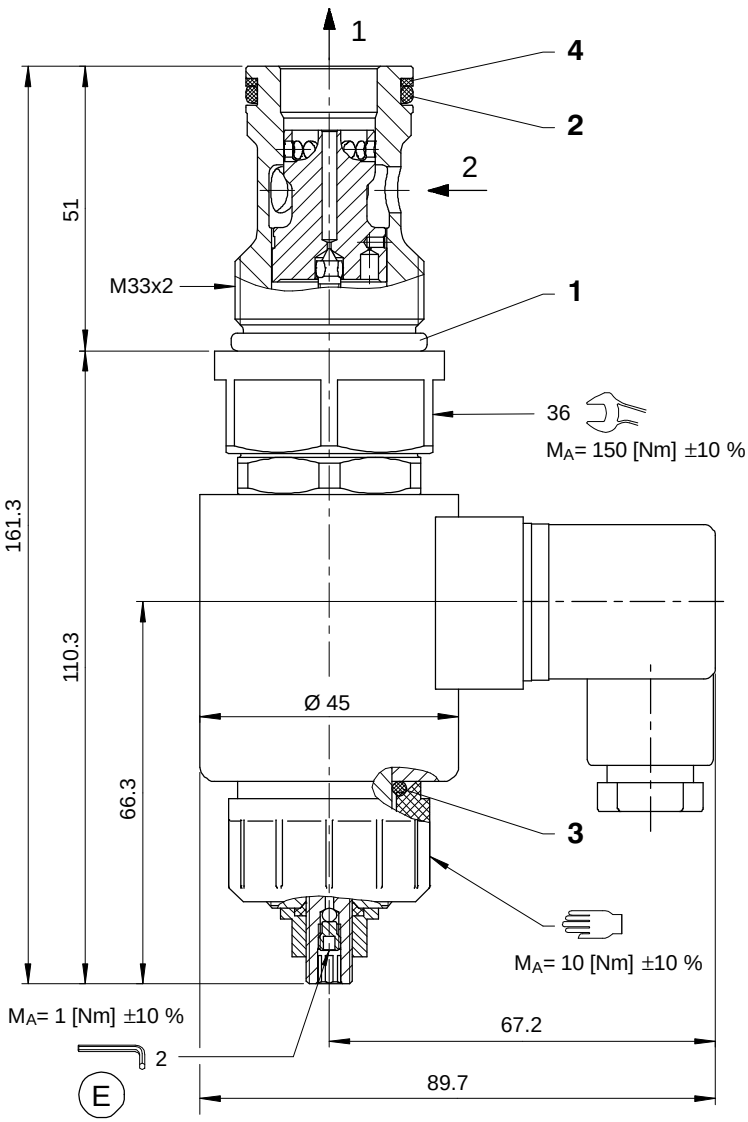

6 Application examples

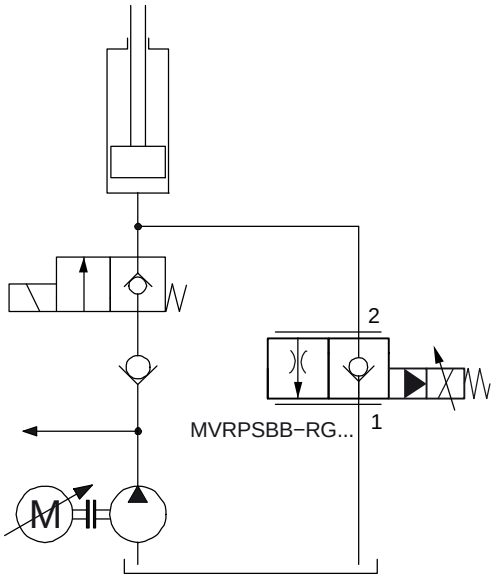

7 Installation information

IMPORTANT!

To achieve the maximum performance rating, fit the solenoid coil as shown (with the plug pins at the bottom) and install the valve in a steel body. When fitting the cartridges, note the mounting attitude (preferably vertical, with coil down → automatic air bleed) and use the specified tightening torque. No adjustments are necessary, since the cartridges are set in the factory.

ATTENTION!

Only qualified personnel with mechanical skills may carry out any maintenance work. Generally, the only work that should ever be undertaken is to check, and possibly replace, the seals. When changing seals, oil or grease the new seals thoroughly before fitting them.

Seal kit NBR no. DS-377-N [1)]

Item	Qty.	Description
1	1	O-ring no. 123 ∅ 29.82 x 2.62 N90
2	1	O-ring no. 119 ∅ 23.47 x 2.62 N90
3	1	O-ring no. 118 ∅ 21.89 x 2.62 FKM
4	1	Backup ring ∅ 22.50 x 2.00 x 1.40 FI0751

IMPORTANT!

1) Seal kit with FKM (Viton) seals, no. DS-377-V

8 Ordering code

MV R P S B B - R G - 16 - 140 N - 2 24 D _ _

M V	=	throttle valve, two-stage
R	=	proportional-solenoid operated
P	=	cartridge design
S	=	seat-valve design
B	=	pressurised oil enters at 2
A ... Q	=	standard model - see relevant data sheets
Z ... R	=	special features - please consult BUCHER
R	=	cavity type ER to ISO 7789-33-01-0-07
G	=	normally closed
16	=	nominal size 16 mm
140	=	nominal flow rate 140 l/min at Δp = 10 bar
90	=	nominal flow rate 90 l/min at Δp = 10 bar
60	=	nominal flow rate 60 l/min at Δp = 10 bar
N	=	NBR (Nitrile) seals **(standard)**
V	=	FKM (Viton) seals (special seals - please contact BUCHER)
1 ... 9	=	design stage (omit when ordering new units)
...	=	voltage e.g. **24** (24 V)
D	=	current DC
G	=	**standard** plug connection to DIN EN (3-pole, 2 P+E) (IP 65) *for the following plug-variants, please consult Bucher:*
T	=	Deutsch plug connection DT04-2P (IP 67/69K)
I	=	Junior Timer axial plug connection (IP 65)
A	=	AMPSEAL axial plug connection (IP 67/69K)
without	=	connection without mating plug
Q	=	only connection “G“ with mating plug

mating plug not supplied

9 Related data sheets

Reference	(Old no.)	Description
400-P-040011	(i-32)	The form-tool hire programme
400-P-080131		Cavity type ER to ISO 7789-33-01-0-07
400-P-120130		Coils for Solenoid Valves, Series D45/22…
400-P-510101		Amplifier unit for proportional valves (1-channel) PBS - 3A
400-P-750121		Line-mounting body, type GERA (G 3/4”)
400-P-010101		$MTTF_D$ values for hydraulic valves

info.ch@bucherhydraulics.com www.bucherhydraulics.com

© 2026 by Bucher Hydraulics AG Frutigen, CH-3714 Frutigen
All rights reserved.
Data is provided for the purpose of product description only, and must not be construed as warranted characteristics in the legal sense. The information does not relieve users from the duty of conducting their own evaluations and tests. Because the products are subject to continual improvement, we reserve the right to amend the product specifications contained in this catalogue.

Classification: 430.310.325.305.330.310

BUCHER hydraulics

WWW.SUMY.IR

Flow valve
Throttle check valve

Q_{max} = 50 l/min, p_{max} = 250 bar
Pilot operated, poppet type, proportional solenoid
Type series: MDRSV_P2G-5H-...A...

- Screw-in cartridge valve for cavity BH/C0820
- All external parts with zinc-nickel plating according to DIN EN ISO 19598
- Reliable operation over the whole pressure and flow range (even with high pressure differentials)
- Can be used with inline or bypass pressure compensator cartridges
- Fine opening in the lower volume range
- Low head loss
- With or without manual override
- The slip-on coil can be rotated, and it can be replaced without opening the hydraulic envelope
- Various plug-connector systems and voltages are available

Symbol

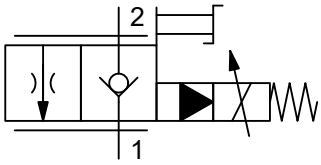

with manual override

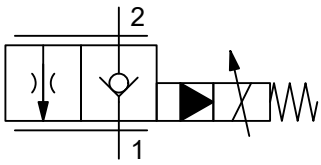

without manual override

Description

The two-stage proportional throttle valve is a high-performance threaded screw-in cartridge valve in size 05 / SAE 08. Both the main and pilot stages are designed on the poppet/seat principle and the 2 to 1 flow path is therefore virtually leak-free. When de-energized, the valve permits flow from 1 to 2 after the spring preload is overcome. The required flow rate from 2 to 1 is set as a function of the electrical control current and can be continuously varied. The valve is predominantly used in mobile applications where leak-tight shut-off functions are crucially important. Particularly suitable in combination with a pressure compensator, the valve provides precise and load-compensated lifting and lowering movements for reliable operation with large pressure differences. The solenoid coil with the required connector type is not included and must be ordered separately (see "Related data sheets"). The slip-on coil can be replaced without opening the hydraulic circuit and can be positioned at any angle through 360°.

Technical data

General characteristics	Description, value, unit
Function group	flow valve
Function	throttle check valve
Design	screw-in cartridge valve
Controls	proportional solenoid
Characteristic	pilot operated, poppet type
MTTFd value	150 years
Construction size	NG 05 / SAE 08
Thread size	3/4-16 UNF-2A
Mounting attitude	unrestricted (preferably vertical, coil down)
Weight	0.30 kg
Cavity acc. factory standard	BH/C0820
Tightening torque steel	40 Nm
Tightening torque aluminium	40 Nm
Tightening torque tolerance	± 10 %
Minimum ambient temperature	- 30 °C
Maximum ambient temperature	+ 90 °C
Surface protection	all external parts with zinc-nickel plating according to DIN EN ISO 19598
Sealing material	see ordering code
Seal kit order number	NBR: DS-448-N / FKM: DS-448-V

NOTE!
MTTfd value only applies to variants with filter screen. (F2)

Hydraulic characteristics	Description, value, unit
Maximum operating pressure	250 bar
Maximum flow rate	50 l/min
Flow direction	see symbol
Hydraulic fluid	HL and HLP mineral oil according to DIN 51 524; other fluids on request!
Minimum fluid temperature	- 30 °C
Maximum fluid temperature	+ 80 °C
Viscosity range	15 ... 380 mm^2/s (cSt)
Recommended viscosity range	20 ... 130 mm^2/s (cSt)
Minimum fluid cleanliness (cleanliness class according to ISO 4406:1999)	without filter: class 18/16/13 with filter: 20/18/14
Maximum permissible particle size	0.35 mm
Internal leakage flow rate	< 0.2cm^3/min (max. 5 drops/min) at oil viscosity 33mm^2/s (cSt)

Electric characteristics	Description, value, unit
Actuator type	solenoid coil
Solenoid coils type	D37-161
Supply voltage DC	12/24 V DC
Control current	12 V = 0...1400 mA / 24 V = 0...700 mA
Nominal power consumption	26 W
Relative duty cycle	100 %
Recommended PWM frequency	120 Hz
Response sensitivity with PWM	< 2 % I_{max}
Reproducibility with PWM	< 3 Q_{nenn}
Hysterese with PWM	3...7 % I_{max}
Reversal error with PWM	3...7 % I_{max}

Performance graphs

measured with oil viscosity 33.0 mm²/s (cSt)

Δp = f (Q) Pressure drop-flow rate characteristic

Without filter screen

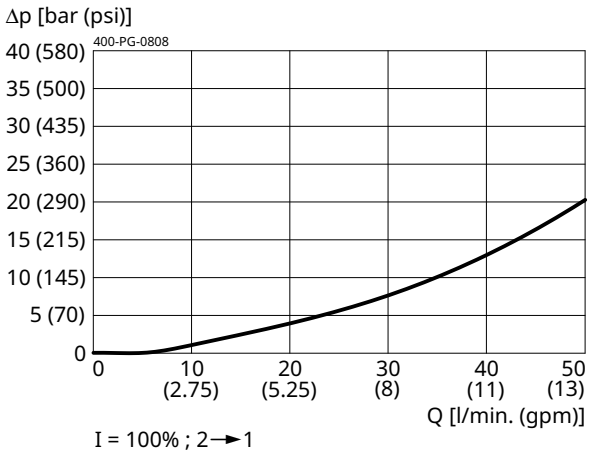

Δp = f (Q) Pressure drop-flow rate characteristic

Without filter screen

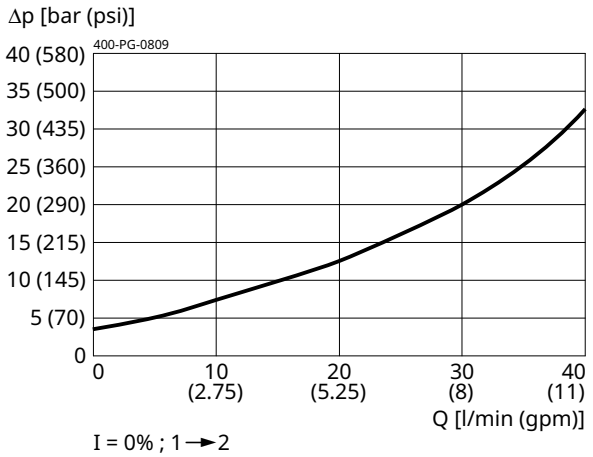

Q = f (Δp:I) Flow rate adjustment

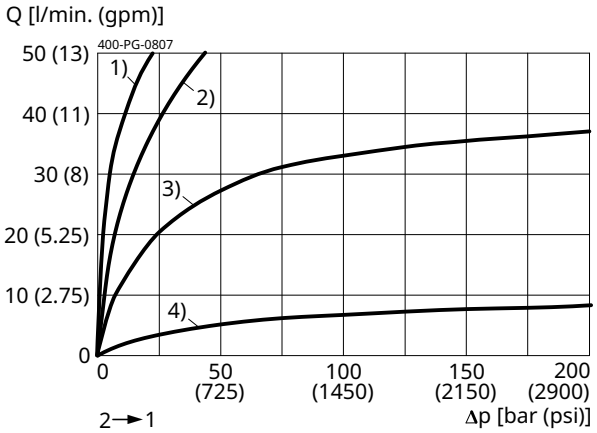

2→1
1) I = 100%
2) I = 80%
3) I = 60%
4) I = 40%

Q = f (I:Δp) Flow rate adjustment

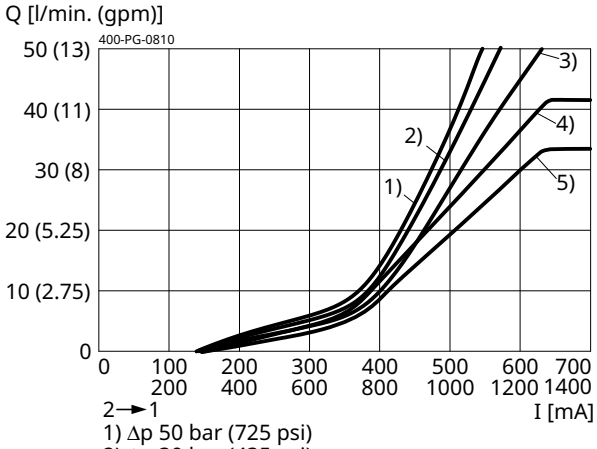

2→1
1) Δp 50 bar (725 psi)
2) Δp 30 bar (435 psi)
3) Δp 20 bar (290 psi)
4) Δp 15 bar (215 psi)
5) Δp 10 bar (145 psi)

$DC_{max}/U(I_{max})$ = f (T amb) Duty cycle solenoid coil

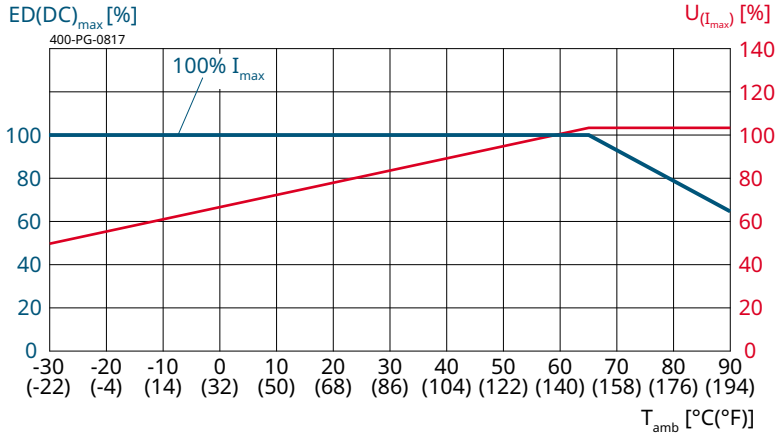

Installation

Beispiel für die Masseinheit:
Example for the dimensional units:
尺寸单位示例:

0.79	= 0.79 mm	millimeter
(.031)	= 0.031"	inch

Handnotbetätigung schraubbar "H"
manual override, screw-on "H"
带手动应急（H型手动）

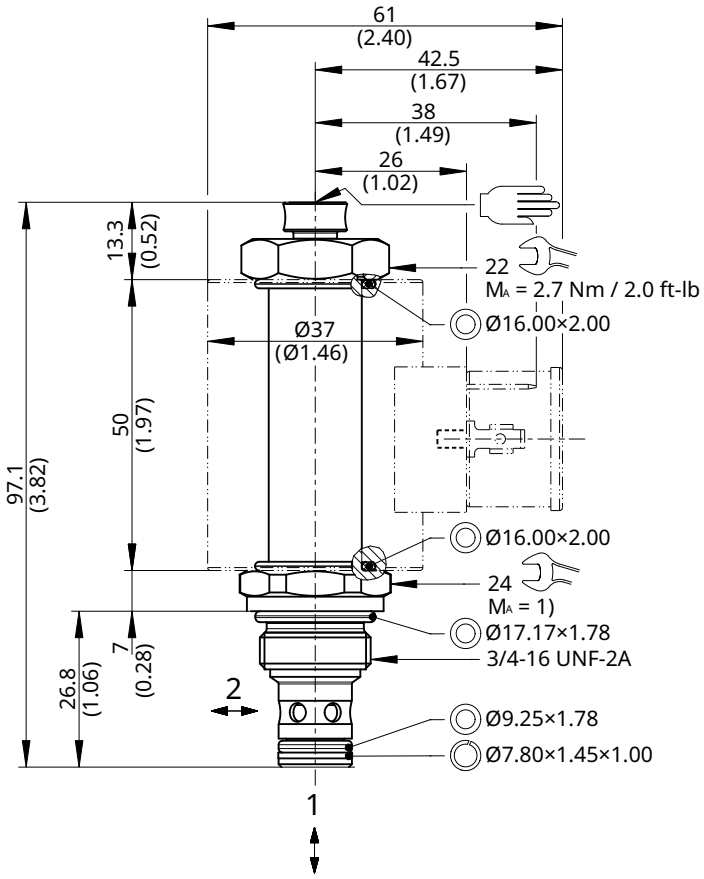

Handnotbetätigung rastbar "R"
manual override, locking "R"
带手动应急锁定（R型手动）

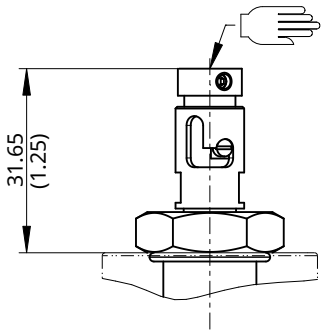

Ohne Handnotbetätigung "O"
without manual override "O"
不带手动应急“O"

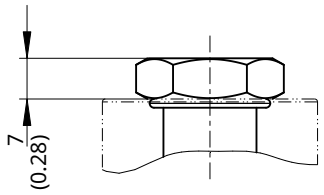

WWW.SUMY.IR

NOTE!
1) When fitting the valves, use the specified tightening torque (see "Technical Data").

ATTENTION!
Only qualified personnel with mechanical skills may carry out any maintenance work on the valve. The qualified personnel may only replace or inspect the seals. New seals must always be oiled or greased before installation.

Additional symbols

MDRSVGP2G-5H-42-O-R-...

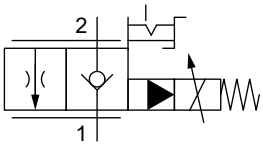

MDRSVGP2G-5H-42-F2-H-...

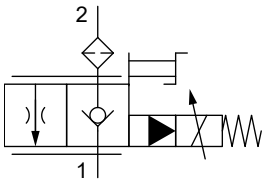

MDRSVGP2G-5H-42-F2-R-...

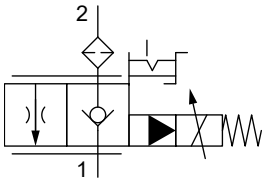

MDRSVGP2G-5H-42-F2-O-...

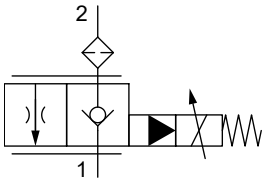

Filter option

The pressure drop of the filter amounts to an additional approx. 2.5 bar (35 psi) at 50 l/min (13 gpm).

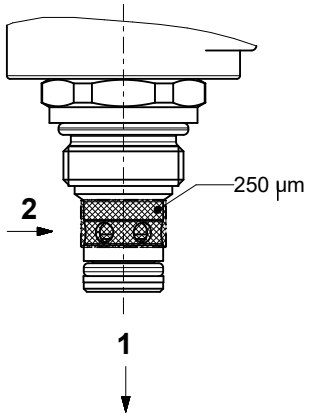

Ordering code

Ex. M D R S V G P 2 G - 5 H - 42 - O - H - N A 1

M	=	flow-regulating valve
D	=	throttle valve
R	=	check valve function
S	=	seat valve
V	=	pilot operated
G	=	electrically operated, COIL D37-161-50..., 26 W
P	=	proportional
2	=	2-way function
G	=	de-energized closed
5	=	nominal size 5 / SAE 8
H	=	cavity type BH/C0820
42	=	nominal flow rate = 42 l/min. at Δp = 15 bar
O	=	without filter screen **(standard)**
F2	=	with filter screen in port 2
O	=	without manual override
H	=	manual override, screw on **(standard)**
R	=	manual override, lockable
N	=	NBR (nitrile butadiene rubber / BUNA) seals **(standard)**
V	=	FKM (fluorocarbon rubber / VITON) seals (special seals on request)
A ... Q	=	standard model according to valid data sheet
1 ... 9	=	technical design no. (omit when ordering)

IMPORTANT!
The solenoid coil with the required connector type is not included and must be ordered separately (see "Related data sheets").

Related data sheets

Reference	Description
400-P-040011	form tools
400-P-040401	cavity BH/C0820
400-P-120150	solenoid coil COIL D37-161...
400-P-738571	threaded port body GBH-38...
400-P-010101	MTTFd Values for Hydraulic Valves

info.ch@bucherhydraulics.com **www.bucherhydraulics.com**

© 2026 by Bucher Hydraulics AG Frutigen, 3714 Frutigen, Switzerland

All rights reserved.
Data is provided for the purpose of product description only, and must not be construed as warranted characteristics in the legal sense. The information does not relieve users from the duty of conducting their own evaluations and tests. Because the products are subject to continual improvement, we reserve the right to amend the product specifications contained in this catalogue.

BUCHER hydraulics
WWW.SUMY.IR

M - 19 A

Stacking Flow Regulation, 6 mm

Series SD ...

60 l/min, 315 bar

- Sliding-spool design
- Screwdriver adjustment
- Final OPEN/CLOSED positions determined by positive end-stops
- Mounting interface to ISO 4401 CETOP RP35H size 3, NFPA D03, DIN 24 340 A6

MASSBILD

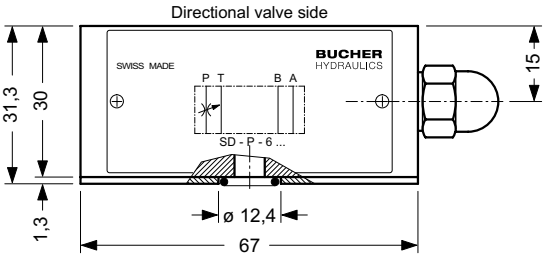

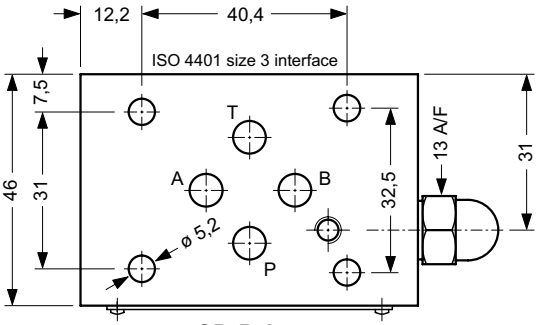

SD-P-6 ...

Turning model SD-P.. upside down about its long axis produces the SD-T.. function and vice versa

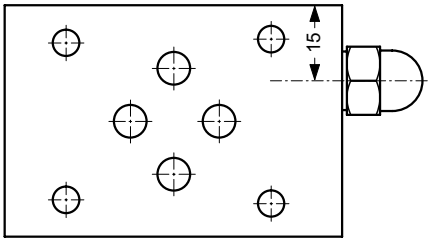

SD-T-6 ...

SYMBOLS

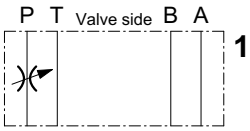

SD - P - 6 ...

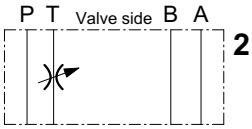

SD - T - 6 ...

DESCRIPTION

The valve throttles or completely stops flow for either direction.
To access the screwdriver adjustment, remove the dome nut item 7 (13 A/F).
Positive stops govern the end positions.
Sealing is by the use of a seal plate and 4 O-rings.

SCHEMATIC SECTION

showing the relevant ports

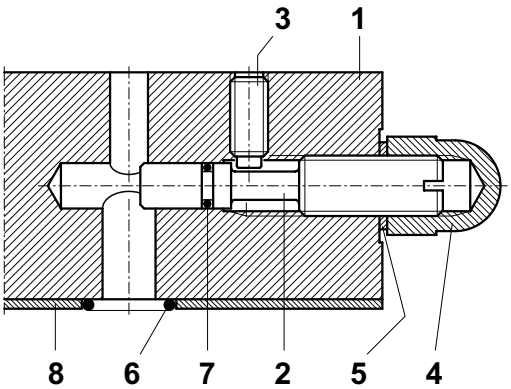

COMPONENTS / SERVICE PARTS

*) = part of seal kit no. DS-111
◢ = available as service part

It.	Qty.	Description		
1	1	Stacking body	30 x 46 x 67	type R-6
2 ◢	1	Throttling screw	M8 x 40	
3	1	Grub screw	M5 x 12	DIN 915
4 ◢	1	Dome nut	M8	DIN 1587
◢	1	Seal kit no. DS-111, comprising *):		
5	1*)	Copper-ring	ø 8 / 11,5 x 1	
6	4*)	O-ring no. 012	ø 9,25 x 1,78	N90
7	1*)	O-ring	ø 4 x 1	N90
8 ◢	1	Seal plate	46 x 67 x 1,3	type DB-6

TO ORDER SERVICE PARTS, STATE:
- complete unit model code from the nameplate including the design number
- data sheet number, including issue date
- part item number from above list
- part description from above list
- quantity required

INSTALLATION AND SERVICING

MUST BE CARRIED OUT WITH CARE, AND BY QUALIFIED PERSONNEL ONLY At Installation, be sure to mount the valve with the correct faces contacting the adjacent units and with all interface connections lining up properly.

When changing seals, the new seals should by thoroughly oiled or greased before they are fitted.

MAIN CHARACTERISTICS

Type	Throttle valve
Design	variable gap
Mounting method	stack mounting
Size	ISO 4401 size 3 interface
Mass	0,80 kg
Mounting attitude	unrestricted
Flow direction	see symbols
Operating pressure	... 315 bar
Fluids	hydraulic oils HL and HLP to DIN 51 524 other fluids - contact BHFRU
Min. fluid cleanliness	18/14 to ISO 4406 / CETOP RP70H 8 ... 9 to NAS 1638
Fluid temperature range	-20°C ... +60°C
Viscosity range	10 ... 500 cSt
Flow rate Q max.	60 l/min

PERFORMANCE DATA

Oil viscosity 33 cSt

Δp - Q characteristics

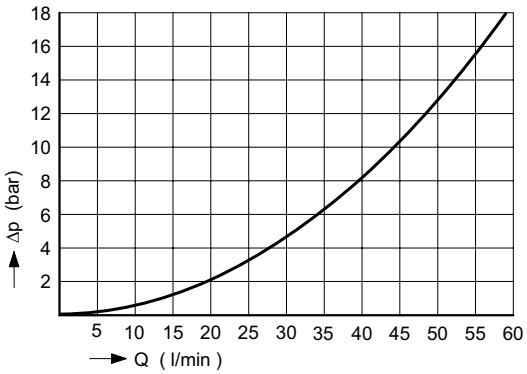

MODEL CODE KEY

e.g. S D - P - 6 - _ - 1

S = stacking valve

D = throttle function

P = function in P
T = function in T

6 = ISO 4401 size 3 interface

(blank) = nitrile seals (standard)
V = viton seals
for special seals - contact BHFRU

1 ... 9 = design number (omit when ordering new units)

RELATED DATA SHEETS

i - 31 DIN 24 340 size A6 interface

G - 40 Seal plate type DB-6

BUCHER HYDRAULICS

www.bucherhydraulics.com

Germany
Tel.: + 49 7742 8520
Fax: + 49 7742 7116
info.de@bucherhydraulics.com

France
Tel.: + 33 389 64 22 44
Fax: + 33 389 65 28 78
info.fr@bucherhydraulics.com

Netherlands
Tel.: + 31 7934 26 24 4
Fax: + 31 7934 26 28 8
info.nl@bucherhydraulics.com

UK
Tel.: + 44 2476 35 35 61
Fax: + 44 2476 35 35 72
info.uk@bucherhydraulics.com

USA
Tel.: + 1 262 605 82 80
Fax: + 1 262 605 82 78
info.wi@bucherhydraulics.com

Switzerland
Tel.: + 41 33 672 61 11
Fax: + 41 33 672 61 03
info.ch@bucherhydraulics.com

Italy
Tel.: + 39 0522 92 84 11
Fax: + 39 0522 51 32 11
info.it@bucherhydraulics.com

Austria
Tel.: + 43 6216 44 97
Fax: + 43 6216 44 97 4
info.at@bucherhydraulics.com

China
Tel.: + 86 10 68 31 41 08
Fax: + 86 10 68 31 41 21
info.bj@bucherhydraulics.com

Product Center (Elevator Hyd)
Tel.: + 41 41 757 03 33
Fax: + 41 41 757 05 00
info.nh@bucherhydraulics.com

SUBJECT TO CHANGE WITHOUT NOTICE

Stacking Throttle/Check Valve, size 2
Series SRDA ..

with ISO 4401-02-01 interface

4 mm nom.
p max. **250 [bar]**
Q max. **25 [l/min]**

- Semi-cartridge Throttle/Check element
- Fine control in lower flow range
- Self-cleaning throttle area

DIMENSIONS

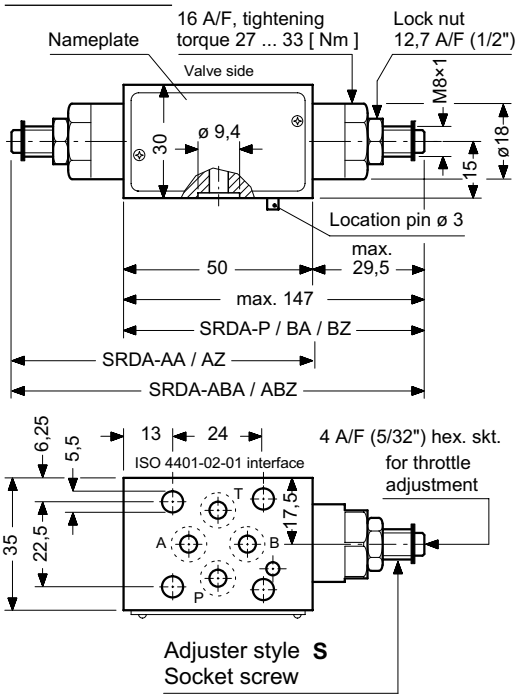

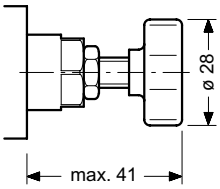

Adjuster style **H**
Hand knob

Adjuster style **Z6**, lockable hand knob type 2H. Complies with Volkswagen factory specification BV 1.09

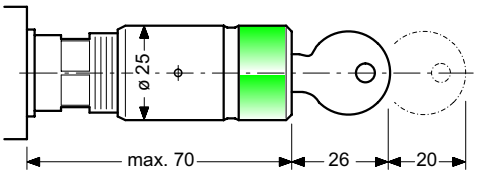

Adjuster styles **S**, **H** and **Z6** for the SRDA-...-4 cannot be supplied as conversion kits.

SYMBOLS

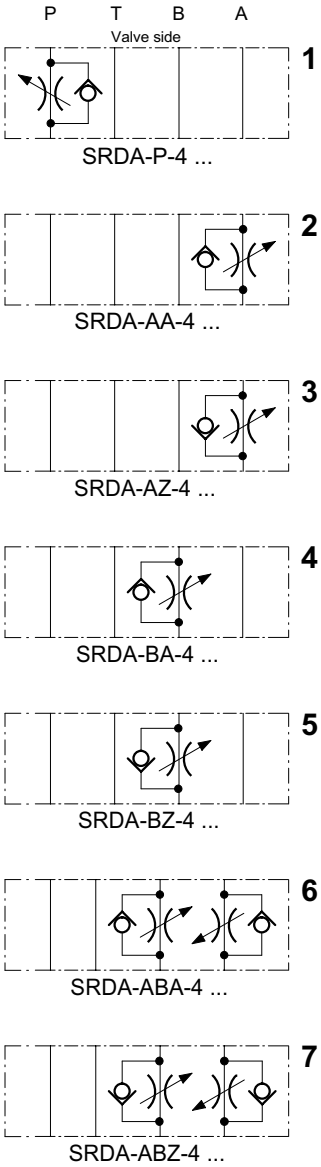

DESCRIPTION

Series SRDA-...-4 stack mounting throttle/check valves are used to regulate the speed of actuators.

In one direction they allow free flow through the check valve (cracking pressure approximately 0,6 bar) and in the opposite direction flow is regulated by the throttle setting.

The meter-in function is normally used when there is a steady resistance from the cylinder or motor. The meter-out function generates back pressure for cases where the external load varies greatly, perhaps even becoming negative.

The ø 3 mm location pin on the actuator face of the valve prevents incorrect mounting.

Valves are shipped as standard with screw adjustment. Alternatively, they can be supplied with adjustment by hand knob, or lockable hand knob.

S1Z-1585
SUBJECT TO CHANGE WITHOUT NOTICE

PRINCIPAL CHARACTERISTICS

Type	throttle/check slice valve
Design	spool type
Mounting method	stack mounting
Size	ISO 4401-02-01 interface
Mass	0,45 kg
Mounting attitude	unrestricted
Flow direction	see symbols
Operating pressure	... 250 bar in P, A, B and T ... 160 bar in T if used with WEDA-...-4 directional valve (data sheet W-12.00)
Cracking pressure	app. 0,6 bar in free flow direction
Fluids	Hydraulic oils HL and HLP to DIN 51 524 other fluids - contact HTF
Minimum fluid cleanliness	18/14 to ISO 4406 / Cetop RP70H 8 ... 9 to NAS 1638
Fluid temperature range	-20° ... +60° C
Viscosity range	10 ... 300 cSt
Flow rate, Q max.	25 l/min

SCHEMATIC SECTION

showing the relevant ports

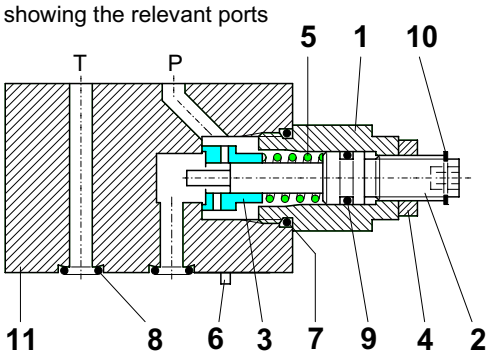

COMPONENTS / SERVICE PARTS

*) = part of seal kit no. DS-211
◢ = available as service part

It.	Qty.							Description		
1 ◢	2	2	1	1	1	1	1	Threaded housing	ø 18 x 25	
2 ◢	2	2	1	1	1	1	1	Adjuster screw	ø 8,4 x 45	
3 ◢	2	2	1	1	1	1	1	Throttle sleeve	ø 11,5 x 7	
4 ◢	2	2	1	1	1	1	1	Special nut	M8×1 × 4	
5 ◢	2	2	1	1	1	1	1	Spring	0,5 × 7,5 × 21	iG = 9,5
6 ◢	1	1	1	1	1	1	1	Roll pin	ø 3 × 6	DIN 1481
◢	1	1	1	1	1	1	1	Seal kit no. DS-211, comprising *):		
7	2*)	2	1	1	1	1	1	O-ring no. 014	ø 12,42 × 1,78	N90
8	4*)	4	4	4	4	4	4	O-ring no. 010	ø 6,07 × 1,78	N90
9	2*)	2	1	1	1	1	1	O-ring no. 009	ø 5,28 x 1,78	N90
10	2*)	2	1	1	1	1	1	Snap ring	Type SS	ø 7
11	-	-	-	-	-	-	1	Sandwich body	Type XP-4	30 x 35 x 50
	-	-	-	-	-	1	-	Sandwich body	Type XB-4	30 x 35 x 50
	-	-	-	-	1	-	-	Sandwich body	Type XC-4	30 x 35 x 50
	-	-	-	1	-	-	-	Sandwich body	Type XD-4	30 x 35 x 50
	-	-	1	-	-	-	-	Sandwich body	Type XE-4	30 x 35 x 50
	-	1	-	-	-	-	-	Sandwich body	Type X-4	30 x 35 x 50
	1	-	-	-	-	-	-	Sandwich body	Type XA-4	30 x 35 x 50

SRDA-ABZ-4
SRDA-ABA-4
SRDA-BZ-4
SRDA-BA-4
SRDA-AZ-4
SRDA-AA-4
SRDA-P-4

TO ORDER SERVICE PARTS, STATE:

- complete unit model code from the nameplate, including the design number.
- part description from above list.
- part item number from above list.
- data sheet number, including issue date
- quantity required

INSTALLATION AND SERVICING

MUST BE CARRIED OUT WITH CARE, AND BY QUALIFIED PERSONNEL ONLY.

At installation, be sure to mount the valve the correct way up. Do not confuse the flat surface (directional valve side) and the surface with O-ring counterbores (actuator side).

When changing seals, the new seals should be thoroughly oiled or greased before fitting them to the valve.

Use the correct tightening torque when fitting the cartridge.

PERFORMANCE CHARACTERISTICS

Oil viscosity 33 cSt

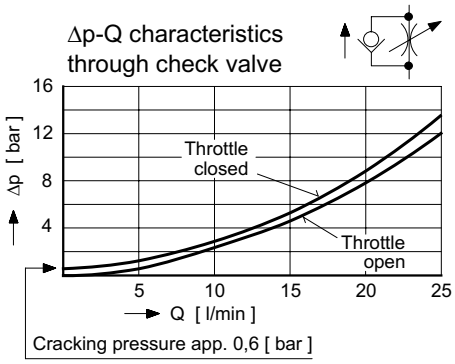

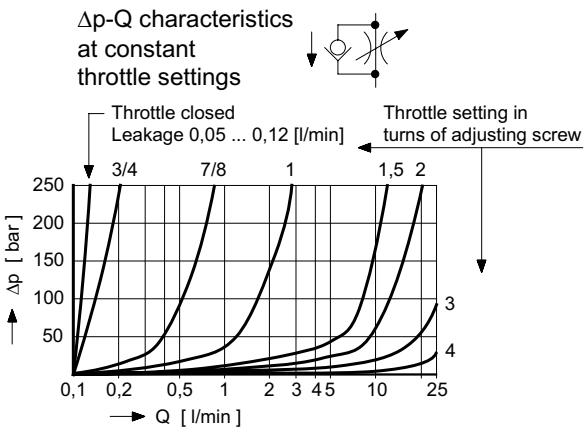

M-18.00
SUBJECT TO CHANGE WITHOUT NOTICE

MODEL CODE KEY

Ex. S RD A - A Z - 4 - S - _ - 1

S = stacking valve
RD = throttle/check function
A ... Q = **standard** model per current data sheet
Z ... R = special features by arrangement
P = function in P
A = function in A
B = function in B
AB = function in A and B
A = meter-out function
Z = meter-in function
4 = ISO 4401-02-02 interface
S = with hex. skt. screw adjuster **(standard)**
H = with hand knob adjuster type H
Z = with lockable hand knob adjuster type Z6
(Blank) = Nitrile seals **(standard)**
V = Viton seals
For special seals, contact HTF
1 ... 9 = design number (omit when ordering)

RELATED DATA SHEETS

i-30 = ISO 4401-02-01 interface

SUBJECT TO CHANGE WITHOUT NOTICE

BUCHER hydraulics
WWW.SUMY.IR

Flow valve
Throttle check valve

Q_{max} = 80 l/min, p_{max} = 350 bar
Direct acting, spool type,
Type series: SMDR-_-6-...

- Stack valve
- External parts of screw-in valves with zinc-nickel plating according to DIN EN ISO 19598
- Stackable valve elements
- High degree of flexibility due to the possibility of different combinations

Symbol

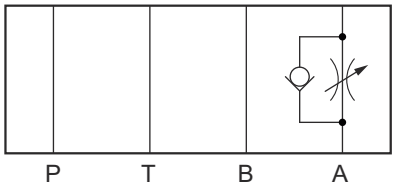

SMDR-AZ-…

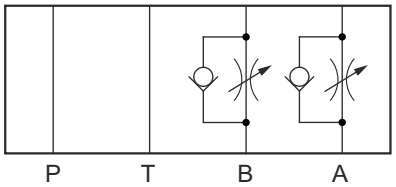

SMDR-ABZ-…

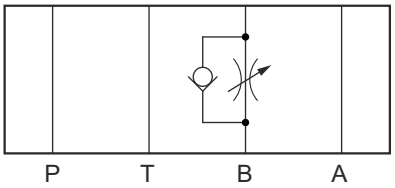

SMDR-BZ-…

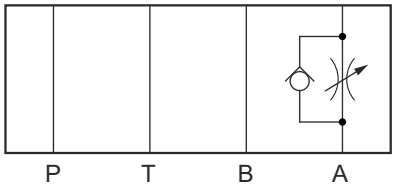

SMDR-AA-…

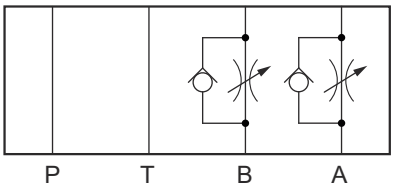

SMDR-ABA-…

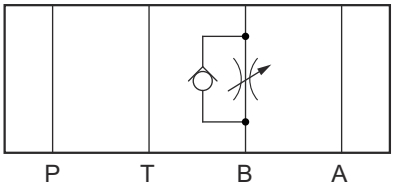

SMDR-BA-…

Description

The throttle check valves, series SMDR..., are size 6, direct acting stack valves with interface to ISO 4401-03-02. They are designed on the proven sliding-spool principle. The integral check function allows free flow in one direction (opening pressure approx. 0.7 bar) and the set, throttled flow in the opposite direction. The design of the throttle ensures automatic self-cleaning under reverse flow. The setting is made at the self-locking adjusting screw and can be additionally secured with the lock nut. There are different versions available.

WWW.SUMY.IR

These valves are mainly used in mobile and industrial applications, and provide high flexibility for stackable system solutions. For installation, please refer to the section related data sheets.

Technical data

General characteristics	Description, value, unit
Function group	flow valve
Function	throttle check valve
Design	stack valve
Characteristic	direct acting, spool type
MTTFd value	150 years
Construction size	NG 6
Mounting attitude	unrestricted
Weight	1.30 kg
Interface according to	ISO 4401-03-02
Minimum ambient temperature	- 30 °C
Maximum ambient temperature	+ 80 °C
Surface protection	external parts of screw-in valves with zinc-nickel plating according to DIN EN ISO 19598
Surface protection addition	stack-mounting body with temporary corrosion protection
Sealing material	see ordering code
Seal kit order number	NBR: DS-202-N / FKM: DS-202-V

Hydraulic characteristics	Description, value, unit
Maximum operating pressure	350 bar
Maximum flow rate	80 l/min
Flow direction	see symbol
Hydraulic fluid	HL and HLP mineral oil according to DIN 51 524; other fluids on request!
Minimum fluid temperature	- 30 °C
Maximum fluid temperature	+ 80 °C
Viscosity range	10 ... 650 mm^2/s (cSt)
Recommended viscosity range	15 ... 250 mm^2/s (cSt)
Minimum fluid cleanliness (cleanlineless class according to ISO 4406:1999)	class 20/18/15

Performance graphs

measured with oil viscosity 33.0 mm²/s (cSt)

Δp = f (Q) Pressure drop-flow rate characteristic

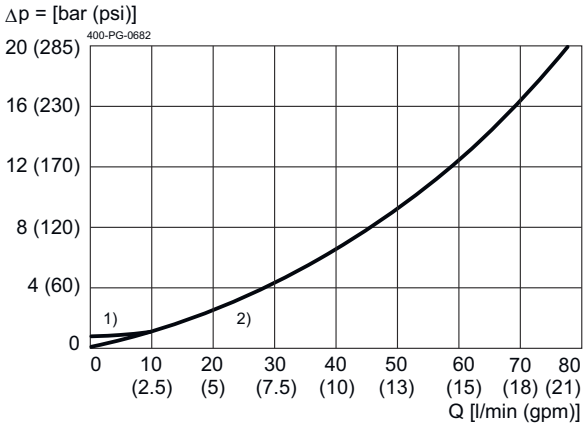

1) through check valve: throttle cosed
2) through check valve: throttle open

Δp = f (Q) Pressure drop-flow rate characteristic

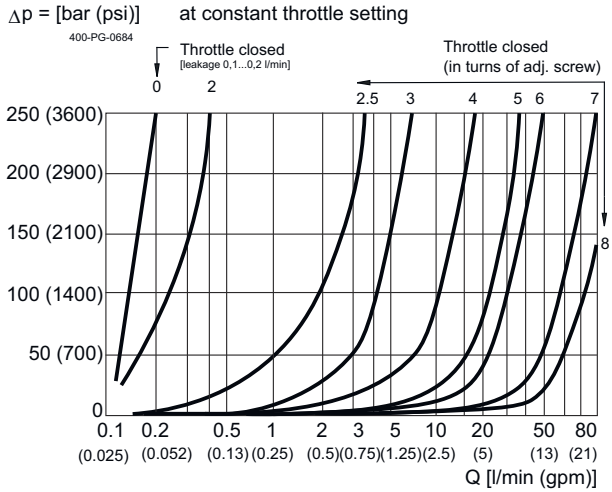

Installation

Beispiel für die Masseinheit:
Example for the dimensional units:

0.79 = 0.79 mm millimeter
(.031) = 0.031" inch

Funktion (Drosselung) im Ablauf / function (throtteling) in outlet

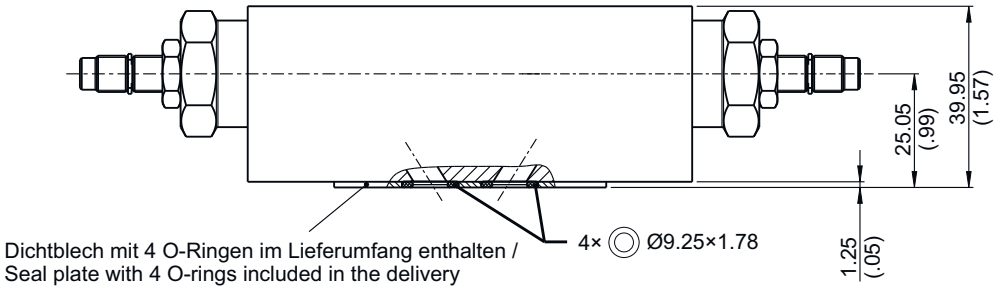

Funktion (Drosselung) im Zulauf / function (throtteling) in inlet

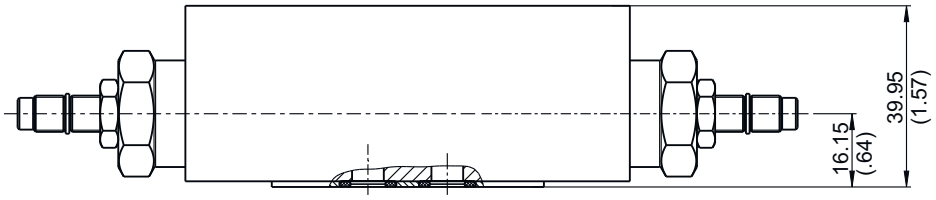

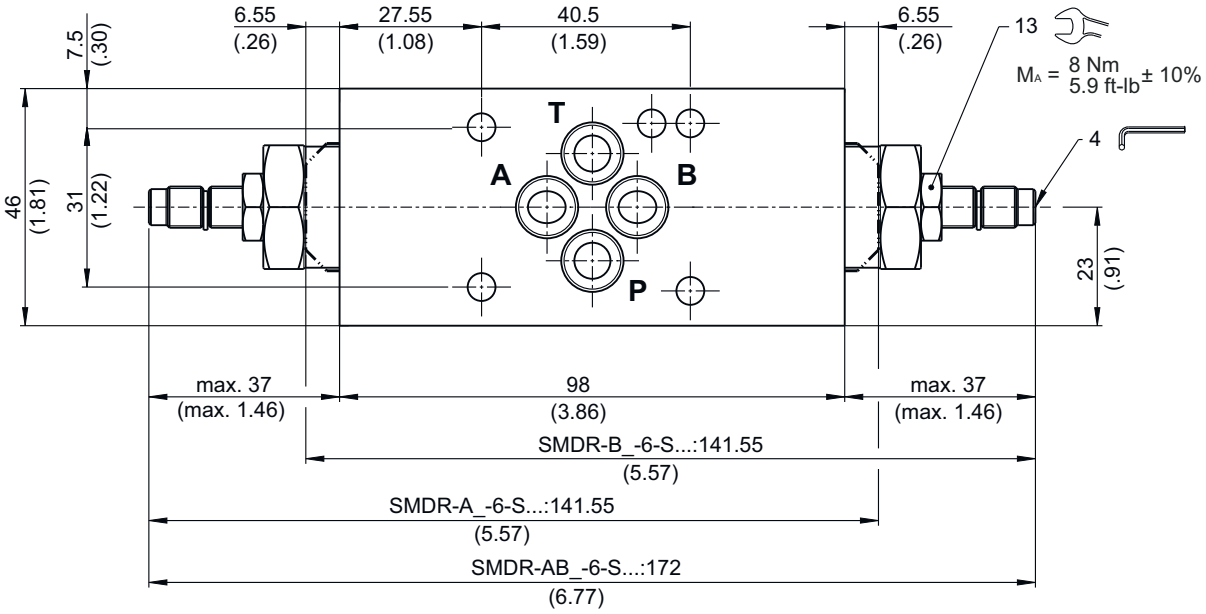

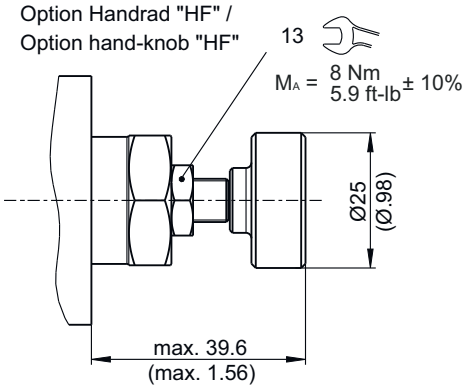

ATTENTION!
Only qualified personnel with mechanical skills may carry out any maintenance work. Generally, the only work that should ever be undertaken is to check, and possibly replace, the seals. When changing seals, oil or grease the new seals thoroughly before fitting them.

Ordering code

Ex. S M D R - AA - 6 - S - _ - N A 1

S = stack valve
M = flow-control valve
D = throttle valve
R = check valve function

AA = function in A, throttling in outlet
AZ = function in A, throttling in inlet
BA = function in B, throttling in outlet
BZ = function in B, throttling in inlet
ABA = function in A and B, throttling in outlet
ABZ = function in A and B, throttling in inlet

6 = nominal size 6

S = screw adjuster (standard)
SF = screw adjuster, fine opening
H = hand-knob adjuster
HF = hand-knob adjuster, fine opening

(blank) = temporary corrosion protection (standard)
BZN = coating ZnNi (on request)

N = NBR (nitril-butadien-rubber / BUNA) seals (standard)
V = FKM (fluorocarbon rubber / VITON) seals
(special seals - please contact BUCHER)

A…Q = standard model - see relevant data sheets
Z…R = special features - pleace consult BUCHER

1…9 = design stage (omit when ordering new units)

Related data sheets

Reference	Description
400-P-030501	interface ISO 4401-03... (Size 6)
400-P-010101	MTTFd Values for Hydraulic Valves

info.ch@bucherhydraulics.com **www.bucherhydraulics.com**

© 2026 by Bucher Hydraulics AG Frutigen, 3714 Frutigen, Switzerland

All rights reserved.
Data is provided for the purpose of product description only, and must not be construed as warranted characteristics in the legal sense. The information does not relieve users from the duty of conducting their own evaluations and tests. Because the products are subject to continual improvement, we reserve the right to amend the product specifications contained in this catalogue.

BUCHER hydraulics

WWW.SUMY.IR

Flow valve
Throttle check valve

Q_{max} = 160 l/min, p_{max} = 350 bar
direct acting, spool type
Type series: SMDR-_-10-...

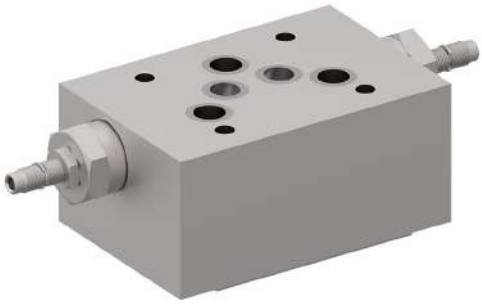

- Stack valve
- Interface to ISO 4401-05-04
- External parts of screw-in valves with zinc-nickel plating according to DIN EN ISO 19598
- Stack-mounting body with temporary corrosion protection
- Stackable valve elements
- High degree of flexibility due to the possibility of different combinations

Description

The throttle check valves, series SMDR..., are size 10, direct acting stack valves with interface to ISO 4401-05-04. They are designed on the proven sliding-spool principle. The integral check function allows free flow in one direction (opening pressure approx. 0.7 bar) and the set, throttled flow in the opposite direction. The design of the throttle ensures automatic self-cleaning under reverse flow. The setting is made at the self-locking adjusting screw and can be additionally secured with the lock nut. There are different versions available. These valves are mainly used in mobile and industrial applications, and provide high flexibility for stackable system solutions. For installation, please refer to the section related data sheets.

Symbol

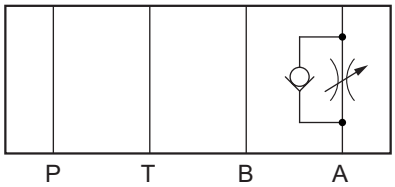

SMDR-AZ-…

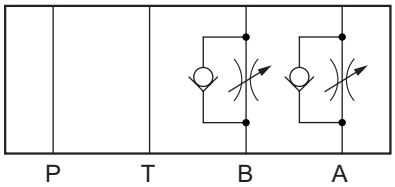

SMDR-ABZ-…

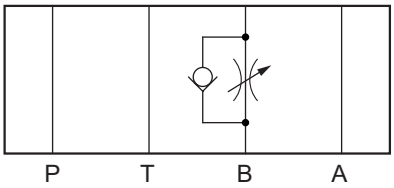

SMDR-BZ-…

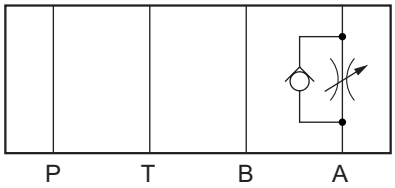

SMDR-AA-…

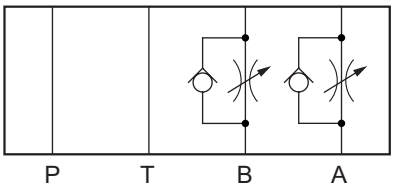

SMDR-ABA-…

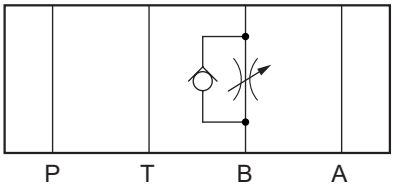

SMDR-BA-…

Technical data

General characteristics	Description, value, unit
Function group	Flow valve
Function	Throttle check valve
Design	Stack valve
Characteristic	direct acting, spool type
Construction size	nominal size 10
Mounting attitude	unrestricted
Weight	2.90 kg
Interface according to	ISO 4401-05-04
Minimum ambient temperature	- 30 °C
Maximum ambient temperature	+ 80 °C
Surface protection	External parts of screw-in valves with zinc-nickel plating according to DIN EN ISO 19598
Surface protection addition	Stack-mounting body with temporary corrosion protection
Sealing material	see ordering code
Seal kit order number	NBR: DS-214-N / FKM: DS-214-V

Hydraulic characteristics	Description, value, unit
Maximum operating pressure	350 bar
Maximum flow rate	160 l/min
Flow direction	see symbol
Hydraulic fluid	HL and HLP mineral oil according to DIN 51 524; other fluids on request!
Minimum fluid temperature	- 30 °C
Maximum fluid temperature	+ 80 °C
Viscosity range	10 ... 650 mm^2/s (cSt)
Recommended viscosity range	15 ... 250 mm^2/s (cSt)
Minimum fluid cleanliness (cleanlineless class according to ISO 4406:1999)	class 20/18/15

Performance graphs

measured with oil viscosity 33.0 mm²/s (cSt)

Δp = f (Q) Pressure drop-flow rate characteristic

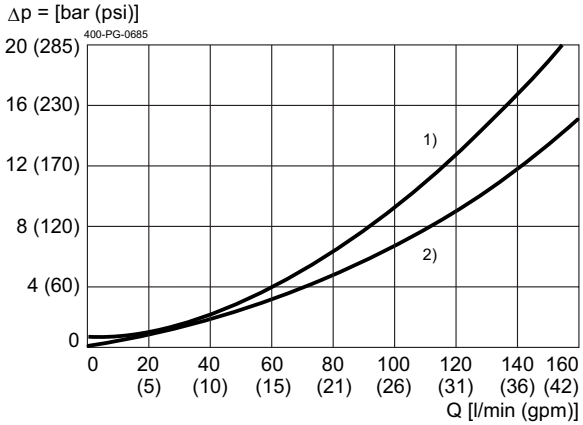

1) through check valve: throttle cosed
2) through check valve: throttle open

Δp = f (Q) Pressure drop-flow rate characteristic

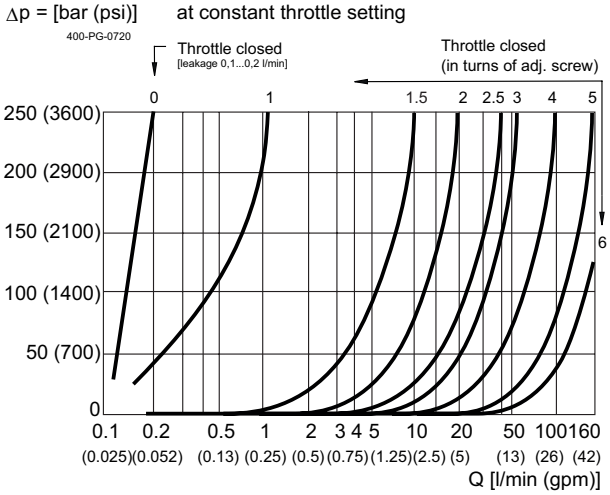

Dimensions and sectional view

Funktion (Drosselung) im Ablauf / function (throtteling) in outlet

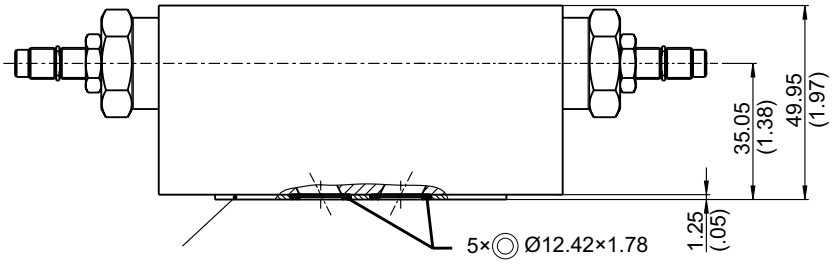

Dichtblech mit 5 O-Ringen im Lieferumfang enthalten /
Seal plate with 5 O-rings included in the delivery

Funktion (Drosselung) im Zulauf / function (throtteling) in inlet

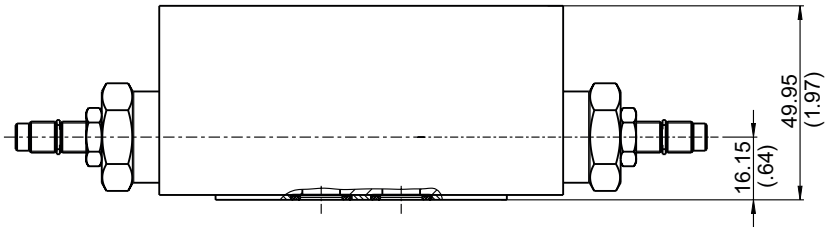

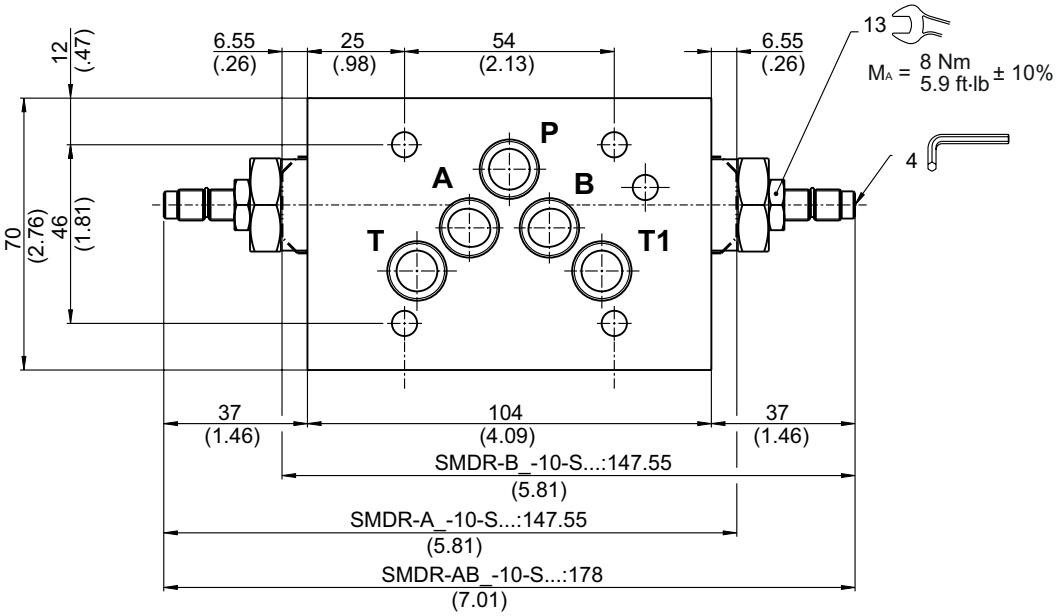

Option Handrad "H" /
Option hand-knob "H"

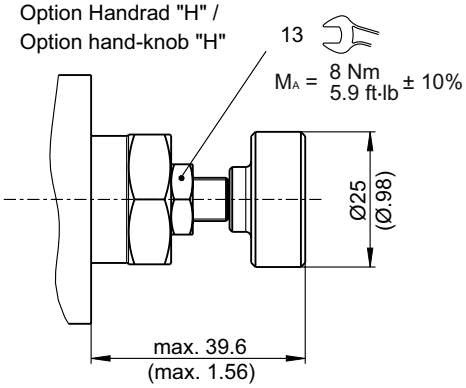

Beispiel für die Masseinheit:
Example for the dimensional units:

0.79 = 0.79 mm millimeter
(.031) = 0.031" inch

Installation information

ATTENTION!
Only qualified personnel with mechanical skills may carry out any maintenance work. Generally, the only work that should ever be undertaken is to check, and possibly replace, the seals. When changing seals, oil or grease the new seals thoroughly before fitting them.

Ordering code

Ex. S M D R - AA - 10 - S - _ - N A 1

S	= stack valve
M	= flow-control valve
D	= throttle valve
R	= check valve function
AA	= function in A, throttling in outlet
AZ	= function in A, throttling in inlet
BA	= function in B, throtteling in outlet
BZ	= function in B, throtteling in inlet
ABA	= function A and B, throtteling in outlet
ABZ	= function in A and B, throtteling in inlet
10	= nominal size 10
S	= screw adjuster (standard)
H	= hand-knob adjuster
(blank)	= temporary corrosion protection (standard)
BZN	= coating ZnNi (on request)
N	= NBR (nitril-butadien-rubber / BUNA) seals (standard)
V	= FKM (fluorocarbon rubber / VITON) seals (special seals - please contact BUCHER)
A…Q	= standard model - see relevant data sheets
Z…R	= special features - pleace consult BUCHER
1…9	= design stage (omit when ordering new units)

Related data sheets

Reference	Description
400-P-050101	Interface ISO 05 (Size 10) according to ISO 4401-05-04

info.ch@bucherhydraulics.com
www.bucherhydraulics.com

© 2024 by Bucher Hydraulics AG Frutigen, 3714 Frutigen, Switzerland

All rights reserved.
Data is provided for the purpose of product description only, and must not be construed as warranted characteristics in the legal sense. The information does not relieve users from the duty of conducting their own evaluations and tests. Because the products are subject to continual improvement, we reserve the right to amend the product specifications contained in this catalogue.

BUCHER hydraulics
WWW.SUMY.IR

M - 28 A a

Stacking Throttle / Check Valve, ISO size 7

Series SRDB ...

260 l/min, 350 bar

- Meter-out flow control in A, B or A and B
- Meter-in flow control in A, B or A and B
- Interface to ISO 4401 / CETOP R35H size 07, NFPA D07, DIN 24 340 A16

SYMBOLS
METER-OUT CONTROL

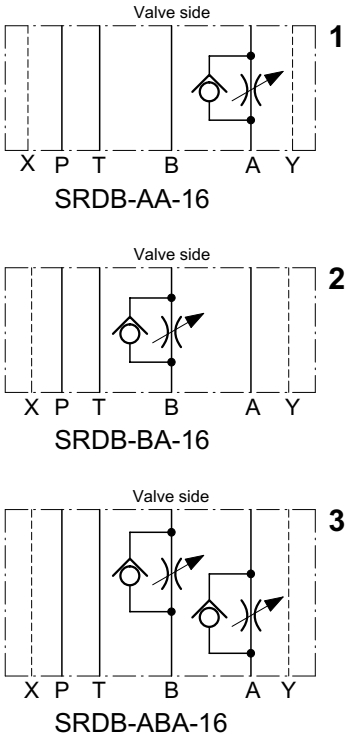

DIMENSIONS - METER-OUT FUNCTIONS

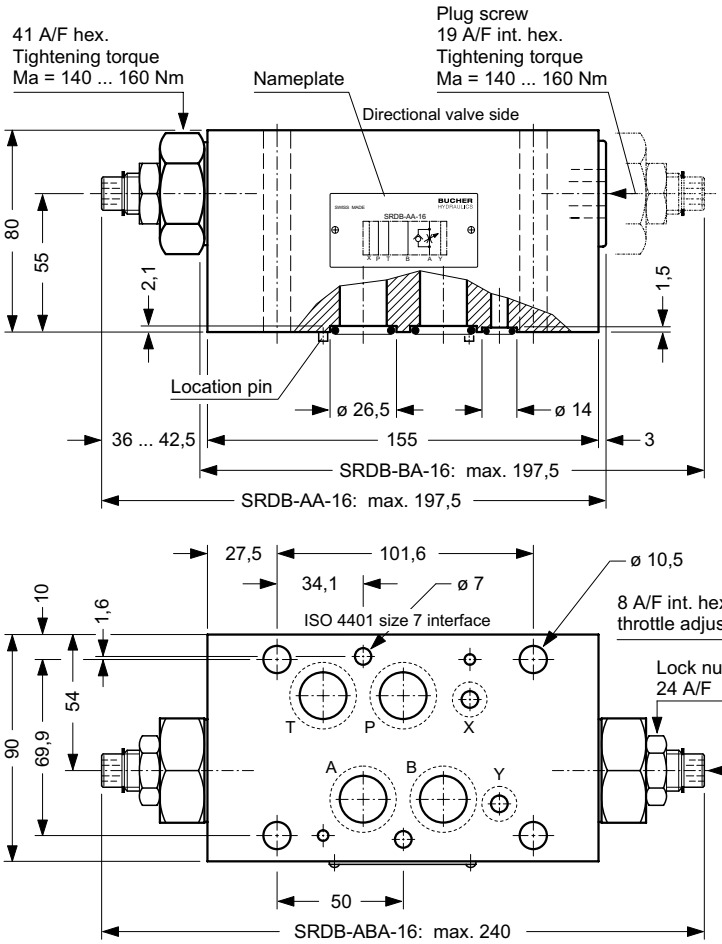

Option:
Adjuster style **H**
Hand knob

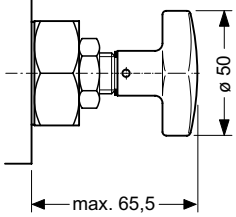

Application example

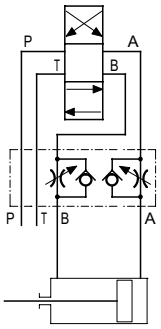

Meter-out control
(SRDB-ABA-16)

DESCRIPTION

These throttle/check valves use the well known 'sandwich' principle - they are mounted between a directional valve and another control module or the sub-plate.

The throttle/check elements allow variable restriction of the flow leaving the actuator ('meter-out' flow control).

Flow enters the actuator without restriction through the integral check valve.

The meter-out function creates a 'hydraulic restraint for the actuator for cases where the external load varies greatly, perhaps even becoming negative (symbols 1 ... 3).

Sealing at the manifold-side (bottom) interface is by means of O-rings fitted in counterbores in the stacking body.

DIMENSIONS - METER-IN FUNCTION

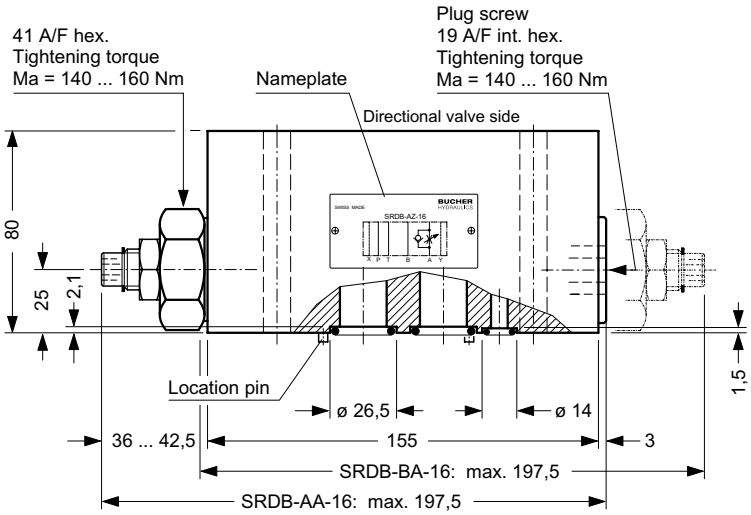

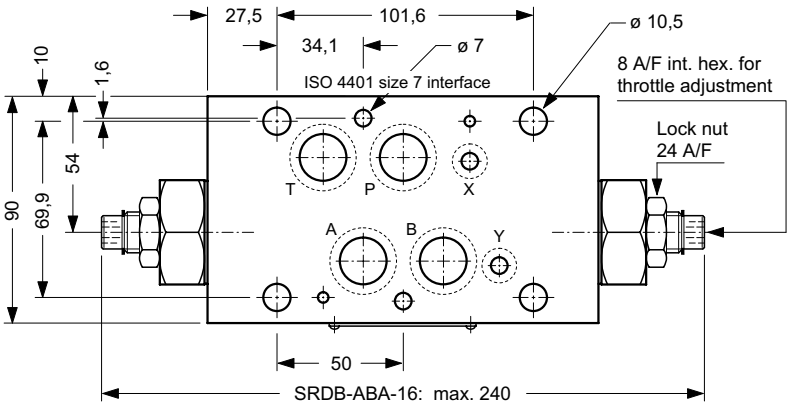

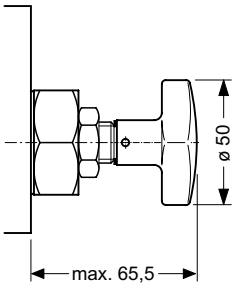

Option:
Adjuster style **H**
Hand knob

SYMBOLS
METER-IN CONTROL

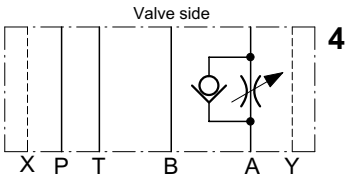

SRDB-AZ-16

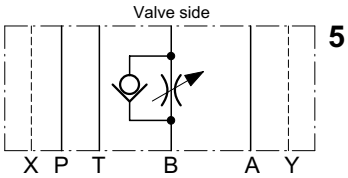

SRDB-BZ-16

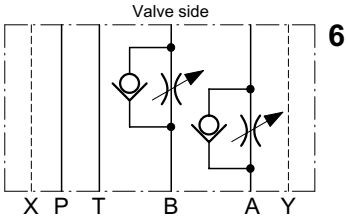

SRDB-ABZ-16

Application example

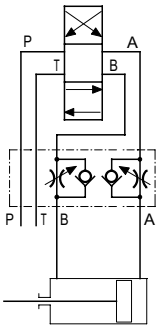

Meter-in control
(SRDB-ABZ-16)

DESCRIPTION

These throttle/check valves use the well known 'sandwich' principle - they are mounted between a directional valve and another control module or the sub-plate.

The throttle/check elements allow variable restriction of the flow entering the actuator ('meter-in' flow control).

Flow leaves the actuator without restriction through the integral check valve.

The meter-in function is normally used when there is a steady resistance from the cylinder or motor (symbols 4 ... 6).

Sealing at the manifold-side (bottom) interface is by means of O-rings fitted in counterbores in the stacking body.

SCHEMATIC SECTION

showing the relevant ports (Ex. SRDB-AA-16)

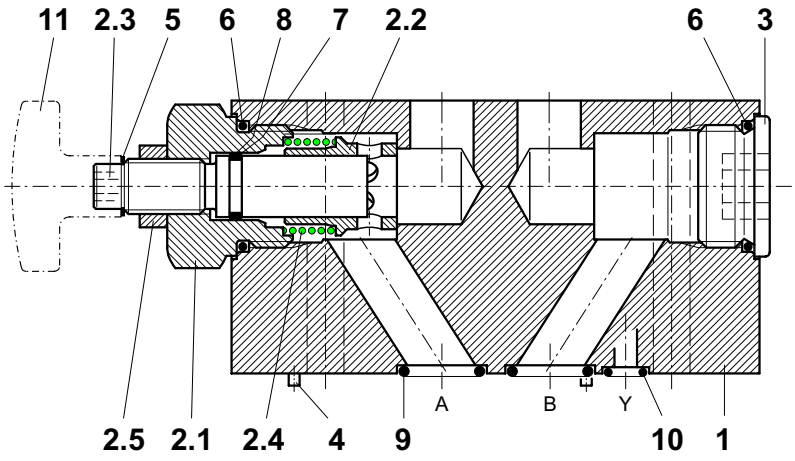

COMPONENTS / SERVICE PARTS

*) = part of seal kit no. DS-270
◢ = available as service part

It.		Qty.			Description		
1	--	--	1	1	Stacking body	90 x 80 x 155	type X3-16
	1	1	--	--	Stacking body	90 x 80 x 155	type XZ3-16
2 ◢	2	1	2	1	Functional insert RDB-16, comprising **)		
2.1	2	1	2	1**)	Guide nut	41 A/F hex. × 37	
2.2	2	1	2	1**)	Metering sleeve	ø 28 x 33	
2.3	2	1	2	1**)	Adjusting screw	ø 18 x 81,8	
2.4	2	1	2	1**)	Spring	1,4 x 28,2 x 27	iG = 4
2.5	2	1	2	1**)	Hex. nut	M 16 x 1,5	DIN 439 B
3	--	1	--	1	Plug screw	M 36 x 1,5	DIN 908
4	2	2	2	2	Roll pin (heavy)	ø 3 x 8	DIN 7344
◢					Seal kit no. DS-270, comprising *)		
5	2	1	2*)	1**)	Snap ring	ø 14	type SS
6	2	2	2*)	2**)	O-ring no. 124	ø 31,42 x 2,62	N90
7	2	1	2*)	1**)	O-ring no. 015	ø 14,00 x 1,78	N90
8	2	1	2*)	1**)	Backup ring	ø 18 / 15,2 x 1,2	
9	4	4	4*)	4	O-ring no. 118	ø 21,89 x 2,62	N90
10	2	2	2*)	2	O-ring	ø 10,00 x 2,00	N90
11	(2)	(1)	(2)	(1)	Hand knob, complete (option)		

SRDB-AA-16 / SRDB -BA-16
SRDB-ABA-16
SRDB-AZ-16 / SRDB -BZ-16
SRDB-ABZ-16

TO ORDER SERVICE PARTS, STATE:
- complete unit model code from the nameplate including the design number
- data sheet number, including issue date
- part item number from above list
- part description from above list
- quantity required

INSTALLATION AND SERVICING

MUST BE CARRIED OUT WITH CARE, AND BY QUALIFIED PERSONNEL ONLY

At installation, make sure that the valve interfaces align with the interfaces of the mating surfaces and do not confuse the directional valve ('top') and manifold ('bottom') faces of the valve.

When changing seals, the new seals must be thoroughly oiled or greased before fitting them to the valve.

Use the specified tightening torque when fitting the guide nut item 2.1 and the plug screw item 3.

MAIN CHARACTERISTICS

Type	stacking throttle / check valve
Design	spool type
Mounting method	stack mounting
Size	ISO 4401 size 07, nominal 16 mm
Mass	SRDB-AA / -AZ / SRDB-BA / -BZ = 7.35 kg
	SRDB-ABA / SRDB-ABZ = 7.70 kg
Mounting attitude	unrestricted
Flow direction	see symbols
Operating pressure	... 350 bar in P, A, B and T
Cracking pressure through check valve	approx. 0.7 bar
Fluids	hydraulic oils HL and HLP to DIN 51 524
	other fluids - contact BHFRU
Min. fluid cleanliness	18/14 to ISO 4406 / CETOP RP70H
	8 ... 9 to NAS 1638
Fluid temperature range	-20° ... + 60° C
Viscosity range	10 ... 300 cSt
Flow rate Q max.	260 l/min

PERFORMANCE DATA

measured with oil viscosity 33 cSt

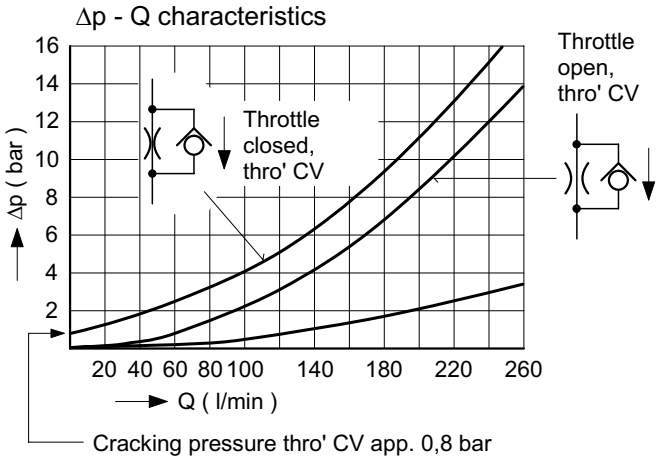

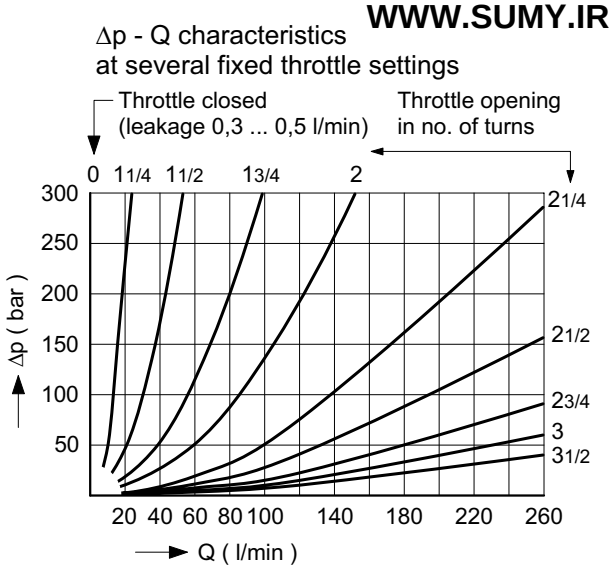

MODEL CODE KEY

Ex. S RD B - AB A - 16 _ _ - 1

Stack mounting valve

Throttle / check function

A ... Q = standard model per relevant data sheet
Z ... R = special features by arrangement

A = function in A
B = function in B
AB = function in A and B

A = meter-out function (see symbols 1 ... 3)
Z = meter-in function (see symbols 4 ... 6)

16 = ISO 4401 size 07 interface, nominal 16 mm

(blank) = hex. skt. screw adjuster (**standard**)
H = hand knob adjuster (option)

(blank) = Nitrile seals (**standard**)
V = Viton seals
Special seals by arrangement (contact BHFRU)

1 ... 9 = design no. (omit when ordering)

RELATED DATA SHEETS

i - 51 DIN 24 340 A16 interface
i - 00 Table of interface equivalents

BUCHER HYDRAULICS
www.bucherhydraulics.com

Germany
Tel.: + 49 7742 8520
Fax: + 49 7742 7116
info.de@bucherhydraulics.com

France
Tel.: + 33 389 64 22 44
Fax: + 33 389 65 28 78
info.fr@bucherhydraulics.com

Netherlands
Tel.: + 31 7934 26 24 4
Fax: + 31 7934 26 28 8
info.nl@bucherhydraulics.com

UK
Tel.: + 44 2476 35 35 61
Fax: + 44 2476 35 35 72
info.uk@bucherhydraulics.com

USA
Tel.: + 1 262 605 82 80
Fax: + 1 262 605 82 78
info.wi@bucherhydraulics.com

Switzerland
Tel.: + 41 33 672 61 11
Fax: + 41 33 672 61 03
info.ch@bucherhydraulics.com

Italy
Tel.: + 39 0522 92 84 11
Fax: + 39 0522 51 32 11
info.it@bucherhydraulics.com

Austria
Tel.: + 43 6216 44 97
Fax: + 43 6216 44 97 4
info.at@bucherhydraulics.com

China
Tel.: + 86 10 68 31 41 08
Fax: + 86 10 68 31 41 21
info.bj@bucherhydraulics.com

Product Center (Elevator Hyd.)
Tel.: + 41 41 757 03 33
Fax: + 41 41 757 05 00
info.nh@bucherhydraulics.com

SUBJECT TO CHANGE WITHOUT NOTICE

Pressure Unloading Valve, Size 4

Q_{max} = 30 l/min, p_{max} = 250 bar
Two-stage, various on-off pressure differentials, with manual adjustment
Series DWPB-4N…

- Compact construction for cavity type AN – 3/4-16 UNF
- External pilot drain
- On-off differential independent of tank line pressure
- Choice of 5 on-off differentials
- 3 pressure ranges available
- With integral pressure-relief function
- Available with hand-knob
- All exposed parts with zinc-nickel plating
- Can be fitted in a line-mounting body

1 Description

Series DWPB-4N… cartridges are size 4, two stage, high performance pressure-unloading valves with an 3/4-16 UNF mounting thread. They consist of a spool-type main stage and a leak-free, ball-type pilot stage. Unloading valves are used wherever a pump has to be disconnected from and re-connected to a pressure circuit. For this purpose, either the 'Off' pressure or the 'On' pressure of the cartridge can be set. When the 'Off' pressure is set, the 'On' point will depend on the selected percentage on-off differential, or the other way round. To disconnect the pump, the cartridge responds to rising pressures at ports 4 and 1 by opening the connection from 4 → 3. This connection is then kept open until the selected percentage on-off differential is reached (falling pressure at port 1) and the connection 4 → 3 closes again (the 'On' point). Because ports 2 and 3 are run back to tank separately, the on-off differential (bar) is unaffected by any back-pressure in port 3. These unloading valves are predominantly used in accumulator-charging circuits, 2-pump systems, and circuits for fast-ad vance → feed changeover, and in such cases the cartridges also provide a pressure-relief function e.g. for protecting the pump (see the application examples). All external parts of the cartridge are zinc-nickel plated according to DIN EN ISO 19 598 and are thus suitable for use in the harshest operating environments. If you intend to manufacture your own cavities or are designing a line-mounting installation, please refer to the section “Related data sheets”.

2 Symbol

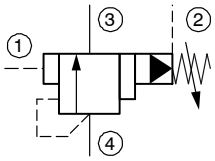

3 Technical data

General characteristics	Description, value, unit
Designation	pressure unloading cartridge valve
Design	two-stage, with manual adjustment, various on-off pressure differentials
Mounting method	screw-in cartridge 3/4-16 UNF
Tightening torque	40 Nm ± 10 %
Size	nominal size 4, cavity type AN

WWW.SUMY.IR

General characteristics	Description, value, unit
Weight	0.2 kg
Mounting attitude	unrestricted
Ambient temperature range	-25 °C … +80 °C

Hydraulic characteristics	Description, value, unit
Maximum operating pressure	250 bar
Maximum flow rate	30 l/min
Nominal pressure ranges	04 = (10…40 bar), 10 = (20…100 bar), 25 = (50…250 bar)
On-off differentials [1)] (on-off differential from 'Off' (unload) pressure)	8 … 12 % 13 … 17 % 17 … 23 % 27 … 33 % 37 … 43 %
Flow direction	4 → 3, see symbols
Hydraulic fluid	HL and HLP mineral oil to DIN 51 524; for other fluids, please contact BUCHER
Hydraulic fluid temperature range	-25 °C … +80 °C
Viscosity range	10…650 mm^2/s (cSt), recommended 15...250 mm^2/s (cSt)
Minimum fluid cleanliness Cleanliness class to ISO 4406 : 1999	class 20/18/15

4 Performance graphs measured with oil viscosity 33 mm^2/s (cSt)

Δp = f (Q) Pressure drop - Flow rate characteristic
(for unloaded bypass, valve open)

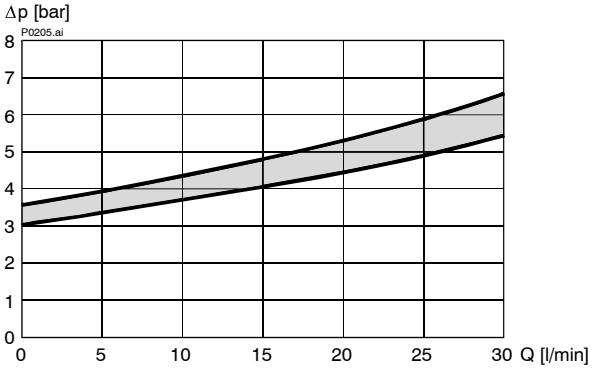

Δp = f (Q) Pressure drop - Flow rate characteristic
(pressure-relief function)

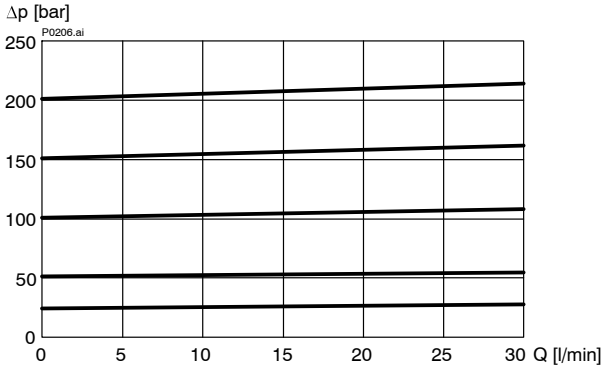

p = f (Q) Performance limits [250 bar]

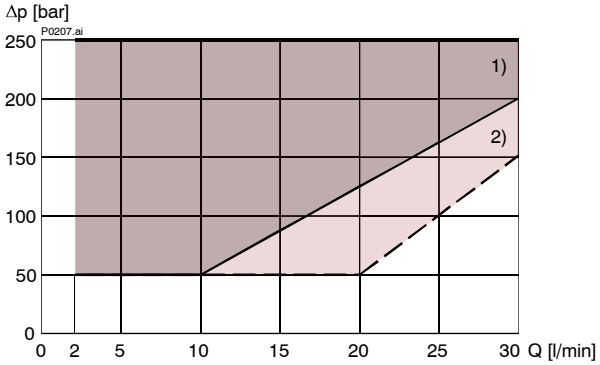

1) On-off differential 8…12 %
2) On-off differential 13…17 %

p = f (Q) Performance limits [250 bar]

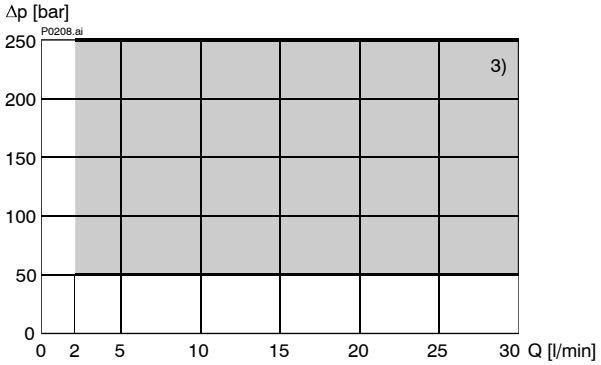

3) On-off differential 17…23 %, 27…33 % and 37…43 %

p = f (Q) Performance limits [100 bar]

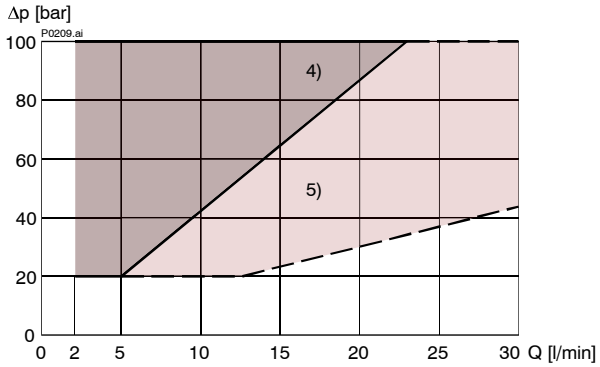

4) On-off differential 8…12 %
5) On-off differential 13…17 % and 17…23 %

p = f (Q) Performance limits [100 bar]

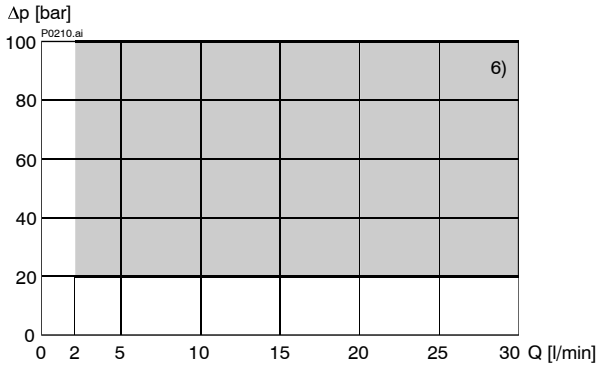

6) On-off differential 27…33 % and 37…43 %

p = f (Q) Performance limits [40 bar]

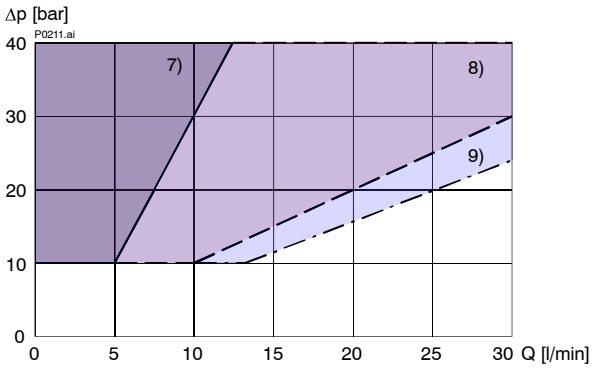

7) On-off differential 8…12 %
8) On-off differential 13…17 %
9) On-off differential 17…23 %

p = f (Q) Performance limits [40 bar]

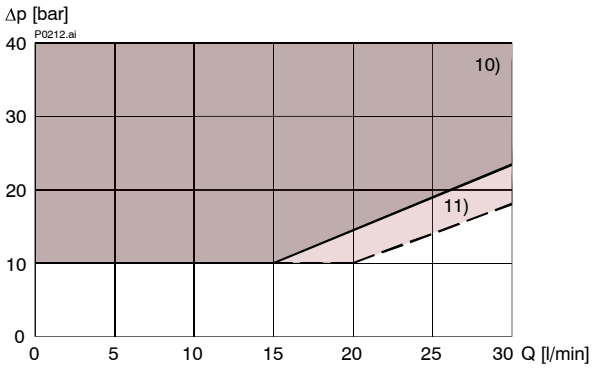

10) On-off differential 27…33 %
11) On-off differential 37…43 %

5 Dimensions & sectional view

With adjusting screw “S”

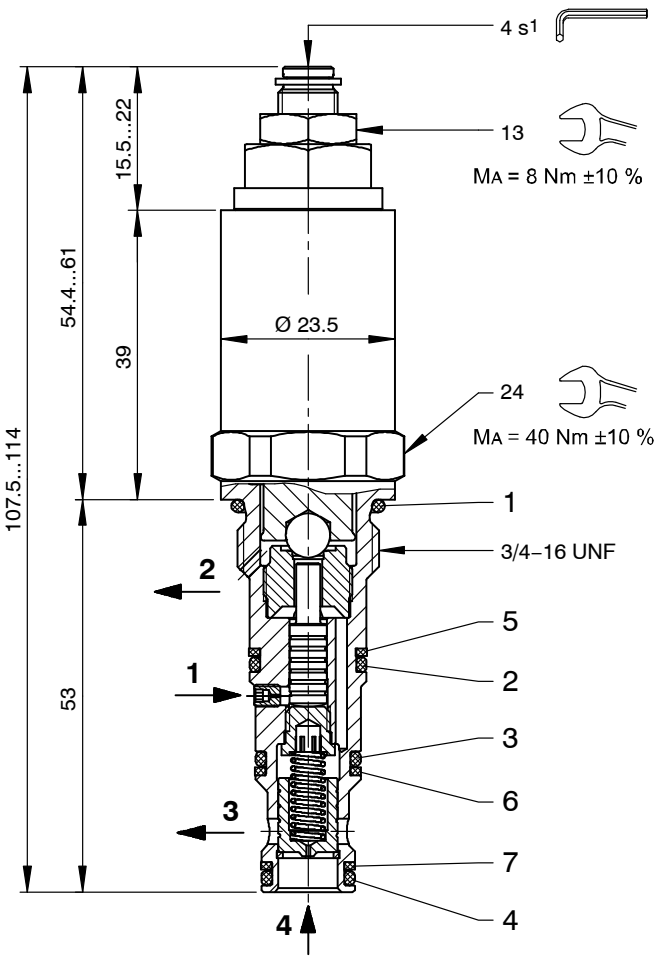

With hand-knob adjuster “H”

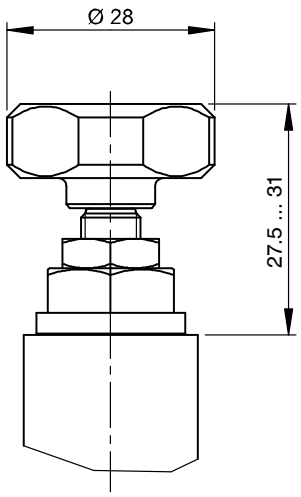

6 Installation information

IMPORTANT!
When fitting the cartridges, use the specified tightening torque. Set the switching point by means of the adjusting screw (s_1) or the hand knob. Either set the 'Off' pressure, in which case the 'On' pressure will depend on the selected percentage on-off differential, or the other way around. After you have set the valve, lock the adjusting screw with the lock nut.

ATTENTION!
Only qualified personnel with mechanical skills may carry out any maintenance work. Generally, the only work that should ever be undertaken is to check, and possibly replace, the seals. When changing seals, oil or grease the new seals thoroughly before fitting them.

Seal kit NBR no. DS-325-N [12)]

Item	Qty.	Description
1	1	O-ring no. 017 ∅ 17,17 x 1,78 N90
2	1	O-ring no. 014 ∅ 12,42 x 1,78 N90
3	1	O-ring no. 013 ∅ 10,82 x 1,78 N90
4	1	O-ring no. 012 ∅ 9,25 x 1,78 N90
5	1	Backup ring ∅ 10,70 x 1,45 x 1,00 FI0751
6	1	Backup ring ∅ 9,40 x 1,45 x 1,00 FI0751
7	1	Backup ring ∅ 7,80 x 1,45 x 1,00 FI0751

IMPORTANT!
[12)] Seal kit with FKM (Viton) seals, no. DS-325-V

7 Application examples

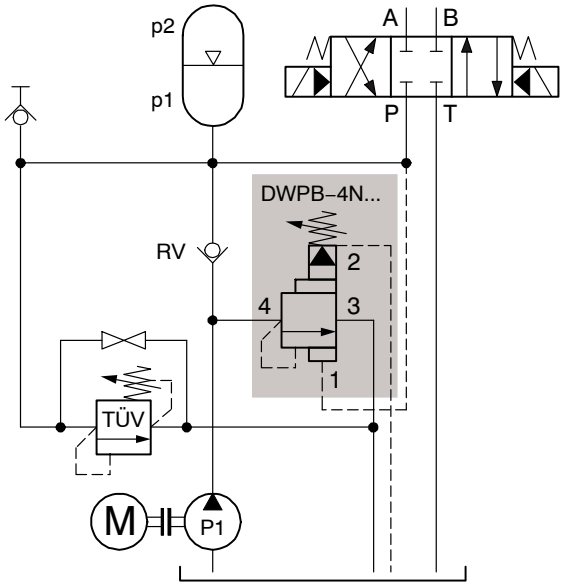

p1 = 'On' pressure
p2 = 'Off' pressure

Accumulator-charging circuit

In this application, the DWPB-4N… unloading cartridge performs an automatic accumulator-charging function in response to the pressures at ports 4 and 1. Here, the normal procedure is to use the adjusting screw to set the upper, 'Off' pressure p2, and when this pressure is reached the pump will therefore be switched over to unloaded bypass (connection 4 → 3 open). The 'Off' pressure p2 and the on-off differential (10...40 %) determine the lower, 'On' pressure p1. When demand causes the pressure in the accumulator circuit to fall to p1, the unloading cartridge closes the connection 4 → 3 and the pump supplies oil to the accumulator circuit until the 'Off' pressure p2 is reached and another 'unload' occurs.

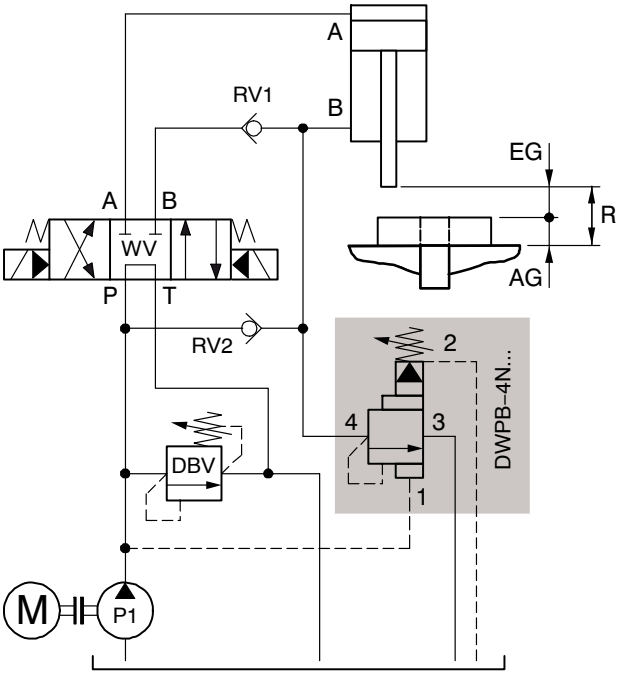

EG = fast-advance speed
AG = feed speed
R = return stroke

Pressure-dependent fast-advance → feed changeover with 1 pump

In this application, when the directional valve (WV) is in its parallel-arrows position, the unloading cartridge DWPB-… remains closed until the valve pressure setting is reached, and oil discharging from the rod end of the cylinder is routed to the head end, where it supplements the pump delivery (fast-advance circuit). When the pressure at ports 4 and 1 rises above the setting, the unloading cartridge opens the connection 4 → 3 and the oil from the rod end flows to tank with virtually no back-pressure. This cancels the fast advance, and the cylinder's potential force is automatically increased (feed-speed circuit). The maximum force is limited by the pressure-relief valve (DBV) positioned on the primary side. When the directional valve (WV) is in its crossed-arrows position, the unloading cartridge is closed and the cylinder can be in-stroked again.

IMPORTANT!

The changeover from fast to slow speed means a reduction in flow rate, which is often accompanied by a sharp drop in system pressure. We therefore recommend the use of unloading cartridges with an on-off differential of 20 %…40 %.

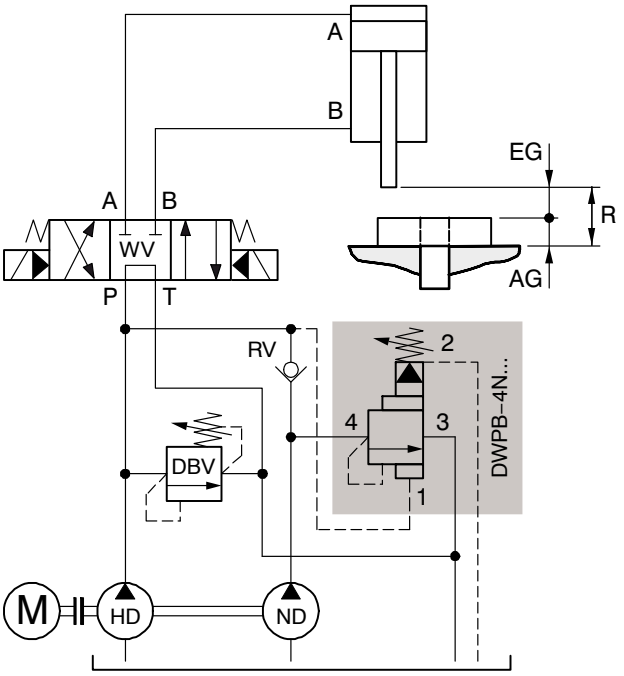

EG = fast-advance speed
AG = feed speed
R = return stroke

High-/Low-pressure circuit with two pumps

There are applications with one high-pressure pump and one low-pressure pump where the load pressure is used to automatically change the cylinder out-stroke speed from fast to slow. The DWPB-4N... unloading cartridge is used here to switch the low-pressure pump 'Off' i.e. to unloaded bypass. When the cylinder is in-stroked, the low-pressure pump is brought back on-load again, provided that the dynamic load pressure is less than the 'Off' pressure that has been set at the unloading cartridge.

IMPORTANT!

We strongly recommend that unloading cartridges with an on-off differential of 30 %…40 % be used in all applications of this type.

8 Ordering code

Ex. D | WP | B - 4 | N - 4 - 25 - S | 40 - _ - 2

D	=	pressure-control valve
WP	=	two-stage unloading cartridge
A ... Q	=	**standard model** - see relevant data sheets
Z ... R	=	special features - please consult BUCHER
2	=	pressure function 4 (pilot drain 2 and remote control port 1 external)
N	=	cavity type AN
4	=	nominal size 4
25	=	pressure range 50…250 bar
10	=	pressure range 20…100 bar
04	=	pressure range 10… 40 bar
S	=	screw adjuster (**standard**)
H	=	hand-knob adjuster
		On-off differential as % of Off (unload) pressure:
10	=	8…12 %
15	=	13…17 %
20	=	17…23 %
30	=	27…33 %
40	=	37…43 %
(blank)	=	NBR (Nitrile) seals (**standard**)
V	=	FKM (Viton) seals (special seals - please contact BUCHER)
1 ... 9	=	design stage (omit when ordering new units)

9 Related data sheets

Reference	(Old no.)	Description
400-P-040011	(i-32)	The form-tool hire programme
400-P-040191	(i-33.12)	Cavity type AN
400-P-720121	(G-4.30)	Line-mounting body, type GANA (G 3/8")

info.ch@bucherhydraulics.com www.bucherhydraulics.com

© 2020 by Bucher Hydraulics AG Frutigen, CH-3714 Frutigen
All rights reserved.
Data is provided for the purpose of product description only, and must not be construed as warranted characteristics in the legal sense. The information does not relieve users from the duty of conducting their own evaluations and tests. Because the products are subject to continual improvement, we reserve the right to amend the product specifications contained in this catalogue.

Classification: 430.305.315.305.305.355

Pressure Unloading Valve, Size 10

Q_{max} = 60 l/min, p_{max} = 315 bar
Two-stage, various on-off pressure differentials, optional soft-switching version
Series DWPA…, DWPBU…

- Compact construction for cavity type DD – M24 x 1,5
- Choice of 5 on-off differentials
- 3 pressure ranges available
- With integral pressure-relief function
- Optional soft-switching model is available
- All exposed parts with zinc-nickel plating
- Can be fitted in a line-mounting body

1 Description

Series DWPA… and DWPBU… cartridges are size 10, two stage, high performance pressure-unloading valves with an M24x1.5 mounting thread. They consist of a spool-type main stage and a leak-free, ball-type pilot stage. Unloading valves are used wherever a pump has to be disconnected from and re-connected to a pressure circuit. For this purpose, either the 'Off' pressure or the 'On' pressure of the cartridge can be set. When the 'Off' pressure is set, the 'On' point will depend on the selected percentage on-off differential, or the other way round. To disconnect the pump, the cartridge responds to rising pressures at ports A and X by opening the connection from A → B. This connection is then kept open until the selected percentage on-off differential is reached (falling pressure at port X) and the connection A → B closes again (the 'On' point). The changeover to unloaded bypass can be made less harsh (soft switching) by using the DWPBU… model with damped switching characteristics, which is available as an alternative. These unloading valves are predominantly used in accumulator-charging circuits, 2-pump systems, and circuits for fast-advance → feed changeover, and in such cases the cartridges also provide a pressure-relief function e.g. for protecting the pump (see the application examples). All external parts of the cartridge are zinc-nickel plated according to DIN EN ISO 19 598 and are thus suitable for use in the harshest operating environments. If you intend to manufacture your own cavities or are designing a line-mounting installation, please refer to the section “Related data sheets”.

2 Symbol

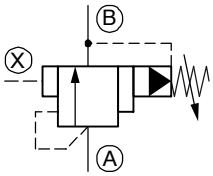

3 Technical data

General characteristics	Description, value, unit
Designation	pressure unloading cartridge valve
Design	two-stage, with manual adjustment, various on-off pressure differentials, optional soft-switching version
Mounting method	screw-in cartridge M24 x 1.5
Tightening torque	Can be fitted in steel 65 Nm ± 10 % Can be fitted in aluminium 50 Nm ± 10 %
Size	nominal size 10, cavity type DD

WWW.SUMY.IR

General characteristics	Description, value, unit
Weight	0.48 kg
Mounting attitude	unrestricted
Ambient temperature range	-25 °C … +80 °C

Hydraulic characteristics	Description, value, unit
Maximum operating pressure	315 bar
Maximum flow rate	60 l/min
Nominal pressure ranges	L = (40…110 bar), M = (80…210 bar), N = (180…315 bar)
On-off differentials [1)] (on-off differential from 'Off' (unload) pressure)	8 … 12 % (pressure ranges M and N only) 13 … 17 % 17 … 23 % 27 … 33 % 37 … 43 %
Flow direction	A → B, see symbols
Hydraulic fluid	HL and HLP mineral oil to DIN 51 524; for other fluids, please contact BUCHER
Hydraulic fluid temperature range	-25 °C … +80 °C
Viscosity range	10…650 mm^2/s (cSt), recommended 15...250 mm^2/s (cSt)
Minimum fluid cleanliness Cleanliness class to ISO 4406 : 1999	class 20/18/15

ATTENTION! [1)]
Any back-pressure in port B (tank) directly reduces the on-off pressure differential.
Recommended back-pressure ≤ 1 bar.

4 Performance graphs measured with oil viscosity 33 mm^2/s (cSt)

Δp = f (Q) Pressure drop - Flow rate characteristic
(for unloaded bypass, valve open)

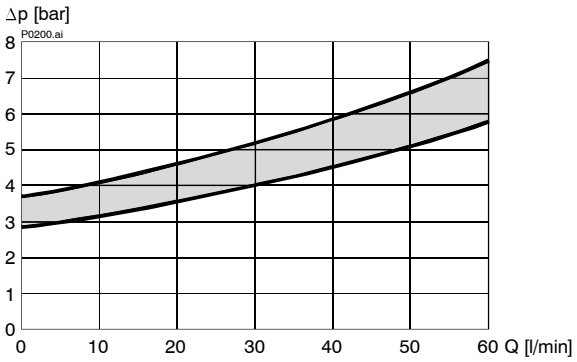

Δp = f (Q) Pressure drop - Flow rate characteristic
(pressure-relief function)

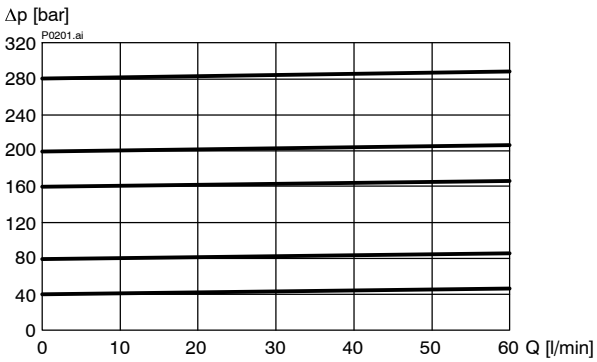

p = f (Q) Performance limits

On-off differential 8 … 12 %

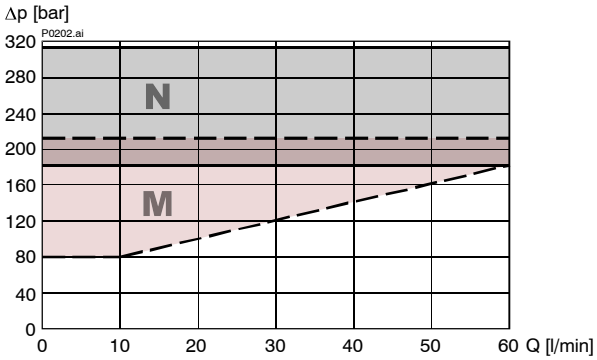

p = f (Q) Performance limits

On-off differential 13 … 17 % / 17 … 23 %

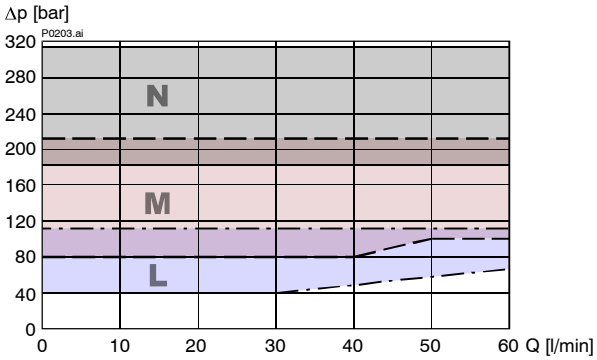

p = f (Q) Performance limits

On-off differential 27 … 33 % / 37 … 43 %

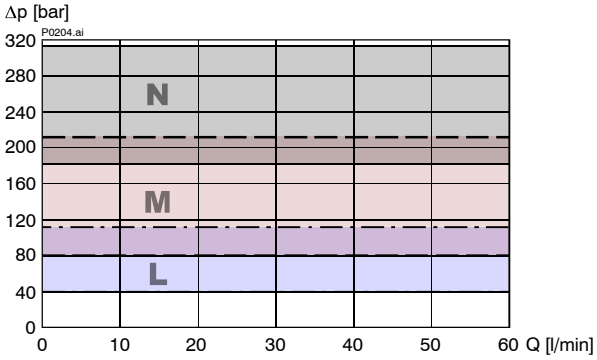

5 Dimensions & sectional view

Standard model: DWPA…

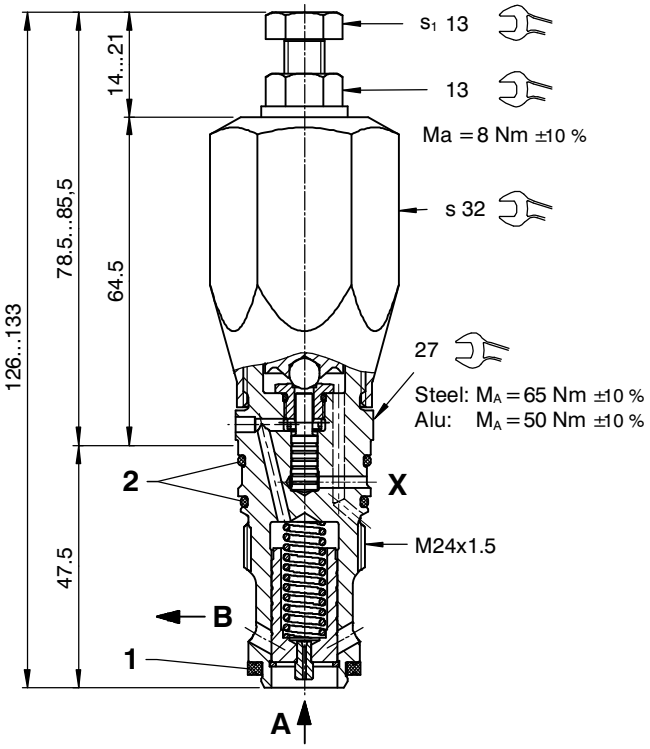

Model: DWPBU… (soft switching)

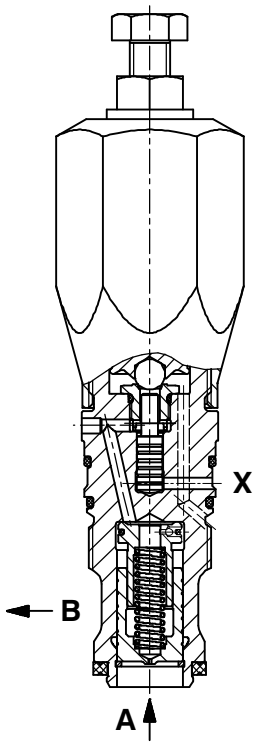

6 Installation information

IMPORTANT!
When fitting the cartridges, use the specified tightening torque. Set the switching point by means of the adjusting screw (s_1). Either set the 'Off' pressure, in which case the 'On' pressure will depend on the selected percentage on-off differential, or the other way around. After you have set the valve, lock the adjusting screw with the lock nut.

ATTENTION!
Type DWPBU-2… (soft switching) pressure-unloading cartridges are not suitable for use in applications with 2-pump systems or circuits for fast-advance → feed changeover.

ATTENTION!
Only qualified personnel with mechanical skills may carry out any maintenance work. Generally, the only work that should ever be undertaken is to check, and possibly replace, the seals. When changing seals, oil or grease the new seals thoroughly before fitting them.

Seal kit NBR no. DS-216-N [2)]

Item	Qty.	Description
1	1	Seal ring ∅ 22,10 / 16,50 x 2,50
2	2	O-ring no. 020 ∅ 21,95 x 1,78 N90

IMPORTANT!
2) Seal kit with FKM (Viton) seals, no. DS-216-V

7 Application examples

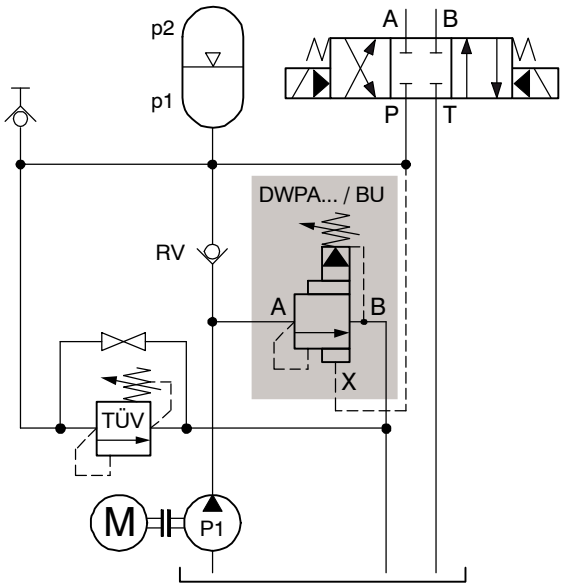

p1 = 'On' pressure
p2 = 'Off' pressure

Accumulator-charging circuit

In this application, the DWPA-2... unloading cartridge performs an automatic accumulator-charging function in response to the pressures at ports A and X. Here, the normal procedure is to use the adjusting screw to set the upper, 'Off' pressure p2, and when this pressure is reached the pump will therefore be switched over to unloaded bypass (connection A → B open). The 'Off' pressure p2 and the on-off differential (10...40 %) determine the lower, 'On' pressure p1. When demand causes the pressure in the accumulator circuit to fall to p1, the unloading cartridge closes the connection A → B and the pump supplies oil to the accumulator circuit until the 'Off' pressure p2 is reached and another 'unload' occurs.

IMPORTANT!
The changeover to unloaded bypass can be made less harsh (soft switching) by using the optional DWPBU-2... model.

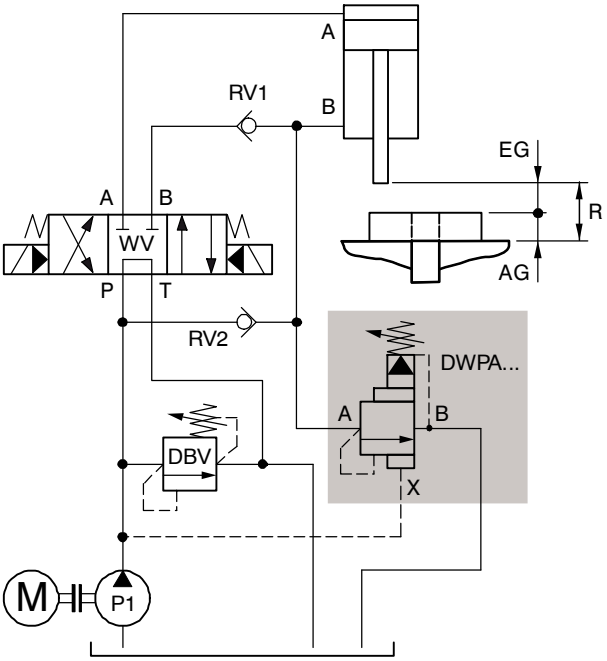

EG = fast-advance speed
AG = feed speed
R = return stroke

Pressure-dependent fast-advance → feed changeover with 1 pump

In this application, when the directional valve (WV) is in its parallel-arrows position, the unloading cartridge DWPA-2… remains closed until the valve pressure setting is reached, and oil discharging from the rod end of the cylinder is routed to the head end, where it supplements the pump delivery (fast-advance circuit). When the pressure at ports A and X rises above the setting, the unloading cartridge opens the connection A → B and the oil from the rod end flows to tank with virtually no back-pressure. This cancels the fast advance, and the cylinder's potential force is automatically increased (feed-speed circuit). The maximum force is limited by the pressure-relief valve (DBV) positioned on the primary side. When the directional valve (WV) is in its crossed-arrows position, the unloading cartridge is closed and the cylinder can be in-stroked again.

ATTENTION!
DWPBU-2… cartridges are not suitable for automatic fast-advance → feed changeover circuits.

IMPORTANT!
The changeover from fast to slow speed means a reduction in flow rate, which is often accompanied by a sharp drop in system pressure. We therefore recommend the use of unloading cartridges with an on-off differential of 20 %…40 %.

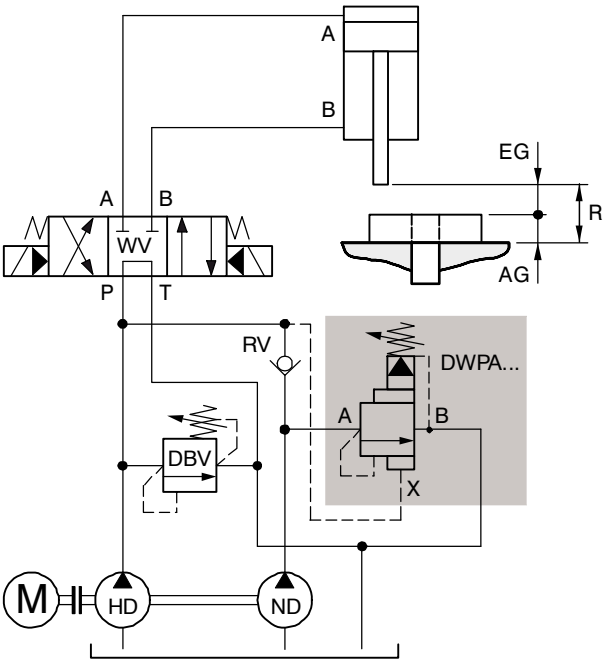

EG = fast-advance speed
AG = feed speed
R = return stroke

High-/Low-pressure circuit with two pumps

There are applications with one high-pressure pump and one low-pressure pump where the load pressure is used to automatically change the cylinder out-stroke speed from fast to slow. The DWPA-2... unloading cartridge is used here to switch the low-pressure pump 'Off' i.e. to unloaded bypass. When the cylinder is in-stroked, the low-pressure pump is brought back on-load again, provided that the dynamic load pressure is less than the 'Off' pressure that has been set at the unloading cartridge.

ATTENTION!
DWPBU-2… cartridges are not suitable for use in 2-pump systems.

IMPORTANT!
We strongly recommend that unloading cartridges with an on-off differential of 30 %…40 % be used in all applications of this type.

8 Ordering code

Ex. D | WP | A - 2 - 10 - S | N | _ | 40 - 1

D	=	pressure-control valve
WP	=	two-stage unloading cartridge
A ... Q	=	**standard model** - see relevant data sheets
Z ... R	=	special features - please consult BUCHER
BU	=	soft switching, damped switching characteristics (optional)
2	=	pressure function 2 (internal pilot-oil drain to B, with external remote-control port X)
10	=	nominal size 10
S	=	screw adjuster
N	=	pressure range 180…315 bar (Normal)
M	=	pressure range 80…210 bar (Medium)
L	=	pressure range 40…110 bar (Light)
(blank)	=	NBR (Nitrile) seals (**standard**)
V	=	FKM (Viton) seals (special seals - please contact BUCHER)
		On-off differential as % of Off (unload) pressure:
10	=	8…12 % (pressure ranges M and N only)
15	=	13…17 %
20	=	17…23 %
30	=	27…33 %
40	=	37…43 %
1 ... 9	=	design stage (omit when ordering new units)

9 Related data sheets

Reference	(Old no.)	Description
400-P-040011	(i-32)	The form-tool hire programme
400-P-060121	(i-45.2)	Cavity type DD
400-P-740111	(G-24.21)	Line- and manifold-mounting body, type DD-12 (G 1/2")

info.ch@bucherhydraulics.com www.bucherhydraulics.com

© 2021 by Bucher Hydraulics AG Frutigen, CH-3714 Frutigen
All rights reserved.
Data is provided for the purpose of product description only, and must not be construed as warranted characteristics in the legal sense. The information does not relieve users from the duty of conducting their own evaluations and tests. Because the products are subject to continual improvement, we reserve the right to amend the product specifications contained in this catalogue.

Classification: 430.305.315.305.320.355

BUCHER hydraulics
WWW.SUMY.IR

Pressure valve
Relief function

Q_{max} = 1.5 l/min, p_{max} = 420 bar
Direct acting, poppet type, proportional solenoid
Type series: DVSA-1L...

- Screw-in cartridge valve for cavity AL
- All external parts with zinc-nickel plating according to DIN EN ISO 19598
- Installation in threaded port body type GALA
- Seated pilot stage
- In a power failure, the pressure setting drops to the minimum value
- Can be used as a pilot valve
- The slip-on coil can be rotated, and it can be replaced without opening the hydraulic envelope
- Various plug-connector systems and voltages are available
- High pressure wet-armature solenoids

Symbol

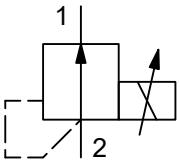

Description

These proportional pressure relief valves, series DVS_-1L..., are size 1 pilot valves featuring a seat-valve design and a 3/4-16 UNF mounting thread. With these pressure- relief valves, the relief pressure is dependent on the electrical control signal and can be continuously varied. When the solenoid is de-energized (initial position), connection 2 to 1 is open and the minimum pressure (free flow) depends on the flow rate. Any pressure at port 1 is additive to the valve setting at port 2, therefore port 1 should preferably be connected directly to tank. In control mode, the relief pressure is proportional to the change in the required value (amplifier output current). In order to obtain precise pressure settings over the whole of the required pressure range (optimum resolution); the pressure relief valves are available in five pressure levels. All external parts of the valves are zinc-nickel plated and are thus suitable for use in the harshest operating environments. The slip-on coils can be replaced without opening the hydraulic envelope and can be positioned at any angle

through 360°. These proportional pressure relief valves are primarily used as pilot valves, mainly in mobile and industrial applications to allow a pressure in hydraulic installations to be limited electro-proportionally. For self-assembly, please refer to the section related data sheets.

Technical data

General characteristics	Description, value, unit
Function group	pressure valve
Function	relief function
Design	screw-in cartridge valve
Controls	proportional solenoid
Characteristic	direct acting, poppet type
Construction size	NG 1
Thread size	3/4-16 UNF-2A
Mounting attitude	unrestricted (preferably vertical, coil down)
Weight	0.40 kg
Cavity acc. factory standard	AL
Tightening torque steel	40 Nm
Tightening torque aluminium	40 Nm
Tightening torque tolerance	± 10 %
Minimum ambient temperature	- 30 °C
Maximum ambient temperature	+ 50 °C
Surface protection	all external parts with zinc-nickel plating according to DIN EN ISO 19598
Sealing material	see ordering code
Seal kit order number	NBR: DS-355-N / FKM: DS-355-V

Hydraulic characteristics	Description, value, unit
Maximum operating pressure	420 bar
Restriction of the operating pressure	port 1 = max. 250 bar [1])
Maximum flow rate	1.5 l/min
Flow direction	see symbol
Hydraulic fluid	HL and HLP mineral oil according to DIN 51 524; other fluids on request!
Minimum fluid temperature	- 30 °C
Maximum fluid temperature	+ 70 °C
Viscosity range	15 ... 380 mm^2/s (cSt)
Recommended viscosity range	20 ... 130 mm^2/s (cSt)
Minimum fluid cleanliness (cleanlineless class according to ISO 4406:1999)	class 18/16/13
Nominal pressure range	nominal pressure range 040: ...40 bar nominal pressure range 100: ...100 bar nominal pressure range 160: ...160 bar nominal pressure range 250: ...250 ominal pressure range 350: ...350 bar

NOTE!
[1]) Please note that any tank or return-line pressures acting at port 1 are additive to the pressure setting at port 2.

WWW.SUMY.IR

Electric characteristics	Description, value, unit
Actuator type	solenoid coil
Solenoid coils type	D36
Supply voltage DC	12/24 V DC
Supply voltage tolerance	± 10 %
Control current	12 V = 0...1400 mA / 24 V = 0...750 mA
Nominal power consumption	27 W
Relative duty cycle	100 %
Coil resistance R	Cold value at 20° = 12 V = 5.8 Ω / 24 V = 21 Ω max. warm value = 12 V = 8.6 Ω / 24 V = 32 Ω
Response sensitivity with PWM	< 1 % I_N
Reproducibility with PWM	< 2 % p_N
Hysterese with PWM	2...4 % I_N
Reversal error with PWM	2...4 % I_N
Electrical connection coil	DIN EN 175301-803, 3-pole 2 P+E (IP 65)
Protection class solenoid coil to ISO 20 653 / EN 60 529	IP 65 / IP 67 / IP 69K, see “Ordering code” (with appropriate mating connector and proper fitting and sealing)

Performance graphs

measured with oil viscosity 33.0 mm²/s (cSt)

p = f (I) Pressure adjustment

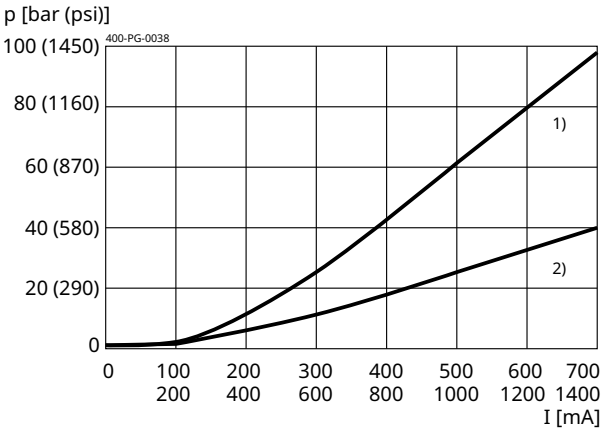

1) p_N 100 bar (1450 psi)
2) p_N 40 bar (580 psi)

p = f (I) Pressure adjustment

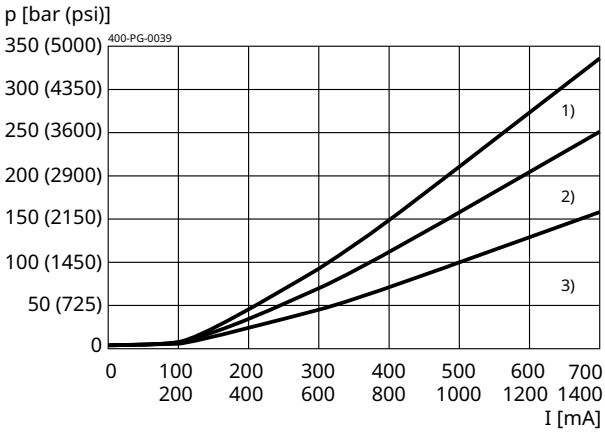

1) p_N 350 bar (5000 psi)
2) p_N 250 bar (3600 psi)
3) p_N 160 bar (2300 psi)

WWW.SUMY.IR

p = f (Q) Pressure-flow rate

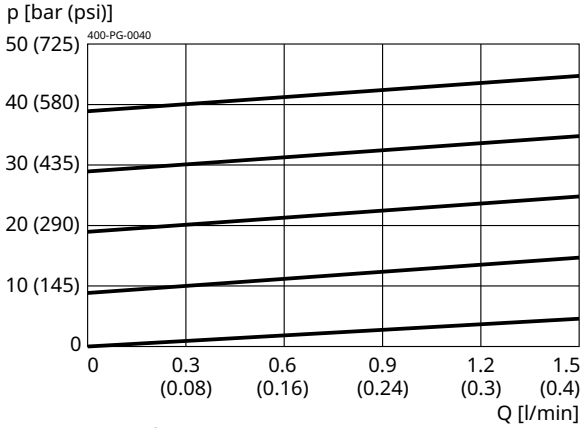

p_N = 40 bar (580 psi)

p = f (Q) Pressure-flow rate

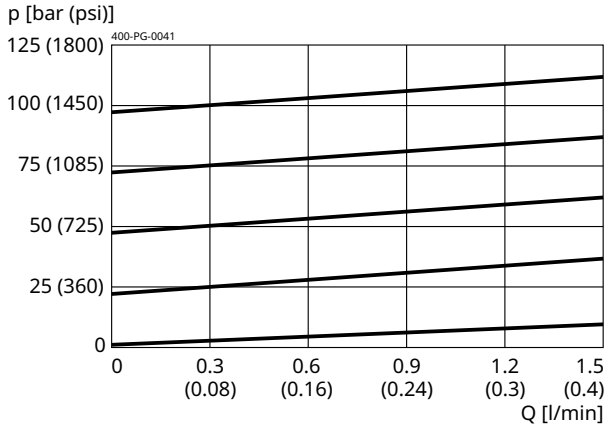

p_N = 100 bar (1450 psi)

p = f (Q) Pressure-flow rate

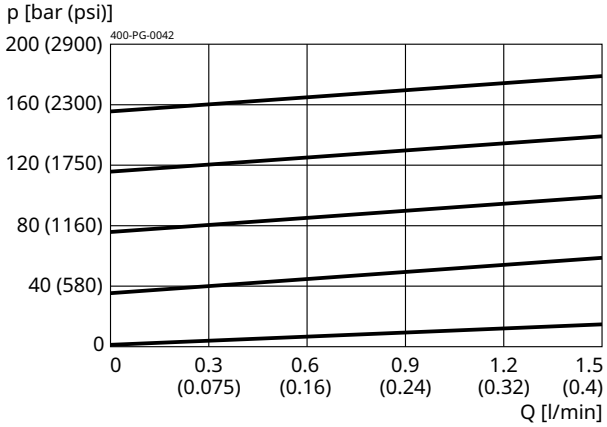

p_N = 160 bar (2300 psi)

p = f (Q) Pressure-flow rate

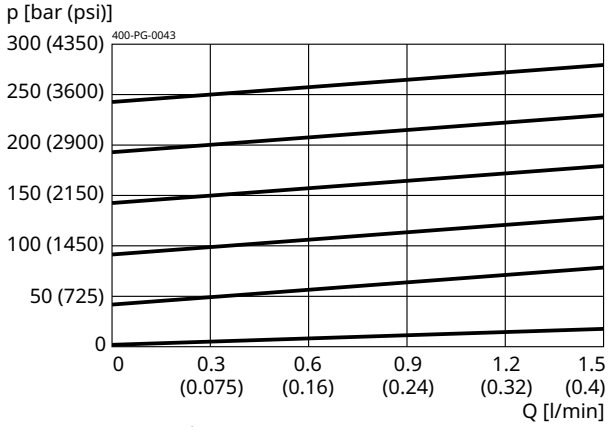

p_N = 250 bar (3600 psi)

p = f (Q) Pressure-flow rate

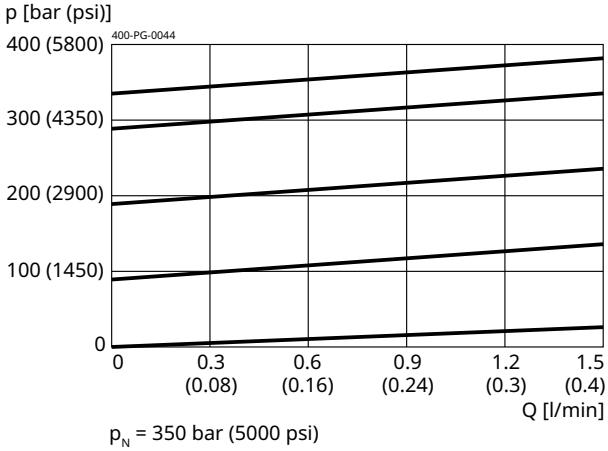

p_N = 350 bar (5000 psi)

Installation

Beispiel für die Masseinheit:
Example for the dimensional units:

0.79 = 0.79 mm millimeter
(.031) = 0.031'' inch

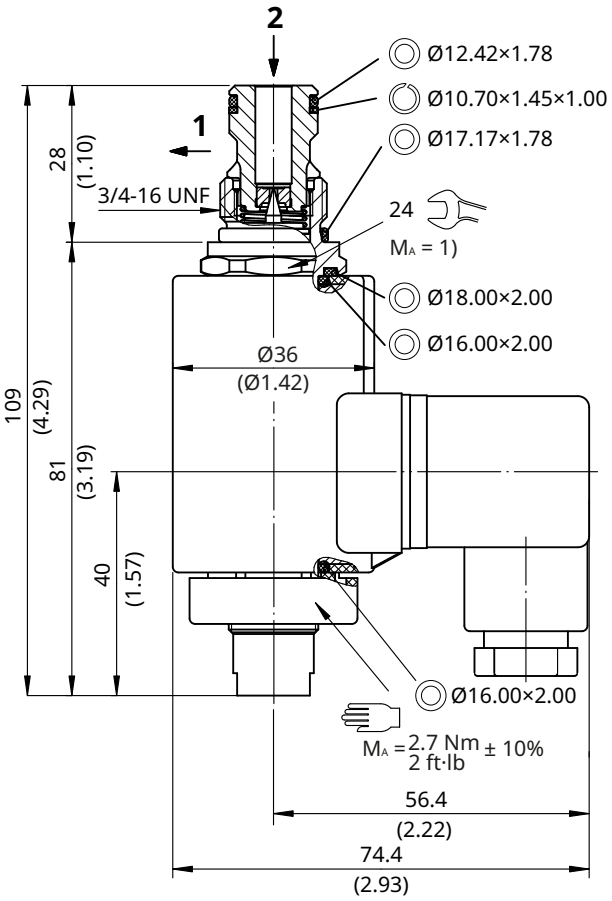

NOTE!
1) When fitting the screw-in cartridge valve, use the specified tightening torque. The value can be found in the chapter "Technical data".

IMPORTANT!
To achieve the screw-in valve's maximum performance rating, fit the solenoid coil as shown (with the plug pins nearest the valve body).

NOTE!
The seals are not available individually. The seal kit order number can be found in the chapter "Technical data".

ATTENTION!
Only qualified personnel with mechanical skills may carry out any maintenance work. Generally, the only work that should ever be undertaken is to check, and possibly replace, the seals. When changing seals, oil or grease the new seals thoroughly before fitting them.

Ordering code

Ex. D V S A - 1 L - 040 - 1 _ - 1 24 D _

D	=	pressure-control valve
V	=	pilot operated
S	=	electrically operated, D36
A ... Q	=	standard model according to valid data sheet
Z ... R	=	special model (on request)
1	=	pressure relief (with internal control oil outlet)
L	=	cavity type AL
040	=	pressure range ... 40 bar
100	=	pressure range ...100 bar
160	=	pressure range ...160 bar
250	=	pressure range ...250 bar
350	=	pressure range ...350 bar
1	=	nominal size 1 (primarily for pilot controls)
(blank)	=	NBR (nitril-butadien-rubber / BUNA) seals **(standard)**
V	=	FKM (fluorocarbon rubber / VITON) seals (special seals on request)
1...9	=	technical design no. (omit by ordering)
...	=	voltage e.g. 24 (24 V)
D	=	current DC

(blank)	=	DIN EN 175301-803 connection	3-pole 2 P+E **(standard)**	(IP 65)	with mating plug
T	=	DIN EN 175301-803 connection	3-pole 2 P+E, with protection diode	(IP 65)	with mating plug
M100	=	DIN EN 175301-803 connection	3-pole 2 P+E	(IP 65)	mating plug not supplied
J	=	Junior Timer plug connection	2-pole radial	(IP 65)	
JT	=	Junior Timer plug connection	2-pole radial, with protection diode	(IP 65)	
I	=	Junior Timer plug connection	2-pole axial	(IP 65)	
IT	=	Junior Timer plug connection	2-pole axial, with protection diode	(IP 65)	
D	=	Deutsch plug connection DT04-2P	2-pole 45°	(IP 67/69K)	
DT	=	Deutsch plug connection DT04-2P	2-pole 45°, with protection diode	(IP 67/69K)	
		other plug-variants, please consult BUCHER.			

IMPORTANT!
Not every combination of voltage values, current type and plug connections vailable.

Related data sheets

Reference	Description
400-P-040011	form tools
400-P-040171	cavity AL
400-P-120110	solenoid coil D36
400-P-720101	threaded port body GALA

info.ch@bucherhydraulics.com **www.bucherhydraulics.com**

© 2026 by Bucher Hydraulics AG Frutigen, 3714 Frutigen, Switzerland

All rights reserved.
Data is provided for the purpose of product description only, and must not be construed as warranted characteristics in the legal sense. The information does not relieve users from the duty of conducting their own evaluations and tests. Because the products are subject to continual improvement, we reserve the right to amend the product specifications contained in this catalogue.

WWW.SUMY.IR

Pressure valve
Relief function

Q_{max} = 1.5 l/min, p_{max} = 420 bar
Direct acting, poppet type, proportional solenoid with emergency override
Type series: DVSA-1LG...

- Screw-in cartridge valve for cavity AL
- All external parts with zinc-nickel plating according to DIN EN ISO 19598
- Installation in threaded port body type GALA
- Nominal pressure when solenoid de-energized (fail-safe function)
- Seated pilot stage
- Inverse-proportional design
- Can be used as a pilot valve
- With integral manual pressure setting
- High pressure wet-armature solenoids
- The slip-on coil can be rotated, and it can be replaced without opening the hydraulic envelope
- Various plug-connector systems and voltages are available

Symbol

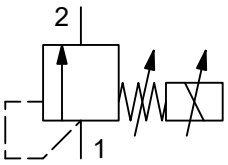

Description

The inverse-proportional pressure relief valves, series DVS_-1LG... are size 1, two stage, screw-in valves with a 3/4-16 UNF mounting thread. These direct acting screw-in valves control pressure in response to an electrical demand signal, enabling the maximum system pressure to be varied continuously and set at any desired level. When the solenoid is de-energized (initial position), the relief pressure is the nominal pressure of the applicable pressure range (fail-safe function). Any pressure at port 1 is additive to the valve setting at port 2, therefore port 1 should preferably be connected directly to tank. In control mode, the relief pressure is inversely proportional to the change in the required value (amplifier output current). In order to obtain precise pressure settings over the whole of the required pressure range (optimum resolution); the pressure relief cartridges are available in 5 pressure ranges. If a proportional solenoid is faulty, for example, the integral manual pressure setting enables the required pressure to be set mechanically. All external parts of the screw-in valves

WWW.SUMY.IR

are zinc-nickel plated and are thus suitable for use in the harshest operating environments. The slip-on coils can be replaced without opening the hydraulic envelope and can be positioned at any angle through 360°.

These valves are primarily used as pilot valves, mainly in mobile and industrial applications. For self-assembly, please refer to the section related data sheets.

Technical data

General characteristics	Description, value, unit
Function group	pressure valve
Function	relief function
Design	screw-in cartridge valve
Controls	proportional solenoid with emergency override
Characteristic	direct acting, poppet type
MTTFd value	150 years
Construction size	NG 1
Thread size	3/4-16 UNF-2A
Mounting attitude	unrestricted (preferably vertical, coil down)
Weight	0.40 kg
Cavity acc. factory standard	AL
Tightening torque steel	40 Nm
Tightening torque aluminium	40 Nm
Tightening torque tolerance	± 10 %
Minimum ambient temperature	- 30 °C
Maximum ambient temperature	+ 50 °C
Surface protection	all external parts with zinc-nickel plating according to DIN EN ISO 19598
Sealing material	see ordering code
Seal kit order number	NBR: DS-355-N / FKM: DS-355-V

WWW.SUMY.IR

Hydraulic characteristics	Description, value, unit
Maximum operating pressure	420 bar
Restriction of the operating pressure	port 1: max. 250 bar [1])
Maximum flow rate	1.5 l/min
Flow direction	see symbol
Hydraulic fluid	HL and HLP mineral oil according to DIN 51 524; other fluids on request!
Minimum fluid temperature	- 30 °C
Maximum fluid temperature	+ 70 °C
Viscosity range	15 ... 380 mm^2/s (cSt)
Recommended viscosity range	20 ... 130 mm^2/s (cSt)
Minimum fluid cleanliness (cleanlineless class according to ISO 4406:1999)	class 18/16/13
Nominal pressure range	nominal pressure range 040: ...40 bar nominal pressure range 100: ...100 bar nominal pressure range 160: ...160 bar nominal pressure range 250: ...250 ominal pressure range 350: ...350 bar

NOTE!
[1]) Please note that any tank or return-line pressures acting at port 1 are additive to the pressure setting at port 2.

Electric characteristics	Description, value, unit
Actuator type	solenoid coil
Solenoid coils type	D36
Supply voltage DC	12/24 V DC
Control current	12 V = 0...1400 mA / 24 V = 0...760 mA
Nominal power consumption	27 W
Relative duty cycle	100 %
Coil resistance R	Cold value at 20° = 12 V = 5.8 Ω / 24 V = 21 Ω max. warm value = 12 V = 8.6 Ω / 24 V = 32 Ω
Recommended PWM frequency	200 Hz
Response sensitivity with PWM	< 1 % I_N
Reproducibility with PWM	< 2 % p_N
Hysterese with PWM	2...4 % I_N
Reversal error with PWM	2...4 % I_N
Electrical connection coil	DIN EN 175301-803, 3-pole 2 P+E (IP 65)
Protection class solenoid coil to ISO 20 653 / EN 60 529	IP 65 / IP 67 / IP 69K, see “Ordering code” (with appropriate mating connector and proper fitting and sealing)

Performance graphs

measured with oil viscosity 33.0 mm²/s (cSt)

p = f (I) Pressure adjustment

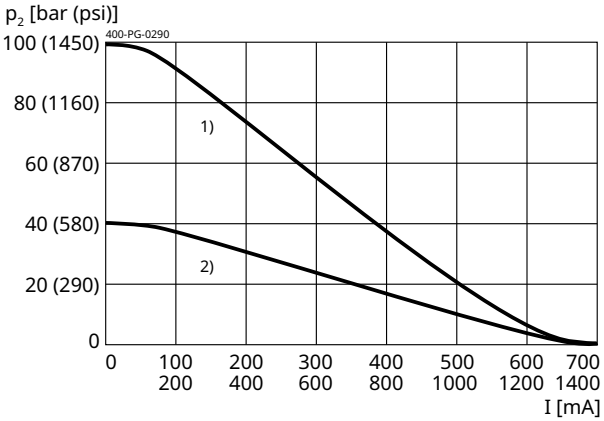

1) p_N 100 bar (1450 psi)
2) p_N 40 bar (580 psi)

p = f (I) Pressure adjustment

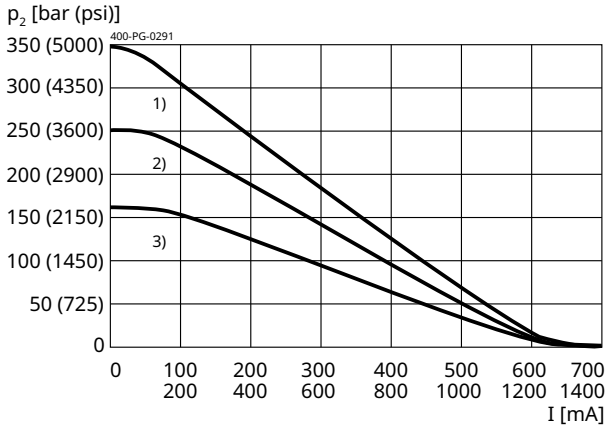

1) p_N 350 bar (5000 psi)
2) p_N 250 bar (3600 psi)
3) p_N 160 bar (2300 psi)

p = f (Q) Pressure-flow rate

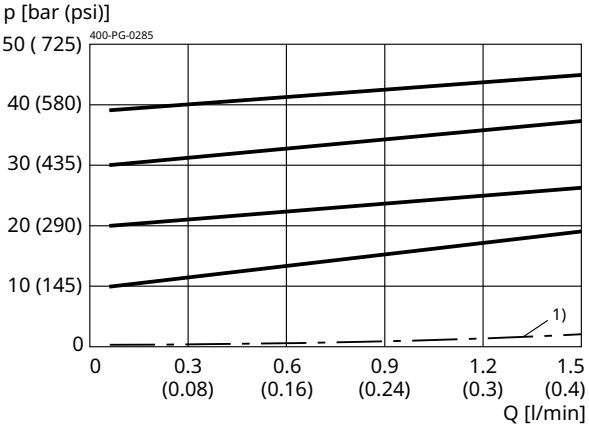

p_N = 40 bar (580 psi)
1) Einsatzgrenze, Application limit
(p min. / I = max. mA)

p = f (Q) Pressure-flow rate

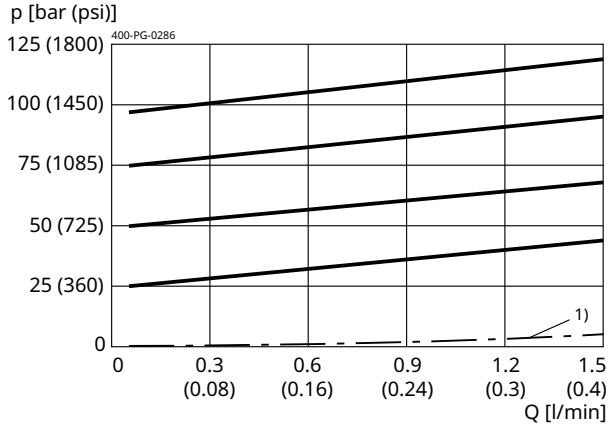

p_N = 100 bar (1450 psi)
1) Einsatzgrenze, Application limit
(p min. / I = max. mA)

p = f (Q) Pressure-flow rate

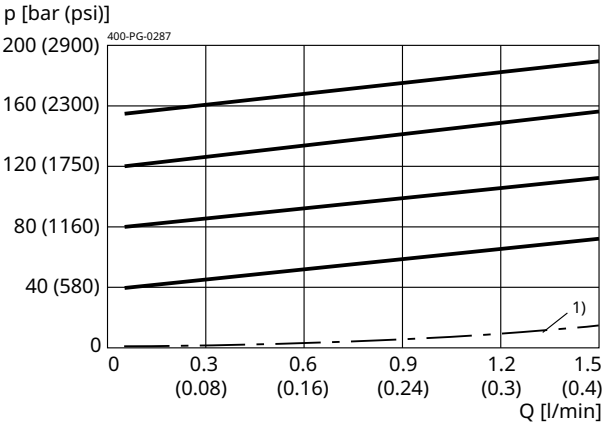

p_N = 160 bar (2300 psi)
1) Einsatzgrenze, Application limit
(p min. / I = max. mA)

p = f (Q) Pressure-flow rate

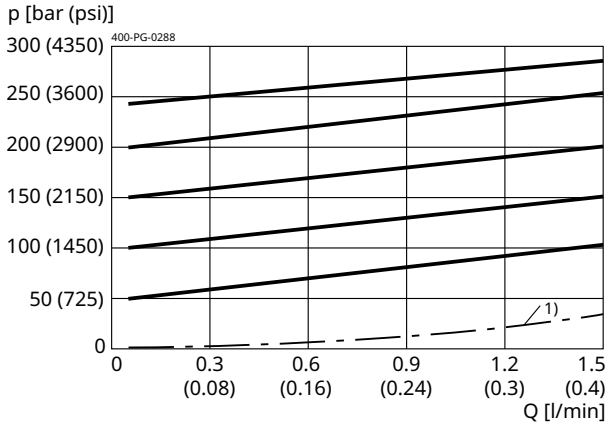

p_N = 250 bar
1) Einsatzgrenze, Application limit
(p min. / I = max. mA)

p = f (Q) Pressure-flow rate

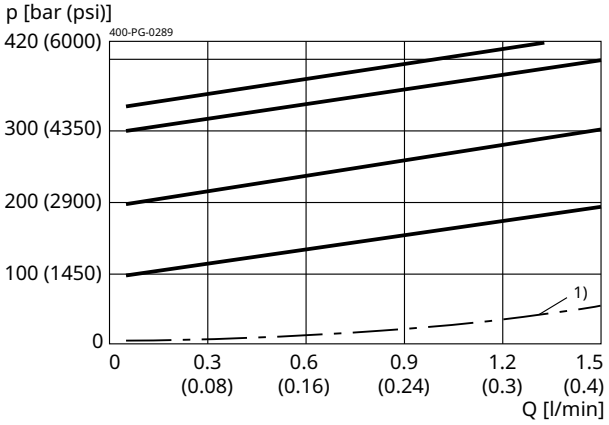

p_N = 350 bar (5000 psi)
1) Einsatzgrenze, Application limit
(p min. / I = max. mA)

Installation

Beispiel für die Masseinheit:
Example for the dimensional units:

0.79 = 0.79 mm millimeter
(.031) = 0.031" inch

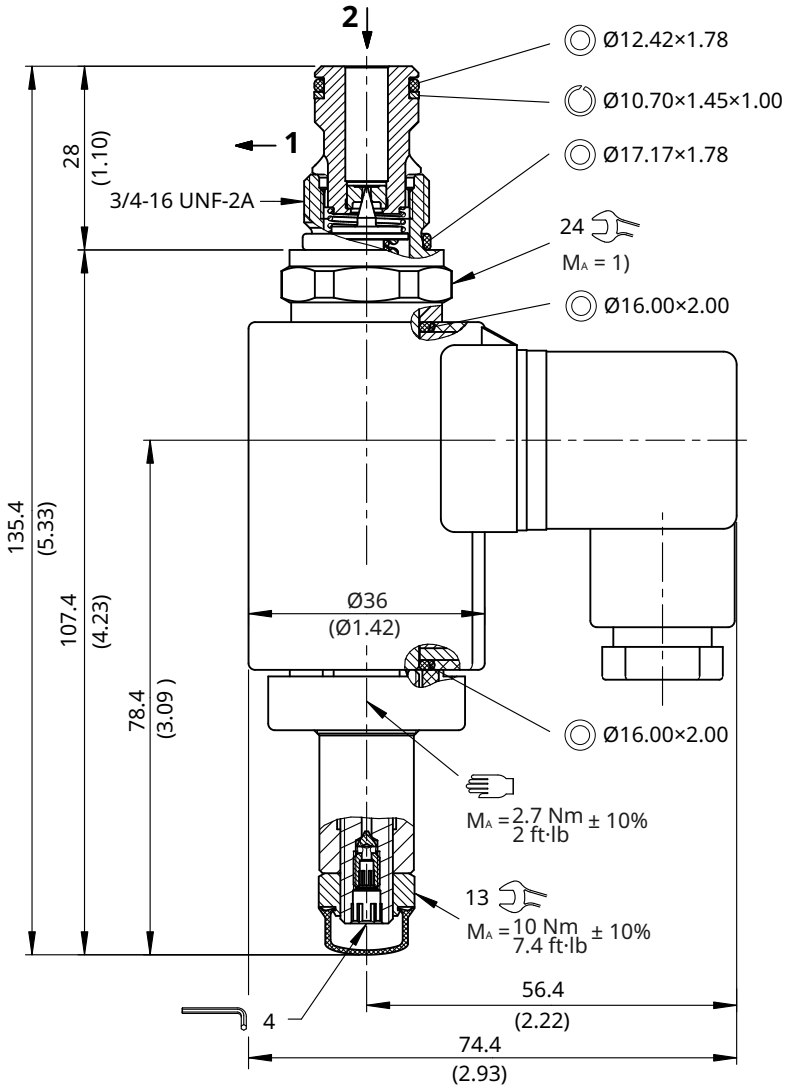

NOTE!
1) When fitting the screw-in cartridge valve, use the specified tightening torque. The value can be found in the chapter "Technical data".

NOTE!
To achieve the screw-in valve's maximum performance rating, fit the solenoid coil as shown (with the plug pins nearest the valve body).

NOTE!
The seals are not available individually. The seal kit order number can be found in the chapter "Technical data".

ATTENTION!
Only qualified personnel with mechanical skills may carry out any maintenance work. Generally, the only work that should ever be undertaken is to check, and possibly replace, the seals. When changing seals, oil or grease the new seals thoroughly before fitting them.

Emergency pressure setting

These inverse proportional pressure screw-in cartridge valves are equipped as standard with an integral manual pressure setting. If a proportional solenoid is faulty, for example, this manual pressure setting enables the required pressure to be set mechanically. The manual pressure setting can also be used to make minor pressure adjustments directly at the system. The following steps must be observed.

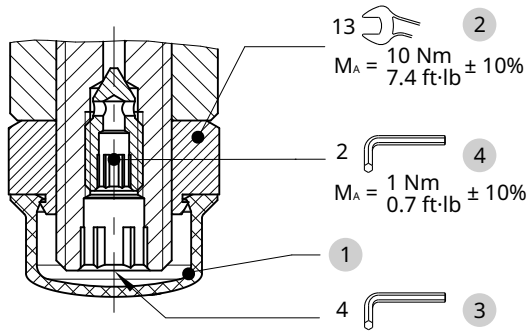

1. Remove the protective cap 1
2. Loosen the lock nut 2
3. Screw-in (turn to right) the adjusting spindle 3 until the required pressure is set.
4. Tighten the lock nut 2 to the specified torque.
5. Fit the protective cap 1

NOTE!
Any changes to the emergency pressure setting have a direct impact on the factory setting.

Reset to factory settings

To reset the proportional pressure-relief cartridges to their initial position (the factory setting), a constant flow rate and a pressure gauge that measures the pressure in the input port are needed. The pressure setting must not exceed the nominal pressure of the spring range in use. The following steps must be observed.

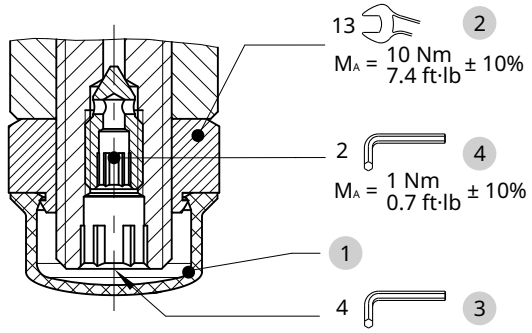

1. Ensure that the solenoid coil is de-energized
2. Remove the protective cap 1
3. Loosen the lock nut 2
4. Unscrew the adjusting spindle 3 to its end-stop
5. Screw-in the adjusting spindle 3 until the pressure on the gauge reaches the nominal pressure (pN) of the spring range in use
6. Tighten the lock nut 2 to the specified torque
7. Fit the protective cap 1

Air-bleeding

The integrated air-bleed screw allows the proportional pressure valves to be vented if necessary. If the screw-in valve is mounted as preferred (solenoid-coil hanging), it is self-venting. To vent the valve manually, follow the steps below.

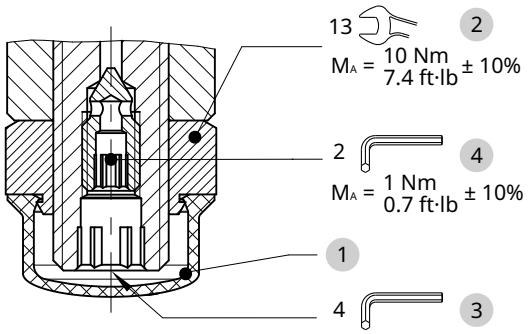

1. Remove the protective cap 1
2. Loosen the air-bleed screw 4 approx. 2 turns
3. Switch the valve ON/OFF several times until no more air bubbles escape
4. Tighten the air-bleed screw 4 to the specified torque
5. Fit the protective cap 1

Ordering code

Ex. D V S A - 1 L G - 040 - 1 _ - 1 24 D _

D	=	pressure-control valve
V	=	pilot operated
S	=	electrically operated, D36
A ... Q	=	standard model according to valid data sheet
Z ... R	=	special model (on request)
1	=	pressure relief (with internal control oil outlet)
L	=	cavity type AL
G	=	proportional solenoid, inverse type (pulling)
040	=	pressure range ... 40 bar
100	=	pressure range ...100 bar
160	=	pressure range ...160 bar
250	=	pressure range ...250 bar
350	=	pressure range ...350 bar
1	=	nominal size 1 (primarily for pilot controls)
(blank)	=	NBR (nitril-butadien-rubber / BUNA) seals **(standard)**
V	=	FKM (fluorocarbon rubber / VITON) seals (special seals on request)
1...9	=	technical design no. (omit by ordering)
...	=	voltage e.g. 24 (24 V)
D	=	current DC

(blank)	=	DIN EN 175301-803 connection	3-pole 2 P+E **(standard)**	(IP 65)	with mating plug
T	=	DIN EN 175301-803 connection	3-pole 2 P+E, with protection diode	(IP 65)	with mating plug
M100	=	DIN EN 175301-803 connection	3-pole 2 P+E	(IP 65)	mating plug not supplied
J	=	Junior Timer plug connection	2-pole radial	(IP 65)	mating plug not supplied
JT	=	Junior Timer plug connection	2-pole radial, with protection diode	(IP 65)	mating plug not supplied
I	=	Junior Timer plug connection	2-pole axial	(IP 65)	mating plug not supplied
IT	=	Junior Timer plug connection	2-pole axial, with protection diode	(IP 65)	mating plug not supplied
D	=	Deutsch plug connection DT04-2P	2-pole 45°	(IP 67/69K)	mating plug not supplied
DT	=	Deutsch plug connection DT04-2P	2-pole 45°, with protection diode	(IP 67/69K)	mating plug not supplied

other plug-variants, please consult BUCHER.

IMPORTANT!
Not every combination of voltage values, current type and plug connections vailable.

Related data sheets

Reference	Description
400-P-040011	form tools
400-P-040171	cavity AL
400-P-120110	solenoid coil D36
400-P-720101	threaded port body GALA
400-P-010101	MTTFd Values for Hydraulic Valves

info.ch@bucherhydraulics.com **www.bucherhydraulics.com**

© 2026 by Bucher Hydraulics AG Frutigen, 3714 Frutigen, Switzerland

All rights reserved.
Data is provided for the purpose of product description only, and must not be construed as warranted characteristics in the legal sense. The information does not relieve users from the duty of conducting their own evaluations and tests. Because the products are subject to continual improvement, we reserve the right to amend the product specifications contained in this catalogue.

Electrically Operated Pressure-Relief Cartridge, Size 1

Q_{max} = 1.5 l/min (0.4 gpm), p_{max} = 420 bar (6000 psi)
Pilot valve, seated design, direct acting, electrically operated
Series WUVB-1LO…

- Can be used as a pilot valve
- Compact construction for cavity type AL – 3/4-16 UNF to Bucher standard
- 2-pressure switching HI / LO
- High pressure wet-armature solenoids
- The slip-on coil can be rotated, and it can be replaced without opening the hydraulic envelope
- Various plug-connector systems and voltages are available
- All exposed parts with zinc-nickel plating
- Can be fitted in a line-mounting body

1 Description

Series WUVB-1LO… valves are size 1 electrically operated pressure relief cartridges with an 3/4-16 UNF mounting thread. They are direct acting seat valves and are preferably used as pilot valves. Using the external pressure adjustment, the higher pressure p1 (relief setting) and the lower pressure p2 (a secondary pressure, or the unloaded pressure) can be varied smoothly and independently of one another without opening the hydraulic envelope, and either pressure can be selected. The pressure-relief cartridges can be fittet in the AL cavity according to Bucher standard and also in some 3/4-16 UNF cavities from other valve manufacturers. To prevent any pressure surges, port 1 must be routed to tank with the least possible back-pressure. Any tank pressure acting at port 1 is additive to the pressure setting at the main port 2. All external parts of the cartridge are zinc-nickel plated to DIN 50 979 and are thus suitable for use in the harshest operating environments. The slip-on coils can be replaced without opening the hydraulic envelope and can be positioned at any angle through 360°. If you intend to manufacture your own cavities or are designing a line-mounting installation, please refer to the section “Related data sheets”.

2 Symbol

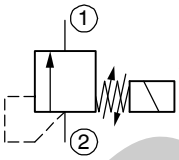

3 Technical data

General characteristics	Description, value, unit	
Designation	pressure-relief cartridge valve	
Design	seated design, direct acting, electrically operated	
Mounting method	screw-in cartridge 3/4-16 UNF	
Tightening torque	40 Nm ± 10 %	(30 ft-lbs ± 10 %)
Size	nominal size 1, cavity type AL to Bucher standard	
Weight	0.45 kg	(1.00 lb)
Mounting attitude	unrestricted	
Ambient temperature range	-25 °C … +50 °C	(-13 °F … +122 °F)

Phase Out

WWW.SUMY.IR

Hydraulic characteristics		Description, value, unit	
Maximum operating pressure	- main port 2 - port 1	420 bar 250 bar [1)]	(6000 psi) (3600 psi)
Pressure adjustment range:		420 bar 350 bar 250 bar 160 bar 100 bar 40 bar	(6000 psi) (5000 psi) (3600 psi) (2300 psi) (1400 psi) (570 psi)
Maximum flow rate		1.5 l/min	(0.40 gpm)
Flow direction		2 → 1, see symbols	
Hydraulic fluid		HL and HLP mineral oil to DIN 51 524; for other fluids, please contact BUCHER	
Hydraulic fluid temperature range		-25 °C … +80 °C	(-13 °F … +176 °F)
Viscosity range		10…500 mm^2/s (cSt), recommended 15...250 mm^2/s (cSt)	
Minimum fluid cleanliness Cleanliness class to ISO 4406 : 1999		class 20/18/15	

Electrical characteristics	Description, value, unit
Supply voltage	12 V DC, 24 V DC / 115 V AC, 230 V AC (50 … 60 Hz)
Supply voltage tolerance	± 10 %
Nominal power consumption	V DC = 27 W V AC = 25 W
Relative duty cycle	100 %
Protection class to ISO 20 653 / EN 60 529	IP 65 / IP 67 / IP 69K, see “Ordering code” (with appropriate mating connector and proper fitting and sealing)
Electrical connection	DIN EN 175301-803, 3-pin 2 P+E (standard) for other connectors, see “Ordering code”

ATTENTION!
[1)] Any residual- or surge-pressure in port 1 (tank pressure) is additive to the pressure setting in port 2.

Phase-Out

4 Performance graphs

measured with oil viscosity 33 mm²/s (cSt)

Δp = f (Q) Pressure-drop characteristic (420 bar)

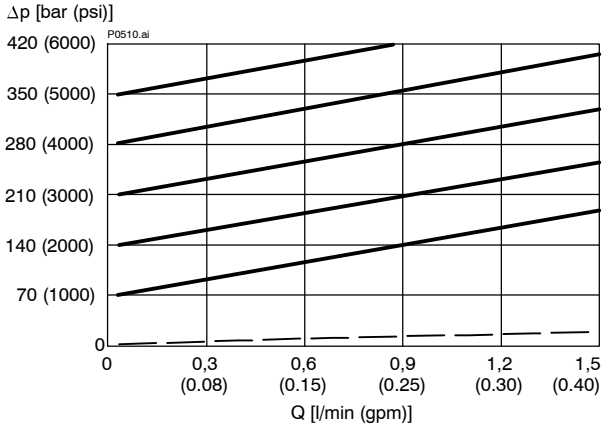

Δp = f (Q) Pressure-drop characteristic (350 bar)

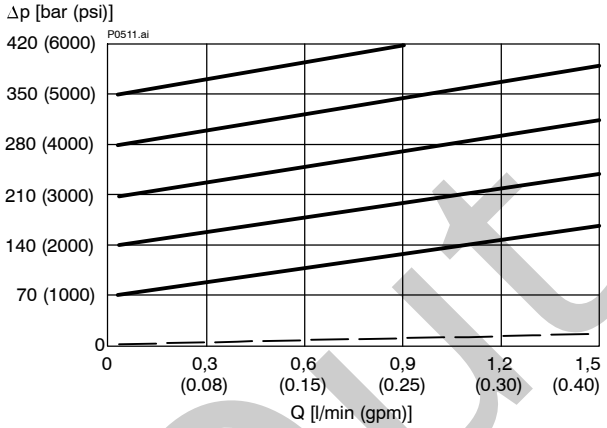

Δp = f (Q) Pressure-drop characteristic (250 bar)

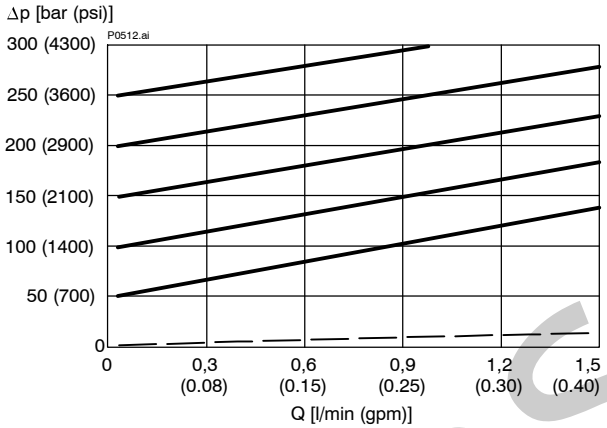

Δp = f (Q) Pressure-drop characteristic (160 bar)

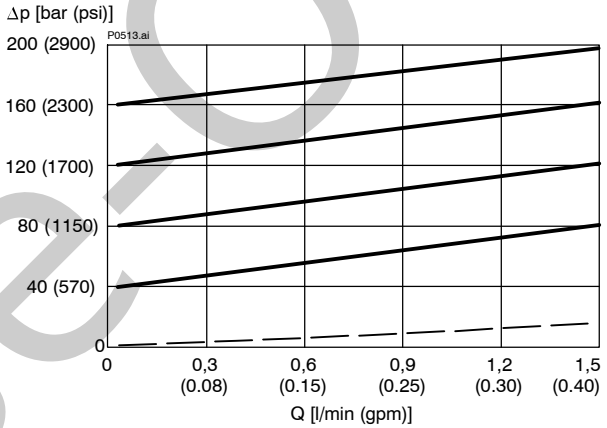

Δp = f (Q) Pressure-drop characteristic (100 bar)

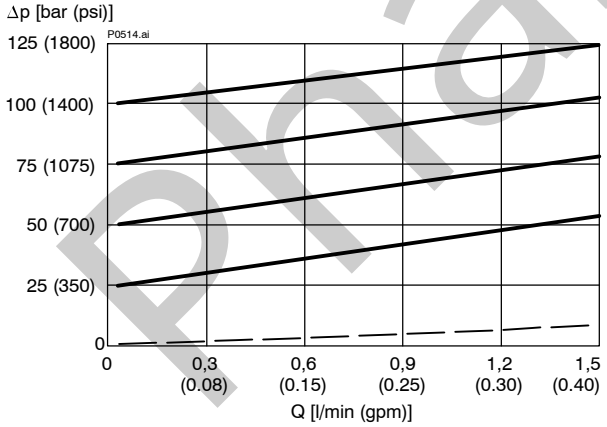

Δp = f (Q) Pressure-drop characteristic (40 bar)

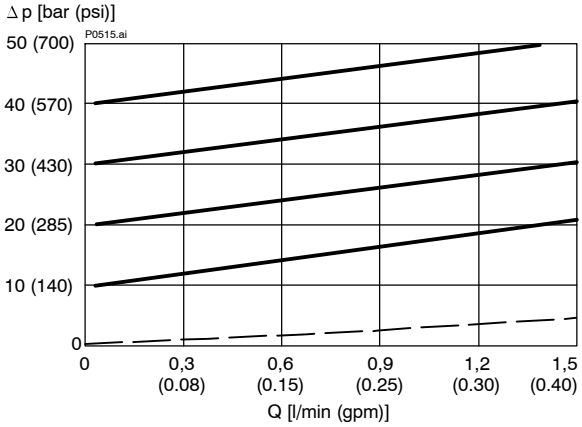

Phase-Out

5 Dimensions & sectional view

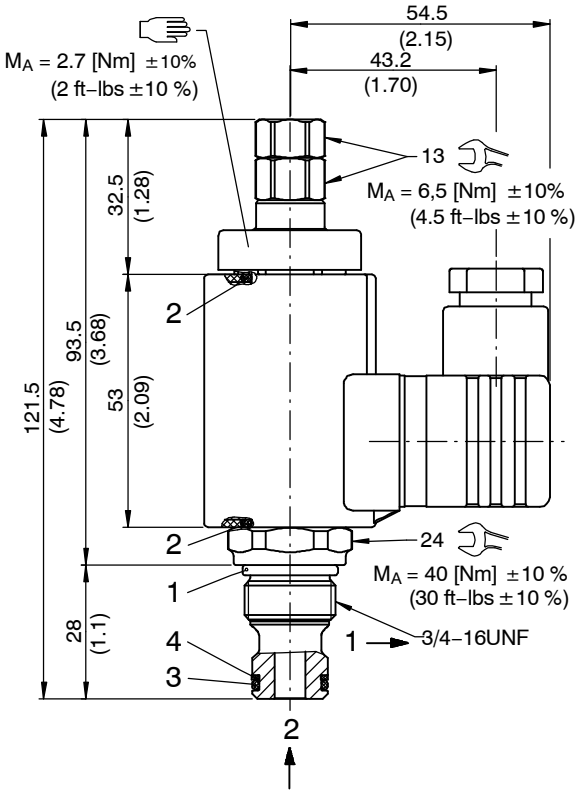

Seal kit NBR no. DS-317-N [2)]

Item	Qty.	Description			
1	1	O-ring	no. 017	∅ 17.17 x 1.78	N90
2	2	O-ring		∅ 16.00 x 2.00	Viton
3	1	O-ring	no. 014	∅ 12.42 x 1.78	N90
4	1	Backup ring		∅ 10.70 x 1.45 x 1.00	FI0751

IMPORTANT!

2) Seal kit with FKM (Viton) seals, no. DS-317-V

6 Installation information

IMPORTANT!
When fitting the cartridges, use the specified tightening torque.

ATTENTION!
Only qualified personnel with mechanical skills may carry out any maintenance work. Generally, the only work that should ever be undertaken is to check, and possibly replace, the seals. When changing seals, oil or grease the new seals thoroughly before fitting them.

Phase-Out

7 Pressure adjustment

(pressure p1 must be set first, followed by pressure p2)

Nr.	Setting the higher pressure p1 on series WUVB… as the higher working pressure with solenoid energised:
1)	Slacken and remove cap nut item A (13 A/F).
2)	Slacken lock nut item D (13 A/F) approx. ½ turn.
3)	With pump running and with the solenoid energised, use the two flats (7 A/F) to turn adjusting screw item B until the required pressure is set in port 2.
4)	Hold the adjusting screw item B using the 7 A/F flats while tightening the lock nut item D (13 A/F).
5)	Refit and tighten the cap nut item A.

Nr.	Setting the lower pressure p2 (emergency pressure setting) on series WUVB… (a second pressure or alternatively, unload) with solenoid de-energised:
1)	Slacken and remove cap nut item A (13 A/F).
2)	With pump running and with the solenoid de-energised, use the adjusting screw item C (2.5 A/F hex. socket) to set the pressure p2 in port 2.
3)	Refit and tighten the cap nut item A. (p2 min.: … 10 bar, dependent on flow).

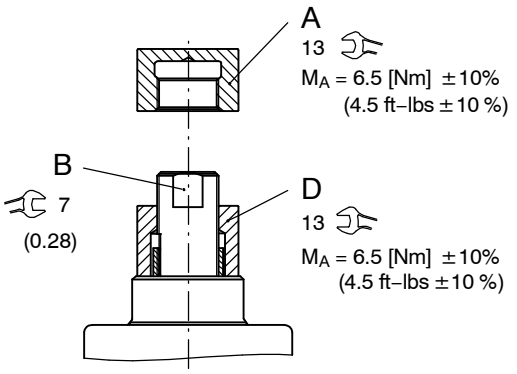

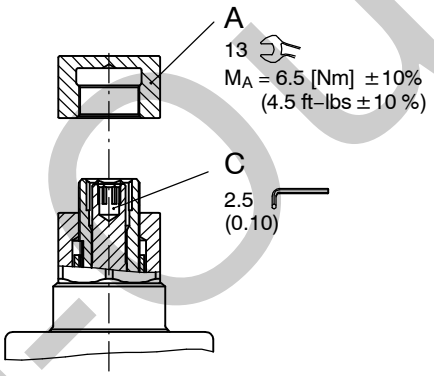

ATTENTION!
When setting pressure p1, adjusting screw item B must not be overtightened as this can damage the shoulder which limits the maximum pressure setting. As soon as a definite end-stop can be felt, do not turn any further.

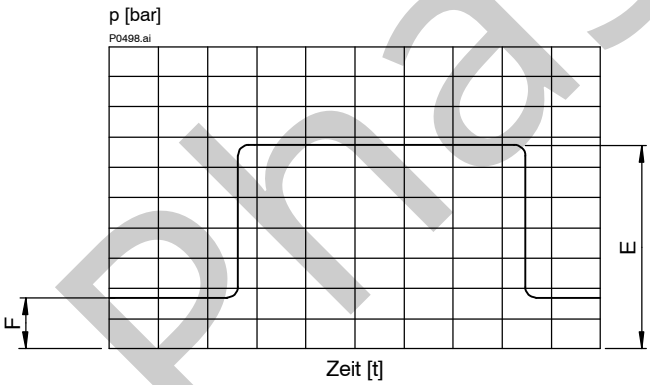

Example – showing the adjustable pressures p1 and p2:

E = pressure p1; as set with item B, solenoid energised
F = pressure p2, max. as E, adjustable at item C, solenoid de-energised

---

The relief pressure p1 is set as the higher working pressure (E) (solenoid energised)
p2 as the lower working pressure (F) (solenoid de-energised)

Phase-Out

8 Ordering code

Ex. WU V B - 1 L O - 35 - 1 _ - 1 24 D _

WU	=	electr. operated pressure-relief valve
V	=	pilot valve
B ... Q	=	standard model per relevant data sheet
Y ... R	=	special features - please consult BUCHER
1	=	pressure function 1 (pressure-relief)
L	=	cavity type AL
O	=	normally open
42	=	pressure range 10 … 420 bar
35	=	pressure range 10 … 350 bar
25	=	pressure range 10 … 250 bar
16	=	pressure range 10 … 160 bar
10	=	pressure range 10 … 100 bar
04	=	pressure range 10 … 040 bar
1	=	nominal size 1
(blank)	=	NBR (Nitrile) seals (**standard**)
V	=	FKM (Viton) seals (special seals - please contact BUCHER)
1 ... 9	=	design stage (omit when ordering new units)
...	=	voltage e.g. **24** (24 V)
D	=	current DC
A	=	current AC
(blank)	=	DIN EN 175301-803 connection with mating plug (**standard, IP 65**)
M100	=	DIN EN 175301-803 connection without mating plug
C	=	Kostal plug connection (IP 65)
JT	=	Junior Timer radial plug connection (with protection diode, IP65)
IT	=	Junior Timer axial plug connection (with protection diode, IP65)
D	=	Deutsch plug connection DT04-2P (IP 67/69K)
DT	=	Deutsch plug connection DT04-2P (with protection diode, IP 67/69K)
S	=	AMP Superseal 1.5 (IP67) / Metri-Pack 150 (IP65) plug connection
F	=	flying leads (500 mm)

mating plug not supplied

9 Related data sheets

Reference (Old no.)	Description
400-P-040011	The form-tool hire programme
400-P-040171	Cavity type AL
400-P-120110	Coils for screw-in cartridge valves
400-P-720101	Line- and manifold-mounting body, type GALA (G 3/8")

Phase-Out

info.ch@bucherhydraulics.com www.bucherhydraulics.com

© 2018 by Bucher Hydraulics AG Frutigen, CH-3714 Frutigen
All rights reserved.
Data is provided for the purpose of product description only, and must not be construed as warranted characteristics in the legal sense. The information does not relieve users from the duty of conducting their own evaluations and tests. Because the products are subject to continual improvement, we reserve the right to amend the product specifications contained in this catalogue.

Classification: 430.305.300.305.300.300

BUCHER hydraulics

WWW.SUMY.IR

Pressure valve
Relief function

Q_{max} = 30 l/min, p_{max} = 420 bar
direct acting, poppet type, mechanically adjustable
Type series: DDPC-1L-4-...

- Screw-in cartridge valve
- For cavity AL
- All external parts with zinc-nickel plating according to DIN EN ISO 19598
- Installation in threaded port body type GALA
- High flow rates
- Compact construction
- High-pressure damping ensures very stable operation
- Suitable for use as anti-shock valve

Description

The pressure relief valves, series DDP-1L-..., are size 4, direct acting, screw-in cartridge valves with a 3/4-16 UNF mounting thread. The poppet seat design ensures that the valves are leak-tight. The straightforward design delivers an outstanding price/performance ratio and good pressure/flow ratings. To obtain a reliable pressure setting over the entire pressure range, the overall pressure range is divided into different pressure levels. Each pressure range corresponds to a particular spring that allows a certain maximum operating pressure to be set. The pressure is set by means of an adjusting spindle. All external parts of the screw-in valves are zinc-nickel plated and are thus suitable for use in the harshest operating environments. These valves are mainly used in certain mobile and industrial applications to limit the system pressure. Please note that any tank or return-line pressures are additive to the setting. For self-assembly, please refer to the section related data sheets.

Symbol

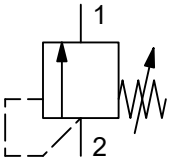

Technical data

General characteristics	Description, value, unit
Function group	Pressure valve
Function	Relief function
Design	Screw-in cartridge valve
Controls	mechanically adjustable
Characteristic	direct acting, poppet type
Construction size	NG 4
Thread size	3/4-16 UNF-2A
Mounting attitude	unrestricted
Weight	0.19 kg
Cavity acc. factory standard	For cavity AL
Tightening torque steel	50 Nm
Tightening torque aluminium	50 Nm
Tightening torque tolerance	± 10 %
Minimum ambient temperature	- 30 °C
Maximum ambient temperature	+ 80 °C
Surface protection	All external parts with zinc-nickel plating according to DIN EN ISO 19598
Sealing material	see ordering code
Seal kit order number	NBR: DS-350-N / FKM: DS-350-V

Hydraulic characteristics	Description, value, unit
Maximum operating pressure	420 bar
Restriction of the operating pressure	port 1: max. 250 bar [1])
Maximum flow rate	30 l/min
Flow direction	see symbol
Hydraulic fluid	HL and HLP mineral oil according to DIN 51 524; other fluids on request!
Minimum fluid temperature	- 30 °C
Maximum fluid temperature	+ 80 °C
Viscosity range	10 ... 650 mm^2/s (cSt)
Recommended viscosity range	15 ... 250 mm^2/s (cSt)
Minimum fluid cleanliness (cleanlineless class according to ISO 4406:1999)	class 20/18/15
Opening pressure	20 / 40 / 100 / 160 / 250 / 350 / 420 bar
Minimum set pressure	5 bar
Maximum set pressure	420 bar
Pressure adjustment range	pressure range 02: 1 turn = approx. 4 bar pressure range 04: 1 turn = approx. 8 bar pressure range 10: 1 turn = approx. 21 bar pressure range 16: 1 turn = approx. 32 bar pressure range 25: 1 turn = approx. 51 bar pressure range 35: 1 turn = approx. 70 bar pressure range 42: 1 turn = approx. 80 bar

NOTE!
[1]) Please note that any tank or return-line pressures acting at port 1 are additive to the pressure setting at port 2.

Performance graphs

measured with oil viscosity 33.0 mm²/s (cSt)

Δp = f (Q) Pressure drop-flow rate characteristic

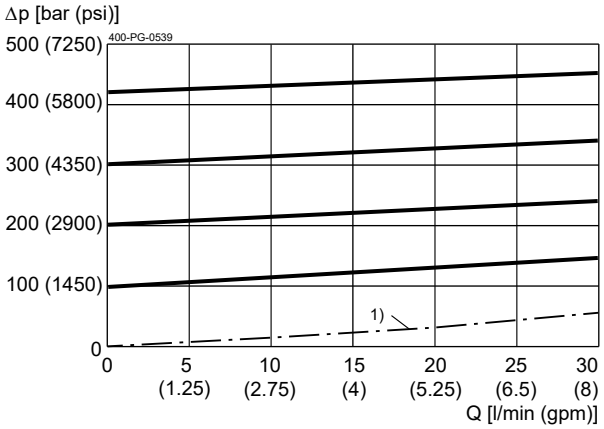

p_N = 420 bar (6000 psi)
1) = Application limit / minimum bypass pressure

Δp = f (Q) Pressure drop-flow rate characteristic

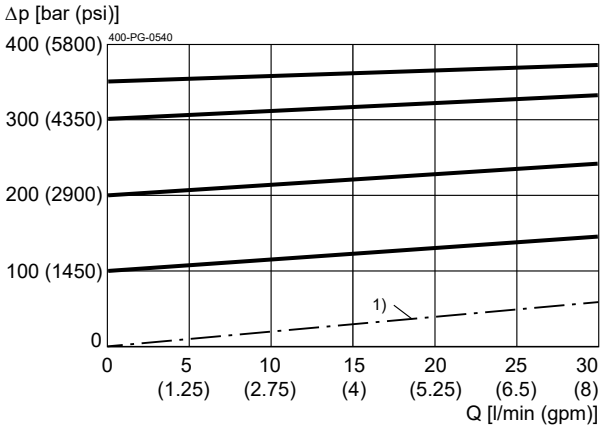

p_N = 350 bar (5000 psi)
1) = Application limit / minimum bypass pressure

Δp = f (Q) Pressure drop-flow rate characteristic

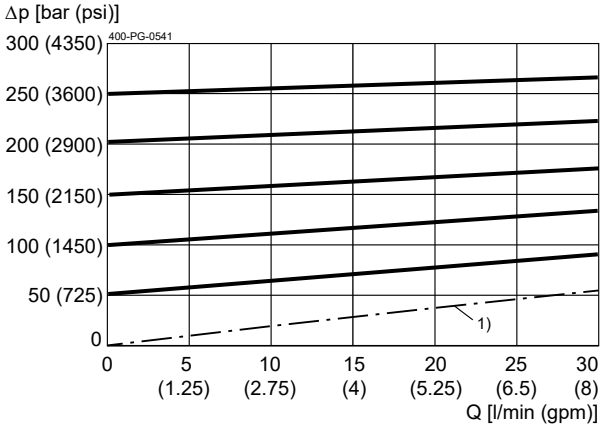

p_N = 250 bar (3600 psi)
1) = Application limit / minimum bypass pressure

Δp = f (Q) Pressure drop-flow rate characteristic

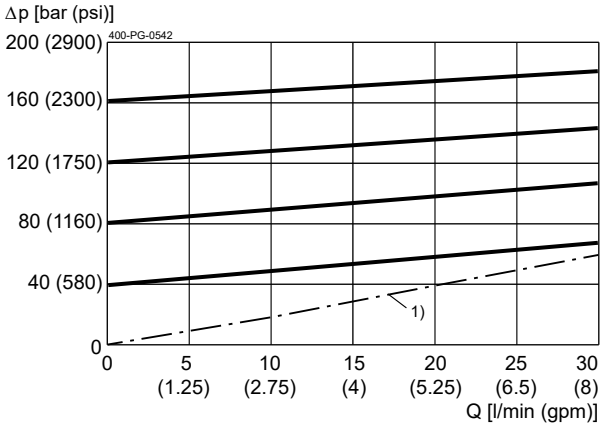

p_N = 160 bar (2300 psi)
1) = Application limit / minimum bypass pressure

Δp = f (Q) Pressure drop-flow rate characteristic

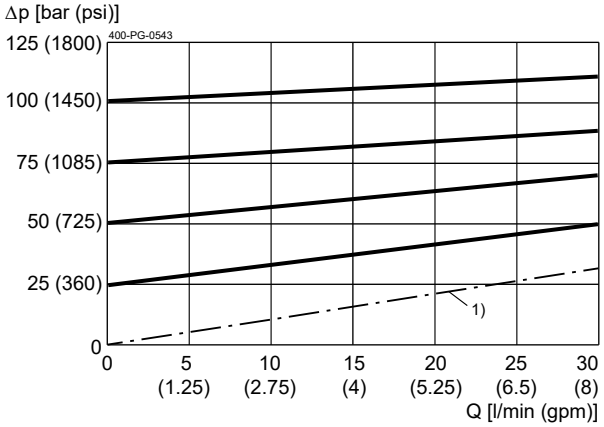

p_N = 100 bar (1450 psi)
1) = Application limit / minimum bypass pressure

Δp = f (Q) Pressure drop-flow rate characteristic

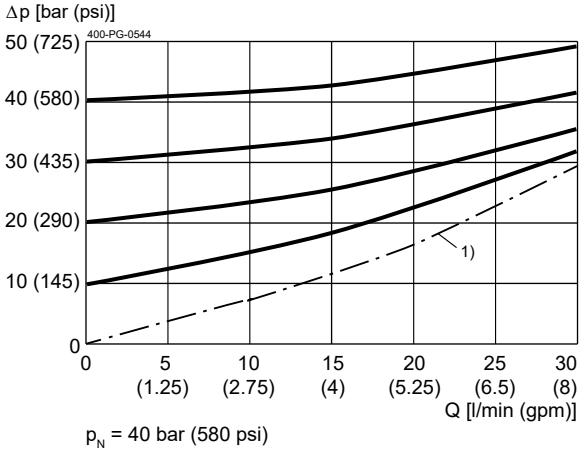

p_N = 40 bar (580 psi)
1) = Application limit / minimum bypass pressure

Δp = f (Q) Pressure drop-flow rate characteristic

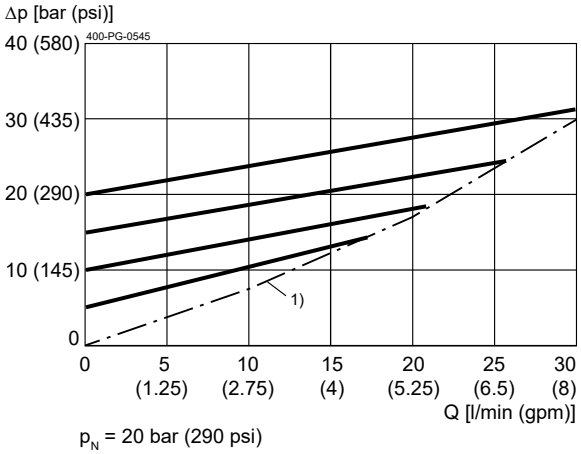

p_N = 20 bar (290 psi)
1) = Application limit / minimum bypass pressure

WWW.SUMY.IR

Dimensions and sectional view

Beispiel für die Masseinheit:
Example for the dimensional units:

0.79 = 0.79 mm millimeter
(.031) = 0.031" inch

Version "S": Einstellschraube *(Standard)*
Version "S": adjustment screw (standard)

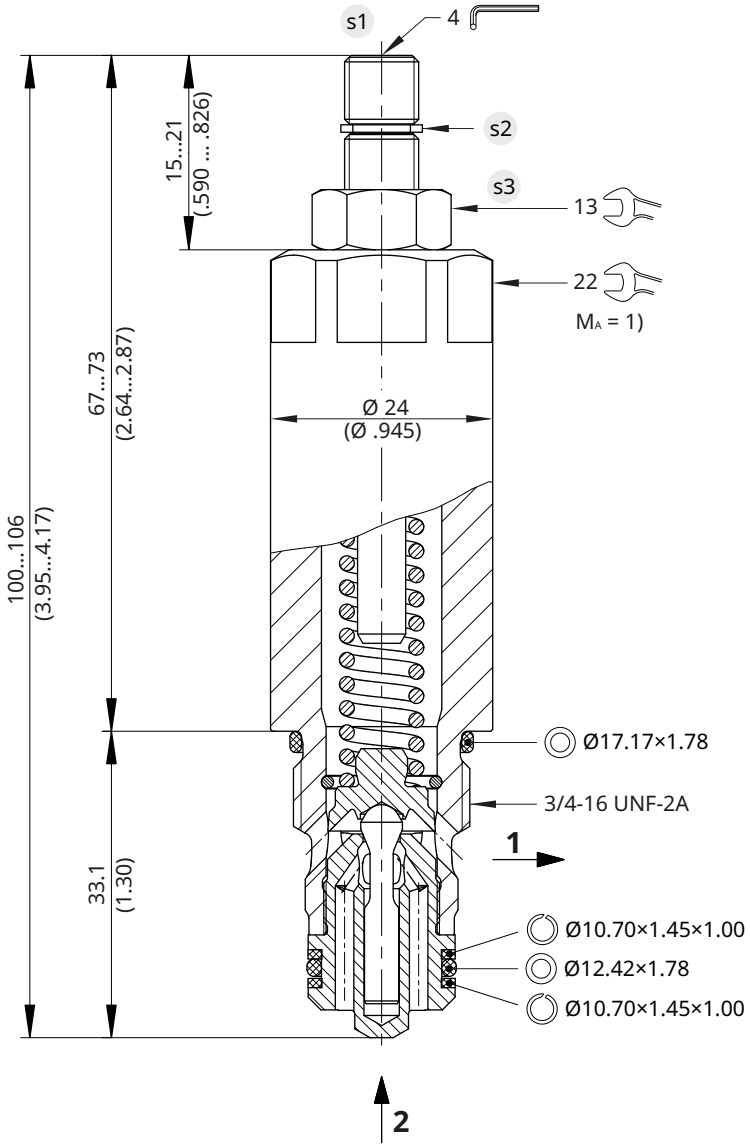

Version "H": Einstellschraube mit Handrad
Version "H": adjustment screw with handknob

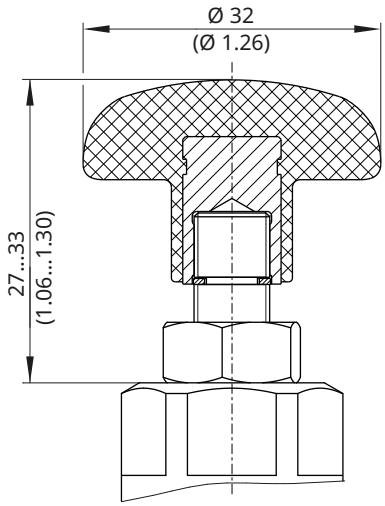

Einstellschraube mit Sicherungskappe
adjustment screw with tamper-proof cap

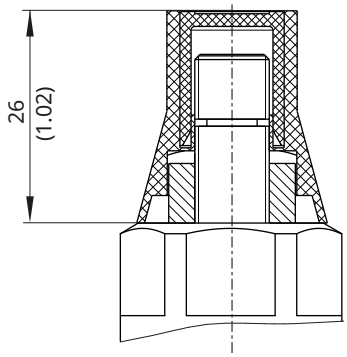

Installation information

ATTENTION!
Only qualified personnel with mechanical skills may carry out any maintenance work. Generally, the only work that should ever be undertaken is to check, and possibly replace, the seals. When changing seals, oil or grease the new seals thoroughly before fitting them.

NOTE!
Set the required pressure with the adjusting screw s1 . After you have set the valve, lock the adjusting screw s1 with the lock nut.

NOTE!
1) When fitting the screw-in cartridge valve, use the specified tightening torque. The value can be found in the chapter "Technical data".

WWW.SUMY.IR

NOTE!
Valve settings can be sealed by fitting the tamper-proof cap. To fit the cap, the snap ring s2 has to be removed. Subsequent adjustment is only possible by destroying the tamper-proof cap.

NOTE!
The seals are not available individually. The seal kit order number can be found in the chapter "Technical data".

Ordering code

Ex. D D P C - 1 L - 4 - 02 - S N - 2

D = pressure valve
D = relief-function, direct acting
P = cartridge design
A ... Q = standard model according to valid data sheet
Z ... R = special model (on request)
1 = pressure relief with internal spring space relief
L = cavity type AL
4 = nominal size 4
02 = pressure range 5 ... 20 bar / 70...290 psi
04 = pressure range 10 ... 40 bar / 145...580 psi
10 = pressure range 25...100 bar / 360...1450 psi
16 = pressure range 40...160 bar / 580...2300 psi
25 = pressure range 50...250 bar / 725...3600 psi
35 = pressure range 100...350 bar / 1450...5000 psi
42 = pressure range 100...420 bar / 1450...6000 psi
S = adjustment screw with internal hexagon **(standard)**
H = adjustment screw with hand knob
N = NBR (nitril-butadien-rubber / BUNA) seals **(standard)**
V = FKM (fluorocarbon rubber / VITON) seals (special seals on request)
1...9 = technical design no. (omit by ordering)

NOTE!
When required the tamper-proof cap (seal) for the adjustment screw must be ordered separately in plain language.

Related data sheets

Reference	Description
400-P-040011	Form tools
400-P-040171	Cavity AL
400-P-720101	Threaded port body GALA

info.ch@bucherhydraulics.com **www.bucherhydraulics.com**

© 2026 by Bucher Hydraulics AG Frutigen, 3714 Frutigen, Switzerland

All rights reserved.
Data is provided for the purpose of product description only, and must not be construed as warranted characteristics in the legal sense. The information does not relieve users from the duty of conducting their own evaluations and tests. Because the products are subject to continual improvement, we reserve the right to amend the product specifications contained in this catalogue.

WWW.SUMY.IR

Pressure valve
Relief function

Q_{max} = 24 l/min, p_{max} = 300 bar
Direct acting, spool type, proportional solenoid with emergency override
Type series: DBDSB-1L-...

- Screw-in cartridge valve for cavity AL
- All external parts with zinc-nickel plating according to DIN EN ISO 19598
- Installation in threaded port body type GALA
- With integral manual pressure setting
- High pressure wet-armature solenoids
- The slip-on coil can be rotated, and it can be replaced without opening the hydraulic envelope
- Various plug-connector systems and voltages are available

Symbol

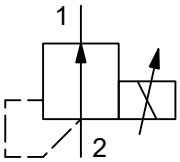

Description

The proportional pressure-relief valves, series DBDSB-1L..., are size 2, direct acting screw-in valves of sliding-spool design with a 3/4-16-UNF mounting thread. The relief pressure is dependent on the electrical control current and can be continuously varied. When the solenoid is de-energized (initial position), connection 2 to 1 is open and the minimum pressure (free flow) depends on the flow rate. Any pressure at port 1 is additive to the valve setting at port 2, therefore port 1 should preferably be connected directly to tank. In control mode, the relief pressure is proportional to the change in the required value (amplifier output current). In order to obtain precise pressure settings over the whole of the required pressure range (optimum resolution); the pressure relief valves are available in six spring ranges. If a proportional solenoid is faulty, for example, the integral manual pressure setting enables the required pressure to be set mechanically. All external parts of the screw-in valves are zinc-nickel plated and are thus suitable for use in the harshest operating environments. The slip-on coils can be replaced without opening the hydraulic envelope and can be positioned at any angle through 360°. Proportional pressure-relief valves are predominantly used in mobile and industrial applications to allow a pressure in hydraulic installations to be limited electro-

proportionally. For self-assembly, please refer to the section related data sheets.

Technical data

General characteristics	Description, value, unit
Function group	pressure valve
Function	relief function
Design	screw-in cartridge valve
Controls	proportional solenoid with emergency override
Characteristic	direct acting, spool type
MTTFd value	150 years
Construction size	NG 04
Thread size	3/4-16 UNF-2A
Mounting attitude	unrestricted (preferably vertical, coil down)
Weight	0.45 kg
Cavity acc. factory standard	AL
Tightening torque steel	40 Nm
Tightening torque aluminium	40 Nm
Tightening torque tolerance	± 10 %
Minimum ambient temperature	- 30 °C
Maximum ambient temperature	+ 50 °C
Surface protection	all external parts with zinc-nickel plating according to DIN EN ISO 19598
Sealing material	see ordering code
Seal kit order number	NBR: DS-284-N / FKM: DS-284-V

WWW.SUMY.IR

Hydraulic characteristics	Description, value, unit
Maximum operating pressure	300 bar
Restriction of the operating pressure	port 1 = max. 250 bar [1])
Maximum flow rate	24 l/min
Flow direction	see symbol
Hydraulic fluid	HL and HLP mineral oil according to DIN 51 524; other fluids on request!
Minimum fluid temperature	- 30 °C
Maximum fluid temperature	+ 70 °C
Viscosity range	15 ... 380 mm^2/s (cSt)
Recommended viscosity range	20 ... 130 mm^2/s (cSt)
Minimum fluid cleanliness (cleanliness class according to ISO 4406:1999)	class 18/16/13
Nominal pressure range	nominal pressure range 018: ...18 bar nominal pressure range 045: ...45 bar nominal pressure range 070: ...70 bar nominal pressure range 110: ...110 bar nominal pressure range 160: ...160 bar nominal pressure range 250: ...250 bar
Internal leakage flow rate	nominal pressure range 018: ...0.10 l/min nominal pressure range 045: ...0.10 l/min nominal pressure range 070: ...0.15 l/min nominal pressure range 110: ...0.20 l/min nominal pressure range 160: ...0.25 l/min nominal pressure range 250: ...0.25 l/min

NOTE!
[1]) Please note that any tank or return-line pressures acting at port 1 are additive to the pressure setting at port 2.

WWW.SUMY.IR

Electric characteristics	Description, value, unit
Actuator type	solenoid coil
Solenoid coils type	D36
Supply voltage DC	12 V DC 24 V DC
Control current	12 V = 0...1400 mA 24 V = 0...700 mA
Nominal power consumption	27 W
Switching time	20 ... 60 ms (Solenoid ON) 6 ... 20 ms (Solenoid OFF) These times are strongly influenced by fluid pressure, flow rate and viscosity, as well as by the dwell time under pressure
Relative duty cycle	100 %
Coil resistance R	Cold value at 20° - 12 V = 5.8 Ω / 24 V = 21 Ω max. warm value - 12 V = 8.6 Ω / 24 V = 32 Ω
Recommended PWM frequency	200 Hz
Response sensitivity with PWM	< 1 % I_{max}
Reproducibility with PWM	< 2 % Q_{nenn}
Hysteresis with PWM	2...4 % I_{max}
Reversal error with PWM	2...4 % I_{max}
Electrical connection coil	DIN EN 175301-803, 3-pole 2 P+E (IP 65)
Protection class solenoid coil to ISO 20 653 / EN 60 529	IP 65 / IP 67 / IP 69K, see Ordering code (with appropriate mating connector and proper fitting and sealing)

Performance graphs

measured with oil viscosity 33.0 mm²/s (cSt)

p = f (I) Pressure adjustment

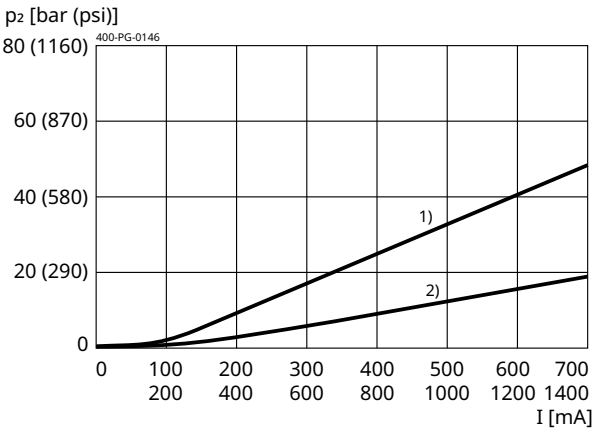

Q = 1 l/min
1) = pN 45 bar (650 psi)
2) = pN 18 bar (260 psi)

p = f (I) Pressure adjustment

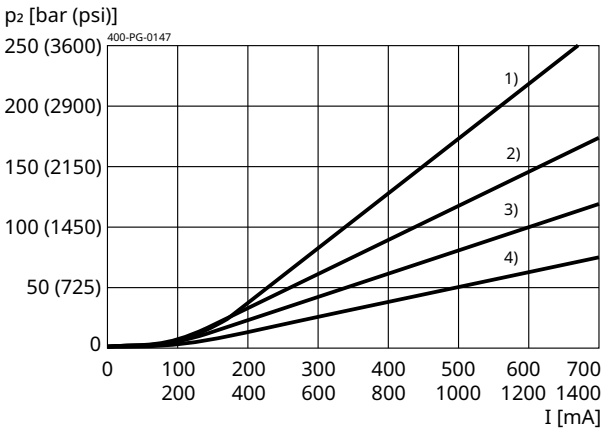

Q = 1 l/min
1) = pN 250 bar (3600 psi)
2) = pN 160 bar (2300 psi)
3) = pN 110 bar (1600 psi)
4) = pN 70 bar (1000 psi)

p = f (Q) Pressure-flow rate

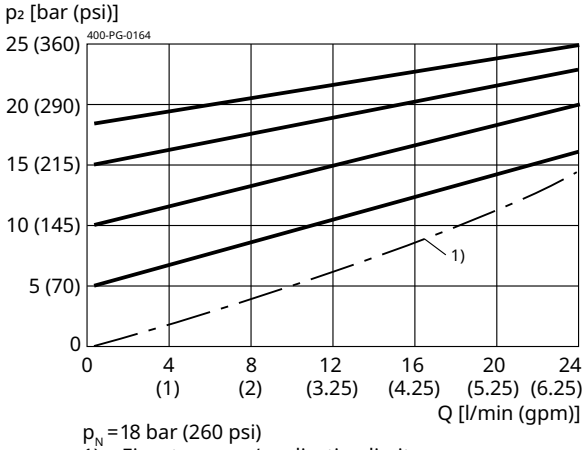

p_N = 18 bar (260 psi)
1) = Einsatzgrenze/application limit

p = f (Q) Pressure-flow rate

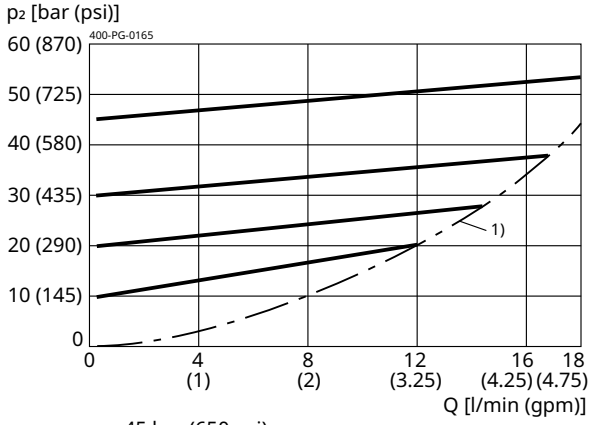

p_N = 45 bar (650 psi)
1) = application limit

p = f (Q) Pressure-flow rate

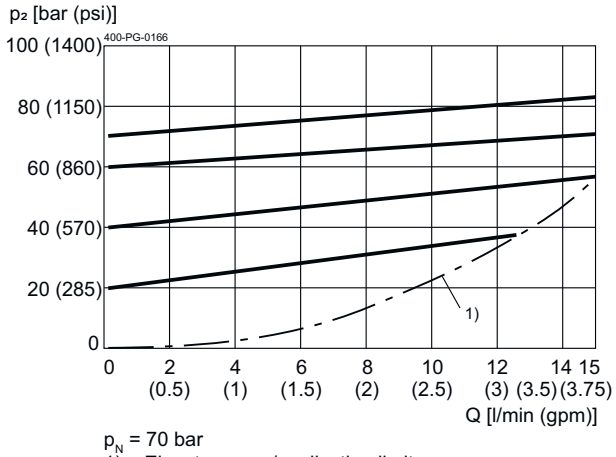

p_N = 70 bar
1) = Einsatzgrenze/application limit

p = f (Q) Pressure-flow rate

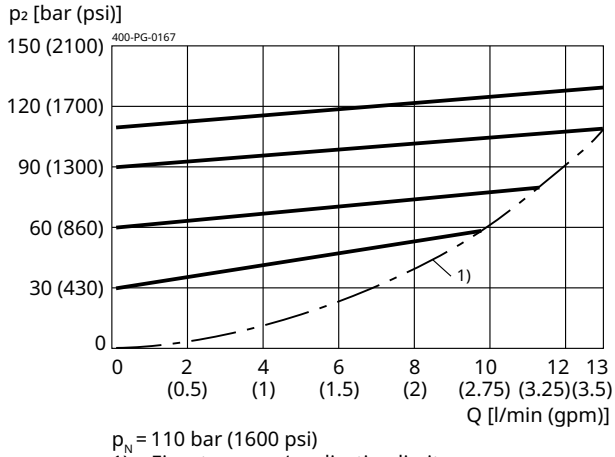

p_N = 110 bar (1600 psi)
1) = Einsatzgrenze/application limit

p = f (Q) Pressure-flow rate

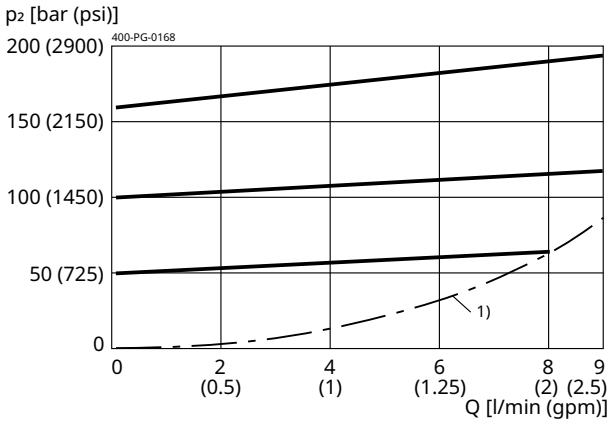

p_N = 160 bar (2300 psi)
1) = Einsatzgrenze/application limit

p = f (Q) Pressure-flow rate

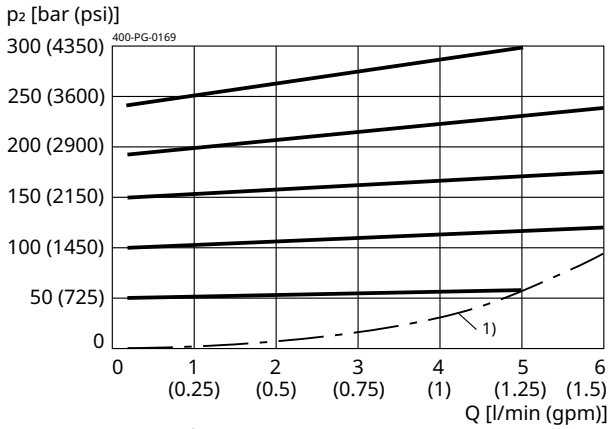

p_N = 250 bar (3600 psi)
1) = Einsatzgrenze/application limit

Installation

Beispiel für die Masseinheit:
Example for the dimensional units:

0.79 = 0.79 mm millimeter
(.031) = 0.031'' inch

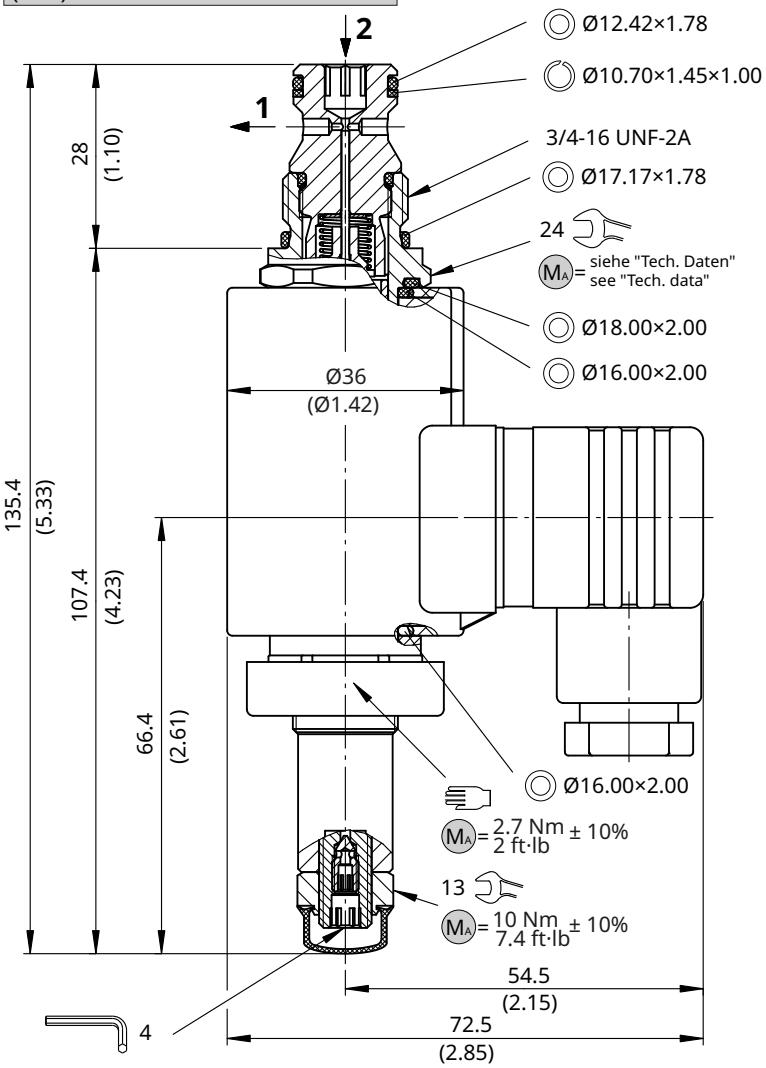

NOTE!

- Observe tightening torques M_A.
- Mount the valve preferably suspended (automatic air bleed).
- The valve is factory-set, no further adjustments are necessary.

IMPORTANT!

Prerequisite to achieve the valve's maximum performance rating:

- the solenoid is mounted aligned as depicted.
- mounted in a steel body.

ATTENTION!

Only qualified personnel with mechanical skills may carry out the following work:

- installation and, if necessary, adjustment.
- replacement of slip-on solenoid coil, if present (solenoid coil type; see "Technical Data").
- inspection and, if necessary, replacement of the seals shown in the illustration. New seals must only be installed after being oiled or greased (seal kit; see "Technical Data").

ATTENTION!

To prevent any pressure surges, port 1 must be routed to tank with the least possible backpressure. Any tank pressure acting at port 1 is additive to the pressure setting at the main port 2.

Emergency pressure setting

These proportional pressure screw-in cartridge valves are equipped as standard with an integral manual pressure setting. If a proportional solenoid is faulty, for example, this manual pressure setting enables the required pressure to be set mechanically. The manual pressure setting can also be used to make minor pressure adjustments directly at the system. The following steps must be observed.

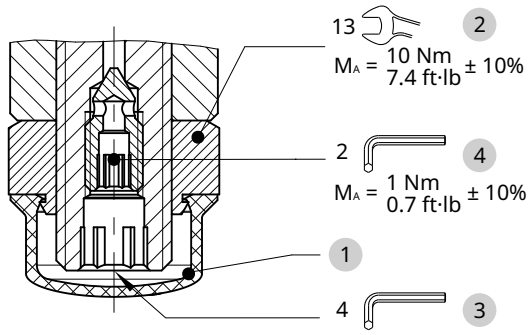

1. Remove the protective cap 1
2. Loosen the lock nut 2
3. Screw-in (turn to right) the adjusting spindle 3 until the required pressure is set.
4. Tighten the lock nut 2 to the specified torque.
5. Fit the protective cap 1

NOTE!
Any changes to the emergency pressure setting have a direct impact on the factory setting.

Reset to factory settings

To reset the proportional pressure-relief cartridges to their initial position (the factory setting), a constant flow rate and a pressure gauge that measures the pressure in the input port are needed. The pressure setting must not exceed the nominal pressure of the spring range in use. The following steps must be observed.

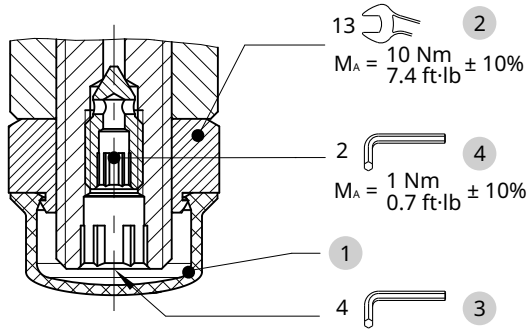

1. Ensure that the solenoid coil is de-energized
2. Remove the protective cap 1
3. Loosen the lock nut 2
4. Unscrew the adjusting spindle 3 to its end-stop
5. Screw-in the adjusting spindle 3 until the pressure on the gauge reaches the nominal pressure (pN) of the spring range in use
6. Tighten the lock nut 2 to the specified torque
7. Fit the protective cap 1

WWW.SUMY.IR

Air-bleeding

The integrated air-bleed screw allows the proportional pressure valves to be vented if necessary. If the screw-in valve is mounted as preferred (solenoid-coil hanging), it is self-venting. To vent the valve manually, follow the steps below.

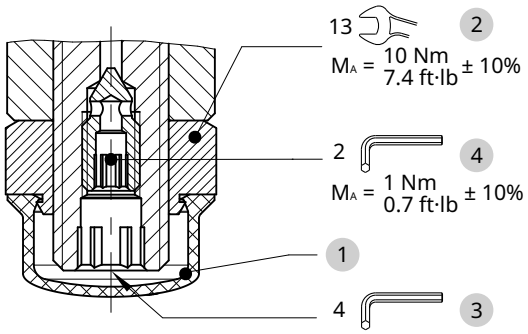

1. Remove the protective cap 1
2. Loosen the air-bleed screw 4 approx. 2 turns
3. Switch the valve ON/OFF several times until no more air bubbles escape
4. Tighten the air-bleed screw 4 to the specified torque
5. Fit the protective cap 1

WWW.SUMY.IR

Ordering code

Ex. D B D S B - 1 L - 018 - 2 _ - 3 24 D _

D	=	pressure-control valve
B	=	pressure relief valve
D	=	direct acting
S	=	electrically operated, D36
A ... Q	=	standard model according to valid data sheet
Z ... R	=	special model (on request)
1	=	pressure relief (with internal control oil outlet)
L	=	cavity type AL
018	=	pressure range ... 18 bar
045	=	pressure range ... 45 bar
070	=	pressure range ... 70 bar
110	=	pressure range ... 110 bar
160	=	pressure range ... 160 bar
250	=	pressure range ... 250 bar [1]
2	=	nominal size 2 for pressure ranges 250 and 160
3	=	nominal size 3 for pressure ranges 110 and 70
4	=	nominal size 4 for pressure ranges 45 and 18
N	=	NBR (nitril-butadien-rubber / BUNA) seals **(standard)**
V	=	FKM (fluorocarbon rubber / VITON) seals (special seals on request)
1...9	=	technical design no. (omit by ordering)
...	=	voltage e.g. 24 (24 V)
D	=	current DC

(blank)	=	DIN EN 175301-803 connection	3-pole 2 P+E **(standard)**	(IP 65)	with mating plug
T	=	DIN EN 175301-803 connection	3-pole 2 P+E, with protection diode	(IP 65)	with mating plug
M100	=	DIN EN 175301-803 connection	3-pole 2 P+E	(IP 65)	mating plug not supplied
J	=	Junior Timer plug connection	2-pole radial	(IP 65)	mating plug not supplied
JT	=	Junior Timer plug connection	2-pole radial, with protection diode	(IP 65)	mating plug not supplied
I	=	Junior Timer plug connection	2-pole axial	(IP 65)	mating plug not supplied
IT	=	Junior Timer plug connection	2-pole axial, with protection diode	(IP 65)	mating plug not supplied
D	=	Deutsch plug connection DT04-2P	2-pole 45°	(IP 67/69K)	mating plug not supplied
DT	=	Deutsch plug connection DT04-2P	2-pole 45°, with protection diode	(IP 67/69K)	mating plug not supplied
		other plug-variants, please consult BUCHER.			

[1] for higher pressure to 350 bar can be used the valve DBDTC.

IMPORTANT!
Not every combination of voltage values, current type and plug connections vailable.

Related data sheets

Reference	Description
400-P-040011	form tools
400-P-040171	cavity AL
400-P-120110	solenoid coil D36
400-P-720101	threaded port body GALA
400-P-010101	MTTFd Values for Hydraulic Valves

info.ch@bucherhydraulics.com **www.bucherhydraulics.com**

© 2026 by Bucher Hydraulics AG Frutigen, 3714 Frutigen, Switzerland

All rights reserved.
Data is provided for the purpose of product description only, and must not be construed as warranted characteristics in the legal sense. The information does not relieve users from the duty of conducting their own evaluations and tests. Because the products are subject to continual improvement, we reserve the right to amend the product specifications contained in this catalogue.

BUCHER hydraulics

WWW.SUMY.IR

Pressure valve
Relief function

Q_{max} = 24 l/min, p_{max} = 300 bar
Direct acting, spool type, proportional solenoid with emergency override
Type series: DBDSB-1LG-...

- Screw-in cartridge valve for cavity AL
- All external parts with zinc-nickel plating according to DIN EN ISO 19598
- Installation in threaded port body type GALA
- Inverse-proportional design
- Nominal pressure when solenoid de-energized (fail-safe function)
- With integral manual pressure setting
- High pressure wet-armature solenoids
- The slip-on coil can be rotated, and it can be replaced without opening the hydraulic envelope
- Various plug-connector systems and voltages are available

Symbol

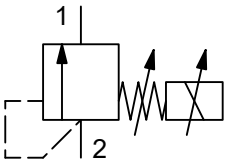

Description

Series DBDS_-1LG... inverse proportional pressure-relief valves are direct acting screw-in valves of sliding-spool design with a falling pressure/current characteristic and a 3/4-16-UNF mounting thread. With these pressure-relief valves, the relief pressure is dependent on the electrical control signal and can be continuously varied. When the solenoid is de-energized (initial position), the relief pressure is the nominal pressure of the applicable spring range (failsafe function). Any pressure at port 1 is additive to the valve setting at port 2, therefore port 1 should preferably be connected directly to tank. In control mode, the relief pressure is inversely proportional to the change in the required value (amplifier output current). In order to obtain precise pressure settings over the whole of the required pressure range (optimum resolution); the pressure relief valves are available in six spring ranges. If a proportional solenoid is faulty, for example, the integral manual pressure setting enables the required pressure to be set mechanically. All external parts of the screw-in valves are zinc-nickel plated and are thus suitable for use in the harshest operating environments. The slip-on coils can be replaced without opening the hydraulic envelope and can be positioned at any angle through 360°. These

WWW.SUMY.IR

valves are predominantly used in mobile and industrial applications to allow a pressure in hydraulic installations to be limited electro-proportionally. For self-assembly, please refer to the section related data sheets.

Technical data

General characteristics	Description, value, unit
Function group	pressure valve
Function	relief function
Design	screw-in cartridge valve
Controls	proportional solenoid with emergency override
Characteristic	direct acting, spool type
Construction size	NG 04
Thread size	3/4-16 UNF-2A
Mounting attitude	unrestricted (preferably vertical, coil down)
Weight	0.40 kg
Cavity acc. factory standard	AL
Tightening torque steel	40 Nm
Tightening torque aluminium	40 Nm
Tightening torque tolerance	± 10 %
Minimum ambient temperature	- 30 °C
Maximum ambient temperature	+ 50 °C
Surface protection	all external parts with zinc-nickel plating according to DIN EN ISO 19598
Sealing material	see ordering code
Seal kit order number	NBR: DS-284-N / FKM: DS-284-V

WWW.SUMY.IR

Hydraulic characteristics	Description, value, unit
Maximum operating pressure	300 bar
Restriction of the operating pressure	port 1 = max. 250 [1])
Maximum flow rate	24 l/min
Restriction of the flow rate	depending on the nominal pressure stage
Flow direction	see symbol
Hydraulic fluid	HL and HLP mineral oil according to DIN 51 524; other fluids on request!
Minimum fluid temperature	- 30 °C
Maximum fluid temperature	+ 70 °C
Viscosity range	15 ... 380 mm^2/s (cSt)
Recommended viscosity range	20 ... 130 mm^2/s (cSt)
Minimum fluid cleanliness (cleanliness class according to ISO 4406:1999)	class 18/16/13
Nominal pressure range	nominal pressure range 018: ...18 bar nominal pressure range 045: ...45 bar ominal pressure range 070: ...70 bar nominal pressure range 110: ...110 bar nominal pressure range 160: ...160 bar nominal pressure range 250: ...250 bar
Internal leakage flow rate	nominal pressure range 018: ...0.10 l/min nominal pressure range 045: ...0.10 l/min nominal pressure range 070: ...0.15 l/min nominal pressure range 110: ...0.20 l/min nominal pressure range 160: ...0.25 l/min nominal pressure range 250: ...0.25 l/min

NOTE!
[1]) Please note that any tank or return-line pressures acting at port 1 are additive to the pressure setting at port 2.

Electric characteristics	Description, value, unit
Actuator type	solenoid coil
Solenoid coils type	D36
Supply voltage DC	12 V DC 24 V DC
Control current	12 V = 0...1400 mA 24 V = 0...700 mA
Nominal power consumption	27 W
Switching time	6 ... 90 ms (Solenoid ON) 6 ... 20 ms (Solenoid OFF) These times are strongly influenced by fluid pressure, flow rate and viscosity, as well as by the dwell time under pressure
Relative duty cycle	100 %
Coil resistance R	Cold value at 20° - 12 V = 5.8 Ω / 24 V = 21 Ω max. warm value - 12 V = 8.6 Ω / 24 V = 32 Ω
Recommended PWM frequency	200 Hz
Response sensitivity with PWM	< 1 % I_{max}
Reproducibility with PWM	< 2 % Q_{nenn}
Hysteresis with PWM	2...4 % I_{max}
Reversal error with PWM	2...4 % I_{max}
Electrical connection coil	DIN EN 175301-803, 3-pole 2 P+E (IP 65)
Protection class solenoid coil to ISO 20 653 / EN 60 529	IP 65 / IP 67 / IP 69K, see Ordering code (with appropriate mating connector and proper fitting and sealing)

Performance graphs

measured with oil viscosity 33.0 mm²/s (cSt)

p = f (I) Pressure adjustment

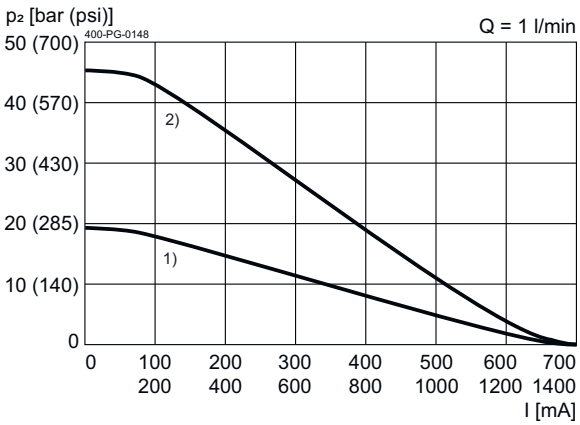

1) = p_N 18 bar
2) = p_N 45 bar

p = f (I) Pressure adjustment

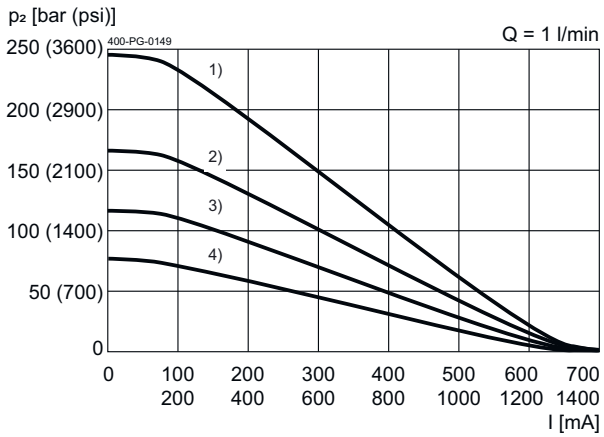

1) = pN 250 bar
2) = pN 160 bar
3) = p_N 110 bar
4) = p_N 70 bar

p = f (Q) Pressure-flow rate

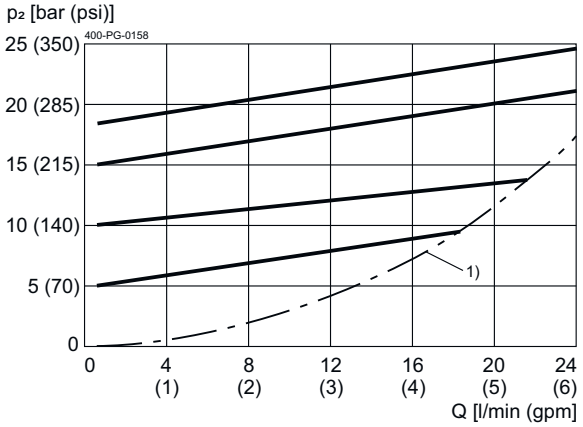

p_N = 18 bar
1) = Application limit

p = f (Q) Pressure-flow rate

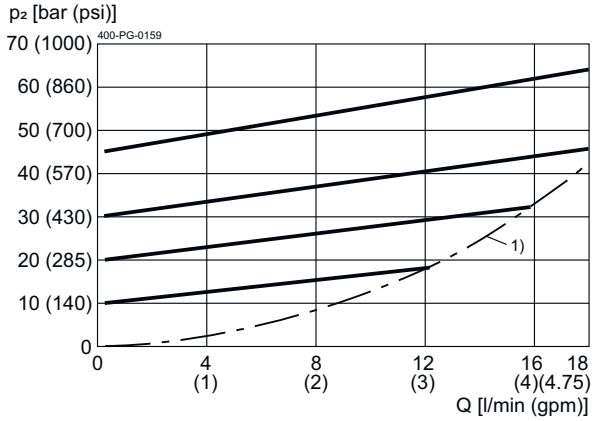

p_N = 45 bar
1) = Application limit

p = f (Q) Pressure-flow rate

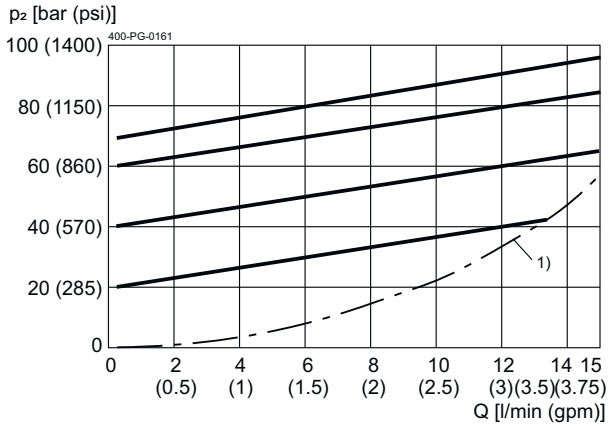

p_N = 70 bar
1) = Application limit

p = f (Q) Pressure-flow rate

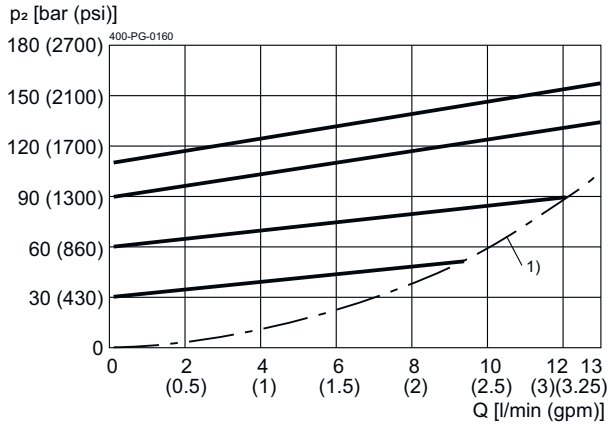

p_N = 110 bar
1) = Application limit

p = f (Q) Pressure-flow rate

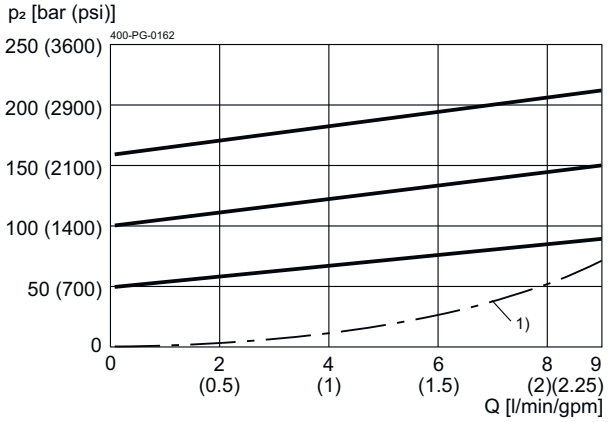

p_N = 160 bar
1) = Application limit

p = f (Q) Pressure-flow rate

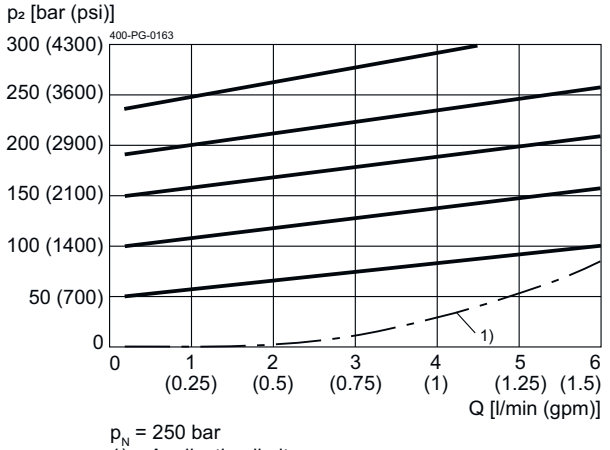

p_N = 250 bar
1) = Application limit

Installation

Beispiel für die Masseinheit:
Example for the dimensional units:

0.79 = 0.79 mm millimeter
(.031) = 0.031'' inch

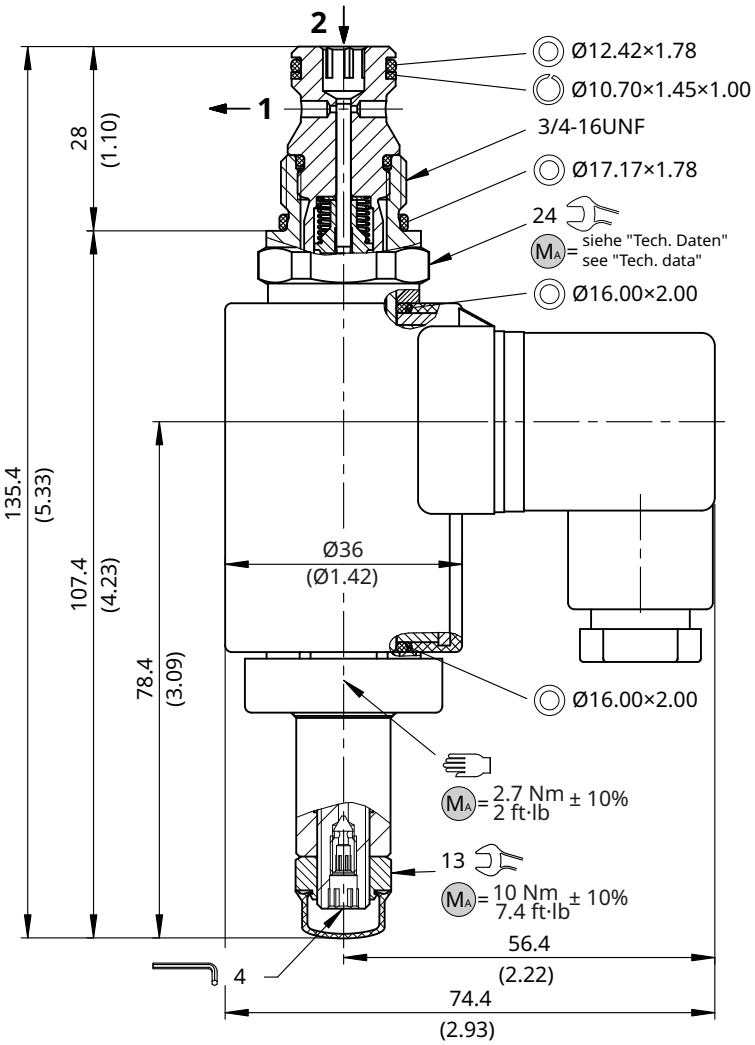

NOTE!

- Observe tightening torques M_A.
- Mount the valve preferably suspended (automatic air bleed).
- The valve is factory-set, no further adjustments are necessary.

IMPORTANT!

Prerequisite to achieve the valve's maximum performance rating:

- the solenoid is mounted aligned as depicted.
- mounted in a steel body.

ATTENTION!

Only qualified personnel with mechanical skills may carry out the following work:

- installation and, if necessary, adjustment.
- replacement of slip-on solenoid coil, if present (solenoid coil type; see "Technical Data").
- inspection and, if necessary, replacement of the seals shown in the illustration. New seals must only be installed after being oiled or greased (seal kit; see "Technical Data").

ATTENTION!

To prevent any pressure surges, port 1 must be routed to tank with the least possible backpressure. Any tank pressure acting at port 1 is additive to the pressure setting at the main port 2.

Emergency pressure setting

These inverse proportional pressure screw-in cartridge valves are equipped as standard with an integral manual pressure setting. If a proportional solenoid is faulty, for example, this manual pressure setting enables the required pressure to be set mechanically. The manual pressure setting can also be used to make minor pressure adjustments directly at the system. The following steps must be observed.

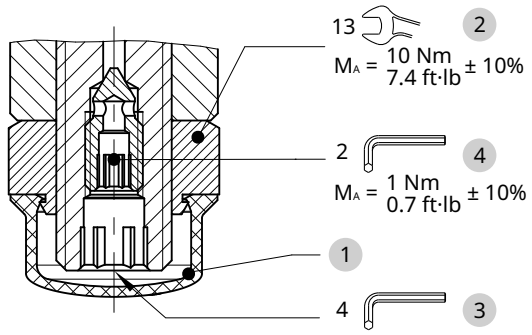

1. Remove the protective cap 1
2. Loosen the lock nut 2
3. Screw-in (turn to right) the adjusting spindle 3 until the required pressure is set.
4. Tighten the lock nut 2 to the specified torque.
5. Fit the protective cap 1

NOTE!
Any changes to the emergency pressure setting have a direct impact on the factory setting.

Reset to factory settings

To reset the proportional pressure-relief cartridges to their initial position (the factory setting), a constant flow rate and a pressure gauge that measures the pressure in the input port are needed. The pressure setting must not exceed the nominal pressure of the spring range in use. The following steps must be observed.

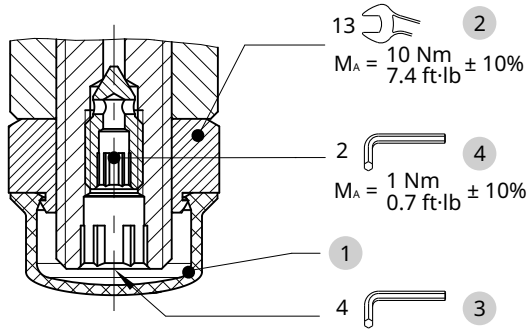

1. Ensure that the solenoid coil is de-energized
2. Remove the protective cap 1
3. Loosen the lock nut 2
4. Unscrew the adjusting spindle 3 to its end-stop
5. Screw-in the adjusting spindle 3 until the pressure on the gauge reaches the nominal pressure (pN) of the spring range in use
6. Tighten the lock nut 2 to the specified torque
7. Fit the protective cap 1

WWW.SUMY.IR

Air-bleeding

The integrated air-bleed screw allows the proportional pressure valves to be vented if necessary. If the screw-in valve is mounted as preferred (solenoid-coil hanging), it is self-venting. To vent the valve manually, follow the steps below.

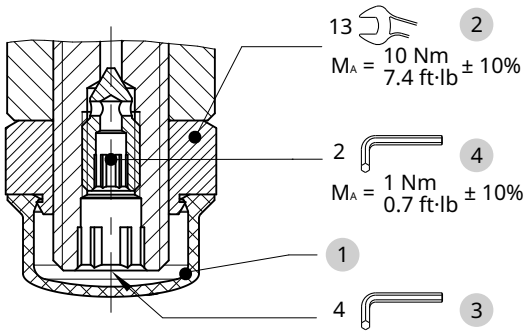

1. Remove the protective cap 1
2. Loosen the air-bleed screw 4 approx. 2 turns
3. Switch the valve ON/OFF several times until no more air bubbles escape
4. Tighten the air-bleed screw 4 to the specified torque
5. Fit the protective cap 1

Ordering code

Ex. D B D S B - 1 L G - 018 - 2 _ - 3 24 D _

D	=	pressure-control valve
B	=	pressure relief valve
D	=	direct acting
S	=	electrically operated, D36
A ... Q	=	standard model according to valid data sheet
Z ... R	=	special model (on request)
1	=	pressure relief (with internal control oil outlet)
L	=	cavity type AL
G	=	proportional solenoid, inverse type (pulling)
018	=	pressure range ... 18 bar
045	=	pressure range ... 45 bar
070	=	pressure range ... 70 bar
110	=	pressure range ... 110 bar
160	=	pressure range ... 160 bar
250	=	pressure range ... 250 bar [1]
2	=	nominal size 2 for pressure ranges 250 und 160
3	=	nominal size 3 for pressure ranges 110 und 70
4	=	nominal size 4 for pressure ranges 45 und 18
N	=	NBR (nitril-butadien-rubber / BUNA) seals **(standard)**
V	=	FKM (fluorocarbon rubber / VITON) seals (special seals on request)
1...9	=	technical design no. (omit by ordering)
...	=	voltage e.g. 24 (24 V)
D	=	current DC

(blank)	=	DIN EN 175301-803 connection	3-pole 2 P+E **(standard)**	(IP 65)	with mating plug
T	=	DIN EN 175301-803 connection	3-pole 2 P+E, with protection diode	(IP 65)	with mating plug
M100	=	DIN EN 175301-803 connection	3-pole 2 P+E	(IP 65)	mating plug not supplied
J	=	Junior Timer plug connection	2-pole radial	(IP 65)	mating plug not supplied
JT	=	Junior Timer plug connection	2-pole radial, with protection diode	(IP 65)	mating plug not supplied
I	=	Junior Timer plug connection	2-pole axial	(IP 65)	mating plug not supplied
IT	=	Junior Timer plug connection	2-pole axial, with protection diode	(IP 65)	mating plug not supplied
D	=	Deutsch plug connection DT04-2P	2-pole 45°	(IP 67/69K)	mating plug not supplied
DT	=	Deutsch plug connection DT04-2P	2-pole 45°, with protection diode	(IP 67/69K)	mating plug not supplied
		other plug-variants, please consult BUCHER.			

[1] for higher pressure to 350 bar can be used the valve DBDTC.

IMPORTANT!
Not every combination of voltage values, current type and plug connections vailable.

Related data sheets

Reference	Description
400-P-040011	form tools
400-P-040171	cavity AL
400-P-120110	solenoid coil D36
400-P-720101	threaded port body GALA

info.ch@bucherhydraulics.com **www.bucherhydraulics.com**

© 2026 by Bucher Hydraulics AG Frutigen, 3714 Frutigen, Switzerland

All rights reserved.
Data is provided for the purpose of product description only, and must not be construed as warranted characteristics in the legal sense. The information does not relieve users from the duty of conducting their own evaluations and tests. Because the products are subject to continual improvement, we reserve the right to amend the product specifications contained in this catalogue.

BUCHER hydraulics

WWW.SUMY.IR

Pressure valve
Relief function

Q_{max} = 24 l/min, p_{max} = 400 bar
Direct acting, spool type, proportional solenoid with emergency override
Type series: DBDTC-1L-...

- Screw-in cartridge valve for cavity AL
- All external parts with zinc-nickel plating according to DIN EN ISO 19598
- Installation in threaded port body type GALA
- In a power failure, the pressure setting drops to the minimum value
- With integral manual pressure setting
- All common voltage types available
- High pressure wet-armature solenoids
- The slip-on coil can be rotated, and it can be replaced without opening the hydraulic envelope

Symbol

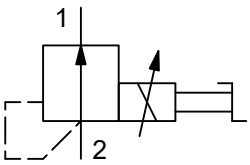

Description

The proportional pressure-relief valves, series DBDT_-1L..., are size 2, direct acting screw-in valves of sliding-spool design with a 3/4-16 UNF mounting thread. The relief pressure is dependent on the electrical control current and can be continuously varied. When the solenoid is de-energized (initial position), connection 2 to 1 is open and the minimum pressure (free flow) depends on the flow rate. Any pressure at port 1 is additive to the valve setting at port 2, therefore port 1 should preferably be connected directly to tank. In control mode, the relief pressure is proportional to the change in the required value (amplifier output current). If a proportional solenoid is faulty, for example, the integral manual pressure setting enables the required pressure to be set mechanically. All external parts of the screw-in valves are zinc-nickel plated and are thus suitable for use in the harshest operating environments. The slip-on coils can be replaced without opening the hydraulic envelope and can be positioned at any angle through 360°. Proportional pressure-relief valves are predominantly used in mobile and industrial applications to allow a pressure in hydraulic installations to be limited electro-proportionally. For self-assembly, please refer to the section related data sheets.

Technical data

General characteristics	Description, value, unit
Function group	pressure valve
Function	relief function
Design	screw-in cartridge valve
Controls	proportional solenoid with emergency override
Characteristic	direct acting, spool type
Construction size	NG 04
Thread size	3/4-16 UNF-2A
Mounting attitude	unrestricted (preferably vertical, coil down)
Weight	0.54 kg
Cavity acc. factory standard	AL
Tightening torque steel	40 Nm
Tightening torque aluminium	40 Nm
Tightening torque tolerance	± 10 %
Minimum ambient temperature	- 30 °C
Maximum ambient temperature	+ 60 °C
Surface protection	all external parts with zinc-nickel plating according to DIN EN ISO 19598
Sealing material	see ordering code
Seal kit order number	NBR: DS-284-N / FKM: DS-284-V

WWW.SUMY.IR

Hydraulic characteristics	Description, value, unit
Maximum operating pressure	400 bar
Restriction of the operating pressure	port 1 = 250 [1])
Maximum flow rate	24 l/min
Restriction of the flow rate	depending on the nominal pressure stage
Flow direction	see symbol
Hydraulic fluid	HL and HLP mineral oil according to DIN 51 524; other fluids on request!
Minimum fluid temperature	- 30 °C
Maximum fluid temperature	+ 70 °C
Viscosity range	15 ... 380 mm^2/s (cSt)
Recommended viscosity range	20 ... 130 mm^2/s (cSt)
Minimum fluid cleanliness (cleanliness class according to ISO 4406:1999)	class 18/16/13
Nominal pressure range	nominal pressure range 025: ...25 bar nominal pressure range 063: ...63 bar nominal pressure range 100: ...100 bar nominal pressure range 160: ...160 bar nominal pressure range 230: ...230 bar nominal pressure range 350: ...350 bar
Internal leakage flow rate	nominal pressure range 025: ...0.10 l/min nominal pressure range 063: ...0.10 l/min nominal pressure range 100: ...0.20 l/min nominal pressure range 160: ...0.25 l/min nominal pressure range 230: ...0.30 l/min nominal pressure range 350: ...0.40 l/min

NOTE!
[1]) Please note that any tank or return-line pressures acting at port 1 are additive to the pressure setting at port 2.

WWW.SUMY.IR

Electric characteristics	Description, value, unit
Actuator type	solenoid coil
Solenoid coils type	36X48/16.1
Supply voltage DC	12 V DC 24 V DC
Control current	12 V = 0...1600 mA 24 V = 0...800 mA
Nominal power consumption	30 W
Switching time	20 ... 60 ms (Solenoid ON) 6 ... 20 ms (Solenoid OFF) These times are strongly influenced by fluid pressure, flow rate and viscosity, as well as by the dwell time under pressure
Relative duty cycle	100 %
Coil resistance R	cold value at 20° = 12 V = 4.35 Ω / 24 V = 17.2 Ω max. warm value = 12 V = 6.8 Ω / 24 V = 26.9 Ω
Recommended PWM frequency	200 Hz
Response sensitivity with PWM	< 1 % I_{max}
Reproducibility with PWM	< 2 % Q_{nenn}
Hysteresis with PWM	2...4 % I_{max}
Reversal error with PWM	2...4 % I_{max}
Electrical connection coil	DIN EN 175301-803, 3-pole 2 P+E (IP 65)
Protection class solenoid coil to ISO 20 653 / EN 60 529	IP 65 / IP 67 / IP 69K, see Ordering code (with appropriate mating connector and proper fitting and sealing)

Performance graphs

measured with oil viscosity 33.0 mm²/s (cSt)

p = f (I) Pressure adjustment

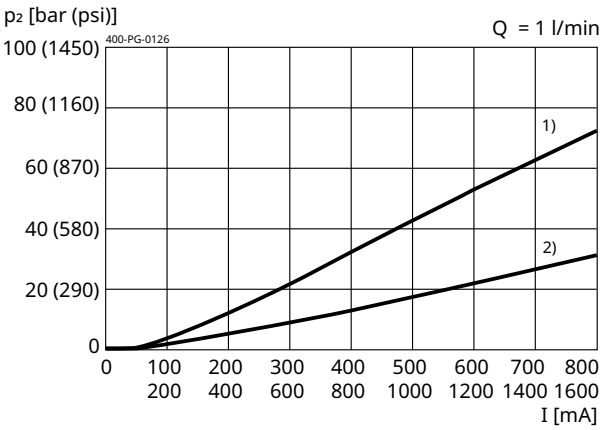

1) = p_N 63 bar (915 psi)
2) = p_N 25 bar (360 psi)

p = f (I) Pressure adjustment

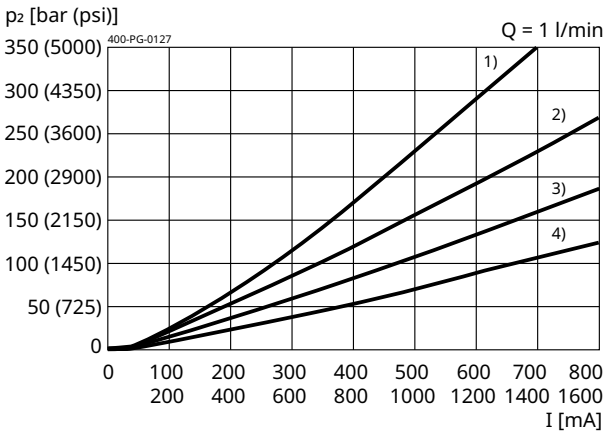

1) = p_N 350 bar (5000 psi)
2) = p_N 230 bar (3350 psi)
3) = p_N 160 bar (2300 psi)
4) = p_N 100 bar (1450 psi)

p = f (Q) Pressure-flow rate

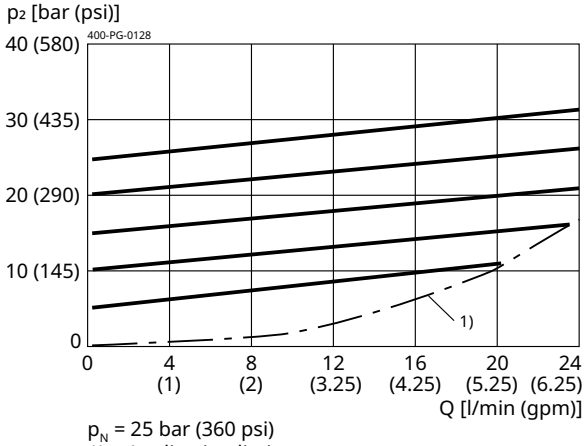

p_N = 25 bar (360 psi)
1) = Application limit

p = f (Q) Pressure-flow rate

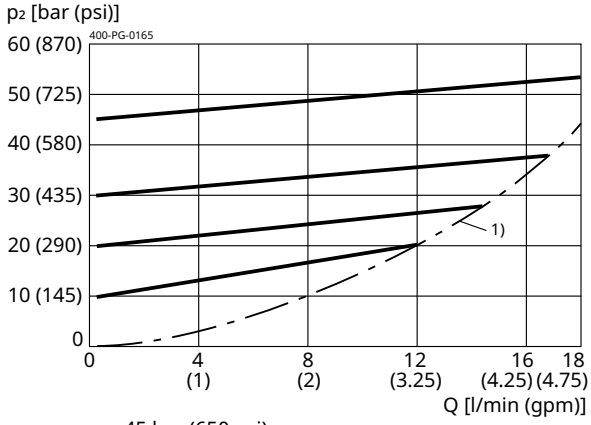

p_N = 45 bar (650 psi)
1) = application limit

p = f (Q) Pressure-flow rate

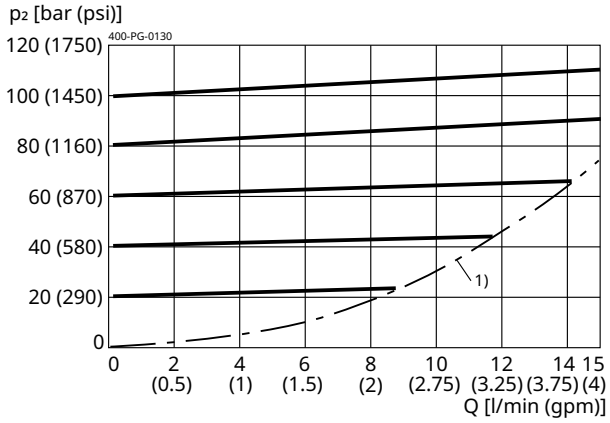

p_N = 100 bar (1450 psi)
1) = Application limit

p = f (Q) Pressure-flow rate

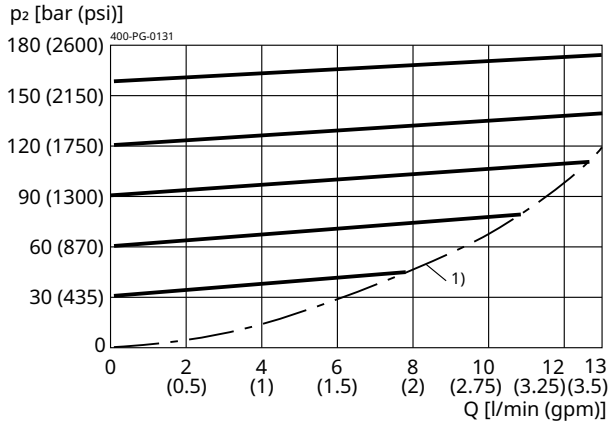

p_N = 160 bar (2300 psi)
1) = Application limit

p = f (Q) Pressure-flow rate

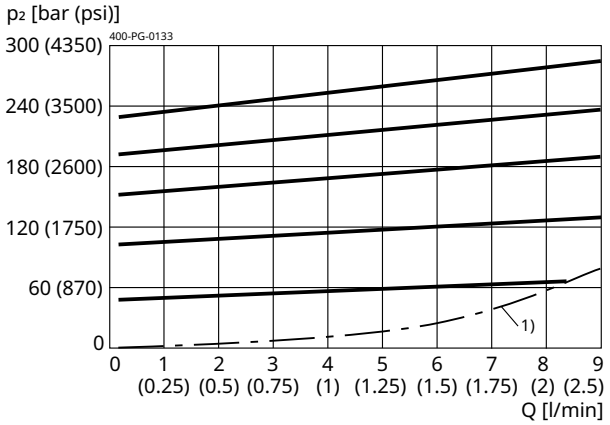

p_N = 230 bar (3350 psi)
1) = Application limit

p = f (Q) Pressure-flow rate

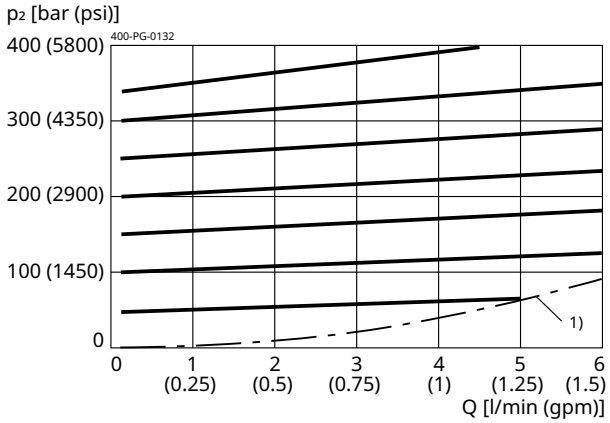

p_N = 350 bar (5000 psi)
1) = Application limit

Installation

Beispiel für die Masseinheit:
Example for the dimensional units:

0.79 = 0.79 mm millimeter
(.031) = 0.031'' inch

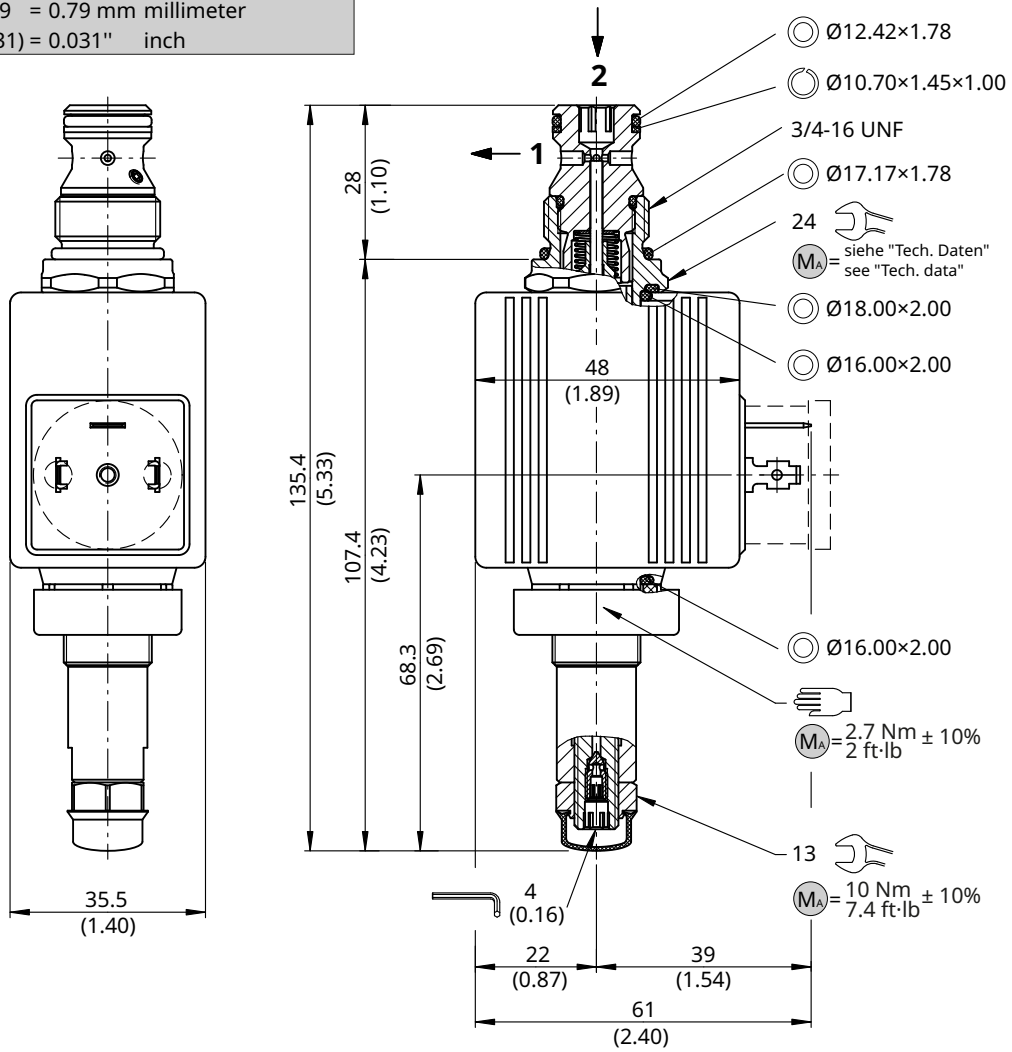

NOTE!
- Observe tightening torques M_A.
- Mount the valve preferably suspended (automatic air bleed).
- The valve is factory-set, no further adjustments are necessary.

IMPORTANT!
Prerequisite to achieve the valve's maximum performance rating:
- the solenoid is mounted aligned as depicted.
- mounted in a steel body.

ATTENTION!
Only qualified personnel with mechanical skills may carry out the following work:
- installation and, if necessary, adjustment.
- replacement of slip-on solenoid coil, if present (solenoid coil type; see "Technical Data").
- inspection and, if necessary, replacement of the seals shown in the illustration. New seals must only be installed after being oiled or greased (seal kit; see "Technical Data").

ATTENTION!
To prevent any pressure surges, port 1 must be routed to tank with the least possible backpressure. Any tank pressure acting at port 1 is additive to the pressure setting at the main port 2.

Emergency pressure setting

Optionally, the proportional pressure screw-in cartridge valves can be supplied with an integral manual emergency pressure setting. If a proportional solenoid is faulty, for example, this manual pressure setting enables the required pressure to be set mechanically up to max. 60% of the nominal pressure. The manual pressure setting is not designed for adjusting the pressure in a dynamic control mode. The following steps must be observed.

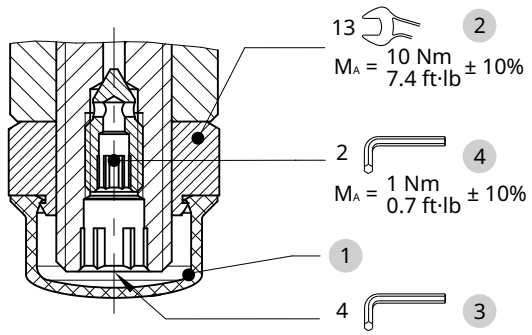

1. Remove the protective cap 1
2. Loosen the lock nut 2
3. Screw-in (turn to right) the adjusting spindle 3 until the required pressure is set.
4. Tighten the lock nut 2 to the specified torque.
5. Fit the protective cap 1

NOTE!
Any changes to the emergency pressure setting have a direct impact on the factory setting.

Reset to factory settings

To reset the proportional pressure-relief cartridges to their initial position (the factory setting), a constant flow rate and a pressure gauge that measures the pressure in the input port are needed. The pressure setting must not exceed the nominal pressure of the spring range in use. The following steps must be observed.

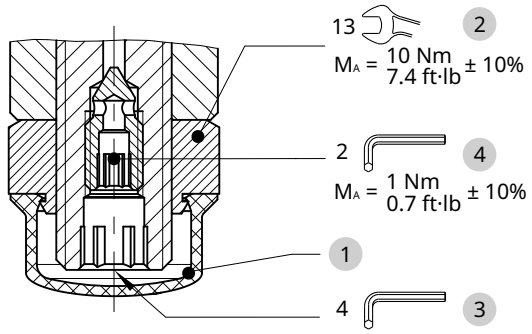

1. Ensure that the solenoid coil is de-energized
2. Remove the protective cap 1
3. Loosen the lock nut 2
4. Unscrew the adjusting spindle 3 to its end-stop
5. Screw-in the adjusting spindle 3 until the pressure on the gauge reaches the nominal pressure (pN) of the spring range in use
6. Tighten the lock nut 2 to the specified torque
7. Fit the protective cap 1

Air-bleeding

The integrated air-bleed screw allows the proportional pressure valves to be vented if necessary. If the screw-in valve is mounted as preferred (solenoid-coil hanging), it is self-venting. To vent the valve manually, follow the steps below.

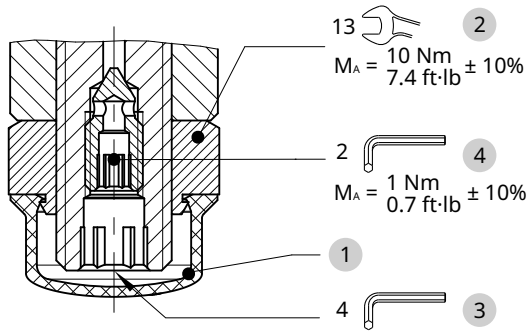

1. Remove the protective cap 1
2. Loosen the air-bleed screw 4 approx. 2 turns
3. Switch the valve ON/OFF several times until no more air bubbles escape
4. Tighten the air-bleed screw 4 to the specified torque
5. Fit the protective cap 1

Ordering code

z.B. D B D T C - 1 L - 025 - 4 _ - 1 24 D _ _

D = pressure-control valve
B = pressure-control valve
D = direct acting
T = electrically operated, COIL 36X48, proportional
C ... Q = standard model according to valid data sheet
Z ... R = special model (on request)
1 = pressure relief (with internal control oil outlet)
L = cavity type AL
025 = pressure range ... 25 bar
063 = pressure range ... 63 bar
100 = pressure range ... 100 bar
160 = pressure range ... 160 bar
230 = pressure range ... 230 bar
350 = pressure range ... 350 bar
2 = nominal size 2 for pressure ranges 350 and 230
3 = nominal size 3 for pressure ranges 160 and 100
4 = nominal size 4 for pressure ranges 063 and 025
N = NBR (nitril-butadien-rubber / BUNA) seals **(standard)**
V = FKM (fluorocarbon rubber / VITON) seals (special seals on request)
1...9 = technical design no. (omit by ordering)
... = voltage e.g. 24 (24 V)
D = current DC

G	= DIN EN 175301-803 connection	3-pole 2 P+E **(standard)**	(IP 65)	mating plug not supplied
GR	= DIN EN 175301-803 connection	3-pole 2 P+E, with protection diode	(IP 65)	
J	= Junior Timer plug connection	2-pole radial	(IP 65)	
JR	= Junior Timer plug connection	2-pole radial, with protection diode	(IP 65)	
U	= Deutsch plug connection DT04-2P	2-pole radial	(IP 67/69K)	
UR	= Deutsch plug connection DT04-2P	2-pole radial, with protection diode	(IP 67/69K)	

other plug-variants, please consult BUCHER.
(blank) = connection without mating plug **(standard)**
Q = only connection “G“ and “GR“ with mating plug

IMPORTANT!
Not every combination of voltage values and plug connections available.

Related data sheets

Reference	Description
400-P-040011	form tools
400-P-040171	cavity AL
400-P-720101	threaded port body GALA
400-P-120112	solenoid coil Coil 36X48-161

info.ch@bucherhydraulics.com **www.bucherhydraulics.com**

© 2026 by Bucher Hydraulics AG Frutigen, 3714 Frutigen, Switzerland

All rights reserved.
Data is provided for the purpose of product description only, and must not be construed as warranted characteristics in the legal sense. The information does not relieve users from the duty of conducting their own evaluations and tests. Because the products are subject to continual improvement, we reserve the right to amend the product specifications contained in this catalogue.

BUCHER hydraulics

WWW.SUMY.IR

Pressure valve
Relief function

Q_{max} = 24 l/min, p_{max} = 400 bar
Direct acting, spool type, proportional solenoid with emergency override
Type series: DBDTC-1LG-...

- Screw-in cartridge valve for cavity AL
- All external parts with zinc-nickel plating according to DIN EN ISO 19598
- Installation in threaded port body type GALA
- Nominal pressure when solenoid de-energized (fail-safe function)
- With integral manual pressure setting
- Inverse-proportional design
- Large variety of plug connections
- High pressure wet-armature solenoids
- The slip-on coil can be rotated, and it can be replaced without opening the hydraulic envelope

Symbol

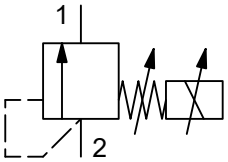

Description

The inverse proportional pressure-relief valves, series DBDT_-1LG..., are size 2, direct acting screw-in valves of sliding-spool design with a falling pressure/current characteristic and a 3/4-16 UNF mounting thread. With these pressure-relief cartridges, the relief pressure is dependent on the electrical control signal and can be continuously varied. When the solenoid is de-energized (initial position), the relief pressure is the nominal pressure of the applicable spring range (failsafe function). Any pressure at port 1 is additive to the valve setting at port 2, therefore port 1 should preferably be connected directly to tank. In control mode, the relief pressure is inversely proportional to the change in the required value (amplifier output current). In order to obtain precise pressure settings over the whole of the required pressure range (optimum resolution), these valves are available in six spring ranges. If a proportional solenoid is faulty, for example, the integral manual pressure setting enables the required pressure to be set mechanically. All external parts of the screw-in valves are zinc-nickel plated and are thus suitable for use in the harshest operating environments. The slip-on coils can be replaced without opening the hydraulic envelope and can be positioned at any angle through 360°. These valves are predominantly used in mobile and industrial applications to allow a pressure in hydraulic installations

to be limited electro-proportionally. For self-assembly, please refer to the section related data sheets.

Technical data

General characteristics	Description, value, unit
Function group	pressure valve
Function	relief function
Design	screw-in cartridge valve
Controls	proportional solenoid with emergency override
Characteristic	direct acting, spool type
Construction size	NG 04
Thread size	3/4-16 UNF-2A
Mounting attitude	unrestricted (preferably vertical, coil down)
Weight	0.58 kg
Cavity acc. factory standard	AL
Tightening torque steel	40 Nm
Tightening torque aluminium	40 Nm
Tightening torque tolerance	± 10 %
Minimum ambient temperature	- 30 °C
Maximum ambient temperature	+ 60 °C
Surface protection	all external parts with zinc-nickel plating according to DIN EN ISO 19598
Sealing material	see ordering code
Seal kit order number	NBR: DS-284-N / FKM: DS-284-V

WWW.SUMY.IR

Hydraulic characteristics	Description, value, unit
Maximum operating pressure	400 bar
Restriction of the operating pressure	port 1 = 250 [1])
Maximum flow rate	24 l/min
Restriction of the flow rate	depending on the nominal pressure stage
Flow direction	see symbol
Hydraulic fluid	HL and HLP mineral oil according to DIN 51 524; other fluids on request!
Minimum fluid temperature	- 30 °C
Maximum fluid temperature	+ 70 °C
Viscosity range	15 ... 380 mm^2/s (cSt)
Recommended viscosity range	20 ... 130 mm^2/s (cSt)
Minimum fluid cleanliness (cleanliness class according to ISO 4406:1999)	class 18/16/13
Nominal pressure range	nominal pressure range 025: ...25 bar nominal pressure range 063: ...63 bar nominal pressure range 100: ...100 bar nominal pressure range 160: ...160 bar nominal pressure range 230: ...230 bar nominal pressure range 350: ...350 bar
Internal leakage flow rate	nominal pressure range 025: ...0.10 l/min nominal pressure range 063: ...0.10 l/min nominal pressure range 100: ...0.20 l/min nominal pressure range 160: ...0.25 l/min nominal pressure range 230: ...0.30 l/min nominal pressure range 350: ...0.40 l/min

NOTE!
[1]) Please note that any tank or return-line pressures acting at port 1 are additive to the pressure setting at port 2.

WWW.SUMY.IR

Electric characteristics	Description, value, unit
Actuator type	solenoid coil
Solenoid coils type	36X48/16.1
Supply voltage DC	12 V DC 24 V DC
Control current	12 V = 0...1600 mA 24 V = 0...800 mA
Nominal power consumption	30 W
Switching time	6 ... 90 ms (Solenoid ON) 6 ... 20 ms (Solenoid OFF) These times are strongly influenced by fluid pressure, flow rate and viscosity, as well as by the dwell time under pressure
Relative duty cycle	100 %
Coil resistance R	cold value at 20° = 12 V = 4.35 Ω / 24 V = 17.2 Ω max. warm value = 12 V = 6.8 Ω / 24 V = 26.9 Ω
Recommended PWM frequency	200 Hz
Response sensitivity with PWM	< 1 % I_{max}
Reproducibility with PWM	< 2 % Q_{nenn}
Hysteresis with PWM	2...4 % I_{max}
Reversal error with PWM	2...4 % I_{max}
Electrical connection coil	DIN EN 175301-803, 3-pole 2 P+E (IP 65)
Protection class solenoid coil to ISO 20 653 / EN 60 529	IP 65 / IP 67 / IP 69K, see Ordering code (with appropriate mating connector and proper fitting and sealing)

Performance graphs

measured with oil viscosity 33.0 mm²/s (cSt)

p = f (I) Pressure adjustment

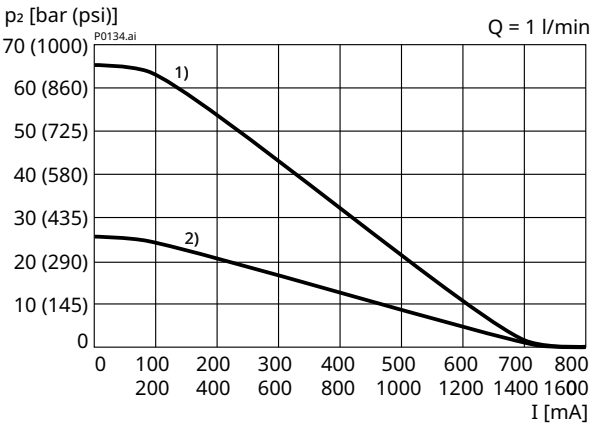

1) = p_N 63 bar (915 psi)
2) = p_N 25 bar (360 psi)

p = f (I) Pressure adjustment

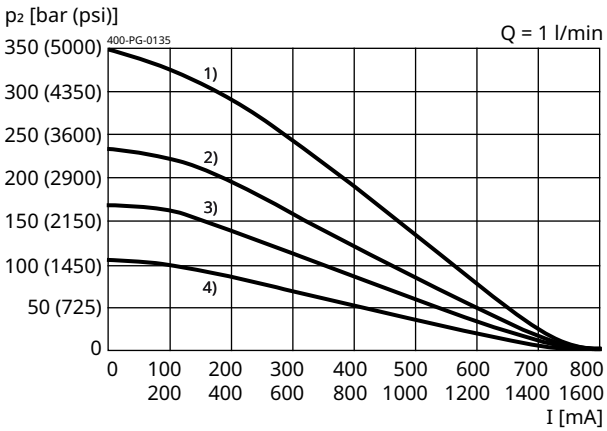

1) = p_N 350 bar (5000 psi)
2) = p_N 230 bar (3350 psi)
3) = p_N 160 bar (2300 psi)
4) = p_N 100 bar (1450 psi)

p = f (Q) Pressure-flow rate

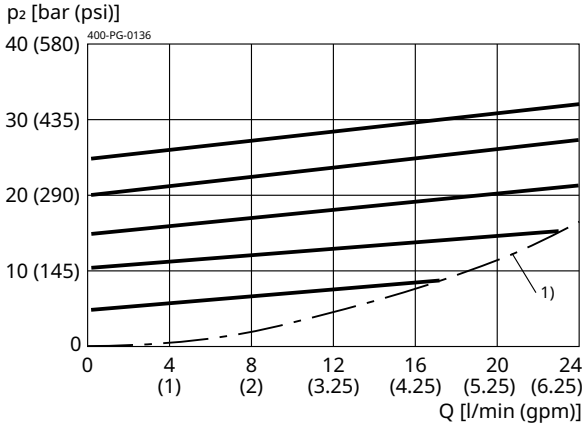

p_N = 25 bar (360 psi)
1) = Application limit

p = f (Q) Pressure-flow rate

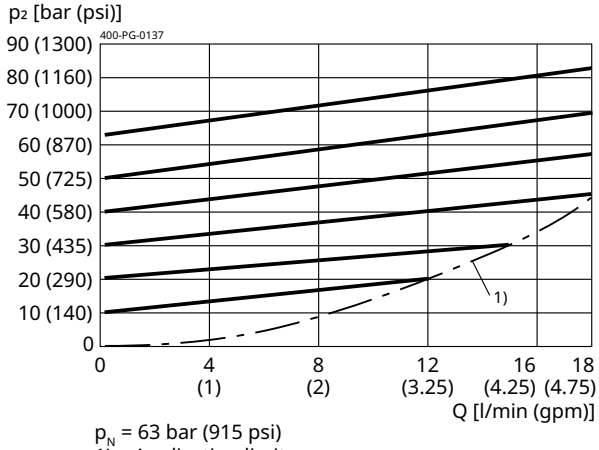

p_N = 63 bar (915 psi)
1) = Application limit

p = f (Q) Pressure-flow rate

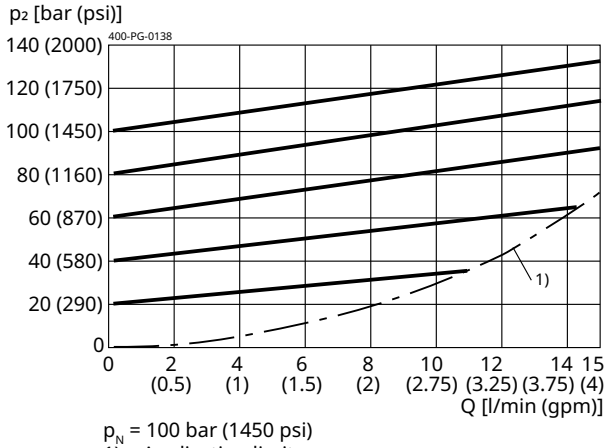

p_N = 100 bar (1450 psi)
1) = Application limit

p = f (Q) Pressure-flow rate

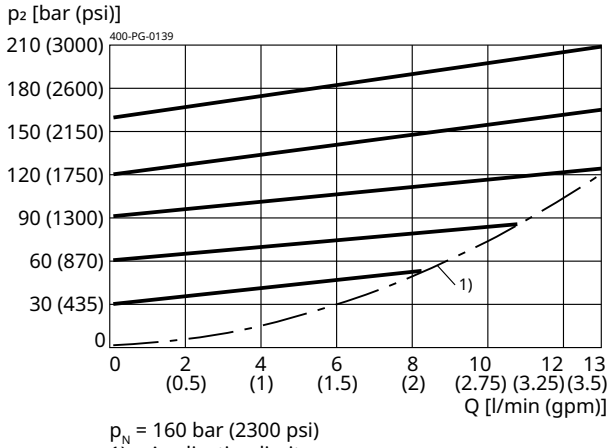

p_N = 160 bar (2300 psi)
1) = Application limit

p = f (Q) Pressure-flow rate

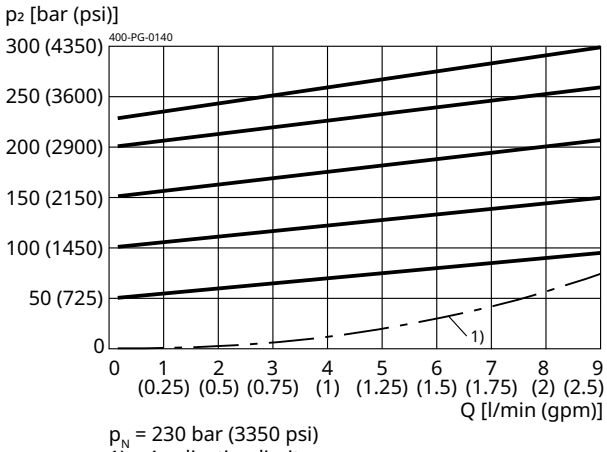

p_N = 230 bar (3350 psi)
1) = Application limit

p = f (Q) Pressure-flow rate

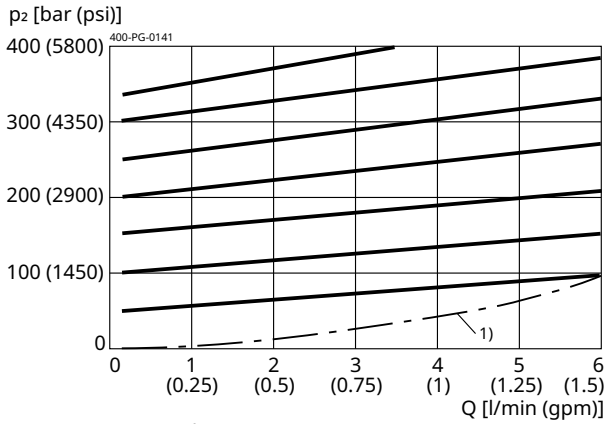

p_N = 350 bar (5000 psi)
1) = Application limit

Installation

Beispiel für die Masseinheit:
Example for the dimensional units:

0.79 = 0.79 mm millimeter
(.031) = 0.031'' inch

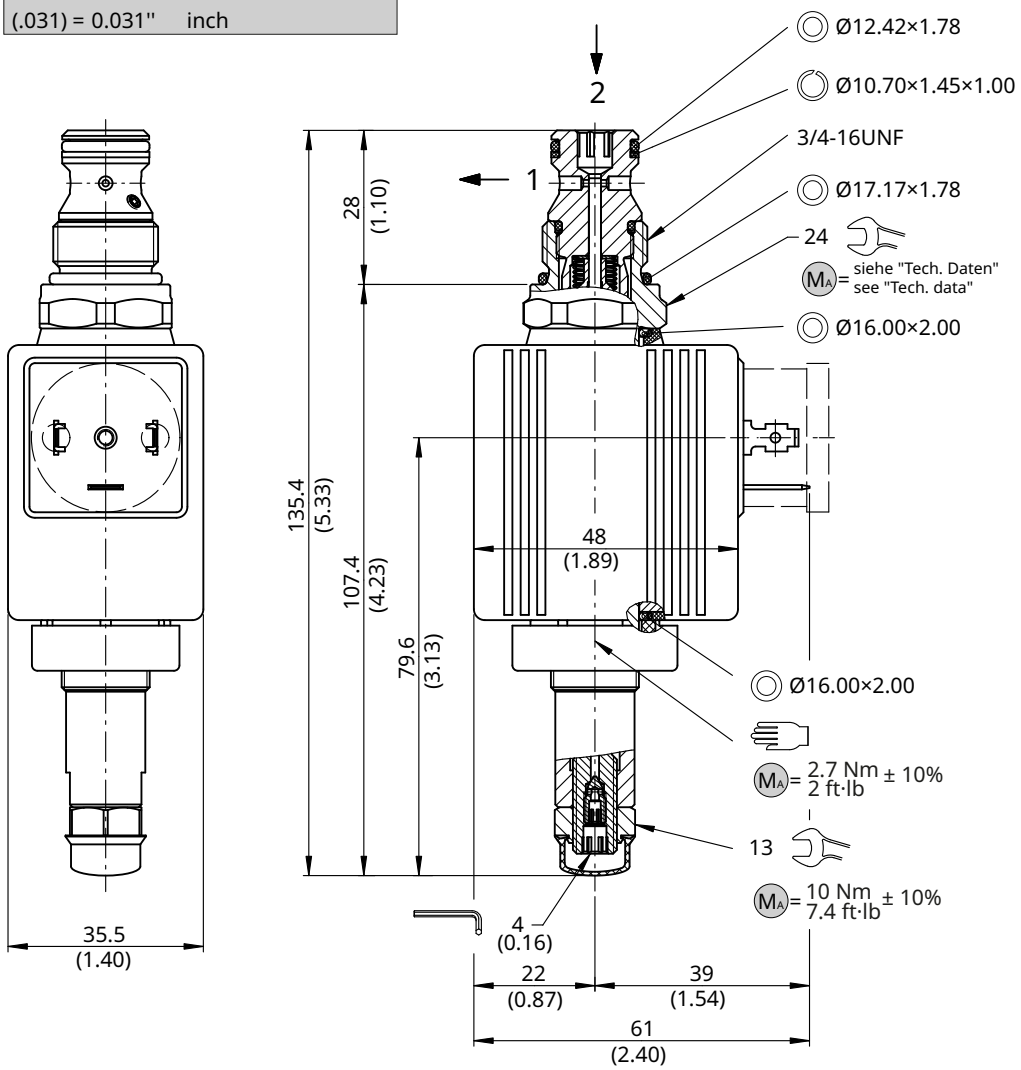

NOTE!
- Observe tightening torques M_A.
- Mount the valve preferably suspended (automatic air bleed).
- The valve is factory-set, no further adjustments are necessary.

IMPORTANT!
Prerequisite to achieve the valve's maximum performance rating:
- the solenoid is mounted aligned as depicted.
- mounted in a steel body.

ATTENTION!
Only qualified personnel with mechanical skills may carry out the following work:
- installation and, if necessary, adjustment.
- replacement of slip-on solenoid coil, if present (solenoid coil type; see "Technical Data").
- inspection and, if necessary, replacement of the seals shown in the illustration. New seals must only be installed after being oiled or greased (seal kit; see "Technical Data").

ATTENTION!
To prevent any pressure surges, port 1 must be routed to tank with the least possible backpressure. Any tank pressure acting at port 1 is additive to the pressure setting at the main port 2.

Emergency pressure setting

Optionally, the proportional pressure screw-in cartridge valves can be supplied with an integral manual emergency pressure setting. If a proportional solenoid is faulty, for example, this manual pressure setting enables the required pressure to be set mechanically up to max. 60% of the nominal pressure. The manual pressure setting is not designed for adjusting the pressure in a dynamic control mode. The following steps must be observed.

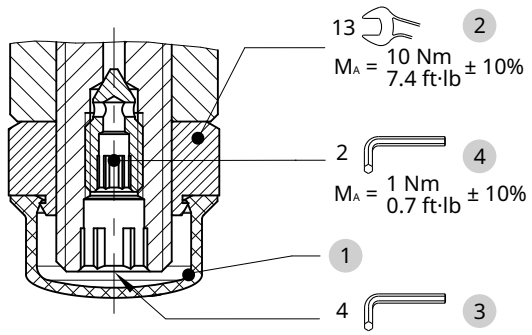

1. Remove the protective cap 1
2. Loosen the lock nut 2
3. Screw-in (turn to right) the adjusting spindle 3 until the required pressure is set.
4. Tighten the lock nut 2 to the specified torque.
5. Fit the protective cap 1

NOTE!
Any changes to the emergency pressure setting have a direct impact on the factory setting.

Reset to factory settings

To reset the proportional pressure-relief cartridges to their initial position (the factory setting), a constant flow rate and a pressure gauge that measures the pressure in the input port are needed. The pressure setting must not exceed the nominal pressure of the spring range in use. The following steps must be observed.

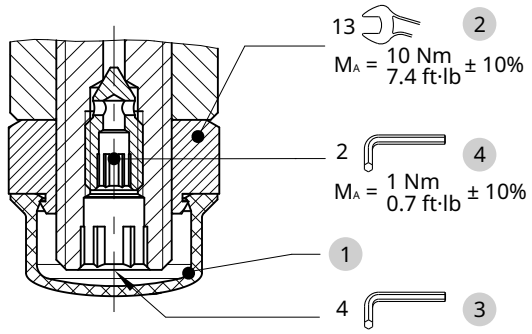

1. Ensure that the solenoid coil is de-energized
2. Remove the protective cap 1
3. Loosen the lock nut 2
4. Unscrew the adjusting spindle 3 to its end-stop
5. Screw-in the adjusting spindle 3 until the pressure on the gauge reaches the nominal pressure (pN) of the spring range in use
6. Tighten the lock nut 2 to the specified torque
7. Fit the protective cap 1

Air-bleeding

The integrated air-bleed screw allows the proportional pressure valves to be vented if necessary. If the screw-in valve is mounted as preferred (solenoid-coil hanging), it is self-venting. To vent the valve manually, follow the steps below.

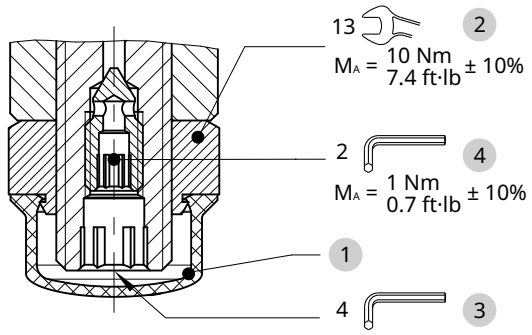

1. Remove the protective cap 1
2. Loosen the air-bleed screw 4 approx. 2 turns
3. Switch the valve ON/OFF several times until no more air bubbles escape
4. Tighten the air-bleed screw 4 to the specified torque
5. Fit the protective cap 1

Ordering code

Ex. D B D T C - 1 L G - 025 - 4 _ - 1 24 D _ _

D	=	pressure-control valve
B	=	pressure-control valve
D	=	direct acting
T	=	electrically operated, COIL 36X48, proportional
C ... Q	=	standard model according to valid data sheet
Z ... R	=	special model (on request)
1	=	pressure relief (with internal control oil outlet)
L	=	cavity type AL
G	=	proportional solenoid, inverse type (pulling)
025	=	pressure range ... 25 bar
063	=	pressure range ... 63 bar
100	=	pressure range ... 100 bar
160	=	pressure range ... 160 bar
230	=	pressure range ... 230 bar
350	=	pressure range ... 350 bar
2	=	nominal size 2 for pressure ranges 350 and 230
3	=	nominal size 3 for pressure ranges 160 and 100
4	=	nominal size 4 for pressure ranges 063 and 025
N	=	NBR (nitril-butadien-rubber / BUNA) seals **(standard)**
V	=	FKM (fluorocarbon rubber / VITON) seals (special seals on request)
1...9	=	technical design no. (omit by ordering)
...	=	voltage e.g. 24 (24 V)
D	=	current DC
G	=	DIN EN 175301-803 connection 3-pole 2 P+E **(standard)** (IP 65)
GR	=	DIN EN 175301-803 connection 3-pole 2 P+E, with protection diode (IP 65)
J	=	Junior Timer plug connection 2-pole radial (IP 65)
JR	=	Junior Timer plug connection 2-pole radial, with protection diode (IP 65)
U	=	Deutsch plug connection DT04-2P 2-pole radial (IP 67/69K)
UR	=	Deutsch plug connection DT04-2P 2-pole radial, with protection diode (IP 67/69K)
		other plug-variants, please consult BUCHER.
(blank)	=	connection without mating plug **(standard)**
Q	=	only connection "G" and "GR" with mating plug

mating plug not supplied

IMPORTANT!
Not every combination of voltage values and plug connections available.

Related data sheets

Reference	Description
400-P-040011	form tools
400-P-040171	cavity AL
400-P-720101	threaded port body GALA
400-P-120112	solenoid coil Coil 36X48-161

info.ch@bucherhydraulics.com **www.bucherhydraulics.com**

© 2026 by Bucher Hydraulics AG Frutigen, 3714 Frutigen, Switzerland

All rights reserved.
Data is provided for the purpose of product description only, and must not be construed as warranted characteristics in the legal sense. The information does not relieve users from the duty of conducting their own evaluations and tests. Because the products are subject to continual improvement, we reserve the right to amend the product specifications contained in this catalogue.

BUCHER hydraulics
WWW.SUMY.IR

Pressure valve
Relief function

Q_{max} = 60 l/min, p_{max} = 400 bar
Pilot operated, main stage in spool type, proportional solenoid
Type series: DBVSA-1L...

- Screw-in cartridge valve for cavity AL
- All external parts with zinc-nickel plating according to DIN EN ISO 19598
- Installation in threaded port body type GALA
- Seated pilot stage
- Fail-safe function
- Excellent stability over the whole pressure and flow range
- High pressure wet-armature solenoids
- The slip-on coil can be rotated, and it can be replaced without opening the hydraulic envelope
- Various plug-connector systems and voltages are available

Obsolete

Symbol

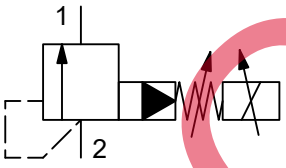

Description

The proportional pressure-reducing valves, series DBVS_-1L... , are size 5, pilot-operated, high performance screw-in valves with a 3/4-16 UNF-2A mounting thread. They consist of a spool-type main stage and a leak-free, poppet-type pilot stage with a rising characteristic. Thanks to the damp ing of the solenoid armature, these pressure-relief car tridges exhibit excellent stability over the whole pressure and flow range. With these proportional pressure-relief car tridges, the relief pressure is dependent on the electrical control current and can be continuously varied. Any pressure at port 1 is additive to the valve setting at port 2, therefore port 1 should preferably be con nected directly to tank. In control mode, the relief pressure is proportional to the change in the required value (amplifier output current). To obtain a reliable pressure setting over the entire pressure range, the overall pressure range is divided into different pressure levels. These valves are mainly used in certain mobile and industrial applications to limit the system pressure. The setting is by means of an adjusting spindle. The slip-on coils can be replaced without opening the hydraulic envelope and can be positioned at any angle through 360°. All external parts of the screw-in valves are zinc-nickel plated and are thus

suitable for use in the harshest operating environments. For installation and further information, please refer to the section related data sheets.

Technical data

General characteristics	Description, value, unit
Function group	pressure valve
Function	relief function
Design	screw-in cartridge valve
Controls	proportional solenoid
Characteristic	pilot operated, main stage in spool type
MTTFd value	150 years
Construction size	NG 5
Thread size	3/4-16 UNF-2A
Mounting attitude	unrestricted (preferably vertical, coil down)
Weight	0.40 kg
Cavity acc. factory standard	AL
Tightening torque steel	40 Nm
Tightening torque aluminium	40 Nm
Tightening torque tolerance	± 10 %
Minimum ambient temperature	- 30 °C
Maximum ambient temperature	+ 50 °C
Surface protection	all external parts with zinc-nickel plating according to DIN EN ISO 19598
Sealing material	see ordering code
Seal kit order number	NBR: DS-284-N / FKM: DS-284-V

Hydraulic characteristics	Description, value, unit
Maximum operating pressure	400 bar
Restriction of the operating pressure	250 bar [1])
Maximum flow rate	60 l/min
Flow direction	see symbol
Hydraulic fluid	HL and HLP mineral oil according to DIN 51 524; other fluids on request!
Minimum fluid temperature	- 30 °C
Maximum fluid temperature	+ 70 °C
Viscosity range	15 ... 380 mm^2/s (cSt)
Recommended viscosity range	20 ... 130 mm^2/s (cSt)
Minimum fluid cleanliness (cleanlineless class according to ISO 4406:1999)	class 18/16/13
Opening pressure	...90 / ...150 / ...230 / ...300 / ...330 bar
Internal leakage flow rate	pressure range 090: ...0.15 l/min pressure range 150: ...0.25 l/min pressure range 230: ...0.36 l/min pressure range 300/330: ...0.45 l/min

NOTE!
[1]) Please note that any tank or return-line pressures acting at port 1 are additive to the pressure setting at port 2.

Obsolete

WWW.SUMY.IR

Electric characteristics	Description, value, unit
Actuator type	solenoid coil
Solenoid coils type	D36
Supply voltage DC	12/24 V DC
Supply voltage tolerance	± 10 %
Control current	12 V = 0...1400 mA / 24 V = 0...700 mA
Nominal power consumption	17 W
Relative duty cycle	100 %
Minimum ambient temperature	- 30 °C
Maximum ambient temperature	+ 50 °C
Coil resistance R	Cold value at 20°C 12 V = 5.8 Ω 24 V = 21 Ω max. warm value 12 V = 8.6 Ω 24 V = 32 Ω
Recommended PWM frequency	200 Hz
Response sensitivity with PWM	< 1 % I_N
Reproducibility with PWM	< 2 % p_N
Hysterese with PWM	2...4 % I_N
Reversal error with PWM	2...4 % I_N
Electrical connection coil	several connection types available, see ordering code
Protection class solenoid coil to ISO 20 653 / EN 60 529	IP 65 / IP 67 / IP 69K, see “Ordering code” (with appropriate mating connector and proper fitting and sealing)

Obsolete

Performance graphs

measured with oil viscosity 33.0 mm²/s (cSt)

p = f (I) Pressure adjustment

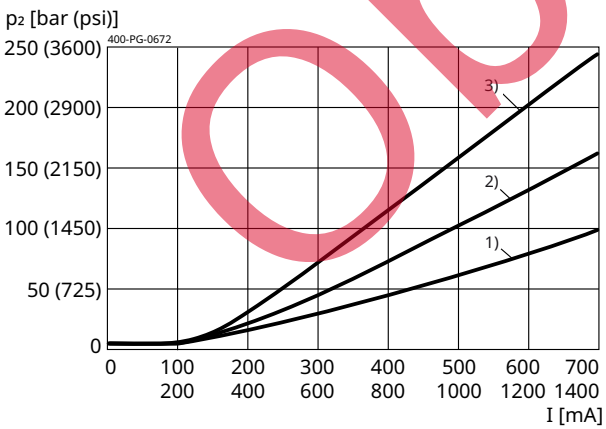

1) p_N = 90 bar (1300 psi)
2) p_N = 150 bar (2150 psi)
3) p_N = 230 bar (3350 psi)

p = f (I) Pressure adjustment

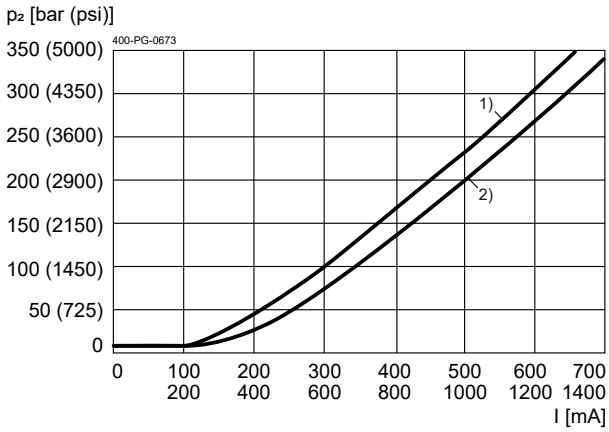

1) p_N = 300 bar (4350 psi)
2) p_N = 330 bar (4800 psi)

p = f (Q) Pressure-flow rate

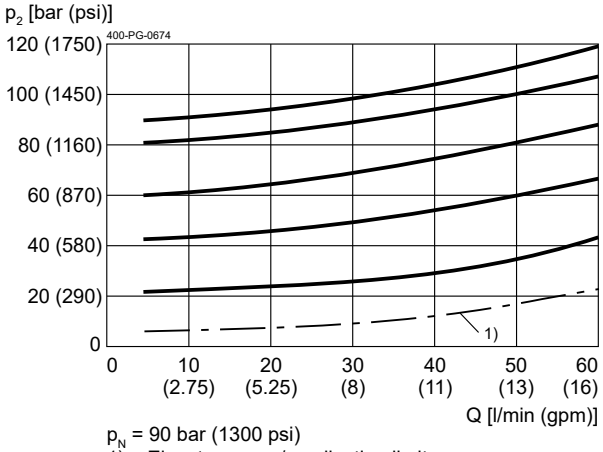

p_N = 90 bar (1300 psi)
1) = Einsatzgrenze / application limit
(p min. / I = max. mA)

p = f (Q) Pressure-flow rate

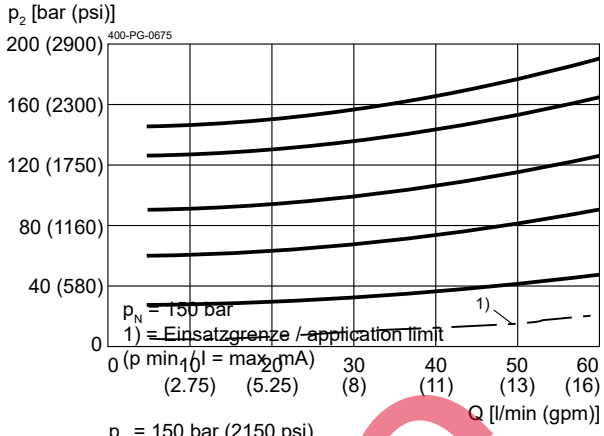

p_N = 150 bar (2150 psi)
1) = Einsatzgrenze / application limit
(p min. / I = max. mA)

p = f (Q) Pressure-flow rate

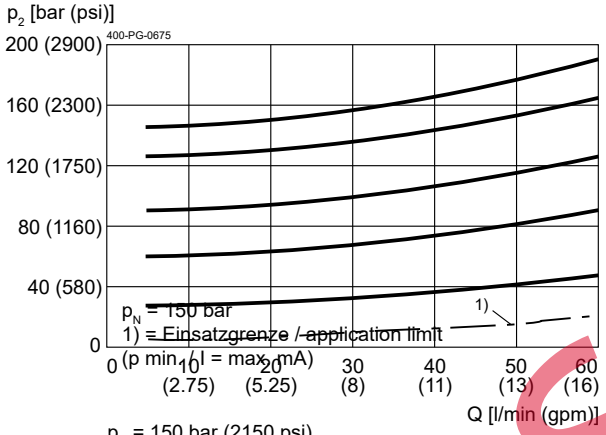

p_N = 150 bar (2150 psi)
1) = Einsatzgrenze / application limit
(p min. / I = max. mA)

p = f (Q) Pressure-flow rate

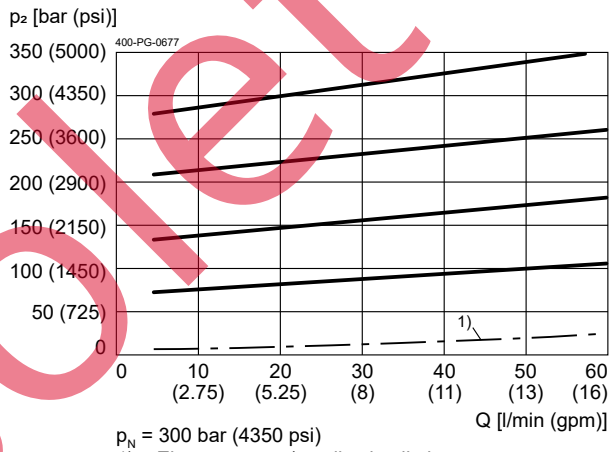

p_N = 300 bar (4350 psi)
1) = Einsatzgrenze / application limit
(p min. / I = max. mA)

p = f (Q) Pressure-flow rate

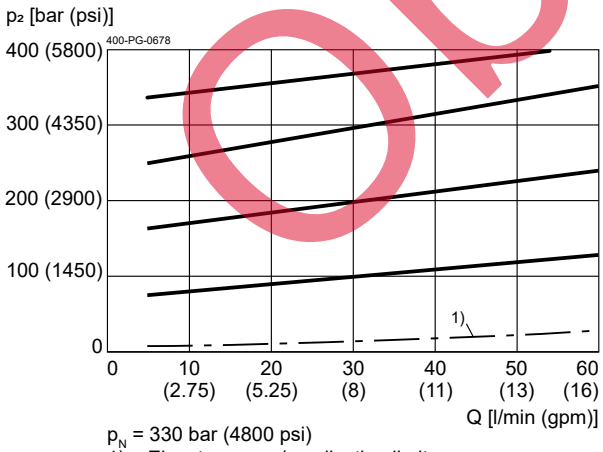

p_N = 330 bar (4800 psi)
1) = Einsatzgrenze / application limit
(p min. / I = max. mA)

Obsolete

Installation

Beispiel für die Masseinheit:
Exampel for the dimensional units:

0.79	= 0.79 mm	millimeter
(.031)	= 0.031"	inch

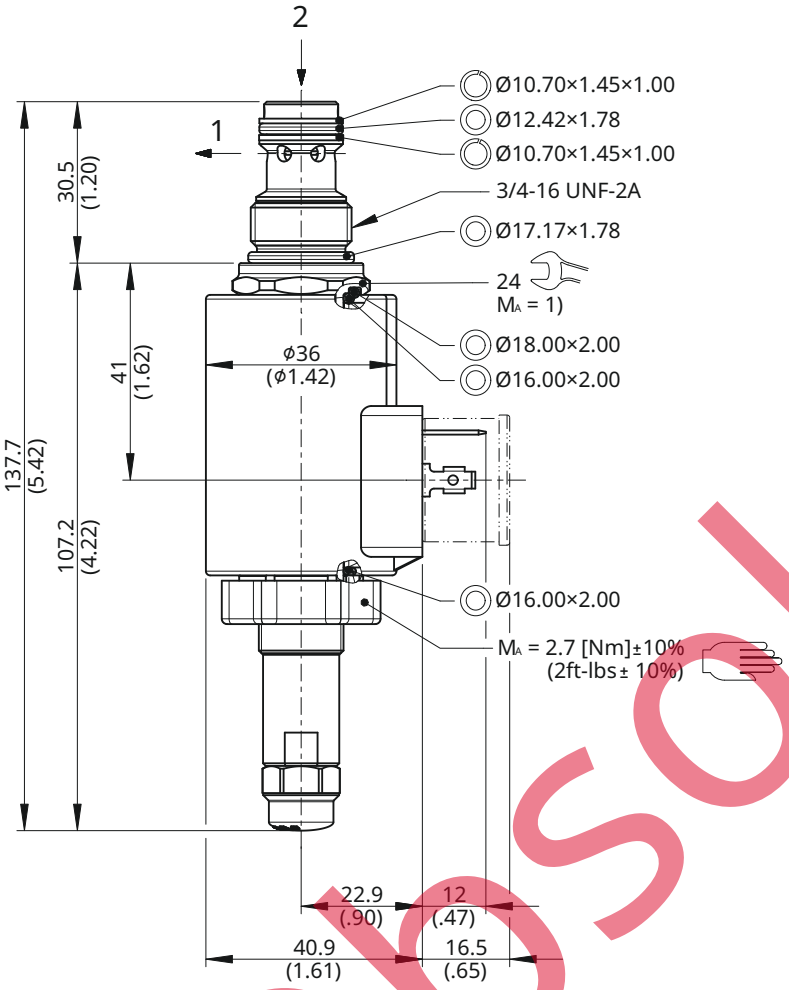

NOTE!
To achieve the screw-in valve's maximum performance rating, fit the solenoid coil as shown (with the plug pins nearest the valve body).

NOTE!
1) When fitting the screw-in cartridge valve, use the specified tightening torque. The value can be found in the chapter "Technical data".

ATTENTION!
To prevent any pressure surges, port 1 must be routed to tank with the least possible backpressure. Any tank pressure acting at port 1 is additive to the pressure setting at the main port 2.

ATTENTION!
Only qualified personnel with mechanical skills may carry out any maintenance work. Generally, the only work that should ever be undertaken is to check, and possibly replace, the seals. When changing seals, oil or grease the new seals thoroughly before fitting them.

Obsolete

Manual pressure setting

These inverse proportional pressure screw-in cartridge valves are equipped as standard with an integral manual pressure setting. If a proportional solenoid is faulty, for example, this manual pressure setting enables the required pressure to be set mechanically. The manual pressure setting can also be used to make minor pressure adjustments directly at the system. The following steps must be observed.

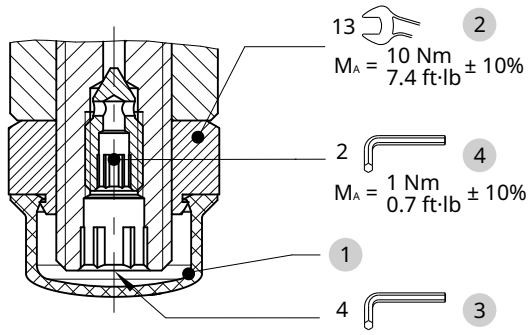

1. Remove the protective cap 1
2. Loosen the lock nut 2
3. Screw-in (turn to right) the adjusting spindle 3 until the required pressure is set.
4. Tighten the lock nut 2 to the specified torque.
5. Fit the protective cap 1

Reset to factory settings

To reset the proportional pressure-relief cartridges to their initial position (the factory setting), a constant flow rate and a pressure gauge that measures the pressure in the input port are needed. The pressure setting must not exceed the nominal pressure of the spring range in use. The following steps must be observed.

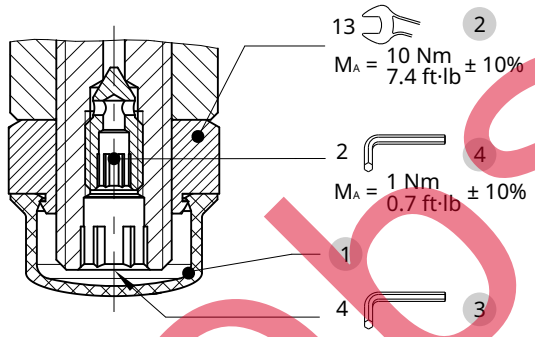

1. Ensure that the solenoid coil is de-energized
2. Remove the protective cap 1
3. Loosen the lock nut 2
4. Unscrew the adjusting spindle 3 to its end-stop
5. Screw-in the adjusting spindle 3 until the pressure on the gauge reaches the nominal pressure (pN) of the spring range in use
6. Tighten the lock nut 2 to the specified torque
7. Fit the protective cap 1

Obsolete

Air-bleeding

The integrated air-bleed screw allows the proportional pressure valves to be vented if necessary. If the screw-in valve is mounted as preferred (solenoid-coil hanging), it is self-venting. To vent the valve manually, follow the steps below.

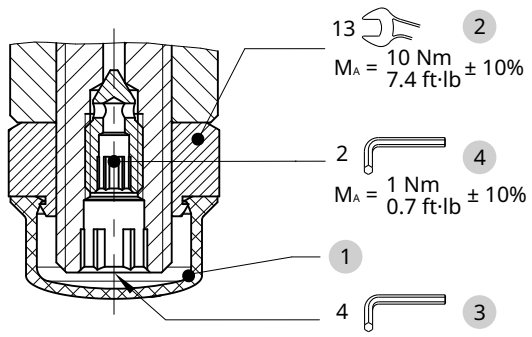

1. Remove the protective cap 1
2. Loosen the air-bleed screw 4 approx. 2 turns
3. Switch the valve ON/OFF several times until no more air bubbles escape
4. Tighten the air-bleed screw 4 to the specified torque
5. Fit the protective cap 1

Application example

The application example shows a reversible fan drive.

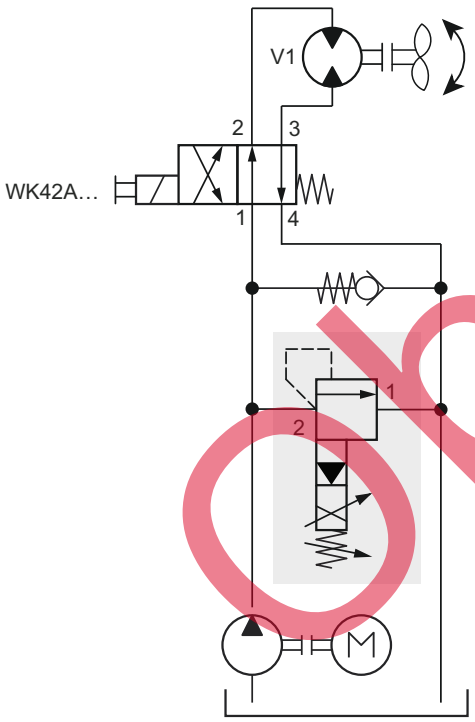

Obsolete

Ordering code

Ex. D B V S A - 1 L - 300 - 5 N - 3 24 D _

D	=	pressure-control valve
B	=	pressure relief valve
V	=	pilot operated
S	=	electrically operated, D36, 8 W, proportional
A ... Q	=	standard model according to valid data sheet
Z ... R	=	special model (on request)
1	=	pressure relief with internal spring space relief
L	=	cavity type AL
090	=	pressure range ...90 bar / ...1300 psi
150	=	pressure range ...150 bar / ...2150 psi
230	=	pressure range ...230 bar / ...3350 psi
300	=	pressure range ...300 bar / ...4350 psi
330	=	pressure range ...330 bar / ...4800 psi
5	=	nominal size 5
N	=	NBR (nitril-butadien-rubber / BUNA) seals **(standard)**
V	=	FKM (fluorocarbon rubber / VITON) seals (special seals on request)
1 ... 9	=	technical design no. (omit by ordering)
...	=	voltage e.g. 24 (24 V)
D	=	current DC

(blank)	=	DIN EN 175301-803 connection	3-pole 2 P+E **(standard)**	(IP 65)	with mating plug
T	=	DIN EN 175301-803 connection	3-pole 2 P+E, with protection diode	(IP 65)	with mating plug
M100	=	DIN EN 175301-803 connection	3-pole 2 P+E	(IP 65)	mating plug not supplied
J	=	Junior Timer plug connection	2-pole radial	(IP 65)	mating plug not supplied
JT	=	Junior Timer plug connection	2-pole radial, with protection diode	(IP 65)	mating plug not supplied
I	=	Junior Timer plug connection	2-pole axial	(IP 65)	mating plug not supplied
IT	=	Junior Timer plug connection	2-pole axial, with protection diode	(IP 65)	mating plug not supplied
D	=	Deutsch plug connection DT04-2P	2-pole 45°	(IP 67/69K)	mating plug not supplied
DT	=	Deutsch plug connection DT04-2P	2-pole 45°, with protection diode	(IP 67/69K)	mating plug not supplied

other plug-variants, please consult BUCHER.

IMPORTANT!
Not every combination of voltage values, current type and plug connections vailable.

Obsolete

Related data sheets

Reference	Description
400-P-040011	form tools
400-P-040171	cavity AL
400-P-120110	solenoid coil D36
400-P-720101	threaded port body GALA
400-P-010101	MTTFd Values for Hydraulic Valves

WWW.SUMY.IR

Obsolete

info.ch@bucherhydraulics.com www.bucherhydraulics.com

© 2026 by Bucher Hydraulics AG Frutigen, 3714 Frutigen, Switzerland

All rights reserved.
Data is provided for the purpose of product description only, and must not be construed as warranted characteristics in the legal sense. The information does not relieve users from the duty of conducting their own evaluations and tests. Because the products are subject to continual improvement, we reserve the right to amend the product specifications contained in this catalogue.

BUCHER hydraulics

WWW.SUMY.IR

Pressure valve
Relief function

Q_{max} = 60 l/min, p_{max} = 300 bar
Pilot operated, spool type, proportional solenoid with emergency override
Type series: DBVSA-1LG...

- Screw-in cartridge valve for cavity AL
- All external parts with zinc-nickel plating according to DIN EN ISO 19598
- Installation in threaded port body type GALA
- Damped design
- Seated pilot stage
- Fail-safe function
- Excellent stability over the whole pressure and flow range
- High pressure wet-armature solenoids
- The slip-on coil can be rotated, and it can be replaced without opening the hydraulic envelope
- Various plug-connector systems and voltages are available

Symbol

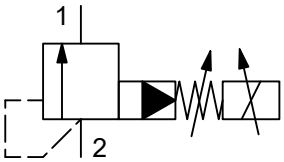

Description

The invers proportional pressure-relief valves, series DBVS_-1LG..., are size 5, pilot-operated, high performance screw-in valves with a 3/4-16 UNF-2A mounting thread. They consist of a spool-type main stage and a leak-free, poppet-type pilot stage with a falling pressure/current characteristic. Thanks to the damp ing of the solenoid armature, these pressure-relief car tridges exhibit excellent stability over the whole pressure and flow range. With these proportional pressure-relief car tridges, the relief pressure is dependent on the electrical control current and can be continuously varied. When the solenoid is de-energised (initial position), the relief pressure is the nominal pressure of the applicable spring range (failsafe function). Any pressure at port 1 is additive to the valve setting at port 2, therefore port 1 should preferably be con nected directly to tank. In control mode, the relief pressure is inversely proportional to the change in the required value (amplifier output current). To obtain a reliable pressure setting over the entire pressure range, the overall pressure range is divided into different pressure levels. If a proportional solenoid is faulty, for example, the inte-

WWW.SUMY.IR

gral manual pressure setting enables the required pressure to be set mechanically. These valves are mainly used in certain mobile and industrial applications to limit the system pressure. The setting is by means of an adjusting spindle. The slip-on coils can be replaced without opening the hydraulic envelope and can be positioned at any angle through 360°. All external parts of the screw-in valves are zinc-nickel plated and are thus suitable for use in the harshest operating environments. For installation and further information, please refer to the section related data sheets.

Technical data

General characteristics	Description, value, unit
Function group	pressure valve
Function	relief function
Design	screw-in cartridge valve
Controls	proportional solenoid with emergency override
Characteristic	pilot operated, spool type
MTTFd value	150 years
Construction size	NG 05
Thread size	3/4-16 UNF-2A
Mounting attitude	unrestricted (preferably vertical, coil down)
Weight	0.40 kg
Cavity acc. factory standard	AL
Tightening torque steel	40 Nm
Tightening torque aluminium	40 Nm
Tightening torque tolerance	± 10 %
Minimum ambient temperature	- 30 °C
Maximum ambient temperature	+ 50 °C
Surface protection	all external parts with zinc-nickel plating according to DIN EN ISO 19598
Sealing material	see ordering code
Seal kit order number	NBR: DS-284-N / FKM: DS-284-V

WWW.SUMY.IR

Hydraulic characteristics	Description, value, unit
Maximum operating pressure	300 bar
Restriction of the operating pressure	250 bar [1])
Maximum flow rate	60 l/min
Flow direction	see symbol
Hydraulic fluid	HL and HLP mineral oil according to DIN 51 524; other fluids on request!
Minimum fluid temperature	- 30 °C
Maximum fluid temperature	+ 70 °C
Viscosity range	15 ... 380 mm^2/s (cSt)
Recommended viscosity range	20 ... 130 mm^2/s (cSt)
Minimum fluid cleanliness (cleanliness class according to ISO 4406:1999)	class 18/16/13
Opening pressure	...50 / ...63 / ...100 / ...160 / ...230 / ...300 bar
Internal leakage flow rate	pressure range 050: ...0.10 l/min pressure range 063: ...0.10 l/min pressure range 100: ...0.15 l/min pressure range 160: ...0.25 l/min pressure range 230: ...0.36 l/min pressure range 300: ...0.45 l/min

NOTE!
[1]) Please note that any tank or return-line pressures acting at port 1 are additive to the pressure setting at port 2.

Electric characteristics	Description, value, unit
Actuator type	solenoid coil
Solenoid coils type	D36
Supply voltage DC	12 V DC 24 V DC
Supply voltage tolerance	± 10 %
Control current	12 V = 0...1400 mA 24 V = 0...760 mA
Nominal power consumption	19 W
Relative duty cycle	100 %
Minimum ambient temperature	- 30 °C
Maximum ambient temperature	+ 50 °C
Coil resistance R	Cold value at 20 C° 12 V = 5.8 Ω 24 V = 21 Ω max. warm value 12 V = 8.6 Ω 24 V = 32 Ω
Recommended PWM frequency	200 Hz
Response sensitivity with PWM	< 1 % I_{max}
Reproducibility with PWM	< 2 % Q_{nenn}
Hysteresis with PWM	2...4 % I_{max}
Reversal error with PWM	2...4 % I_{max}
Electrical connection coil	several connection types available, see ordering code
Protection class solenoid coil to ISO 20 653 / EN 60 529	several classes of protection available, see ordering code (with appropriate mating connector and proper fitting and sealing)

Performance graphs

measured with oil viscosity 33.0 mm²/s (cSt)

p = f (I) Pressure adjustment

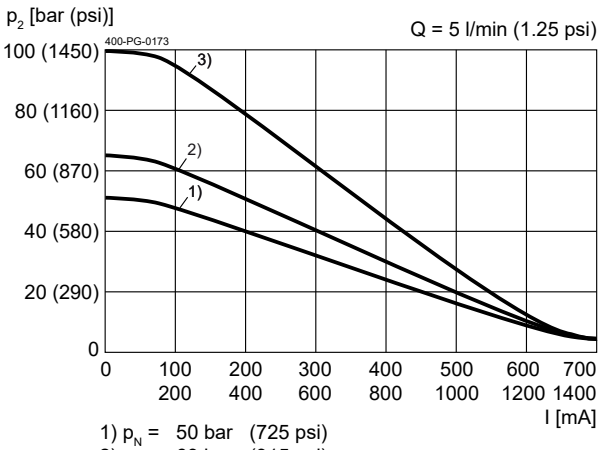

1) p_N = 50 bar (725 psi)
2) p_N = 63 bar (915 psi)
3) p_N = 100 bar (1450 psi)

p = f (I) Pressure adjustment

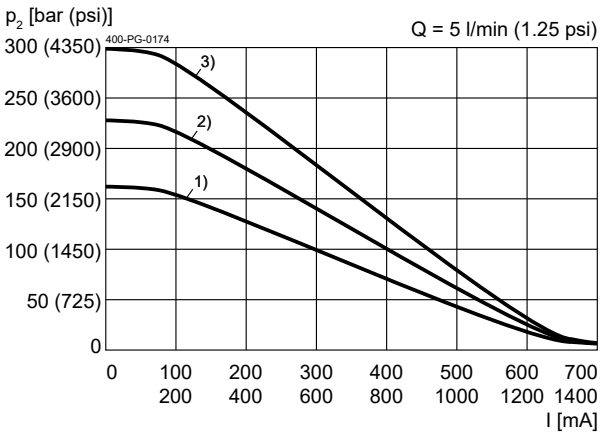

1) p_N = 160 bar (2300 psi)
2) p_N = 230 bar (3350 psi)
3) p_N = 300 bar (4350 psi)

p = f (Q) Pressure-flow rate

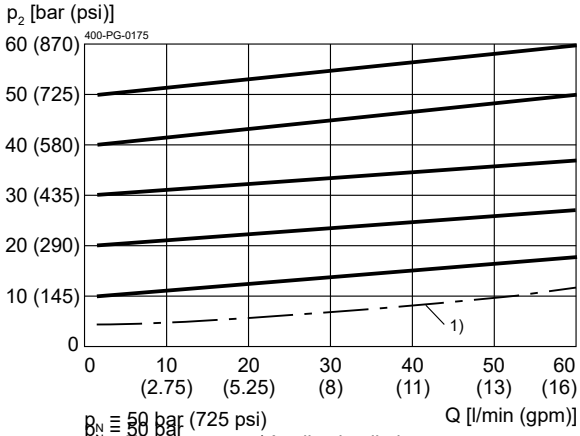

p_N = 50 bar (725 psi)
1) = Einsatzgrenze / Application limit
(p min. / I = max. mA)

p = f (Q) Pressure-flow rate

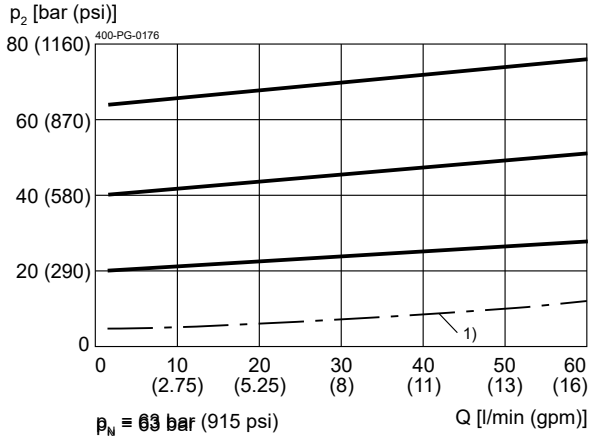

p_N = 63 bar (915 psi)
1) = Einsatzgrenze / Application limit
(p min. / I = max. mA)

p = f (Q) Pressure-flow rate

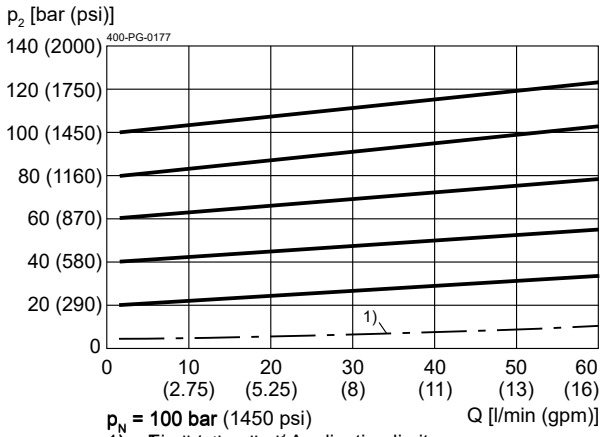

p_N = 100 bar (1450 psi)
1) = Einsatzgrenze / Application limit
(p min. / I = max. mA)

p = f (Q) Pressure-flow rate

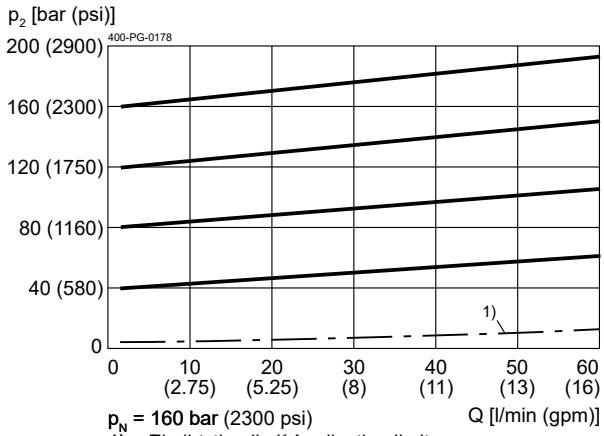

p_N = 160 bar (2300 psi)
1) = Einsatzgrenze / Application limit
(p min. / I = max. mA)

p = f (Q) Pressure-flow rate

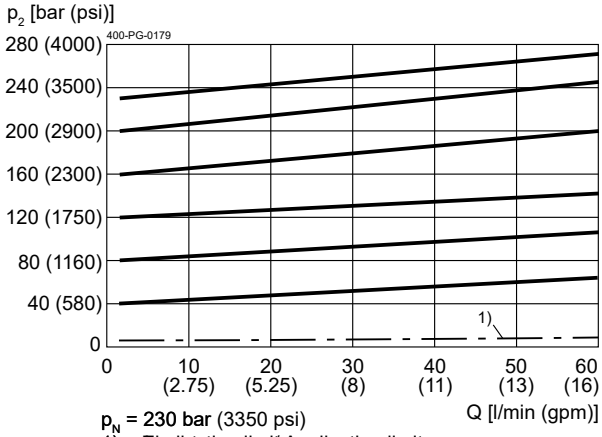

p_N = 230 bar (3350 psi)
1) = Einsatzgrenze / Application limit
(p min. / I = max. mA)

p = f (Q) Pressure-flow rate

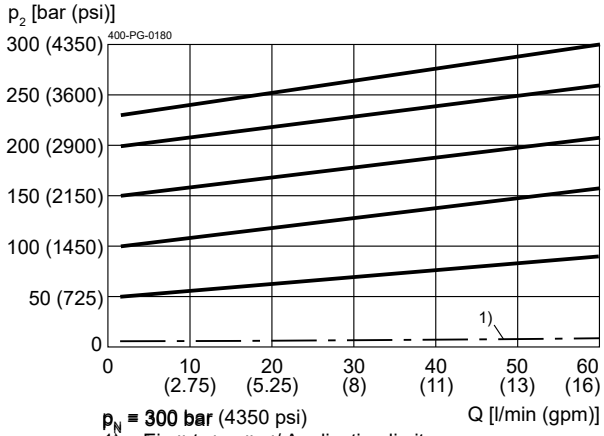

p_N = 300 bar (4350 psi)
1) = Einsatzgrenze / Application limit
(p min. / I = max. mA)

Installation

Beispiel für die Masseinheit:
Example for the dimensional units:

0.79 = 0.79 mm millimeter
(.031) = 0.031'' inch

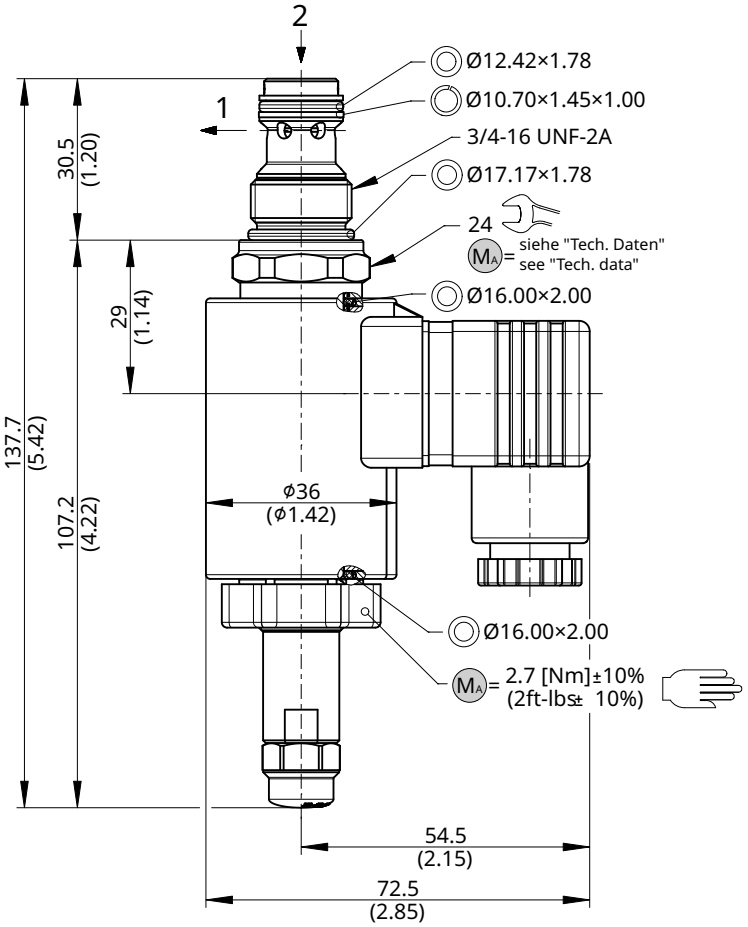

NOTE!
Prerequisite to achieve the valve's maximum performance rating:
- the solenoid is mounted aligned as depicted.
- mounted in a steel body.

NOTE!
- Observe tightening torques M_A .
- Mount the valve preferably suspended (automatic air bleed).
- The valve is factory-set, no further adjustments are necessary.

ATTENTION!
To prevent any pressure surges, port 1 must be routed to tank with the least possible backpressure. Any tank pressure acting at port 1 is additive to the pressure setting at the main port 2.

ATTENTION!
Only qualified personnel with mechanical skills may carry out the following work:
- installation and, if necessary, adjustment.
- replacement of slip-on solenoid coil, if present (solenoid coil type; see "Technical Data").
- inspection and, if necessary, replacement of the seals shown in the illustration. New seals must only be installed after being oiled or greased (seal kit; see "Technical Data").

Manual pressure setting

These inverse proportional pressure screw-in cartridge valves are equipped as standard with an integral manual pressure setting. If a proportional solenoid is faulty, for example, this manual pressure setting enables the required pressure to be set mechanically. The manual pressure setting can also be used to make minor pressure adjustments directly at the system. The following steps must be observed.

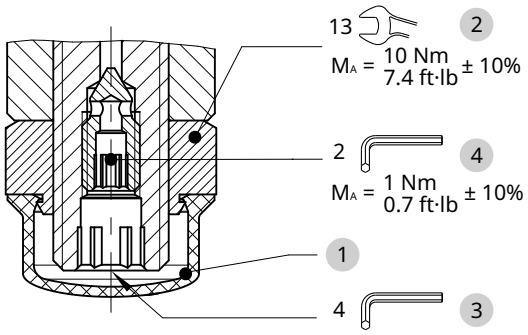

1. Remove the protective cap 1
2. Loosen the lock nut 2
3. Screw-in (turn to right) the adjusting spindle 3 until the required pressure is set.
4. Tighten the lock nut 2 to the specified torque.
5. Fit the protective cap 1

Reset to factory settings

To reset the proportional pressure-relief cartridges to their initial position (the factory setting), a constant flow rate and a pressure gauge that measures the pressure in the input port are needed. The pressure setting must not exceed the nominal pressure of the spring range in use. The following steps must be observed.

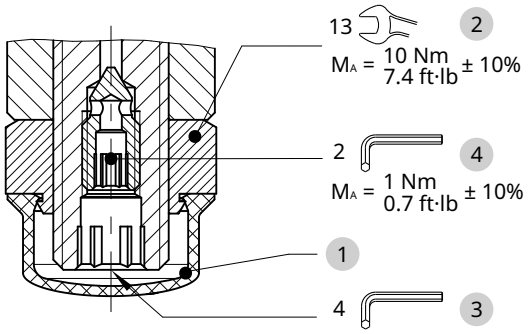

1. Ensure that the solenoid coil is de-energized
2. Remove the protective cap 1
3. Loosen the lock nut 2
4. Unscrew the adjusting spindle 3 to its end-stop
5. Screw-in the adjusting spindle 3 until the pressure on the gauge reaches the nominal pressure (pN) of the spring range in use
6. Tighten the lock nut 2 to the specified torque
7. Fit the protective cap 1

Air-bleeding

The integrated air-bleed screw allows the proportional pressure valves to be vented if necessary. If the screw-in valve is mounted as preferred (solenoid-coil hanging), it is self-venting. To vent the valve manually, follow the steps below.

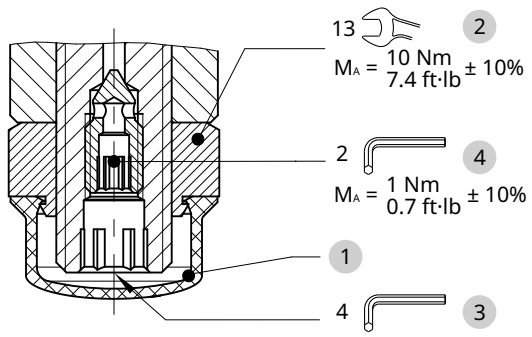

1. Remove the protective cap 1
2. Loosen the air-bleed screw 4 approx. 2 turns
3. Switch the valve ON/OFF several times until no more air bubbles escape
4. Tighten the air-bleed screw 4 to the specified torque
5. Fit the protective cap 1

Application example

The application example shows a reversible fan drive.

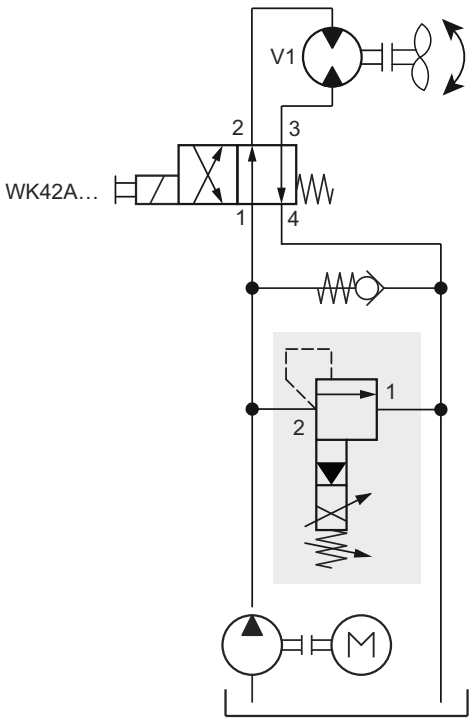

WWW.SUMY.IR

Ordering code

Ex. D B V S A - 1 L G - 300 - 5 N - 3 24 D _

D	=	pressure-control valve
B	=	pressure relief valve
V	=	pilot operated
S	=	electrically operated, D36, 8 W, proportional
A ... Q	=	standard model according to valid data sheet
Z ... R	=	special model (on request)
1	=	pressure relief with internal spring space relief
L	=	cavity type AL
G	=	proportional solenoid, inverse type (pulling)
050	=	pressure range ...50 bar / ...725 psi
063	=	pressure range ...63 bar / ...915 psi
100	=	pressure range ...100 bar / ...1450 psi
160	=	pressure range ...160 bar / ...2300 psi
230	=	pressure range ...230 bar / ...3350 psi
300	=	pressure range ...300 bar / ...4350 psi
5	=	nominal size 5
N	=	NBR (nitril-butadien-rubber / BUNA) seals **(standard)**
V	=	FKM (fluorocarbon rubber / VITON) seals (special seals on request)
1 ... 9	=	technical design no. (omit by ordering)
...	=	voltage e.g. 24 (24 V)
D	=	current DC

(blank)	=	DIN EN 175301-803 connection	3-pole 2 P+E **(standard)**	(IP 65)	with mating plug
T	=	DIN EN 175301-803 connection	3-pole 2 P+E, with protection diode	(IP 65)	with mating plug
M100	=	DIN EN 175301-803 connection	3-pole 2 P+E	(IP 65)	mating plug not supplied
J	=	Junior Timer plug connection	2-pole radial	(IP 65)	mating plug not supplied
JT	=	Junior Timer plug connection	2-pole radial, with protection diode	(IP 65)	mating plug not supplied
I	=	Junior Timer plug connection	2-pole axial	(IP 65)	mating plug not supplied
IT	=	Junior Timer plug connection	2-pole axial, with protection diode	(IP 65)	mating plug not supplied
D	=	Deutsch plug connection DT04-2P	2-pole 45°	(IP 67/69K)	mating plug not supplied
DT	=	Deutsch plug connection DT04-2P	2-pole 45°, with protection diode	(IP 67/69K)	mating plug not supplied

other plug-variants, please consult BUCHER.

IMPORTANT!
Not every combination of voltage values, current type and plug connections vailable.

Related data sheets

Reference	Description
400-P-040011	form tools
400-P-040171	cavity AL
400-P-720101	threaded port body GALA
400-P-120110	solenoid coil D36
400-P-010101	MTTFd Values for Hydraulic Valves

info.ch@bucherhydraulics.com **www.bucherhydraulics.com**

© 2026 by Bucher Hydraulics AG Frutigen, 3714 Frutigen, Switzerland

All rights reserved.
Data is provided for the purpose of product description only, and must not be construed as warranted characteristics in the legal sense. The information does not relieve users from the duty of conducting their own evaluations and tests. Because the products are subject to continual improvement, we reserve the right to amend the product specifications contained in this catalogue.

WWW.SUMY.IR

Pressure valve
Relief function

Q_{max} = 120 l/min, p_{max} = 300 bar
Pilot operated, spool type, proportional solenoid with emergency override
Type series: DBVSA-1CG...

- Screw-in cartridge valve for cavity DC
- All external parts with zinc-nickel plating according to DIN EN ISO 19598
- Installation in threaded port body type DC-12
- Damped design
- Seated pilot stage
- Fail-safe function
- Excellent stability over the whole pressure and flow range
- High pressure wet-armature solenoids
- The slip-on coil can be rotated, and it can be replaced without opening the hydraulic envelope
- Various plug-connector systems and voltages are available

Symbol

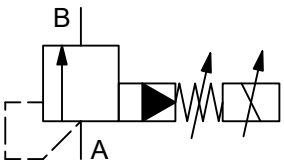

Description

The invers proportional pressure-relief valves, series DBVS_-1CG..., are size 10, pilot-operated, high performance screw-in valves with a M24x1.5 mounting thread. They consist of a spool-type main stage and a leak-free, poppet-type pilot stage with a falling pressure/current characteristic. Thanks to the damp ing of the solenoid armature, these pressure-relief car tridges exhibit excellent stability over the whole pressure and flow range. With these proportional pressure-relief car tridges, the relief pressure is dependent on the electrical control current and can be continuously varied. When the solenoid is de-energised (initial position), the relief pressure is the nominal pressure of the applicable spring range (failsafe function). Any pressure at port B is additive to the valve setting at port A, therefore port B should preferably be con nected directly to tank. In control mode, the relief pressure is inversely proportional to the change in the required value (amplifier output current). To obtain a reliable pressure setting over the entire pressure range, the overall pressure range is divided into different pressure levels. If a proportional solenoid is faulty, for example, the integral manual pressure

WWW.SUMY.IR

setting enables the required pressure to be set mechanically. These valves are mainly used in certain mobile and industrial applications to limit the system pressure. The setting is by means of an adjusting spindle. The slip-on coils can be replaced without opening the hydraulic envelope and can be positioned at any angle through 360°. All external parts of the screw-in valves are zinc-nickel plated and are thus suitable for use in the harshest operating environments. For installation and further information, please refer to the section related data sheets.

Technical data

General characteristics	Description, value, unit
Function group	pressure valve
Function	relief function
Design	screw-in cartridge valve
Controls	proportional solenoid with emergency override
Characteristic	pilot operated, spool type
Construction size	NG 10
Thread size	M24×1,5
Mounting attitude	unrestricted (preferably vertical, coil down)
Weight	0.55 kg
Cavity acc. factory standard	DC
Tightening torque steel	65 Nm
Tightening torque aluminium	50 Nm
Tightening torque tolerance	± 10 %
Minimum ambient temperature	- 30 °C
Maximum ambient temperature	+ 50 °C
Surface protection	all external parts with zinc-nickel plating according to DIN EN ISO 19598
Sealing material	see ordering code
Seal kit order number	NBR: DS-298-N / FKM: DS-298-V

WWW.SUMY.IR

Hydraulic characteristics	Description, value, unit
Maximum operating pressure	300 bar
Restriction of the operating pressure	250 [1])
Maximum flow rate	120 l/min
Flow direction	see symbol
Hydraulic fluid	HL and HLP mineral oil according to DIN 51 524; other fluids on request!
Minimum fluid temperature	- 30 °C
Maximum fluid temperature	+ 70 °C
Viscosity range	15 ... 380 mm^2/s (cSt)
Recommended viscosity range	20 ... 130 mm^2/s (cSt)
Minimum fluid cleanliness (cleanlineless class according to ISO 4406:1999)	class 18/16/13
Opening pressure	...50 / ...63 / ...100 / ...160 / ...230 / ...300 bar
Internal leakage flow rate	pressure range 050: ...0.10 l/min pressure range 063: ...0.10 l/min pressure range 100: ...0.13 l/min pressure range 160: ...0.16 l/min pressure range 230: ...0.24 l/min pressure range 300: ...0.30 l/min

ATTENTION!
If there is pressure at the secondary connection, this is added to the set pressure value.

Electric characteristics	Description, value, unit
Actuator type	solenoid coil
Solenoid coils type	D36
Supply voltage DC	12/24 V DC
Supply voltage tolerance	± 10 %
Control current	12 V = 0...1400 mA / 24 V = 0...760 mA
Nominal power consumption	19 W
Relative duty cycle	100 %
Coil resistance R	Cold value at 20°C 12 V = 5.8 Ω 24 V = 21 Ω max. warm value 12 V = 8.6 Ω 24 V = 32 Ω
Recommended PWM frequency	200 Hz
Response sensitivity with PWM	< 1 % I_N
Reproducibility with PWM	< 2 % p_N
Hysterese with PWM	2...4 % I_N
Reversal error with PWM	2...4 % I_N
Electrical connection coil	DIN EN 175301-803, 3-pole 2 P+E (IP 65)
Protection class solenoid coil to ISO 20 653 / EN 60 529	IP 65 / IP 67 / IP 69K, see “Ordering code” (with appropriate mating connector and proper fitting and sealing)

Performance graphs

measured with oil viscosity 33.0 mm²/s (cSt)

p = f (I) Pressure adjustment

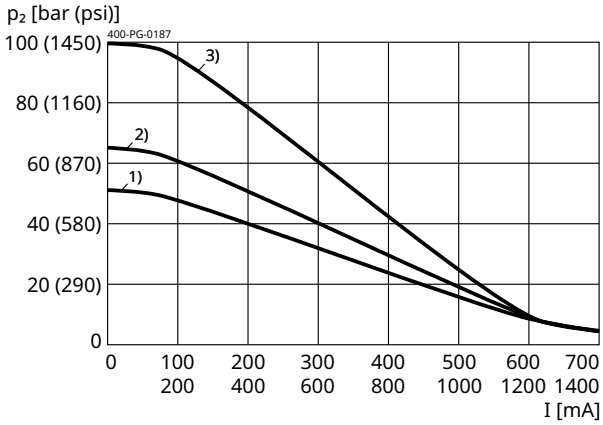

1) p_n = 50 bar (725 psi)
2) p_n = 63 bar (915 psi)
3) p_n = 100 bar (1450 psi)

p = f (I) Pressure adjustment

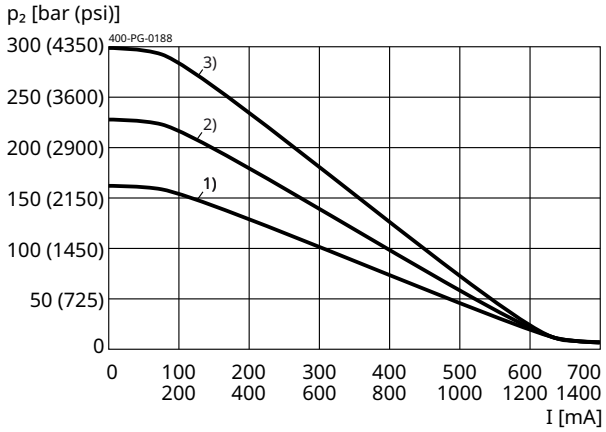

1) p_n = 160 bar (2300 psi)
2) p_n = 230 bar (3350 psi)
3) p_n = 300 bar (4350 psi)

p = f (Q) Pressure-flow rate

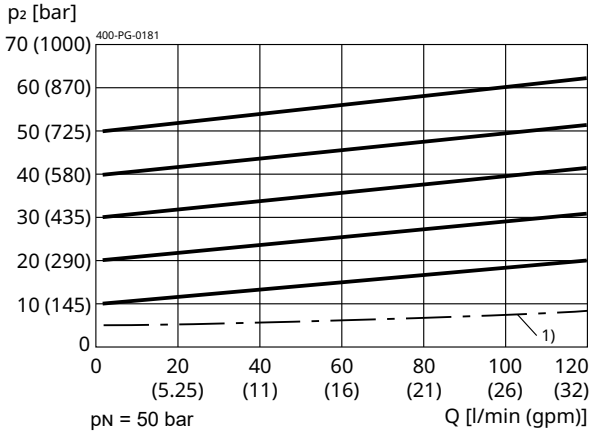

pN = 50 bar
p₁ = 50 bar (725 psi)
(p = Application max. mA)

p = f (Q) Pressure-flow rate

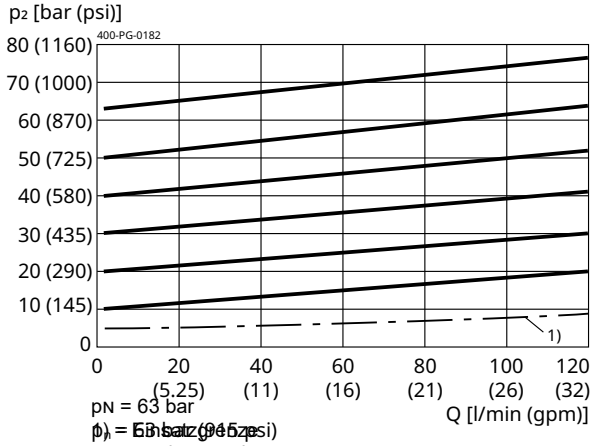

pN = 63 bar
p₁ = 63 bar (915 psi)
(p = Application max. mA)

p = f (Q) Pressure-flow rate

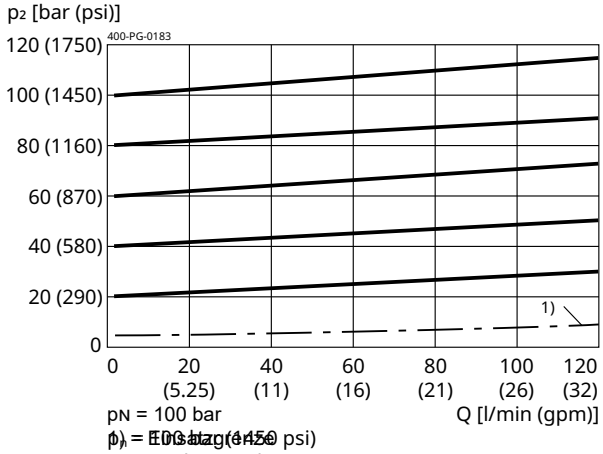

pN = 100 bar
p₁ = 100 bar (1450 psi)
(p = Application max. mA)

p = f (Q) Pressure-flow rate

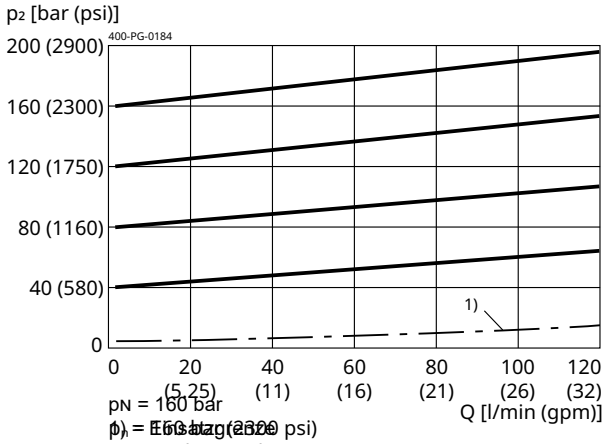

pN = 160 bar
p₁ = 160 bar (2300 psi)
(p = Application max. mA)

p = f (Q) Pressure-flow rate

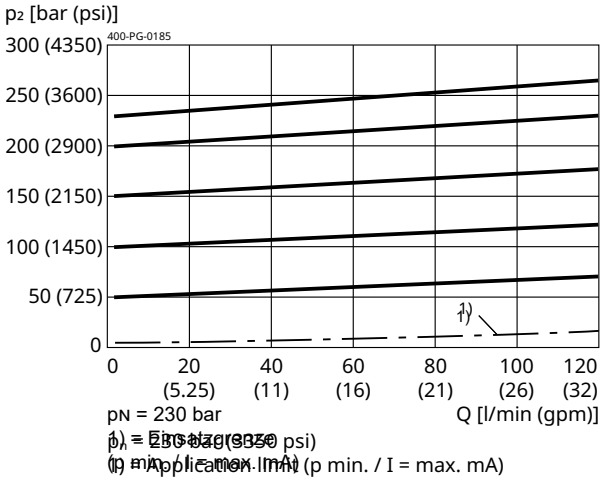

p = f (Q) Pressure-flow rate

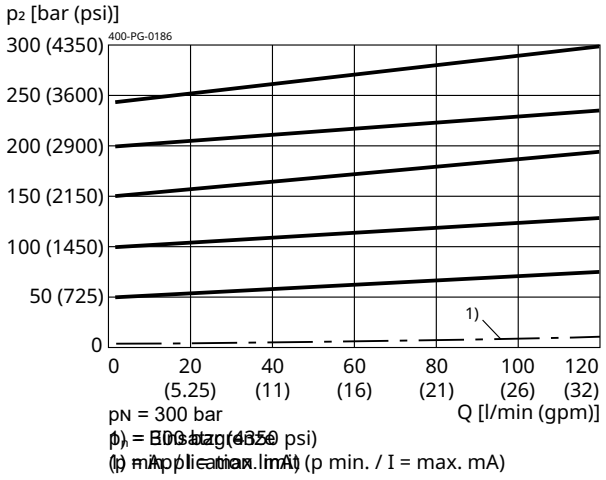

Installation

Beispiel für die Masseinheit:
Exampel for the dimensional units:

0.79	= 0.79 mm	millimeter
(.031)	= 0.031"	inch

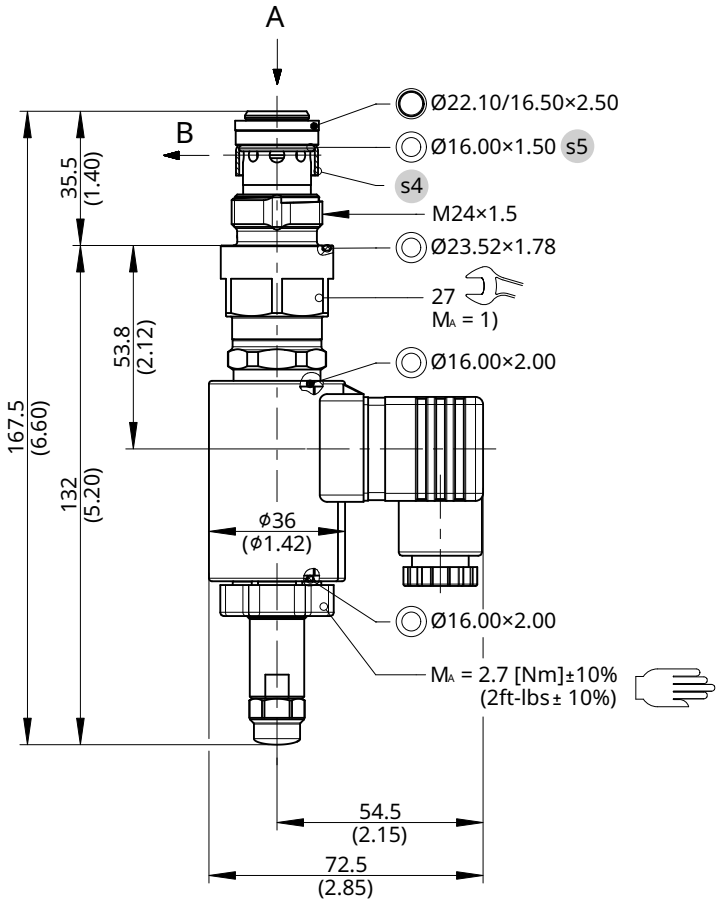

NOTE!
1) When fitting the screw-in cartridge valve, use the specified tightening torque. The value can be found in the chapter "Technical data".

NOTE!
To achieve the screw-in valve's maximum performance rating, fit the solenoid coil as shown (with the plug pins nearest the valve body). The valve must be installed in a steel body.

NOTE!
The seals are not available individually. The seal kit order number can be found in the chapter "Technical data".

NOTE!
For installation in an aluminium housing, we recommend using the “S” version. This is equipped with a steel ring s4 and plastic ring s5 to protect the housing from possible damage.

NOTE!
To ensure proper function, the valve should be air-bled before commissioning. Refer to chapter "Air-bleeding before commissioning"

ATTENTION!
Only qualified personnel with mechanical skills may carry out any maintenance work. Generally, the only work that should ever be undertaken is to check, and possibly replace, the seals. When changing seals, oil or grease the new seals thoroughly before fitting them.

Manual pressure setting

These inverse proportional pressure screw-in cartridge valves are equipped as standard with an integral manual pressure setting. If a proportional solenoid is faulty, for example, this manual pressure setting enables the required pressure to be set mechanically. The manual pressure setting can also be used to make minor pressure adjustments directly at the system. The following steps must be observed.

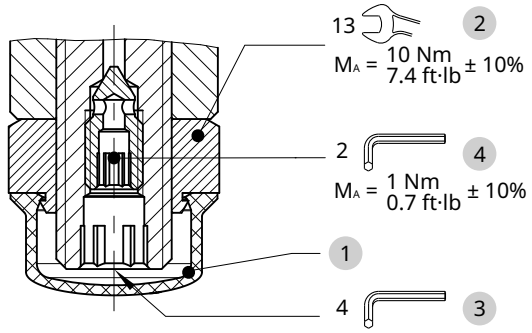

1. Remove the protective cap 1
2. Loosen the lock nut 2
3. Screw-in (turn to right) the adjusting spindle 3 until the required pressure is set.
4. Tighten the lock nut 2 to the specified torque.
5. Fit the protective cap 1

Reset to factory settings

To reset the proportional pressure-relief cartridges to their initial position (the factory setting), a constant flow rate and a pressure gauge that measures the pressure in the input port are needed. The pressure setting must not exceed the nominal pressure of the spring range in use. The following steps must be observed.

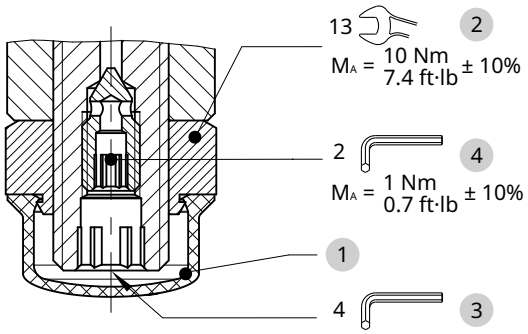

1. Ensure that the solenoid coil is de-energized
2. Remove the protective cap 1
3. Loosen the lock nut 2
4. Unscrew the adjusting spindle 3 to its end-stop
5. Screw-in the adjusting spindle 3 until the pressure on the gauge reaches the nominal pressure (pN) of the spring range in use
6. Tighten the lock nut 2 to the specified torque
7. Fit the protective cap 1

Air-bleeding

The integrated air-bleed screw allows the proportional pressure valves to be vented if necessary. If the screw-in valve is mounted as preferred (solenoid-coil hanging), it is self-venting. To vent the valve manually, follow the steps below.

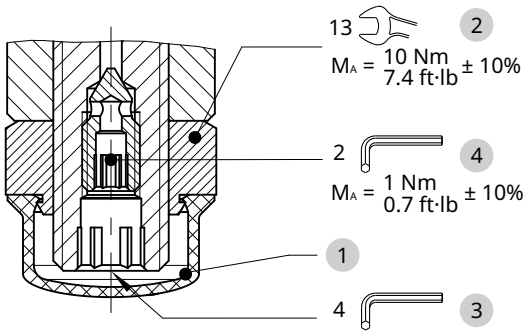

1. Remove the protective cap 1
2. Loosen the air-bleed screw 4 approx. 2 turns
3. Switch the valve ON/OFF several times until no more air bubbles escape
4. Tighten the air-bleed screw 4 to the specified torque
5. Fit the protective cap 1

WWW.SUMY.IR

Application example

The application example shows a reversible fan drive.

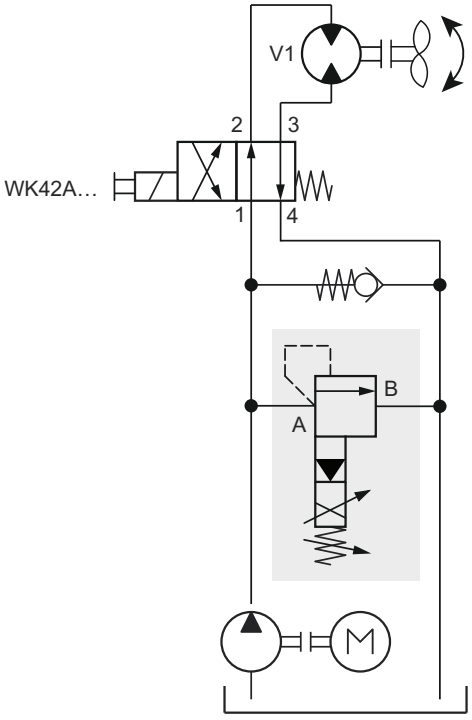

Ordering code

Ex. D B V S A _ - 1 C G - 300 - 10 N - 3 24 D _

D	=	pressure-control valve
B	=	pressure relief valve
V	=	pilot operated
S	=	electrically operated, D36, 8 W, proportional
A ... Q	=	standard model according to valid data sheet
Z ... R	=	special model (on request)
(blank)	=	without steel ring (for use in steel housing)
S	=	with steel ring (for use in aluminium housing)
1	=	pressure relief with internal spring space relief
C	=	cavity type DC
G	=	proportional solenoid, inverse type (pulling)
050	=	pressure range ...50 bar / ...725 psi
063	=	pressure range ...63 bar / ...915 psi
100	=	pressure range ...100 bar / ...1450 psi
160	=	pressure range ...160 bar / ...2300 psi
230	=	pressure range ...230 bar / ...3350 psi
300	=	pressure range ...300 bar / ...4350 psi
10	=	nominal size 10
N	=	NBR (nitril-butadien-rubber / BUNA) seals **(standard)**
V	=	FKM (fluorocarbon rubber / VITON) seals (special seals on request)
1 ... 9	=	technical design no. (omit by ordering)
...	=	voltage e.g. 24 (24 V)
D	=	current DC

(blank)	=	DIN EN 175301-803 connection	3-pole 2 P+E **(standard)**	(IP 65)	with mating plug
T	=	DIN EN 175301-803 connection	3-pole 2 P+E, with protection diode	(IP 65)	with mating plug
M100	=	DIN EN 175301-803 connection	3-pole 2 P+E	(IP 65)	mating plug not supplied
J	=	Junior Timer plug connection	2-pole radial	(IP 65)	mating plug not supplied
JT	=	Junior Timer plug connection	2-pole radial, with protection diode	(IP 65)	mating plug not supplied
I	=	Junior Timer plug connection	2-pole axial	(IP 65)	mating plug not supplied
IT	=	Junior Timer plug connection	2-pole axial, with protection diode	(IP 65)	mating plug not supplied
D	=	Deutsch plug connection DT04-2P	2-pole 45°	(IP 67/69K)	mating plug not supplied
DT	=	Deutsch plug connection DT04-2P	2-pole 45°, with protection diode	(IP 67/69K)	mating plug not supplied

other plug-variants, please consult BUCHER.

IMPORTANT!
Not every combination of voltage values, current type and plug connections vailable.

Related data sheets

Reference	Description
400-P-040011	form tools
400-P-060111	cavity DC
400-P-120110	solenoid coil D36
400-P-740101	threaded port body DC-12

info.ch@bucherhydraulics.com **www.bucherhydraulics.com**

© 2026 by Bucher Hydraulics AG Frutigen, 3714 Frutigen, Switzerland

All rights reserved.
Data is provided for the purpose of product description only, and must not be construed as warranted characteristics in the legal sense. The information does not relieve users from the duty of conducting their own evaluations and tests. Because the products are subject to continual improvement, we reserve the right to amend the product specifications contained in this catalogue.

BUCHER hydraulics

WWW.SUMY.IR

Pressure valve
Relief function

Q_{max} = 350 l/min, p_{max} = 350 bar
Pilot operated, spool type, proportional solenoid with emergency override
Type series: DVPSA-3BG-_-16-...

- Screw-in cartridge valve for cavity EB
- All external parts with zinc-nickel plating according to DIN EN ISO 19598
- Installation in threaded port body type GEBAA
- Inverse-proportional design
- Seated pilot stage
- Nominal pressure when solenoid de-energized (fail-safe function)
- With integral manual pressure setting
- The slip-on coil can be rotated, and it can be replaced without opening the hydraulic envelope
- High pressure wet-armature solenoids
- Various plug-connector systems and voltages are available

Symbol

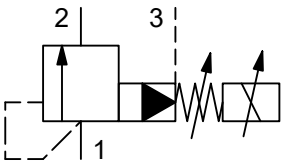

Description

The inverse-proportional pressure relief valves, series DVPS_3BG... are size 16, two stage screw-in valves with an M42×2 mounting thread. They consist of a spool-type main stage and a leak-free, poppet-type pilot stage with a falling pressure/current characteristic. The relief pressure is dependent on the electrical control current and can be continuously varied. When the solenoid is de-energized (initial position), the relief pressure is the nominal pressure of the applicable spring range (fail-safe function). Any pressure at port 3 is additive to the valve setting at the main port 1, therefore port 3 should preferably be connected directly to tank. In control mode, the relief pressure is inversely proportional to the change in the required value (amplifier output current). In order to obtain precise pressure settings over the whole of the required pressure range (optimum resolution), the pressure relief valves are available in five spring ranges. If a proportional solenoid is faulty, for example, the integral manual pressure setting enables the required pressure to be set mechanically. All external parts of the screw-in valves are zinc-nickel plated and are thus suitable for use in

WWW.SUMY.IR

the harshest operating environments. The slip-on coils can be replaced without opening the hydraulic envelope and can be positioned at any angle through 360°. For self-assembly, please refer to the section related data sheets.

Technical data

General characteristics	Description, value, unit
Function group	pressure valve
Function	relief function
Design	screw-in cartridge valve
Controls	proportional solenoid with emergency override
Characteristic	pilot operated, spool type
Construction size	NG 16
Thread size	M42×2
Mounting attitude	unrestricted (preferably vertical, coil down)
Weight	1.25 kg
Cavity acc. ISO	fits into ISO 7789: 42-06-0-07
Cavity acc. factory standard	EB
Tightening torque steel	200 Nm
Tightening torque aluminium	200 Nm
Tightening torque tolerance	± 10 %
Minimum ambient temperature	- 30 °C
Maximum ambient temperature	+ 50 °C
Surface protection	all external parts with zinc-nickel plating according to DIN EN ISO 19598
Sealing material	see ordering code
Seal kit order number	NBR: main stage: DS-358-N / FKM: DS-358-V / two stage: DS-355-N / FKM: DS-355-V

WWW.SUMY.IR

Hydraulic characteristics	Description, value, unit
Maximum operating pressure	350 bar
Restriction of the operating pressure	no pressure [1]) – (pressure resistance 250 bar)
Maximum flow rate	350 l/min
Flow direction	see symbol
Hydraulic fluid	HL and HLP mineral oil according to DIN 51 524; other fluids on request!
Minimum fluid temperature	- 30 °C
Maximum fluid temperature	+ 70 °C
Viscosity range	15 ... 380 mm^2/s (cSt)
Recommended viscosity range	20 ... 130 mm^2/s (cSt)
Minimum fluid cleanliness (cleanlineless class according to ISO 4406:1999)	class 18/16/13
Pilot-oil consumption	0.15 ... 0.4 l/min l/min
Nominal pressure range	nominal pressure range 040: ...40 bar nominal pressure range 100: ...100 bar nominal pressure range 160: ...160 bar nominal pressure range 250: ...250 bar nominal pressure range 350: ...350 bar

NOTE!
[1]) Please note that any tank or return-line pressures acting at port 3 are additive to the pressure setting at port 1.

Electric characteristics	Description, value, unit
Actuator type	solenoid coil
Solenoid coils type	D36
Supply voltage DC	12/24 V DC
Control current	12 V = 0...1400 mA / 24 V = 0...760 mA
Nominal power consumption	27 W
Relative duty cycle	100 %
Coil resistance R	cold value at 20° = 12 V = 5.8 Ω / 24 V = 21 Ω max. warm value = 12 V = 8.6 Ω / 24 V = 32 Ω
Recommended PWM frequency	200 Hz
Response sensitivity with PWM	< 1 % I_N
Reproducibility with PWM	< 2 % p_N
Hysterese with PWM	2...4 % I_N
Reversal error with PWM	2...4 % I_N
Electrical connection coil	DIN EN 175301-803, 3-pole 2 P+E (IP 65)
Protection class solenoid coil to ISO 20 653 / EN 60 529	IP 65 / IP 67 / IP 69K, see “Ordering code” (with appropriate mating connector and proper fitting and sealing)

Performance graphs

measured with oil viscosity 33.0 mm²/s (cSt)

p = f (I) Pressure adjustment

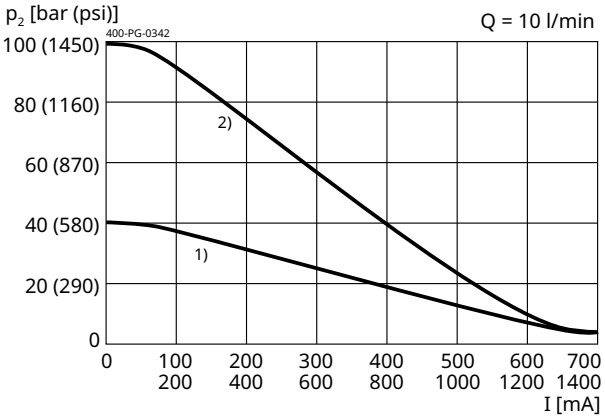

1) = p_N 40 bar (580 psi)
2) = p_N 100 bar (1450 psi)

p = f (I) Pressure adjustment

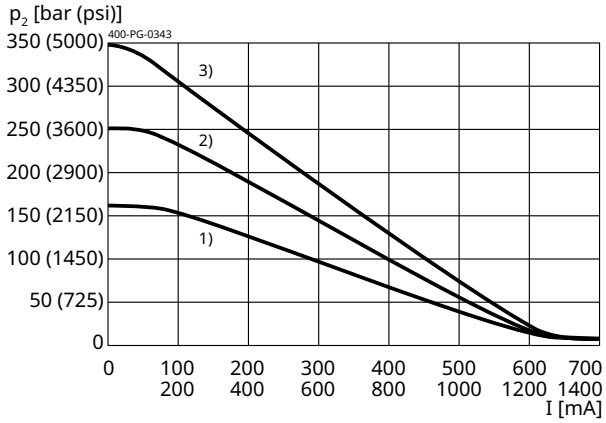

1) = pN 160 bar (2300 psi)
2) = pN 250 bar (3600 psi)
3) = pN 350 bar (5000 psi)

p = f (Q) Pressure-flow rate

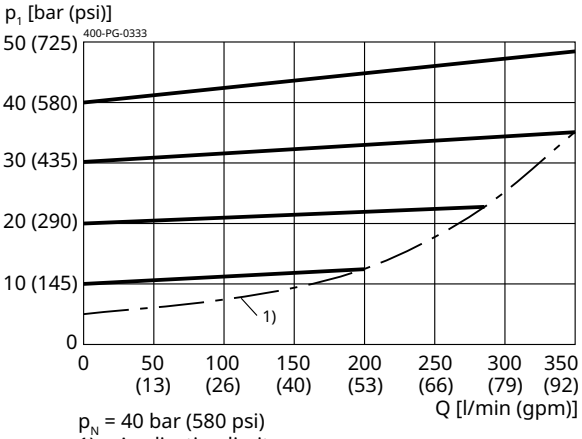

p_N = 40 bar (580 psi)
1) = Application limit
(p min. / I = max. mA)

p = f (Q) Pressure-flow rate

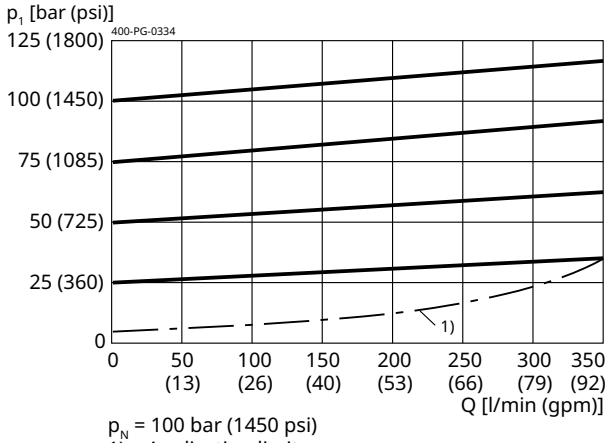

p_N = 100 bar (1450 psi)
1) = Application limit
(p min. / I = max. mA)

p = f (Q) Pressure-flow rate

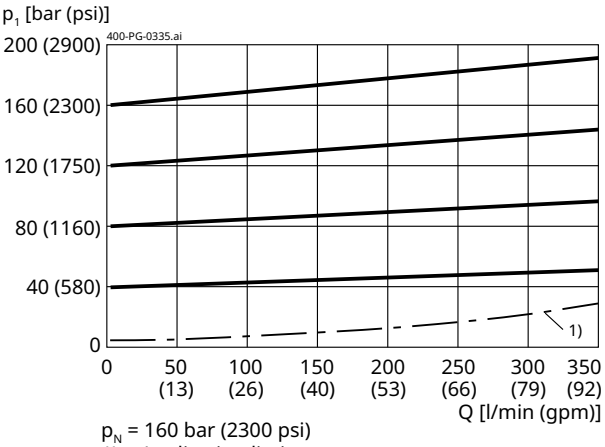

p_N = 160 bar (2300 psi)
1) = Application limit
(p min. / I = max. mA)

p = f (Q) Pressure-flow rate

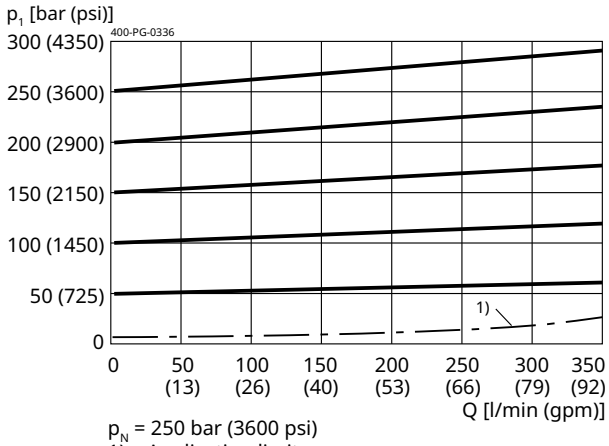

p_N = 250 bar (3600 psi)
1) = Application limit
(p min. / I = max. mA)

p = f (Q) Pressure-flow rate

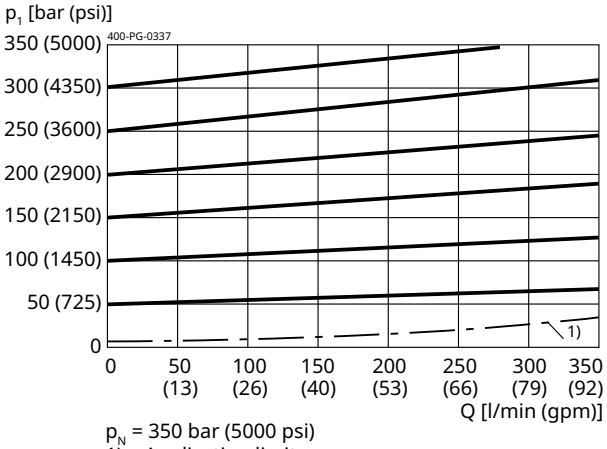

p_N = 350 bar (5000 psi)
1) = Application limit
(p min. / I = max. mA)

QL = f (Q;p) Leakage flow rate

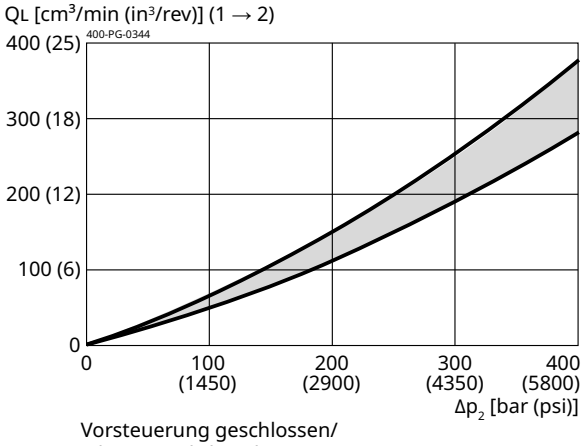

Vorsteuerung geschlossen/
Pilot control closed

Installation

Beispiel für die Masseinheit:
Example for the dimensional units:

0.79 = 0.79 mm millimeter
(.031) = 0.031'' inch

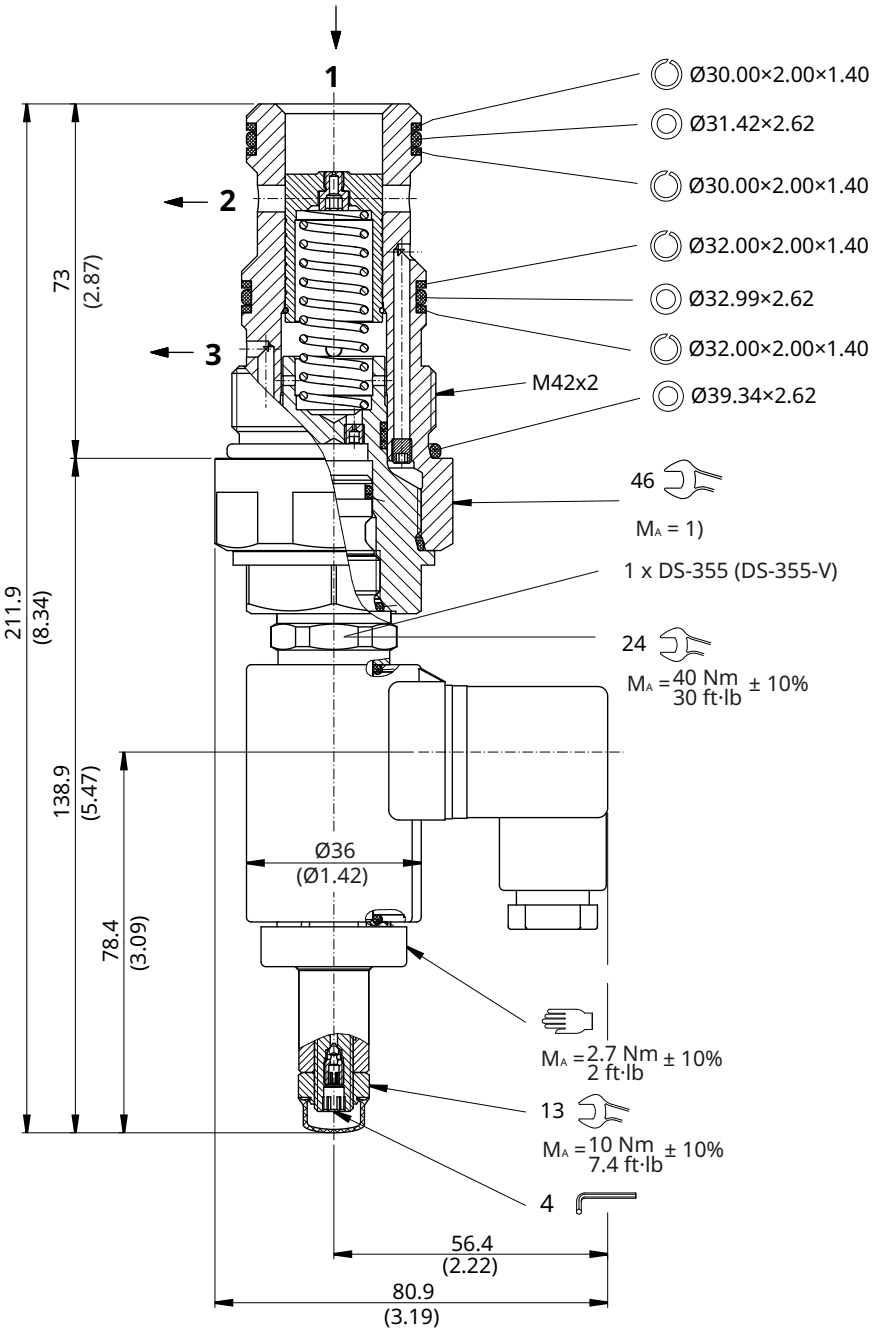

NOTE!
1) When fitting the screw-in cartridge valve, use the specified tightening torque. The value can be found in the chapter "Technical data".

IMPORTANT!
To achieve the screw-in valve's maximum performance rating, fit the solenoid coil as shown (with the plug pins nearest the valve body). The valve must be installed in a steel body.

NOTE!
The seals are not available individually. The seal kit order number can be found in the chapter "Technical data".

ATTENTION!
Only qualified personnel with mechanical skills may carry out any maintenance work. Generally, the only work that should ever be undertaken is to check, and possibly replace, the seals. When changing seals, oil or grease the new seals thoroughly before fitting them.

Emergency pressure setting

Optionally, the proportional pressure screw-in cartridge valves can be supplied with an integral manual emergency pressure setting. If a proportional solenoid is faulty, for example, this manual pressure setting enables the required pressure to be set mechanically up to max. 60% of the nominal pressure. The manual pressure setting is not designed for adjusting the pressure in a dynamic control mode. The following steps must be observed.

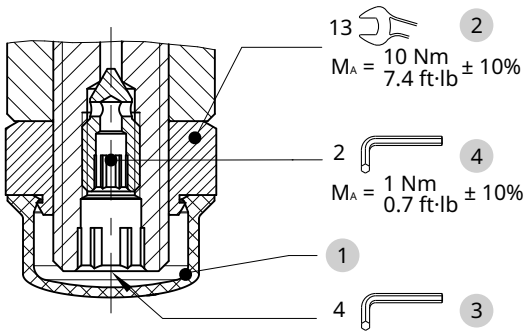

1. Remove the protective cap 1
2. Loosen the lock nut 2
3. Screw-in (turn to right) the adjusting spindle 3 until the required pressure is set.
4. Tighten the lock nut 2 to the specified torque.
5. Fit the protective cap 1

NOTE!
Any changes to the emergency pressure setting have a direct impact on the factory setting.

Reset to factory settings

To reset the proportional pressure-relief cartridges to their initial position (the factory setting), a constant flow rate and a pressure gauge that measures the pressure in the input port are needed. The pressure setting must not exceed the nominal pressure of the spring range in use. The following steps must be observed.

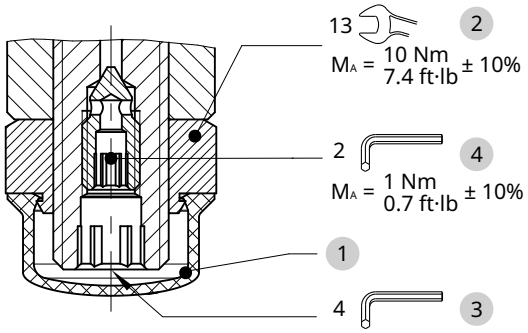

1. Ensure that the solenoid coil is de-energized
2. Remove the protective cap 1
3. Loosen the lock nut 2
4. Unscrew the adjusting spindle 3 to its end-stop
5. Screw-in the adjusting spindle 3 until the pressure on the gauge reaches the nominal pressure (pN) of the spring range in use
6. Tighten the lock nut 2 to the specified torque
7. Fit the protective cap 1

Air-bleeding

The integrated air-bleed screw allows the proportional pressure valves to be vented if necessary. If the screw-in valve is mounted as preferred (solenoid-coil hanging), it is self-venting. To vent the valve manually, follow the steps below.

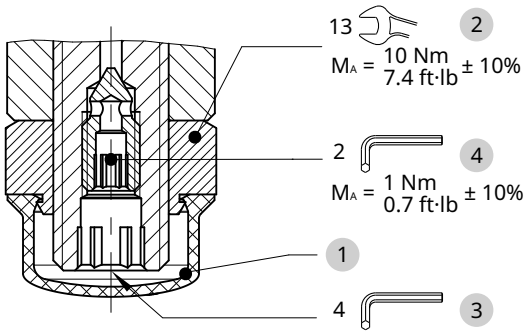

1. Remove the protective cap 1
2. Loosen the air-bleed screw 4 approx. 2 turns
3. Switch the valve ON/OFF several times until no more air bubbles escape
4. Tighten the air-bleed screw 4 to the specified torque
5. Fit the protective cap 1

Ordering code

Ex. DV P S A - 3 B G - 040 - 16 _ - 1 24 D _

DV	=	pilot operated pressure relief cartridge
P	=	pilot operated
S	=	electrically operated, D36, proportional
A ...Q	=	standard model according to valid data sheet
Z ... R	=	special model (on request)
3	=	pressure relief (with external control oil outlet)
B	=	cavity type EB
G	=	proportional solenoid, inverse type (pulling)
040	=	pressure range ... 40 bar
100	=	pressure range ... 100 bar
160	=	pressure range ... 160 bar
250	=	pressure range ... 250 bar
350	=	pressure range ... 350 bar
16	=	nominal size 16
(blank)	=	NBR (nitril-butadien-rubber / BUNA) seals **(standard)**
V	=	FKM (fluorocarbon rubber / VITON) seals (special seals on request)
1...9	=	technical design no. (omit by ordering)
...	=	voltage e.g. 24 (24 V)
D	=	current DC

(blank)	=	DIN EN 175301-803 connection	3-pole 2 P+E **(standard)**	(IP 65)	with mating plug
T	=	DIN EN 175301-803 connection	3-pole 2 P+E, with protection diode	(IP 65)	with mating plug
M100	=	DIN EN 175301-803 connection	3-pole 2 P+E	(IP 65)	mating plug not supplied
J	=	Junior Timer plug connection	2-pole radial	(IP 65)	mating plug not supplied
JT	=	Junior Timer plug connection	2-pole radial, with protection diode	(IP 65)	mating plug not supplied
I	=	Junior Timer plug connection	2-pole axial	(IP 65)	mating plug not supplied
IT	=	Junior Timer plug connection	2-pole axial, with protection diode	(IP 65)	mating plug not supplied
D	=	Deutsch plug connection DT04-2P	2-pole 45°	(IP 67/69K)	mating plug not supplied
DT	=	Deutsch plug connection DT04-2P	2-pole 45°, with protection diode	(IP 67/69K)	mating plug not supplied

other plug-variants, please consult BUCHER.

IMPORTANT!
Not every combination of voltage values, current type and plug connections vailable.

Related data sheets

Reference	Description
400-P-040011	form tools
400-P-080111	cavity EB
400-P-120110	solenoid coil D36
400-P-750115	threaded port body GEBAA

info.ch@bucherhydraulics.com **www.bucherhydraulics.com**

© 2026 by Bucher Hydraulics AG Frutigen, 3714 Frutigen, Switzerland

All rights reserved.
Data is provided for the purpose of product description only, and must not be construed as warranted characteristics in the legal sense. The information does not relieve users from the duty of conducting their own evaluations and tests. Because the products are subject to continual improvement, we reserve the right to amend the product specifications contained in this catalogue.

BUCHER hydraulics

WWW.SUMY.IR

Pressure valve
Relief function

Q_{max} = 120 l/min, p_{max} = 315 bar
Pilot operated, spool type, proportional solenoid
Type series: DVPSA-3D-_-10-...

- Screw-in cartridge valve for cavity DD
- All external parts with zinc-nickel plating according to DIN EN ISO 19598
- Installation in threaded port body type DD-12
- Pilot oil drained externally to port Z
- Very stable operation
- Seated pilot stage
- High pressure wet-armature solenoids
- Large variety of plug connections
- The slip-on coil can be rotated, and it can be replaced without opening the hydraulic envelope

Symbol

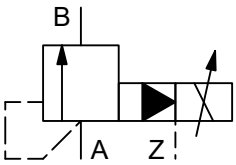

Description

Series DVPSA-3D... are two-stage, spool-type proportional pressure-relief valves. They limit the inlet pressure in A to a value that is proportional to the solenoid current. All external parts are zinc plated and chromited (Cr VI-free) and are thus suitable for use in the harshest operating environments. The core tube / slip-on coil design allows coils to be changed without opening the hydraulic envelope, even when the valve is under pressure. Coils can be secured at any angle through 360° and can be supplied with the most common electrical connectors (see ordering code). For customers who manufacture their own manifold blocks, we offer form-tool sets for sale or hire. Use the DDY-12 body with threaded ports (G 1/2") for line-mounting applications.

Technical data

General characteristics	Description, value, unit
Function group	pressure valve
Function	relief function
Design	screw-in cartridge valve
Controls	proportional solenoid
Characteristic	pilot operated, spool type
Construction size	NG 10
Thread size	M24×1,5
Mounting attitude	unrestricted (preferably vertical, coil down)
Weight	0.50 kg
Cavity acc. factory standard	DD
Tightening torque steel	65 Nm
Tightening torque aluminium	50 Nm
Tightening torque tolerance	± 10 %
Minimum ambient temperature	- 30 °C
Maximum ambient temperature	+ 50 °C
Surface protection	all external parts with zinc-nickel plating according to DIN EN ISO 19598
Seal kit order number	NBR: DS-339-N / FKM: DS-339-V

Hydraulic characteristics	Description, value, unit
Maximum operating pressure	315 bar
Maximum back pressure, return pressure, tank pressure	port Z: no back-pressure, 0 bar
Maximum flow rate	120 l/min
Flow direction	see symbol
Hydraulic fluid	HL and HLP mineral oil according to DIN 51 524; other fluids on request!
Minimum fluid temperature	- 30 °C
Maximum fluid temperature	+ 70 °C
Viscosity range	10 ... 650 mm^2/s (cSt)
Recommended viscosity range	15 ... 250 mm^2/s (cSt)
Minimum fluid cleanliness (cleanlineless class according to ISO 4406:1999)	class 18/16/13
Pressure adjustment range	pressure range 060 = ... 60 bar pressure range 100 = ... 100 bar pressure range 160 = ... 160 bar pressure range 250 = ... 250 bar pressure range 315 = ... 315 bar

WWW.SUMY.IR

Electric characteristics	Description, value, unit
Actuator type	solenoid coil
Solenoid coils type	D36
Supply voltage DC	12/24 V DC
Control current	12 V = 0...1400 mA / 24 V = 0...750 mA
Nominal power consumption	27 W
Relative duty cycle	100 %
Coil resistance R	12 VDC = 5,8 / 8,6 / 24 VDC = 21 / 32 Ω
Recommended PWM frequency	200 Hz
Response sensitivity with PWM	⩽ 1 % I_N
Hysterese with PWM	2...4 % I_N
Reversal error with PWM	2...5 % I_N
Electrical connection coil	ISO 4400 / DIN 43 650 connection, 3-pole (IP 65)
Protection class solenoid coil to ISO 20 653 / EN 60 529	IP 65 / IP 67 / IP 69K, see “Ordering code” (with appropriate mating connector and proper fitting and sealing)

Performance graphs

measured with oil viscosity 33.0 mm²/s (cSt)

p = f (I) Pressure adjustment

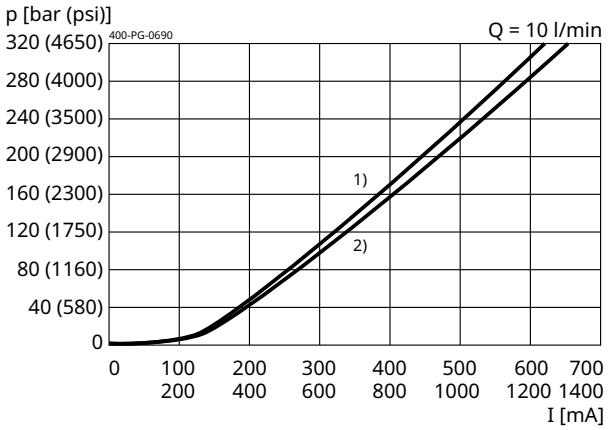

1) 12 VDC
2) 24 VDC
p_N 315 bar (4500 psi)

p = f (Q) Pressure-flow rate

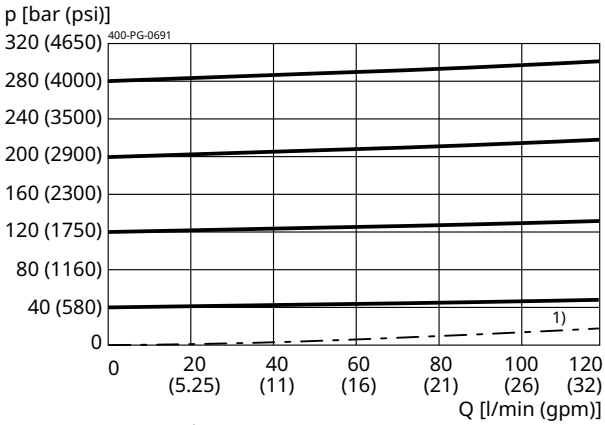

p_N = 315 bar (4500 psi)
1) Einsatzgrenze / Application limit
(p min. / I = 0 mA)

WWW.SUMY.IR

p = f (I) Pressure adjustment

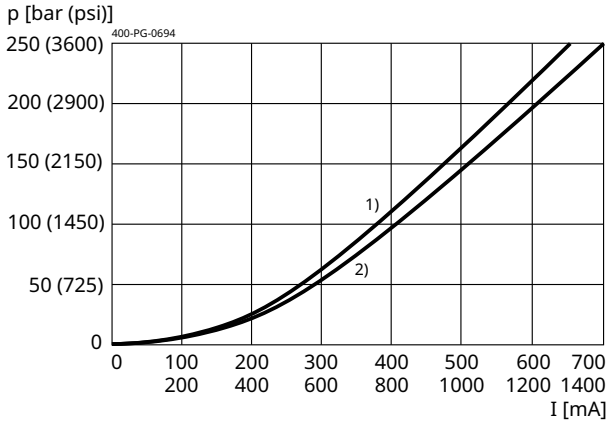

1) 12 VDC
2) 24 VDC
p_N 250 bar (3600 psi)

p = f (Q) Pressure-flow rate

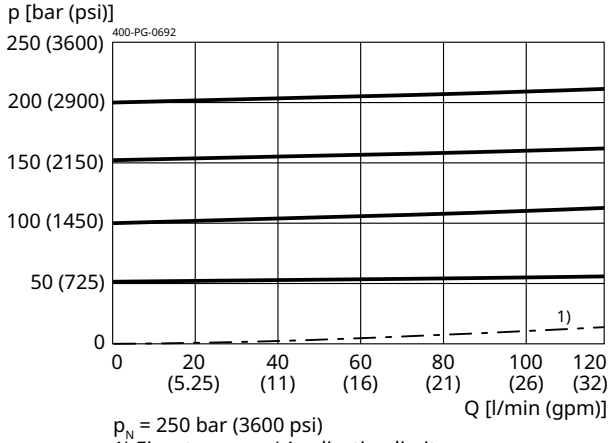

p_N = 250 bar (3600 psi)
1) Einsatzgrenze / Application limit
(p min. / I = 0 mA)

p = f (I) Pressure adjustment

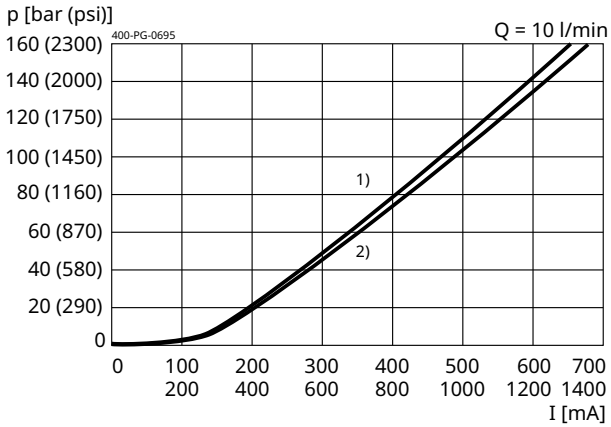

1) 12 VDC
2) 24 VDC
p_N 160 bar (2300 psi)

p = f (Q) Pressure-flow rate

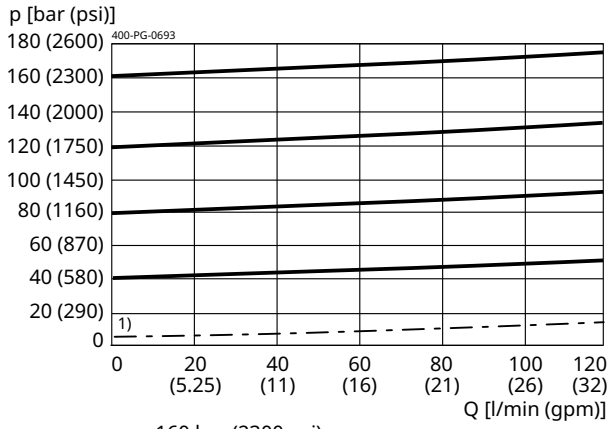

p_N = 160 bar (2300 psi)
1) Einsatzgrenze / Application limit
(p min. / I = 0 mA)

p = f (I) Pressure adjustment

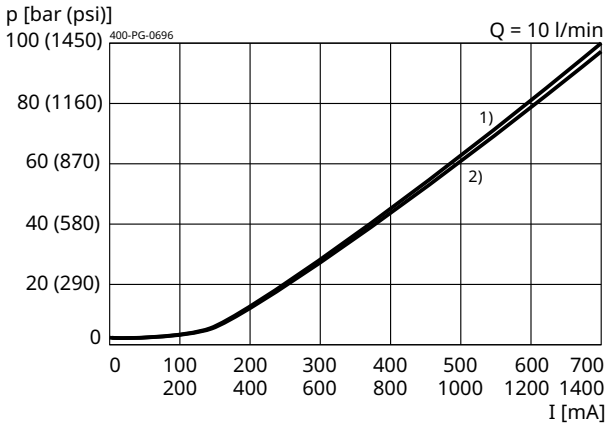

1) 12 VDC
2) 24 VDC
p_N 100 bar (1450 psi)

p = f (Q) Pressure-flow rate

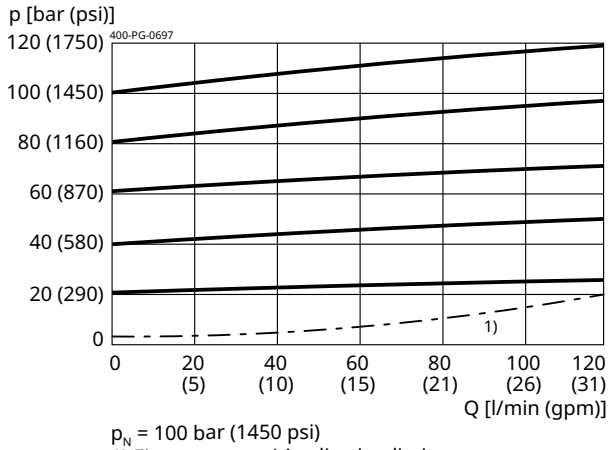

p_N = 100 bar (1450 psi)
1) Einsatzgrenze / Application limit
(p min. / I = 0 mA)

WWW.SUMY.IR

p = f (I) Pressure adjustment

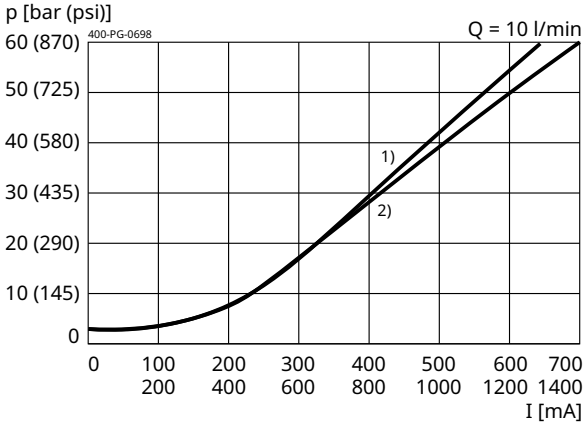

1) 12 VDC
2) 24 VDC
p_N 060 bar (870 psi)

p = f (Q) Pressure-flow rate

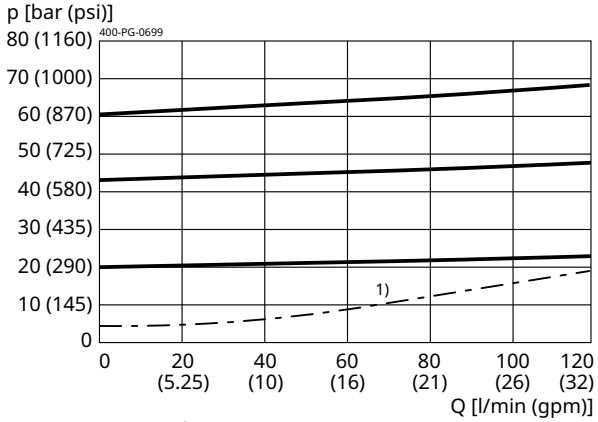

p_N = 060 bar (870 psi)
1) Einsatzgrenze / Application limit
(p min. / I = 0 mA)

Installation

Beispiel für die Masseinheit:
Example for the dimensional units:

0.79 = 0.79 mm millimeter
(.031) = 0.031'' inch

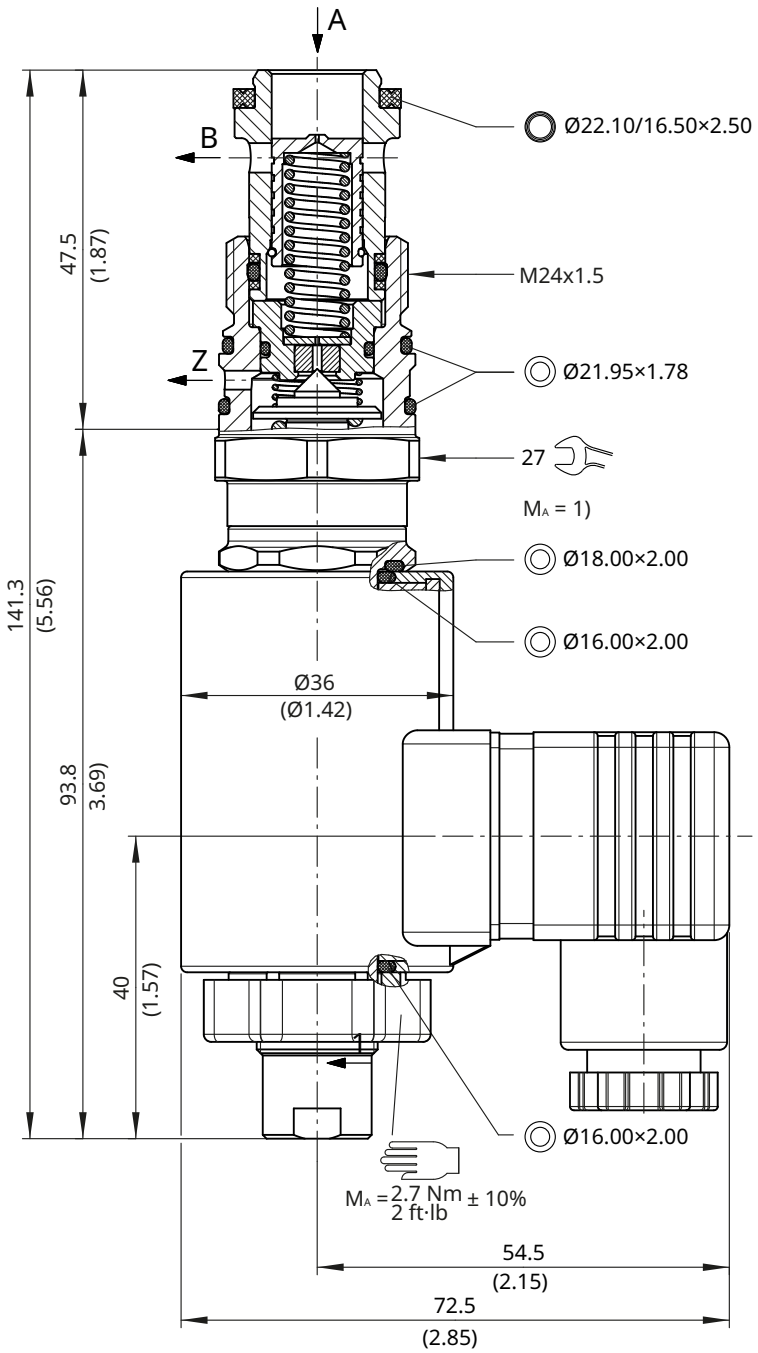

NOTE!
1) When fitting the screw-in cartridge valve, use the specified tightening torque. The value can be found in the chapter "Technical data".

IMPORTANT!
To achieve the screw-in valve's maximum performance rating, fit the solenoid coil as shown (with the plug pins nearest the knurled nut). The valve must be installed in a steel body.

NOTE!
The seals are not available individually. The seal kit order number can be found in the chapter "Technical data".

ATTENTION!
Only qualified personnel with mechanical skills may carry out any maintenance work. Generally, the only work that should ever be undertaken is to check, and possibly replace, the seals. When changing seals, oil or grease the new seals thoroughly before fitting them.

Ordering code

Ex. DV P S A - 3 D - 060 - 10 _ - 2 24 D _

DV	=	pilot operated pressure relief cartridge
P	=	pilot operated
S	=	electrically operated, D36, proportional
A ...Q	=	standard model according to valid data sheet
Z ... R	=	special model (on request)
3	=	pressure relief (with external control oil outlet)
D	=	cavity type DD
060	=	pressure range ... 60 bar
100	=	pressure range ... 100 bar
160	=	pressure range ... 160 bar
250	=	pressure range ... 250 bar
315	=	pressure range ... 315 bar
10	=	nominal size 10
(ohne)	=	NBR (nitril-butadien-rubber / BUNA) seals **(standard)**
V	=	FKM (fluorocarbon rubber / VITON) seals (special seals on request)
1...9	=	technical design no. (omit by ordering)
...	=	voltage e.g. 24 (24 V)
D	=	current DC

(blank)	=	DIN EN 175301-803 connection	3-pole 2 P+E **(standard)**	(IP 65)	with mating plug
T	=	DIN EN 175301-803 connection	3-pole 2 P+E, with protection diode	(IP 65)	with mating plug
M100	=	DIN EN 175301-803 connection	3-pole 2 P+E	(IP 65)	mating plug not supplied
J	=	Junior Timer plug connection	2-pole radial	(IP 65)	mating plug not supplied
JT	=	Junior Timer plug connection	2-pole radial, with protection diode	(IP 65)	mating plug not supplied
I	=	Junior Timer plug connection	2-pole axial	(IP 65)	mating plug not supplied
IT	=	Junior Timer plug connection	2-pole axial, with protection diode	(IP 65)	mating plug not supplied
D	=	Deutsch plug connection DT04-2P	2-pole 45°	(IP 67/69K)	mating plug not supplied
DT	=	Deutsch plug connection DT04-2P	2-pole 45°, with protection diode	(IP 67/69K)	mating plug not supplied
		other plug-variants, please consult BUCHER.			

IMPORTANT!
Not every combination of voltage values, current type and plug connections vailable.

Related data sheets

Reference	Description
400-P-040011	form tools
400-P-060121	cavity DD
400-P-120110	solenoid coil D36
400-P-740112	threaded port body DDY-12

info.ch@bucherhydraulics.com **www.bucherhydraulics.com**

© 2026 by Bucher Hydraulics AG Frutigen, 3714 Frutigen, Switzerland

All rights reserved.
Data is provided for the purpose of product description only, and must not be construed as warranted characteristics in the legal sense. The information does not relieve users from the duty of conducting their own evaluations and tests. Because the products are subject to continual improvement, we reserve the right to amend the product specifications contained in this catalogue.

BUCHER hydraulics

WWW.SUMY.IR

Pressure valve
Relief function

Q_{max} = 350 l/min, p_{max} = 350 bar
Pilot operated, spool type, proportional solenoid
Type series: DVPSB-3B-_-16-...

- Screw-in cartridge valve for cavity EB
- All external parts with zinc-nickel plating according to DIN EN ISO 19598
- Installation in threaded port body type GEBAA
- External pilot-oil drain
- Very stable operation
- Seated pilot stage
- Various plug-connector systems and voltages are available

Symbol

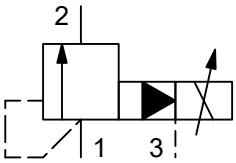

Description

Series DVPS_-3B... are two-stage, spool-type proportional pressure-relief valves. They limit the inlet pressure in port 1 to a value that is proportional to the solenoid current. All external parts are chromited (Cr VI-free) and are thus suitable for use in the harshest operating environments. The core tube / slip-on coil design allows coils to be changed without opening the hydraulic envelope, even when the valve is under pressure. Coils can be secured at any angle through 360° and can be supplied with the most common electrical connectors (see ordering code). For customers who manufacture their own manifold blocks, we offer form-tool sets for sale or hire. Use the GEBAA body with threaded ports (G 1") for line-mounting applications.

Technical data

General characteristics	Description, value, unit
Function group	pressure valve
Function	relief function
Design	screw-in cartridge valve
Controls	proportional solenoid
Characteristic	pilot operated, spool type
Construction size	NG 16
Thread size	M42×2
Mounting attitude	unrestricted (preferably vertical, coil down)
Weight	1.25 kg
Cavity acc. ISO	fits into ISO 7789: 42-06-0-07
Cavity acc. factory standard	EB
Minimum ambient temperature	- 30 °C
Maximum ambient temperature	+ 50 °C
Surface protection	all external parts with zinc-nickel plating according to DIN EN ISO 19598
Sealing material	see ordering code
Seal kit order number	main stage: NBR: DS-358-N / FKM: DS-358-V / pilot valve: NBR: DS-355-N / FKM: DS-355-V

Hydraulic characteristics	Description, value, unit
Maximum operating pressure	350 bar
Restriction of the operating pressure	port 3: no pack-pressure [1])
Maximum flow rate	350 l/min
Flow direction	see symbol
Hydraulic fluid	HL and HLP mineral oil according to DIN 51 524; other fluids on request!
Minimum fluid temperature	- 30 °C
Maximum fluid temperature	+ 70 °C
Viscosity range	15 ... 380 mm^2/s (cSt)
Recommended viscosity range	20 ... 130 mm^2/s (cSt)
Minimum fluid cleanliness (cleanlineless class according to ISO 4406:1999)	class 18/16/13
Pressure adjustment range	pressure range ...40 bar pressure range ...100 bar pressure range ...160 bar pressure range ...250 bar pressure range ...350 bar

NOTE!
[1]) Please note that any tank or return-line pressures acting at port 3 are additive to the pressure setting at port 1.

WWW.SUMY.IR

Electric characteristics	Description, value, unit
Actuator type	solenoid coil
Solenoid coils type	D36
Supply voltage DC	12/24 V DC
Control current	12 V = 0...1400 mA / 24 V = 0...750 mA
Nominal power consumption	27 W
Relative duty cycle	100 %
Coil resistance R	12 VDC = 5,8 / 8,6 / 24 VDC = 21 / 32 Ω
Recommended PWM frequency	200 Hz
Response sensitivity with PWM	< 1 % I_N
Hysterese with PWM	2...4 % I_N
Reversal error with PWM	2...5 % I_N
Electrical connection coil	ISO 4400 / DIN 43 650 connection, 3-pole (IP 65)
Protection class solenoid coil to ISO 20 653 / EN 60 529	IP 65 / IP 67 / IP 69K, see “Ordering code” (with appropriate mating connector and proper fitting and sealing)

Performance graphs

measured with oil viscosity 33.0 mm²/s (cSt)

p = f (I) Pressure adjustment

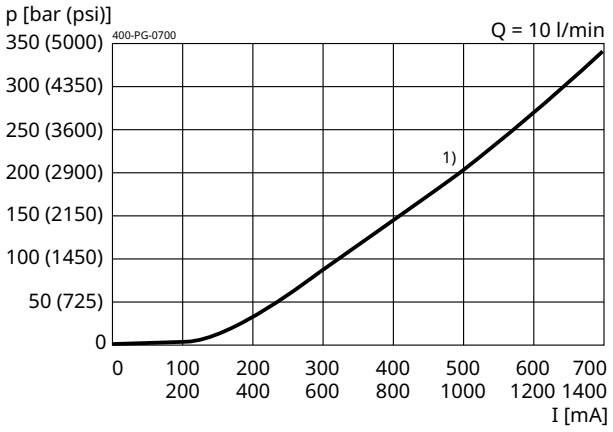

1) 12/24 VDC
p_N 350 bar (5000 psi)

p = f (Q) Pressure-flow rate

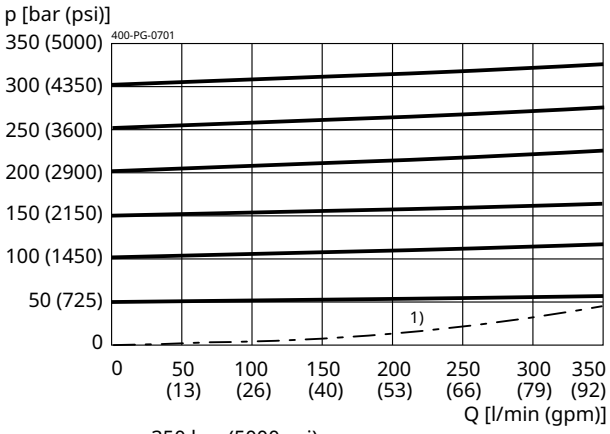

p_N = 350 bar (5000 psi)
1) Einsatzgrenze / Application limit
(p min. / I = 0 mA)

p = f (I) Pressure adjustment

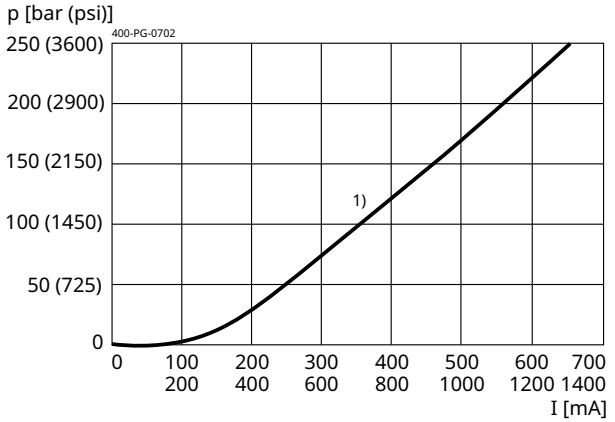

1) 12/24 VDC
p_N 250 bar (3600 psi)

p = f (Q) Pressure-flow rate

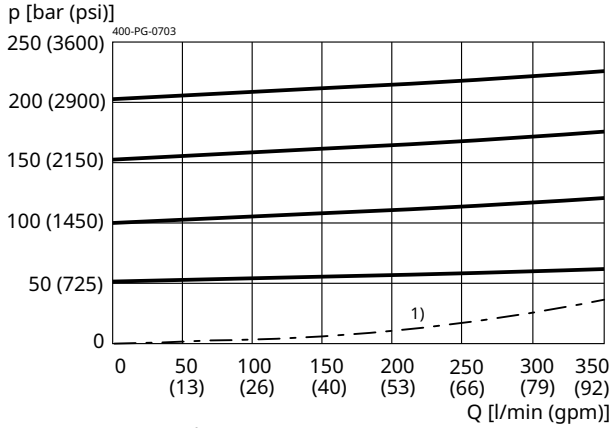

p_N = 250 bar (3600 psi)
1) Einsatzgrenze / Application limit
(p min. / I = 0 mA)

p = f (I) Pressure adjustment

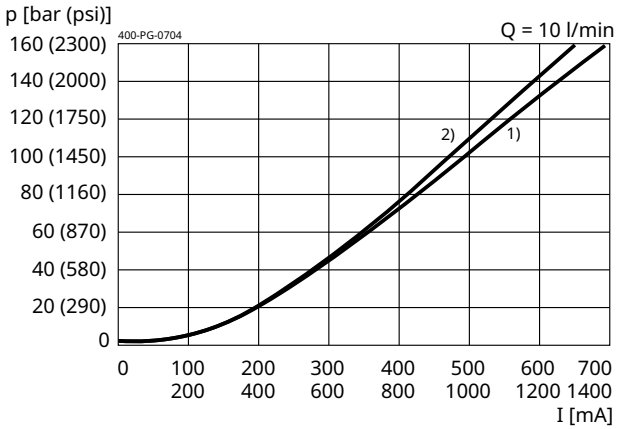

1) 12 VDC
2) 24 VDC
p_N 160 bar (2300 psi)

p = f (Q) Pressure-flow rate

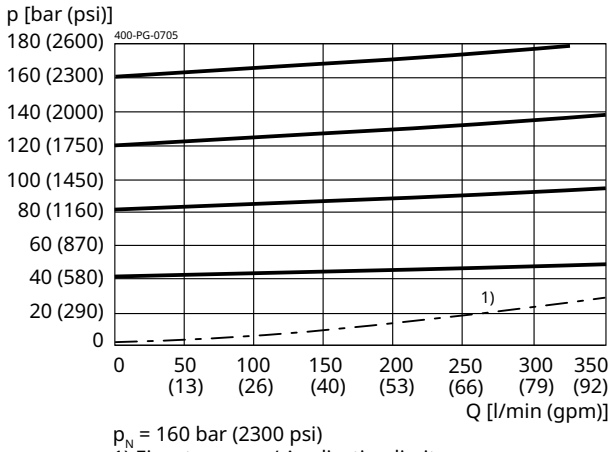

p_N = 160 bar (2300 psi)
1) Einsatzgrenze / Application limit
(p min. / I = 0 mA)

p = f (I) Pressure adjustment

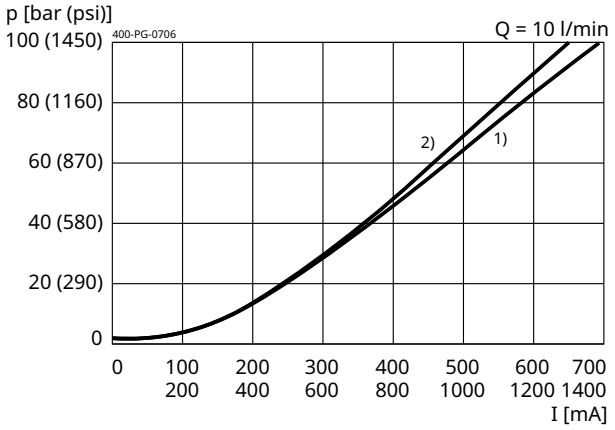

1) 12 VDC
2) 24 VDC
p_N 100 bar (1450 psi)

p = f (Q) Pressure-flow rate

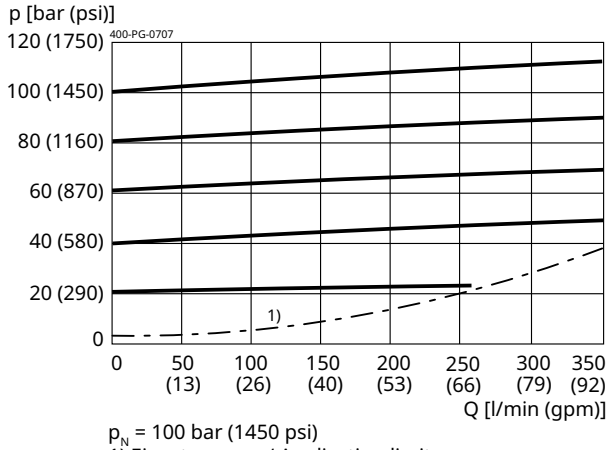

p_N = 100 bar (1450 psi)
1) Einsatzgrenze / Application limit
(p min. / I = 0 mA)

WWW.SUMY.IR

p = f (I) Pressure adjustment

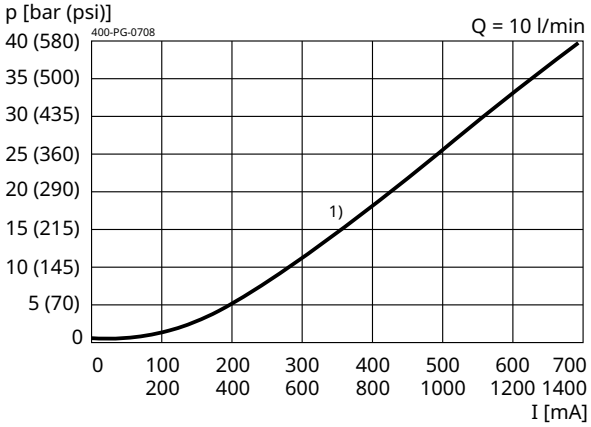

1) 12, 24 VDC
p_N 40 bar (580 psi)

p = f (Q) Pressure-flow rate

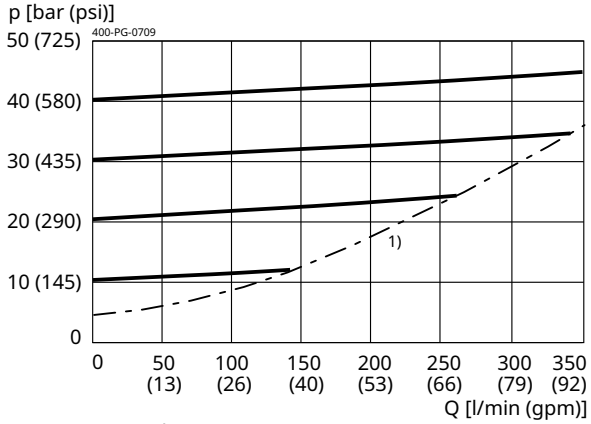

p_N = 40 bar (580 psi)
1) Einsatzgrenze / Application limit
(p min. / I = 0 mA)

QL = f (I;Δp) Leakage flow rate

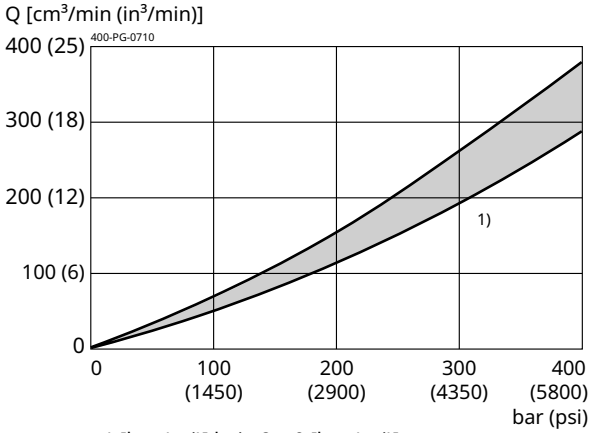

p1 [bar (psi)] bei p2 = 0 [bar (psi)]
Vorsteuerung geschlossen / pilot stage closed
1) = 1 → 2

Installation

Beispiel für die Masseinheit:
Example for the dimensional units:

0.79 = 0.79 mm millimeter
(.031) = 0.031" inch

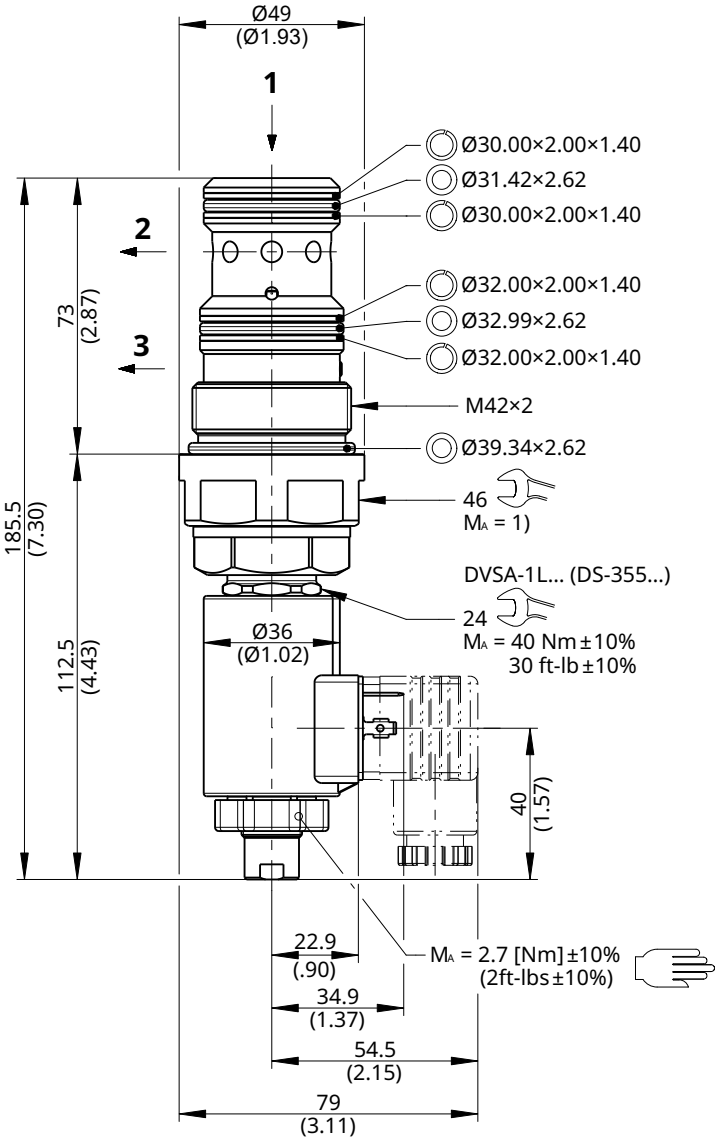

NOTE!
To achieve the screw-in valve's maximum performance rating, fit the solenoid coil as shown (with the plug pins nearest the valve body).

NOTE!
1) When fitting the screw-in cartridge valve, use the specified tightening torque. The value can be found in the chapter "Technical data".

ATTENTION!
Only qualified personnel with mechanical skills may carry out any maintenance work. Generally, the only work that should ever be undertaken is to check, and possibly replace, the seals. When changing seals, oil or grease the new seals thoroughly before fitting them.

Ordering code

Ex. D V P S B - 3 B - 040 - 16 _ - 1 - 24 D - _

D	=	pressure-control valve			
V	=	pilot operated			
P	=	proportional			
S	=	electrically operated, D36			
A ... Q	=	standard model according to valid data sheet			
Z ... R	=	special model (on request)			
3	=	pressure relief (with external control oil outlet)			
B	=	cavity type EB			
040	=	pressure range ... 40 bar / ... 580 psi			
100	=	pressure range ...100 bar / ...1450 psi			
160	=	pressure range ...160 bar / ...2300 psi			
250	=	pressure range ...250 bar / ...3600 psi			
350	=	pressure range ...350 bar / ...5000 psi			
16	=	nominal size 16			
(blank)	=	NBR (nitril-butadien-rubber / BUNA) seals **(standard)**			
V	=	FKM (fluorocarbon rubber / VITON) seals (special seals on request)			
1 ... 9	=	technical design no. (omit by ordering)			
...	=	voltage e.g. 24 (24 V)			
D	=	current DC			
(blank)	=	DIN EN 175301-803 connection	3-pole 2 P+E **(standard)**	(IP 65)	with mating plug
T	=	DIN EN 175301-803 connection	3-pole 2 P+E, with protection diode	(IP 65)	with mating plug
M100	=	DIN EN 175301-803 connection	3-pole 2 P+E	(IP 65)	mating plug not supplied
J	=	Junior Timer plug connection	2-pole radial	(IP 65)	mating plug not supplied
JT	=	Junior Timer plug connection	2-pole radial, with protection diode	(IP 65)	mating plug not supplied
I	=	Junior Timer plug connection	2-pole axial	(IP 65)	mating plug not supplied
IT	=	Junior Timer plug connection	2-pole axial, with protection diode	(IP 65)	mating plug not supplied
D	=	Deutsch plug connection DT04-2P	2-pole 45°	(IP 67/69K)	mating plug not supplied
DT	=	Deutsch plug connection DT04-2P	2-pole 45°, with protection diode	(IP 67/69K)	mating plug not supplied
		other plug-variants, please consult BUCHER.			

IMPORTANT!
Not every combination of voltage values, current type and plug connections vailable.

Related data sheets

Reference	Description
400-P-040011	form tools
400-P-080111	cavity EB
400-P-120110	solenoid coil D36
400-P-750115	threaded port body GEBAA

info.ch@bucherhydraulics.com **www.bucherhydraulics.com**

© 2026 by Bucher Hydraulics AG Frutigen, 3714 Frutigen, Switzerland

All rights reserved.
Data is provided for the purpose of product description only, and must not be construed as warranted characteristics in the legal sense. The information does not relieve users from the duty of conducting their own evaluations and tests. Because the products are subject to continual improvement, we reserve the right to amend the product specifications contained in this catalogue.

BUCHER hydraulics

WWW.SUMY.IR

Pressure valve
Relief function

Q_{max} = 100 l/min, p_{max} = 350 bar
pilot operated, spool type, mechanically adjustable
Type series: DVPA-RV-1C-10...

- Screw-in cartridge valve
- For cavity DC
- All external parts with zinc-nickel plating according to DIN EN ISO 19598
- Installation in threaded port body type DC-12
- Seated pilot stage
- Very stable operation
- Sensitive adjustment
- With built-in check valve

Description

These two-stage pressure-relief valves, series DVPA-RV-1C-..., are size 10, screw-in cartridge valves with a seated pilot stage and an M24×1.5 mounting thread. They are designed on the proven sliding-spool principle. The spring chamber is internally drained to the secondary connection. The secondary connection should be preferably drained to the tank without pressure. To obtain a reliable pressure setting over the entire pressure range, the overall pressure range is divided into different pressure levels. These valves are mainly used in certain mobile and industrial applications to limit the system pressure. The pressure is set by means of an adjusting spindle. All external parts of the screw-in valves are zinc-nickel plated and are thus suitable for use in the harshest operating environments. For installation and further information, please refer to the section related data sheets.

Symbol

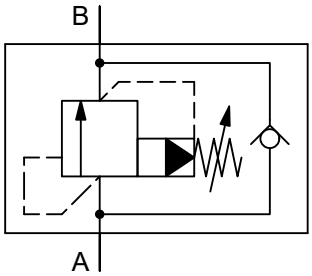

WWW.SUMY.IR

Technical data

General characteristics	Description, value, unit
Function group	Pressure valve
Function	Relief function
Design	Screw-in cartridge valve
Controls	mechanically adjustable
Characteristic	pilot operated, spool type
Construction size	NG 10
Thread size	M24×1,5
Mounting attitude	unrestricted
Weight	0.23 kg
Cavity acc. factory standard	For cavity DC
Tightening torque steel	65 Nm
Tightening torque aluminium	65 Nm
Tightening torque tolerance	± 10 %
Minimum ambient temperature	- 30 °C
Maximum ambient temperature	+ 80 °C
Surface protection	All external parts with zinc-nickel plating according to DIN EN ISO 19598
Sealing material	see ordering code
Seal kit order number	NBR: DS-216-N / FKM: DS-216-V

Hydraulic characteristics	Description, value, unit
Maximum operating pressure	350 bar
Maximum flow rate	100 l/min
Flow direction	see symbol
Hydraulic fluid	HL and HLP mineral oil according to DIN 51 524; other fluids on request!
Minimum fluid temperature	- 30 °C
Maximum fluid temperature	+ 80 °C
Viscosity range	10 ... 650 mm^2/s (cSt)
Recommended viscosity range	15 ... 250 mm^2/s (cSt)
Minimum fluid cleanliness (cleanlineless class according to ISO 4406:1999)	class 20/18/15
Definition of cracking pressure for check valve	Via check valve = A to B ca. 6 bar (look to perfomance graph)
Pressure adjustment range	pressure range L: 1 turn = ca. 13 bar pressure range M: 1 turn = ca. 38 bar pressure range N: 1 turn = ca. 65 bar

ATTENTION!
If there is pressure at the secondary connection, this is added to the set pressure value.

Performance graphs

measured with oil viscosity 33.0 mm²/s (cSt)

Δp = f (Q) Pressure drop-flow rate characteristic

Druckstufe Typ N / Pressure range type N

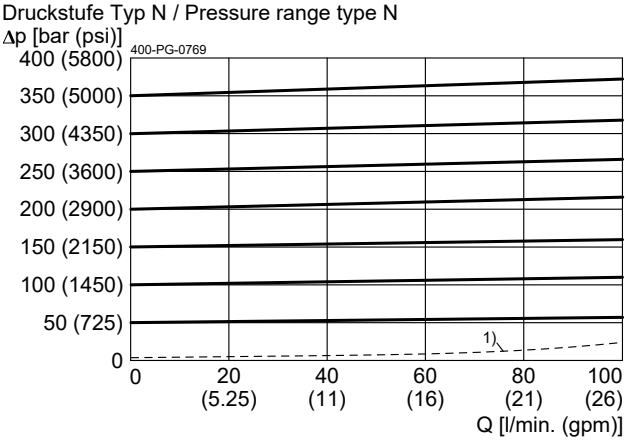

p_N = 350 bar (5000 psi)
1) Einsatzgrenze / Application limit

Δp = f (Q) Pressure drop-flow rate characteristic

Druckstufe Typ M / Pressure range type M

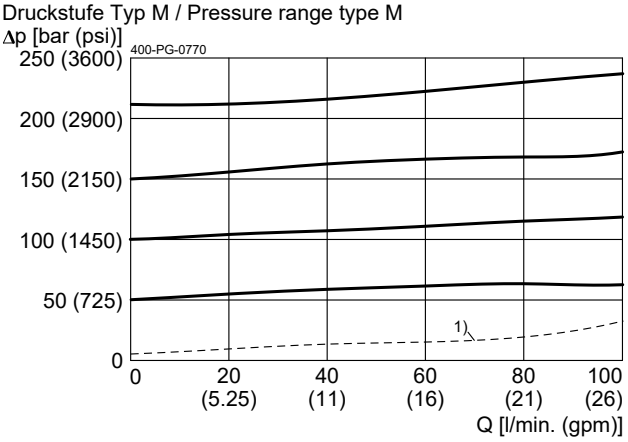

p_N = 210 bar (3000 psi)
1) Einsatzgrenze / Application limit

Δp = f (Q) Pressure drop-flow rate characteristic

Druckstufe Typ L / Pressure range type L

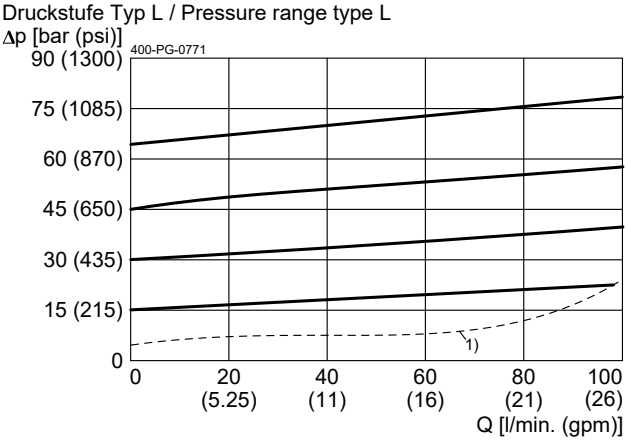

p_N = 65 bar (940 psi)
1) Einsatzgrenze / Application limit

Δp = f (Q) Pressure drop-flow rate characteristic

Über Rückschlagventil / Via check valve

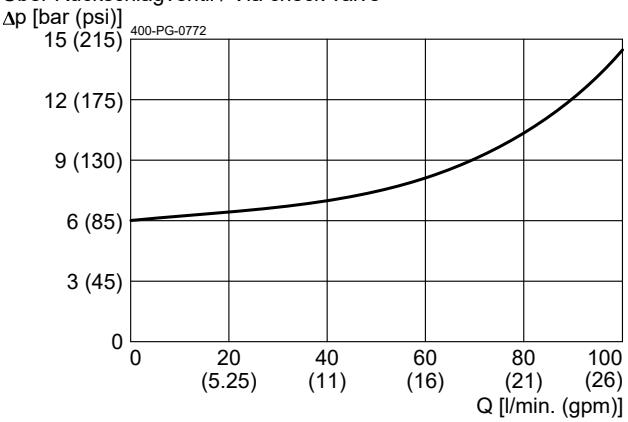

QL = f (Q;p) Leakage flow rate

Gemessen A nach B / Messured A to B

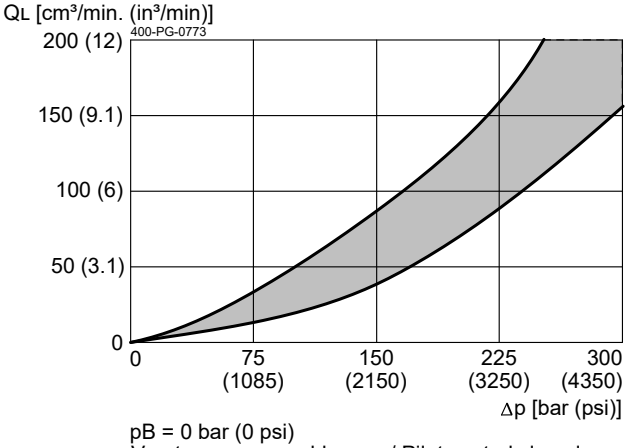

pB = 0 bar (0 psi)
Vorsteuerung geschlossen / Pilot control closed

Dimensions and sectional view

Beispiel für die Masseinheit:
Exampel for the dimensional units:

0.79	= 0.79 mm	millimeter
(.031)	= 0.031"	inch

Version "S": Einstellschraube mit Innensechskant (Standard)
Version "S": adjustment screw with internal hexagon (standard)

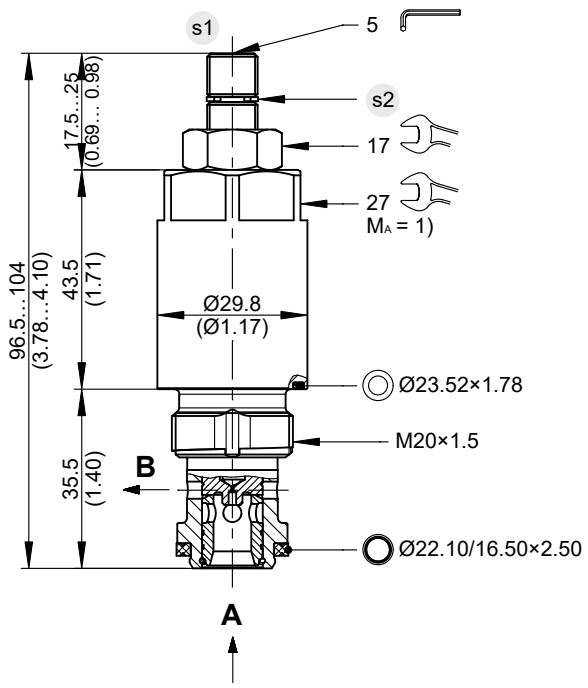

Version "H": Einstellschraube mit Handrad
Version "H": adjustment screw with handknob

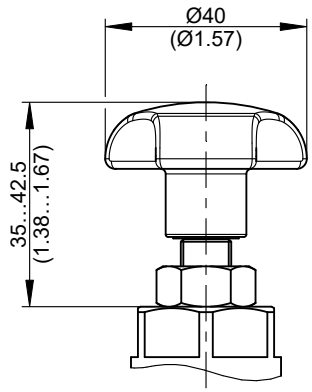

Einstellschraube mit Sicherungskappe
adjustment screw with tamper-proof cap

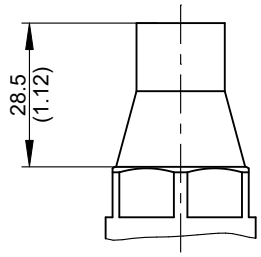

Installation information

NOTE!
1) When fitting the screw-in cartridge valve, use the specified tightening torque. The value can be found in the chapter "Technical data".

NOTE!
Set the required pressure with the adjusting screw (s1). After you have set the valve, lock the adjusting screw (s1) with the lock nut.

NOTE!
Valve settings can be sealed by fitting the tamper-proof cap. To fit the cap, the snap ring (s2) has to be removed. Subsequent adjustment is only possible by destroying the tamper-proof cap.

NOTE!
The seals are not available individually. The seal kit order number can be found in the chapter "Technical data".

ATTENTION!
Only qualified personnel with mechanical skills may carry out any maintenance work. Generally, the only work that should ever be undertaken is to check, and possibly replace, the seals. When changing seals, oil or grease the new seals thoroughly before fitting them.

Ordering code

z.B. D V P A - RV - 1 C - 10 - S N N - _

D	=	Pressure control valve
V	=	Vorgesteuert
P	=	Patronenausführung
A ... Q	=	Standard-Ausführung gemäß gültigem Datenblatt
Z ... R	=	Spezial-Ausführung (auf Anfrage)
RV	=	Mit eingebautem Rückschlagventil
1	=	Durchgangsform 1 (Mit internal Federraumentlastung)
C	=	Bauvolumen DC
10	=	Nennweite 10
S	=	Einstellschraube mit Innensechskant (Standard)
H	=	Einstellschraube mit Handknopf
N	=	Druckstufe 10...350 bar / 145…5000 psi (normal spring)
M	=	Druckstufe 10...210 bar / 145…3000 psi (medium spring)
L	=	Druckstufe 10...65 bar / 145…940 psi (light spring)
N	=	NBR (Nitril-Butadien-Kautschuk / NBR-Dichtungen) (Standard)
V	=	FKM (Fluor-Kautschuk / VITON-Dichtungen)
		(Spezial-Dichtungen auf Anfrage)
1 ... 9	=	Technische Stand (ein Buchstabe weggelassen)
		W
		W

IMPORTANT!
Sicherungskappe (Plombierung) für Einstellschraube ist bei Bedarf separat im Katalog zu bestellen.

Related data sheets

Reference	Description
400-P-040011	Form tools
400-P-060111	Cavity DC
400-P-740101	Threaded port body DC-12

info.ch@bucherhydraulics.com www.bucherhydraulics.com

© 2025 by Bucher Hydraulics AG Frutigen, 3714 Frutigen, Switzerland

All rights reserved.
Data is provided for the purpose of product description only, and must not be construed as warranted characteristics in the legal sense. The information does not relieve users from the duty of conducting their own evaluations and tests. Because the products are subject to continual improvement, we reserve the right to amend the product specifications contained in this catalogue.

BUCHER hydraulics

WWW.SUMY.IR

Pressure valve
Sequence function

Q_{max} = 100 l/min, p_{max} = 350 bar
pilot operated, spool type, mechanically adjustable
Type series: DVPA-RV-3D-10...

- Screw-in cartridge valve
- For cavity DD
- All external parts with zinc-nickel plating according to DIN EN ISO 19598
- Installation in threaded port body type DDY-12
- Seated pilot stage
- Very stable operation
- Sensitive adjustment
- With external spring space relief
- With built-in check valve

Description

These two-stage pressure-relief valves, series DVPA-RV-3D-..., are size 10, screw-in cartridge valves with a seated pilot stage and an M24×1.5 mounting thread. They are designed on the proven sliding-spool principle. The spring chamber is drained with an additional connection. The pressure applied to the secondary connection has no influence on the setting of the valve. To obtain a reliable pressure setting over the entire pressure range, the overall pressure range is divided into different pressure levels. These valves are mainly used in certain mobile and industrial applications to limit the system pressure. The pressure is set by means of an adjusting spindle. All external parts of the screw-in valves are zinc-nickel plated and are thus suitable for use in the harshest operating environments. For installation and further information, please refer to the section related data sheets.

Symbol

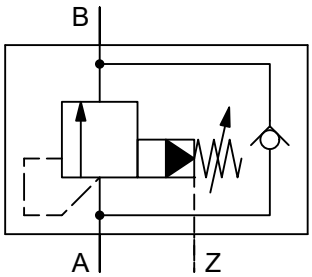

WWW.SUMY.IR

Technical data

General characteristics	Description, value, unit
Function group	Pressure valve
Function	Sequence function
Design	Screw-in cartridge valve
Controls	mechanically adjustable
Characteristic	pilot operated, spool type
Construction size	NG 10
Thread size	M24×1,5
Mounting attitude	unrestricted
Weight	0.23 kg
Cavity acc. factory standard	For cavity DD
Tightening torque steel	65 Nm
Tightening torque aluminium	50 Nm
Tightening torque tolerance	± 10 %
Minimum ambient temperature	- 30 °C
Maximum ambient temperature	+ 80 °C
Surface protection	All external parts with zinc-nickel plating according to DIN EN ISO 19598
Sealing material	see ordering code
Seal kit order number	NBR: DS-216-N / FKM: DS-216-V

Hydraulic characteristics	Description, value, unit
Maximum operating pressure	350 bar
Maximum flow rate	100 l/min
Flow direction	see symbol
Hydraulic fluid	HL and HLP mineral oil according to DIN 51 524; other fluids on request!
Minimum fluid temperature	- 30 °C
Maximum fluid temperature	+ 80 °C
Viscosity range	10 ... 650 mm^2/s (cSt)
Recommended viscosity range	15 ... 250 mm^2/s (cSt)
Minimum fluid cleanliness (cleanlineless class according to ISO 4406:1999)	class 20/18/15
Definition of cracking pressure for check valve	Via check valve = A to B ca. 6 bar (look to perfomance graph)
Pressure adjustment range	pressure range L: 1 turn = ca. 13 bar pressure range M: 1 turn = ca. 38 bar pressure range N: 1 turn = ca. 65 bar

Performance graphs

measured with oil viscosity 33.0 mm²/s (cSt)

Δp = f (Q) Pressure drop-flow rate characteristic

Druckstufe Typ N / Pressure range type N

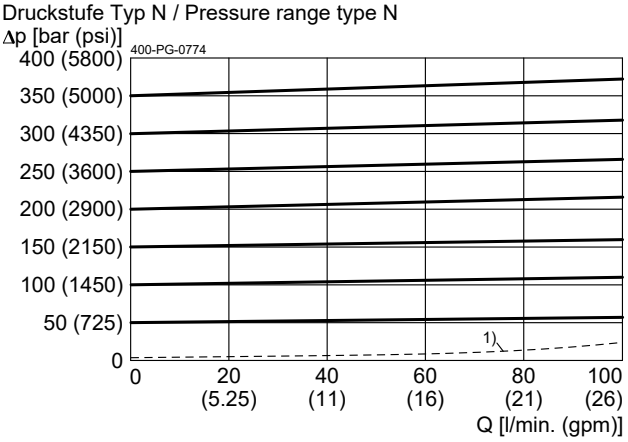

p_N = 350 bar (5000 psi)
1) Einsatzgrenze / Application limit

Δp = f (Q) Pressure drop-flow rate characteristic

Druckstufe Typ M / Pressure range type M

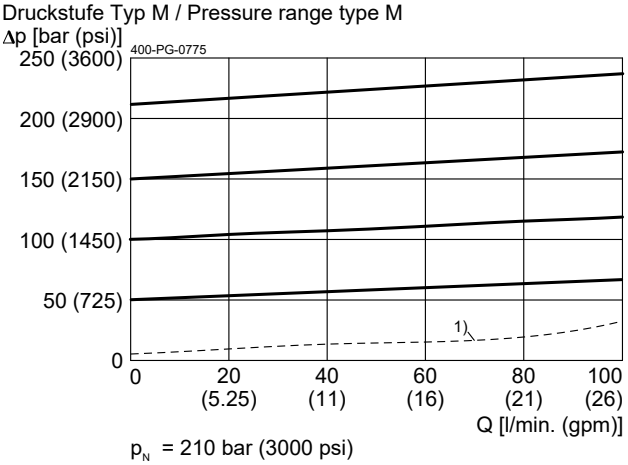

p_N = 210 bar (3000 psi)
1) Einsatzgrenze / Application limit

Δp = f (Q) Pressure drop-flow rate characteristic

Druckstufe Typ L / Pressure range type L

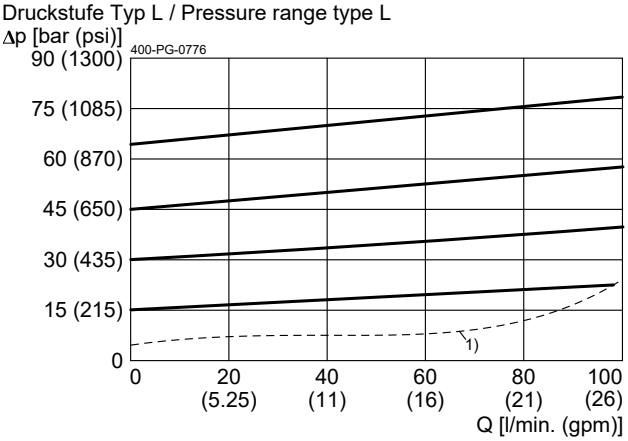

p_N = 65 bar (940 psi)
1) Einsatzgrenze / Application limit

Δp = f (Q) Pressure drop-flow rate characteristic

Über Rückschlagventi / Via check valve

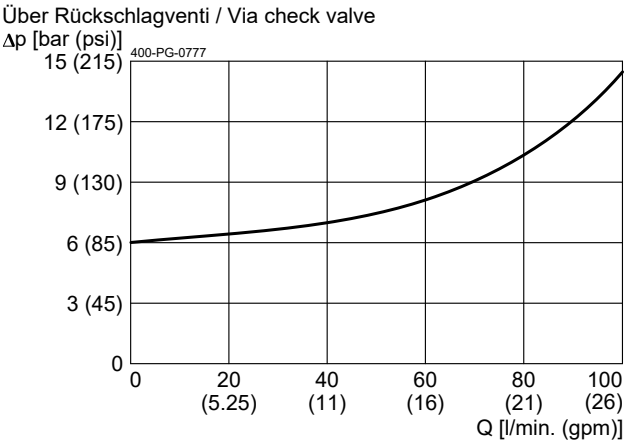

QL = f (Q;p) Leakage flow rate

Gemessen A nach B / Messured A to B

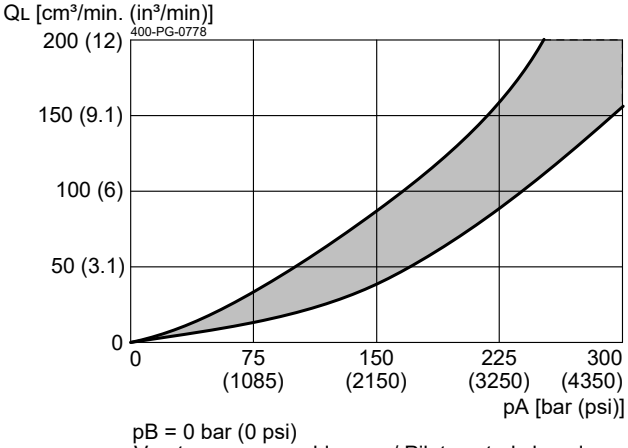

pB = 0 bar (0 psi)
Vorsteuerung geschlossen / Pilot control closed

p = f (Q) Pressure-flow rate

Steuerölverbrauch in Z / Control oil consumption at Z

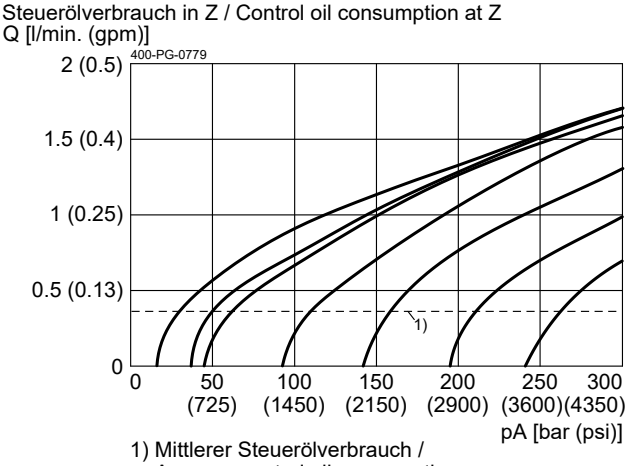

1) Mittlerer Steuerölverbrauch /
Average control oil consumption

Dimensions and sectional view

Beispiel für die Masseinheit:
Exampel for the dimensional units:

0.79	= 0.79 mm	millimeter
(.031)	= 0.031"	inch

Version "S": Einstellschraube mit Innensechskant (Standard)
Version "S": adjustment screw with internal hexagon (standard)

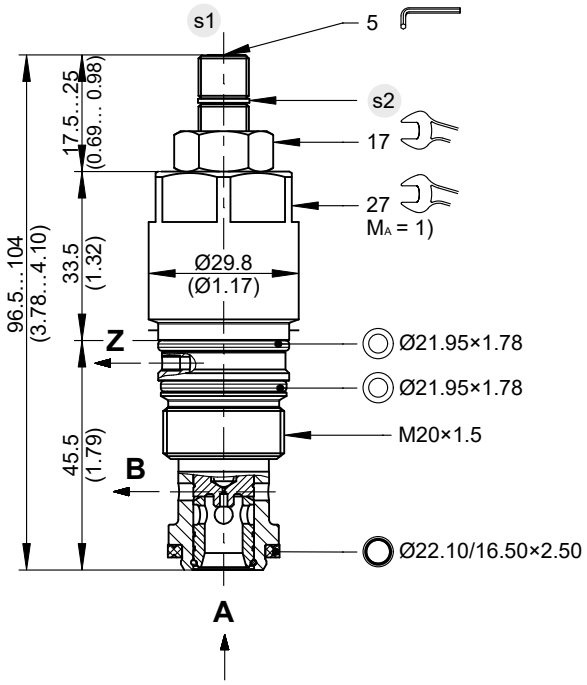

Version "H": Einstellschraube mit Handrad
Version "H": adjustment screw with handknob

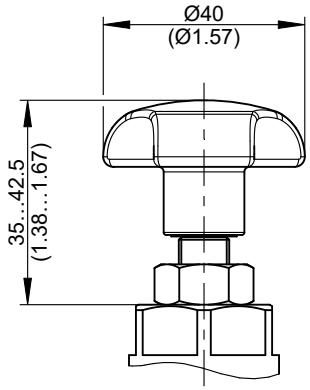

Einstellschraube mit Sicherungskappe
adjustment screw with tamper-proof cap

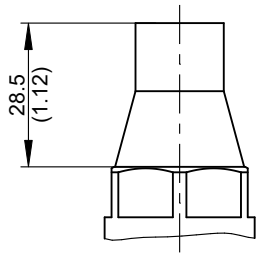

Installation information

NOTE!
1) When fitting the screw-in cartridge valve, use the specified tightening torque. The value can be found in the chapter "Technical data".

NOTE!
Set the required pressure with the adjusting screw (s1). After you have set the valve, lock the adjusting screw (s1) with the lock nut.

NOTE!
Valve settings can be sealed by fitting the tamper-proof cap. To fit the cap, the snap ring (s2) has to be removed. Subsequent adjustment is only possible by destroying the tamper-proof cap.

NOTE!
The seals are not available individually. The seal kit order number can be found in the chapter "Technical data".

ATTENTION!
Only qualified personnel with mechanical skills may carry out any maintenance work. Generally, the only work that should ever be undertaken is to check, and possibly replace, the seals. When changing seals, oil or grease the new seals thoroughly before fitting them.

Ordering code

EX. D V P A - RV - 3 D - 10 - S N N - _

D	=	Pressure control valve
V	=	Vorgesteuert
P	=	Patrone ausführung
A ... Q	=	Standard-Ausführung gemäß gültigem Datenblatt
Z ... R	=	Spezial-Ausführung (auf Anfrage)
RV	=	Mit eingebautem Rückschlagventil
3	=	Durchflussrichtung 3 (Mit external spring space drain)
D	=	Bauvariante DD
10	=	Nenngröße 10
S	=	Einstellschraube mit Innensechskant (Standard)
H	=	Einstellschraube mit Handknopf
N	=	Druckstufe 10...350 bar / 145…5000 psi(normal spring)
M	=	Druckstufe 10...210 bar / 145…3000 psi (medium spring)
L	=	Druckstufe 10...65 bar / 145…940 psi (light spring)
N	=	NBR (Nitril-Butadien-Kautschuk / NBR) (Standard)
V	=	FKM (Fluor-Kautschuk / VITON)
		(Spezial-Dichtungen auf Anfrage)
1 ... 9	=	Technische Stand (ein Buchstabe weglassen)
		W
		W

IMPORTANT!
Sicherungskappe (Plombierung) für Einstellschraube ist bei Bedarf separat im Katalog zu bestellen.

Related data sheets

Reference	Description
400-P-040011	Form tools
400-P-060121	Cavity DD
400-P-740112	Threaded port body DDY-12

info.ch@bucherhydraulics.com www.bucherhydraulics.com

© 2025 by Bucher Hydraulics AG Frutigen, 3714 Frutigen, Switzerland

All rights reserved.
Data is provided for the purpose of product description only, and must not be construed as warranted characteristics in the legal sense. The information does not relieve users from the duty of conducting their own evaluations and tests. Because the products are subject to continual improvement, we reserve the right to amend the product specifications contained in this catalogue.

Electrically Operated Pressure-Relief Cartridge, Size 10

Q_{max} = 140 l/min (37 gpm), p_{max} = 350 bar (5000 psi)
seated pilot stage, spool-type design, electrically operated
Series WUVPOC-1…, WUVPLC-1…

- Compact construction for cavity type DC – M24x1.5 to Bucher standard
- Bypass circuit ON / OFF
- 2-pressure switching HI / LO
- Damped opening (on request)
- Low unloaded bypass pressure with “OC” model to 100 l/min
- High pressure wet-armature solenoids
- The slip-on coil can be rotated, and it can be replaced without opening the hydraulic envelope
- Various plug-connector systems and voltages are available
- All exposed parts with zinc-nickel plating
- Can be fitted in a line-mounting body

1 Description

Series WUVPOC-1… / WUVPLC-1… and WUVPUC-1… valves are size 10 electrically operated pressure relief cartridges with an M24x1.5 mounting thread. They have a seated pilot stage and a spool-type main stage. Using the external pressure adjustment, the higher pressure p1 (relief setting) and the lower pressure p2 (a secondary pressure, or the unloaded pressure) can be varied smoothly and independently of one another without opening the hydraulic envelope, and either pressure can be selected. The “OC” model is mainly used for bypass circuits that can be unloaded with low Δp values (ON / OFF). The lower Δp values result in less heating of the oil and thus lower energy costs for the user. The “LC” model is mainly used for 2-pressure circuits (HI / LO). The “UC” model (available on request) is fitted with a damping spool that, by ensuring a damped opening, prevents undesirable pressure spikes. When the pilot stage is active (pressure relief function), pilot oil is drained internally to port B. Any residual- or surge-pressure in port B (Tank) is therefore additive to the valve setting. All external parts of the cartridge are zinc-nickel plated to DIN 50 979 and are thus suitable for use in the harshest operating environments. If you intend to manufacture your own cavities or are designing a line-mounting installation, please refer to the section “Related data sheets”.

2 Symbol

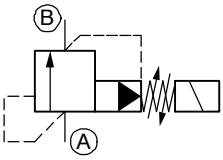

3 Technical data

General characteristics	Description, value, unit
Designation	pressure-relief cartridge valve
Design	spool-type design, seated pilot, electrically operated
Mounting method	screw-in cartridge M24 x 1.5
Tightening torque	65 Nm ± 10 % (50 ft-lbs ± 10 %)
Size	nominal size 10, cavity type DC to Bucher standard
Weight	0.52 kg (1.15 lb)

General characteristics	Description, value, unit	
Mounting attitude	unrestricted	
Ambient temperature range	-25 °C … +50 °C	(-13 °F … +122 °F)

Hydraulic characteristics	Description, value, unit	
Maximum operating pressure in port A [1)]	350 bar	(5000 psi)
Maximum allowable pressure in port B (tank)	250 bar	(3600 psi)
Pressure adjustment range:	350 bar 250 bar 160 bar 100 bar 40 bar	(5000 psi) (3600 psi) (2300 psi) (1400 psi) (570 psi)
Maximum flow rate	140 l/min (at > 100 l/min, "LC" model recommended by the manufacturer)	(37 gpm)
Flow direction	A → B, see symbols	
Hydraulic fluid	HL and HLP mineral oil to DIN 51 524; for other fluids, please contact BUCHER	
Hydraulic fluid temperature range	-25 °C … +80 °C	(-13 °F … +176 °F)
Viscosity range	10…500 mm^2/s (cSt), recommended 15...250 mm^2/s (cSt)	
Minimum fluid cleanliness Cleanliness class to ISO 4406 : 1999	class 20/18/15	

Electrical characteristics	Description, value, unit
Supply voltage	12 V DC, 24 V DC / 115 V AC, 230 V AC (50 … 60 Hz)
Supply voltage tolerance	± 10 %
Nominal power consumption	V DC = 27 W V AC = 25 W
Relative duty cycle	100 %
Protection class to ISO 20 653 / EN 60 529	IP 65 / IP 67 / IP 69K, see “Ordering code” (with appropriate mating connector and proper fitting and sealing)
Electrical connection	DIN EN 175301-803, 3-pin 2 P+E (standard) for other connectors, see “Ordering code”

ATTENTION!
[1)] Any residual- or surge-pressure in port B (tank pressure) is additive to the pressure setting in port A.

4 Performance graphs

measured with oil viscosity 33 mm^2/s (cSt)

bypass circuit (ON/OFF) – WUVPOC-…

Δp = f (Q) Pressure-drop characteristic (350 bar)

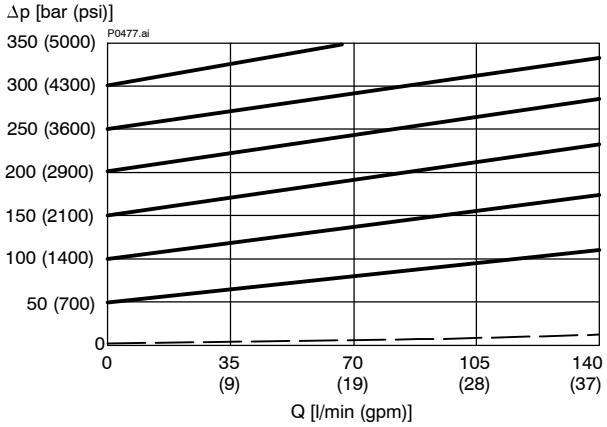

Δp = f (Q) Pressure-drop characteristic (250 bar)

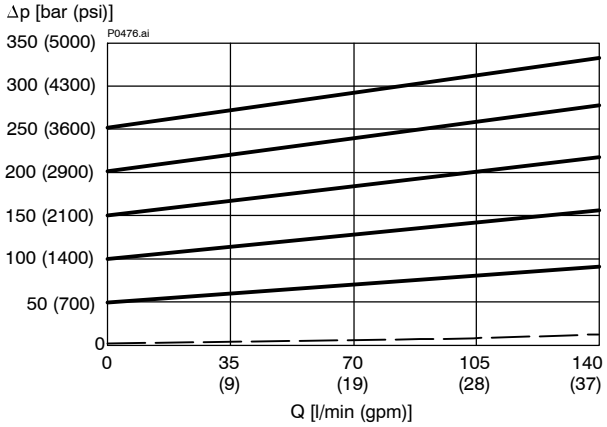

Δp = f (Q) Pressure-drop characteristic (160 bar)

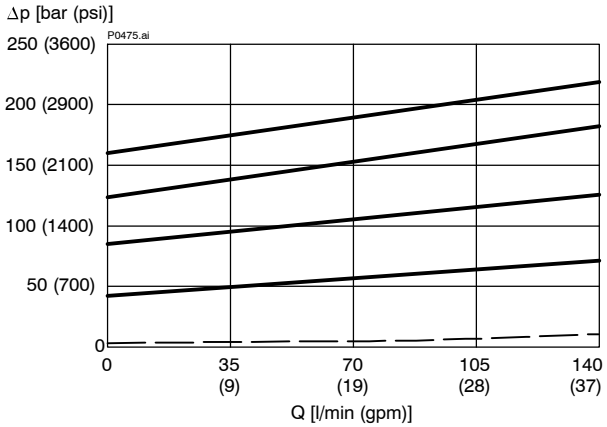

Δp = f (Q) Pressure-drop characteristic (100 bar)

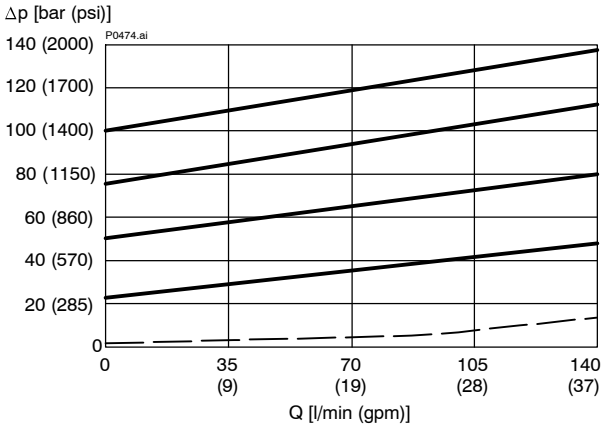

Δp = f (Q) Pressure-drop characteristic (40 bar)

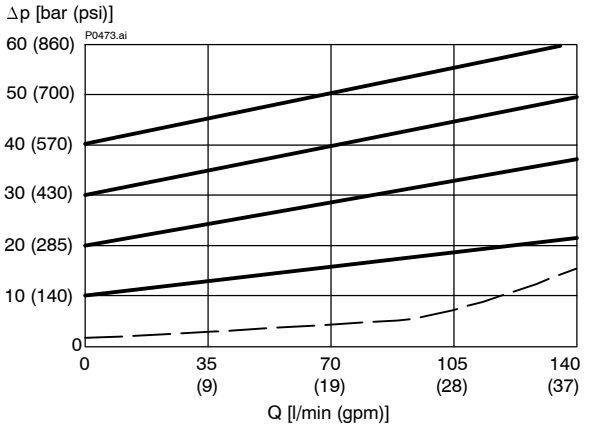

application limit / minimum bypass pressure

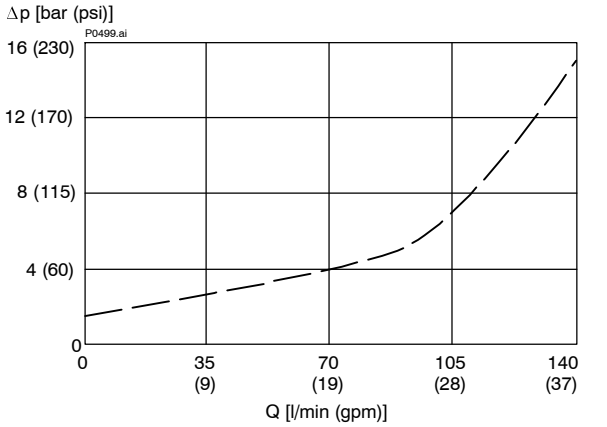

– – – – p2 min. = application limit / minimum bypass pressure

Δp = f (Q) Pressure-drop characteristic (350 bar)

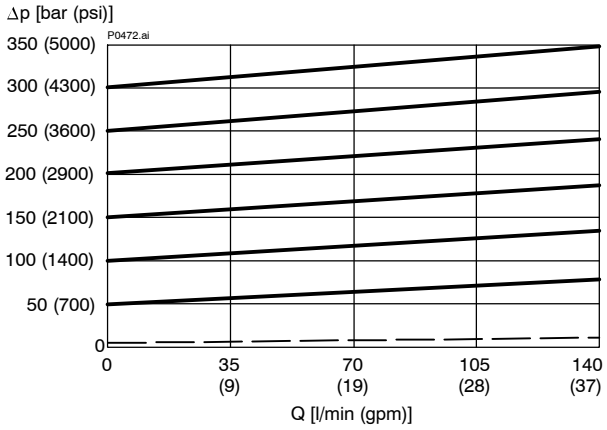

Δp = f (Q) Pressure-drop characteristic (250 bar)

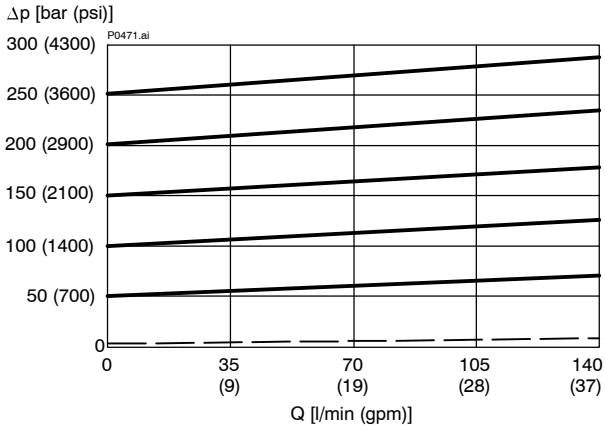

Δp = f (Q) Pressure-drop characteristic (160 bar)

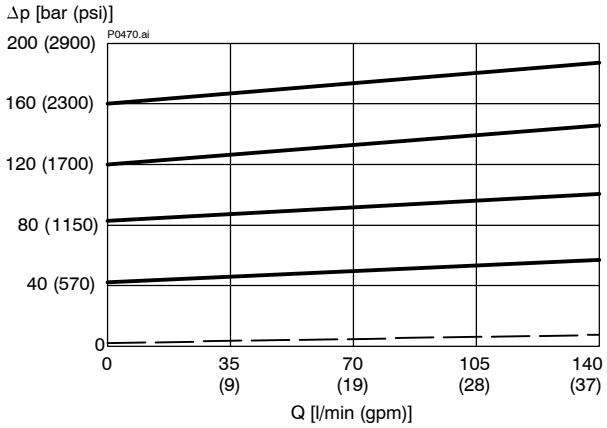

Δp = f (Q) Pressure-drop characteristic (100 bar)

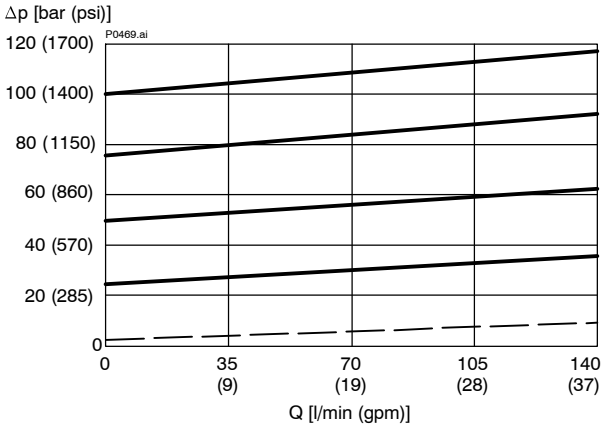

Δp = f (Q) Pressure-drop characteristic (40 bar)

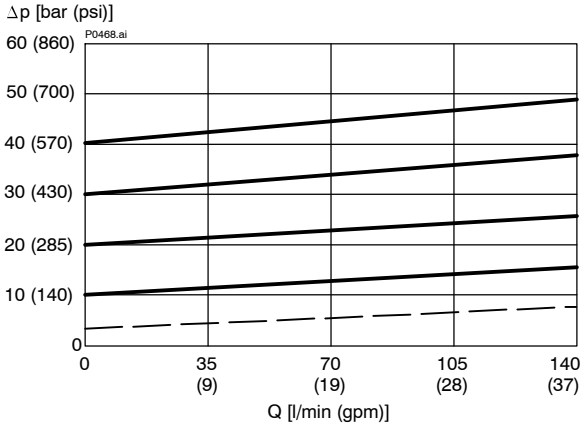

application limit / minimum bypass pressure

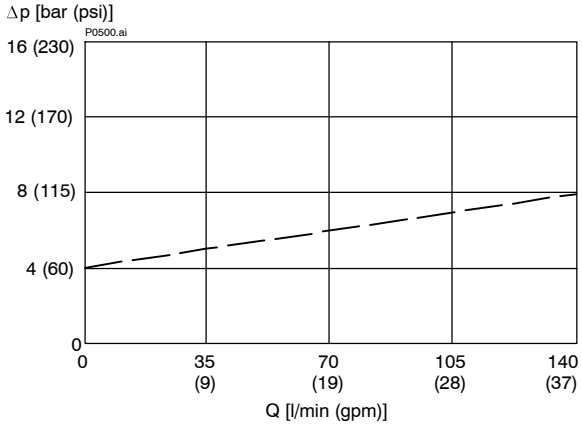

– – – – p2 min. = application limit / minimum bypass pressure

5 Dimensions & sectional view

Type WUVPOC…

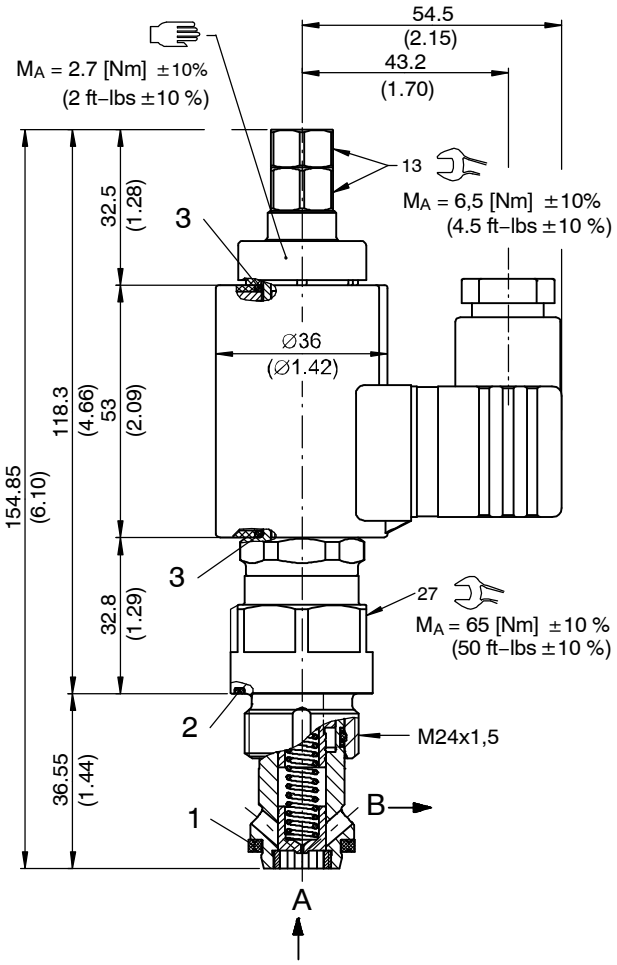

Seal kit NBR no. DS-261-N [2)]

Item	Qty.	Description			
1	1	Seal ring		∅ 22.10 / 16.50 x 2.50	
2	1	O-ring	no. 021	∅ 23.52 x 1.78	N90
3	2	O-ring		∅16.00 x 2.00	V83

IMPORTANT!

2) Seal kit with FKM (Viton) seals, no. DS-261-V

Type WUVPLC…

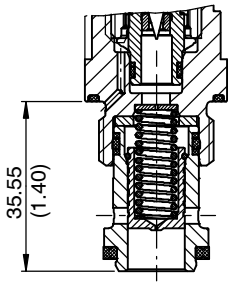

6 Installation information

IMPORTANT!
When fitting the cartridges, use the specified tightening torque.

ATTENTION!
Only qualified personnel with mechanical skills may carry out any maintenance work. Generally, the only work that should ever be undertaken is to check, and possibly replace, the seals. When changing seals, oil or grease the new seals thoroughly before fitting them.

WWW.SUMY.IR

7 Pressure adjustment

(pressure p1 must be set first, followed by pressure p2)

Nr.	Setting the higher pressure p1 on series WUVPOC… / WUVPLC… as the higher working pressure with solenoid energised:
1)	Slacken and remove cap nut item A (13 A/F).
2)	Slacken lock nut item D (13 A/F) approx. ½ turn.
3)	With pump running and with the solenoid energised, use the two flats (7 A/F) to turn adjusting screw item B until the required pressure is set in port A.
4)	Hold the adjusting screw item B using the 7 A/F flats while tightening the lock nut item D (13 A/F).
5)	Refit and tighten the cap nut item A.

Nr.	Setting the lower pressure p2 (emergency pressure setting) on series WUVPOC… / WUVPLC… (a second pressure or alternatively, unload) with solenoid de-energised:
1)	Slacken and remove cap nut item A (13 A/F).
2)	With pump running and with the solenoid de-energised, use the adjusting screw item C (2.5 A/F hex. socket) to set the pressure p2 in port A.
3)	Refit and tighten the cap nut item A. (p2 min.: 2 … 15 bar for WUVPOC, dependent on flow). (p2 min.: 4 … 8 bar for WUVPLC, dependent on flow).

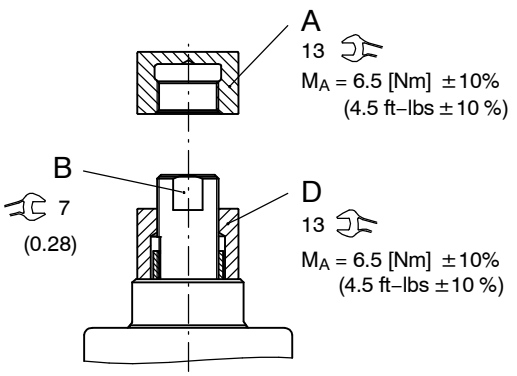

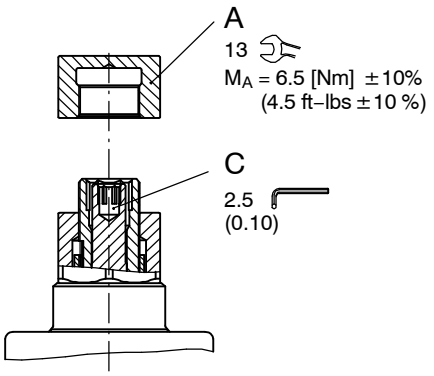

ATTENTION!
When setting pressure p1, adjusting screw item B must not be overtightened as this can damage the shoulder which limits the maximum pressure setting. As soon as a definite end-stop can be felt, do not turn any further.

Example – showing the adjustable pressures p1 and p2:

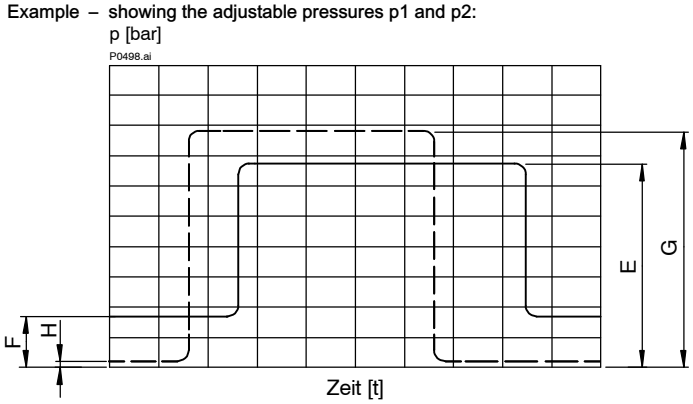

H = when item C is unscrewed until flush
E, G = pressure p1; as set with item B, solenoid energised
F = pressure p2, min. as H, max. as E and G, adjustable at item C, solenoid de-energised

———
Type WUVPLC…
The relief pressure p1 is set as the higher working pressure (E) (solenoid energised)
p2 as the lower working pressure (F) (solenoid de-energised)

– – – –
Type WUVPOC… / (WUVPUC… available on request)
The relief pressure p1 is set as the higher working pressure (G) (solenoid energised)
p2 as the lowest unloaded bypass pressure (H) = item C flush (solenoid de-energised)

8 Ordering code

Ex. WU V P O C - 1 C O - 35 - 10 _ - 1 24 D _

WU	=	electr. operated pressure-relief valve
V	=	seated two-stage
P	=	cartridge design
O	=	for unloading duty (ON/OFF)
L	=	for two-pressure duty (HI/LO)
U	=	for unloading duty, damped opening (on request)
C ... Q	=	standard model per relevant data sheet
Y ... R	=	special features - please consult BUCHER
1	=	pressure function 1 (with internal remote-control port B)
C	=	cavity type DC
O	=	normally open
35	=	pressure range 10 … 350 bar
25	=	pressure range 10 … 250 bar
16	=	pressure range 10 … 160 bar
10	=	pressure range 10 … 100 bar
04	=	pressure range 10 … 040 bar
10	=	nominal size 10
(blank)	=	NBR (Nitrile) seals (**standard**)
V	=	FKM (Viton) seals (special seals - please contact BUCHER)
1 ... 9	=	design stage (omit when ordering new units)
...	=	voltage e.g. **24** (24 V)
D	=	current DC
A	=	current AC
(blank)	=	DIN EN 175301-803 connection with mating plug (**standard, IP 65**)
M100	=	DIN EN 175301-803 connection without mating plug
C	=	Kostal plug connection (IP 65)
JT	=	Junior Timer radial plug connection (with protection diode, IP65)
IT	=	Junior Timer axial plug connection (with protection diode, IP65)
D	=	Deutsch plug connection DT04-2P (IP 67/69K)
DT	=	Deutsch plug connection DT04-2P (with protection diode, IP 67/69K)
S	=	AMP Superseal 1.5 (IP67) / Metri-Pack 150 (IP65) plug connection
F	=	flying leads (500 mm)

mating plug not supplied

9 Related data sheets

Reference (Old no.)	Description
400-P-040011	The form-tool hire programme
400-P-060111	Cavity type DC
400-P-120110	Coils for screw-in cartridge valves
400-P-740101	Line- and manifold-mounting body, type DC-12 (G 1/2”)

info.ch@bucherhydraulics.com www.bucherhydraulics.com

© 2018 by Bucher Hydraulics AG Frutigen, CH-3714 Frutigen
All rights reserved.
Data is provided for the purpose of product description only, and must not be construed as warranted characteristics in the legal sense. The information does not relieve users from the duty of conducting their own evaluations and tests. Because the products are subject to continual improvement, we reserve the right to amend the product specifications contained in this catalogue.

Classification: 430.305.300.305.320.300

Electrically Operated Pressure-Relief Cartridge, Size 10

Q_{max} = 140 l/min (37 gpm), p_{max} = 350 bar (5000 psi)
seated pilot stage, spool-type design, with remote contral port Z
Series WUVPOC-2…, WUVPLC-2…

- Compact construction for cavity type DD – M24x1.5 to Bucher standard
- Bypass circuit ON / OFF
- 2-pressure switching HI / LO
- Low unloaded bypass pressure with “OC” model to 100 l/min
- With remote-control port Z
- High pressure wet-armature solenoids
- The slip-on coil can be rotated, and it can be replaced without opening the hydraulic envelope
- Various plug-connector systems and voltages are available
- All exposed parts with zinc-nickel plating
- Can be fitted in a line-mounting body

1 Description

Series WUVPOC-2… and WUVPLC-2… valves are size 10 electrically operated pressure relief cartridges with an M24x1.5 mounting thread. They have a seated pilot stage and a spool-type main stage. Using the external pressure adjustment, the higher pressure p1 (relief setting) and the lower pressure p2 (a secondary pressure, or the unloaded pressure) can be varied smoothly and independently of one another without opening the hydraulic envelope, and either pressure can be selected. The “OC” model is mainly used for bypass circuits that can be unloaded with low Δp values (ON / OFF). The lower Δp values result in less heating of the oil and thus lower energy costs for the user. The “LC” model is mainly used for 2-pressure circuits (HI / LO). Using the remote-control port Z, these valves can also be remotely controlled or unloaded by means of external pressure relief valves or directional valves. When the pilot stage is active (pressure relief function), pilot oil is drained internally to port B. Any residual- or surge-pressure in port B (Tank) is therefore additive to the valve setting. All external parts of the cartridge are zinc-nickel plated to DIN 50 979 and are thus suitable for use in the harshest operating environments. If you intend to manufacture your own cavities or are designing a line-mounting installation, please refer to the section “Related data sheets”.

2 Symbol

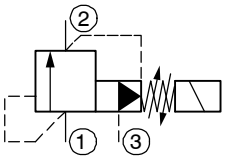

3 Technical data

General characteristics	Description, value, unit
Designation	pressure-relief cartridge valve
Design	spool-type design, seated pilot, with remote control port Z, electrically operated
Mounting method	screw-in cartridge M24 x 1.5
Size	nominal size 10, cavity type DD to Bucher standard
Weight	0.52 kg (1.15 lb)
Mounting attitude	unrestricted
Ambient temperature range	-25 °C … +50 °C (-13 °F … +122 °F)

Hydraulic characteristics	Description, value, unit	
Maximum operating pressure in port A and Z [1)]	350 bar	(5000 psi)
Maximum allowable pressure in port B (tank)	250 bar	(3600 psi)
Pressure adjustment range:	350 bar 250 bar 160 bar 100 bar 40 bar	(5000 psi) (3600 psi) (2300 psi) (1400 psi) (570 psi)
Maximum flow rate	140 l/min (at > 100 l/min, "LC" model recommended by the manufacturer)	(37 gpm)
Flow direction	A → B, see symbols	
Hydraulic fluid	HL and HLP mineral oil to DIN 51 524; for other fluids, please contact BUCHER	
Hydraulic fluid temperature range	-25 °C … +80 °C	(-13 °F … +176 °F)
Viscosity range	10…500 mm^2/s (cSt), recommended 15...250 mm^2/s (cSt)	
Minimum fluid cleanliness Cleanliness class to ISO 4406 : 1999	class 20/18/15	

Electrical characteristics	Description, value, unit
Supply voltage	12 V DC, 24 V DC / 115 V AC, 230 V AC (50 … 60 Hz)
Supply voltage tolerance	± 10 %
Nominal power consumption	V DC = 27 W V AC = 25 W
Relative duty cycle	100 %
Protection class to ISO 20 653 / EN 60 529	IP 65 / IP 67 / IP 69K, see “Ordering code” (with appropriate mating connector and proper fitting and sealing)
Electrical connection	DIN EN 175301-803, 3-pin 2 P+E (standard) for other connectors, see “Ordering code”

ATTENTION!
[1)] Any residual- or surge-pressure in port B (tank pressure) is additive to the pressure setting in port A.

4 Performance graphs

measured with oil viscosity 33 mm²/s (cSt)

bypass circuit (ON/OFF) – WUVPOC-…

Δp = f (Q) Pressure-drop characteristic (350 bar)

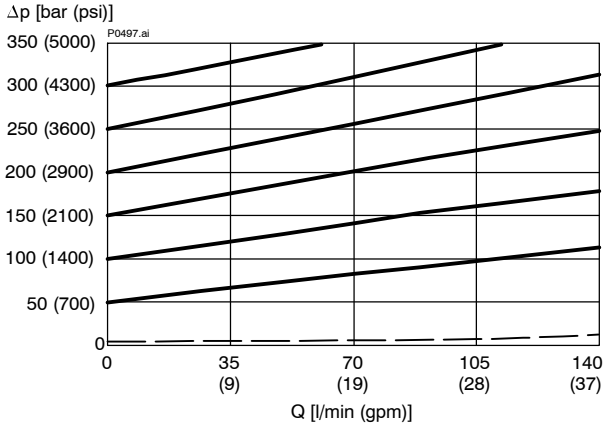

Δp = f (Q) Pressure-drop characteristic (250 bar)

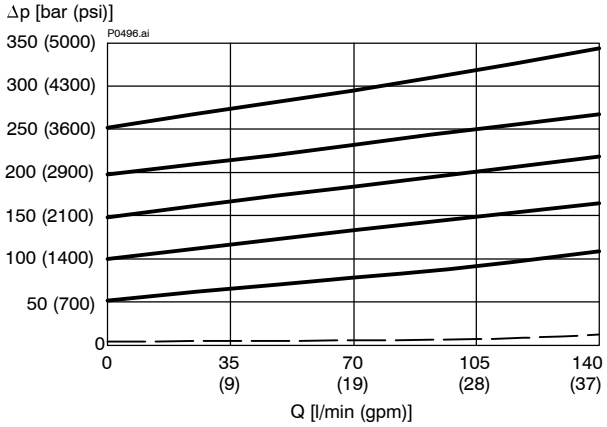

Δp = f (Q) Pressure-drop characteristic (160 bar)

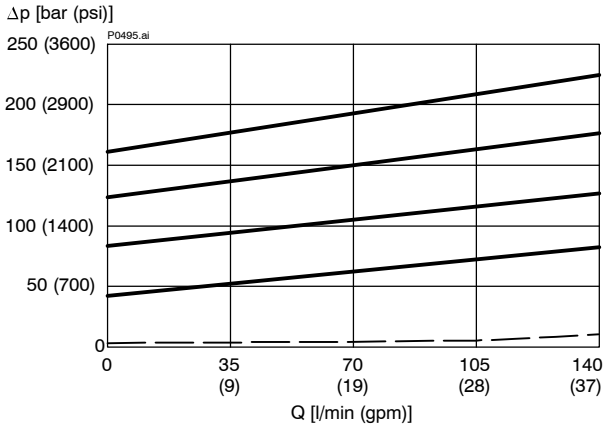

Δp = f (Q) Pressure-drop characteristic (100 bar)

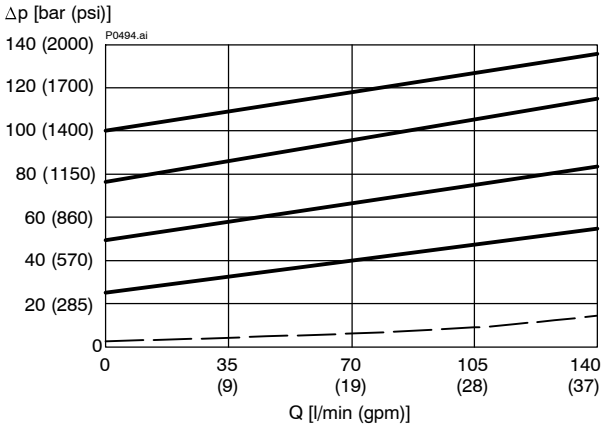

Δp = f (Q) Pressure-drop characteristic (40 bar)

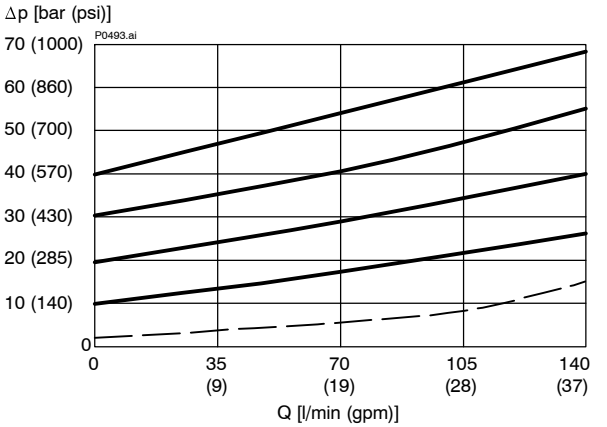

application limit / minimum bypass pressure

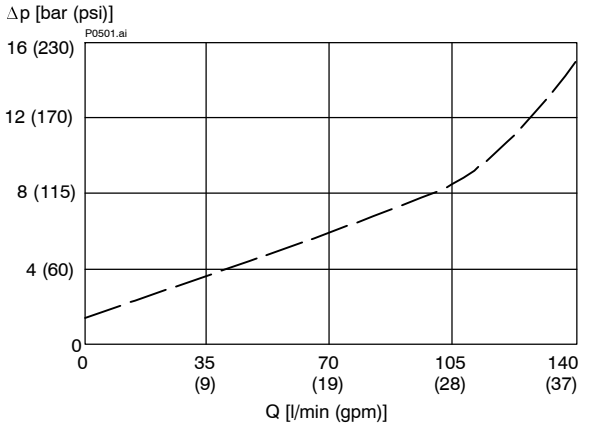

– – – – p2 min. = application limit / minimum bypass pressure

Δp = f (Q) Pressure-drop characteristic (350 bar)

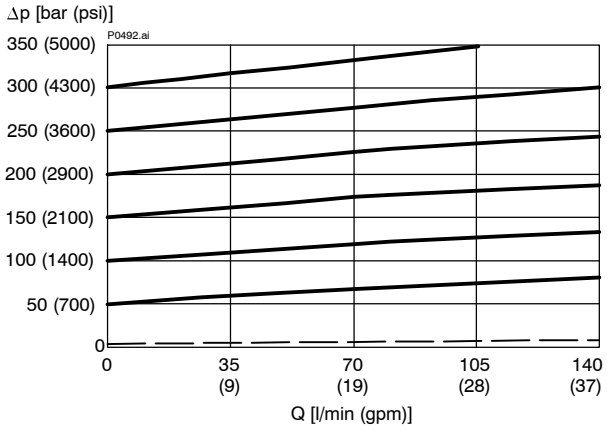

Δp = f (Q) Pressure-drop characteristic (250 bar)

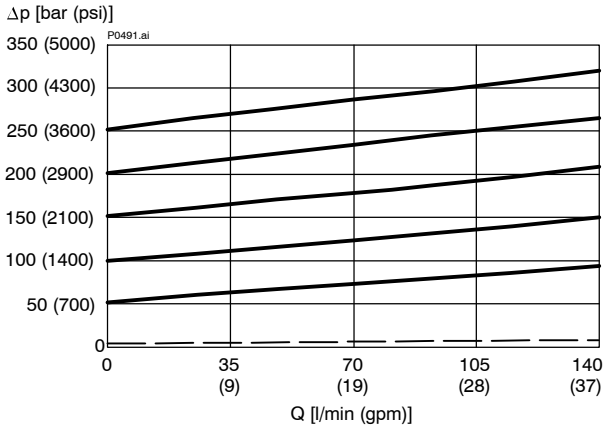

Δp = f (Q) Pressure-drop characteristic (160 bar)

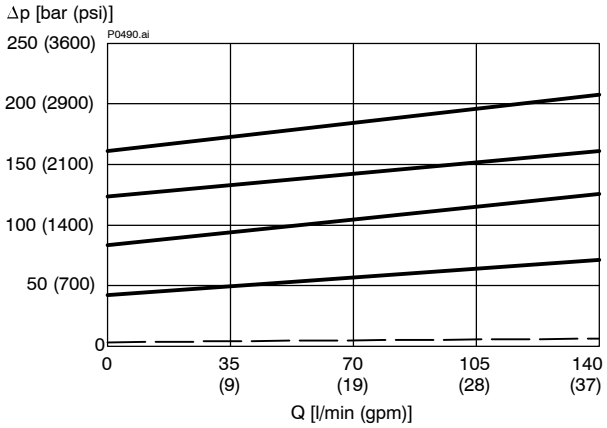

Δp = f (Q) Pressure-drop characteristic (100 bar)

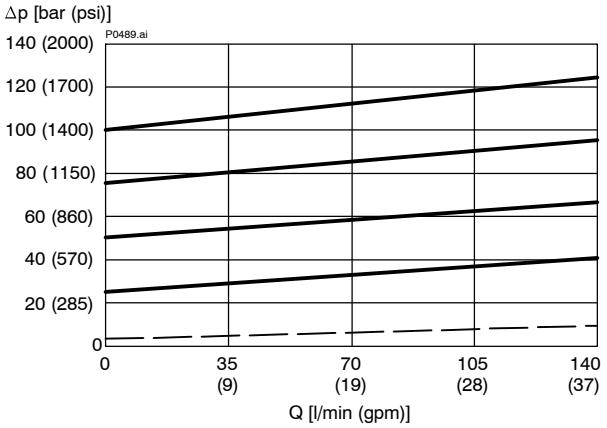

Δp = f (Q) Pressure-drop characteristic (40 bar)

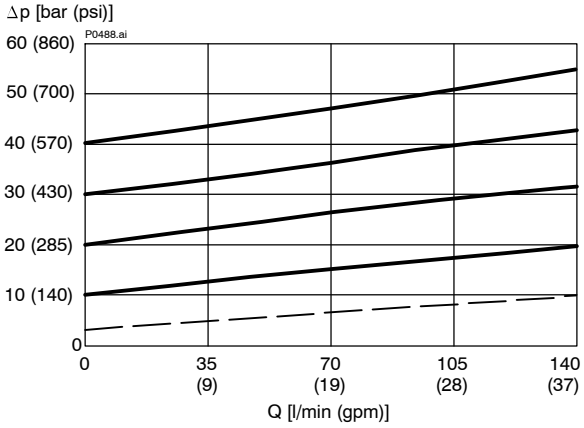

application limit / minimum bypass pressure

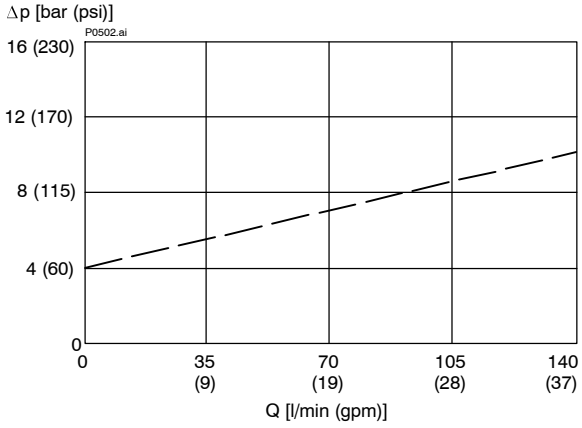

– – – – p2 min. = application limit / minimum bypass pressure

5 Dimensions & sectional view

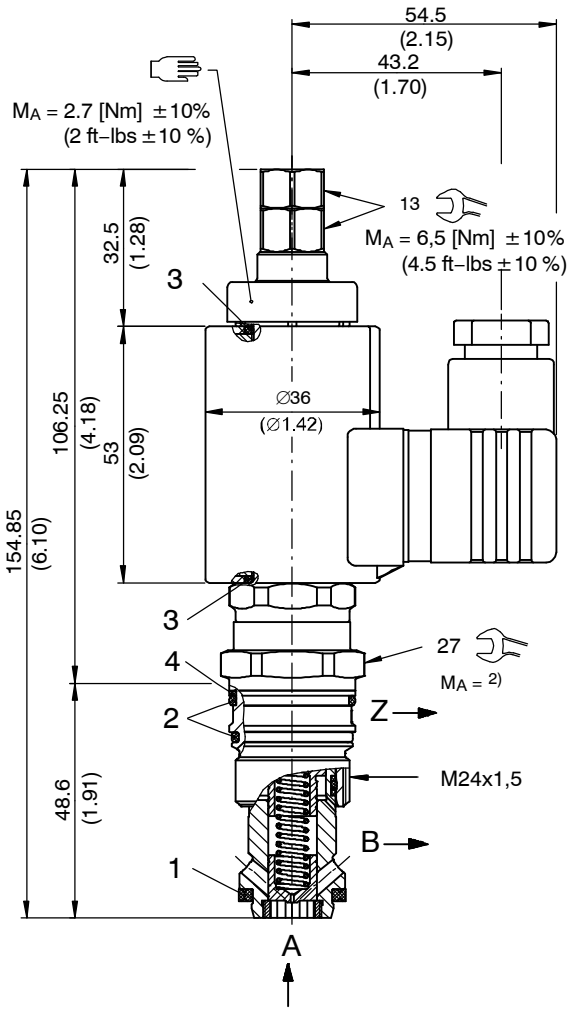

Type WUVPOC…

Tightening torque M_A 2) ± 10 %

Cavity type	DD	
When fitted in steel	65 [Nm]	(50 [ft-lbs])
When fitted in aluminium	50 [Nm]	(35 [ft-lbs])

Seal kit NBR no. DS-261-N 3)

Item	Qty.	Description		
1	1	Seal ring	∅ 22.10 / 16.50 x 2.50	
2	2	O-ring no. 020	∅ 21.95 x 1.78	N90
3	2	O-ring	∅16.00 x 2.00	V83
4	1	Backup ring	∅ 20.90 x 1.4 x 1.0	

IMPORTANT!

3) Seal kit with FKM (Viton) seals, no. DS-261-V

Type WUVPLC…

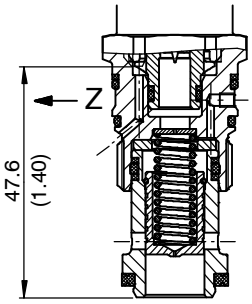

6 Installation information

IMPORTANT!
When fitting the cartridges, use the specified tightening torque.

ATTENTION!
Only qualified personnel with mechanical skills may carry out any maintenance work. Generally, the only work that should ever be undertaken is to check, and possibly replace, the seals. When changing seals, oil or grease the new seals thoroughly before fitting them.

WWW.SUMY.IR

7 Pressure adjustment

(pressure p1 must be set first, followed by pressure p2)

Nr.	Setting the higher pressure p1 on series WUVPOC… / WUVPLC… as the higher working pressure with solenoid energised:
1)	Slacken and remove cap nut item A (13 A/F).
2)	Slacken lock nut item D (13 A/F) approx. ½ turn.
3)	With pump running and with the solenoid energised, use the two flats (7 A/F) to turn adjusting screw item B until the required pressure is set in port A.
4)	Hold the adjusting screw item B using the 7 A/F flats while tightening the lock nut item D (13 A/F).
5)	Refit and tighten the cap nut item A.

Nr.	Setting the lower pressure p2 (emergency pressure setting) on series WUVPOC… / WUVPLC… (a second pressure or alternatively, unload) with solenoid de-energised:
1)	Slacken and remove cap nut item A (13 A/F).
2)	With pump running and with the solenoid de-energised, use the adjusting screw item C (2.5 A/F hex. socket) to set the pressure p2 in port A.
3)	Refit and tighten the cap nut item A. (p2 min.: 2 … 15 bar for WUVPOC, dependent on flow). (p2 min.: 4 … 10 bar for WUVPLC, dependent on flow).

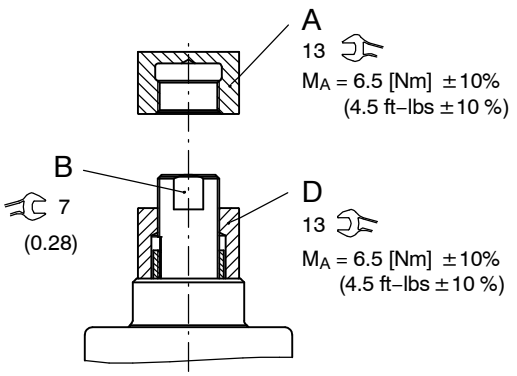

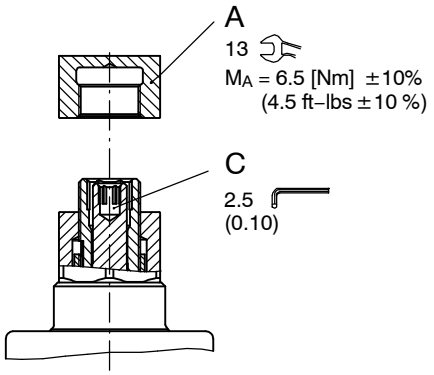

ATTENTION!
When setting pressure p1, adjusting screw item B must not be overtightened as this can damage the shoulder which limits the maximum pressure setting. As soon as a definite end-stop can be felt, do not turn any further.

Example – showing the adjustable pressures p1 and p2:

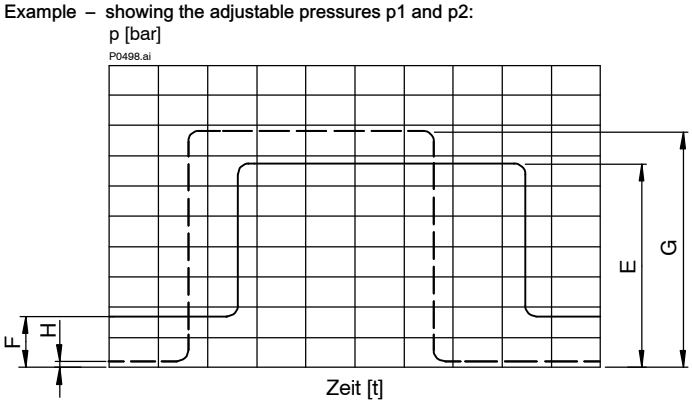

H = when item C is unscrewed until flush
E, G = pressure p1; as set with item B, solenoid energised
F = pressure p2, min. as H, max. as E and G, adjustable at item C, solenoid de-energised

———
Type WUVPLC…
The relief pressure p1 is set as the higher working pressure (E) (solenoid energised)
p2 as the lower working pressure (F) (solenoid de-energised)

– – – –
Type WUVPOC…
The relief pressure p1 is set as the higher working pressure (G) (solenoid energised)
p2 as the lowest unloaded bypass pressure (H) = item C flush (solenoid de-energised)

8 Ordering code

Ex. WU V P O C - 2 D O - 35 - 10 _ - 1 24 D _

WU	=	electr. operated pressure-relief valve
V	=	seated two-stage
P	=	cartridge design
O	=	for unloading duty (ON/OFF)
L	=	for two-pressure duty (HI/LO)
C ... Q	=	standard model per relevant data sheet
Y ... R	=	special features - please consult BUCHER
2	=	pressure function 2 (with remote control port Z)
D	=	cavity type DD
O	=	normally open
35	=	pressure range 10 … 350 bar
25	=	pressure range 10 … 250 bar
16	=	pressure range 10 … 160 bar
10	=	pressure range 10 … 100 bar
04	=	pressure range 10 … 040 bar
10	=	nominal size 10
(blank)	=	NBR (Nitrile) seals (**standard**)
V	=	FKM (Viton) seals (special seals - please contact BUCHER)
1 ... 9	=	design stage (omit when ordering new units)
...	=	voltage e.g. **24** (24 V)
D	=	current DC
A	=	current AC
(blank)	=	DIN EN 175301-803 connection with mating plug (**standard, IP 65**)
M100	=	DIN EN 175301-803 connection without mating plug
C	=	Kostal plug connection (IP 65)
JT	=	Junior Timer radial plug connection (with protection diode, IP65)
IT	=	Junior Timer axial plug connection (with protection diode, IP65)
D	=	Deutsch plug connection DT04-2P (IP 67/69K)
DT	=	Deutsch plug connection DT04-2P (with protection diode, IP 67/69K)
S	=	AMP Superseal 1.5 (IP67) / Metri-Pack 150 (IP65) plug connection
F	=	flying leads (500 mm)

mating plug not supplied

9 Related data sheets

Reference (Old no.)	Description
400-P-040011	The form-tool hire programme
400-P-060121	Cavity type DD
400-P-120110	Coils for screw-in cartridge valves
400-P-740111	Line- and manifold-mounting body, type DDY-12 (G 1/2")

info.ch@bucherhydraulics.com www.bucherhydraulics.com

© 2019 by Bucher Hydraulics AG Frutigen, CH-3714 Frutigen
All rights reserved.
Data is provided for the purpose of product description only, and must not be construed as warranted characteristics in the legal sense. The information does not relieve users from the duty of conducting their own evaluations and tests. Because the products are subject to continual improvement, we reserve the right to amend the product specifications contained in this catalogue.

Classification: 430.305.300.305.320.300

Electrically Operated Pressure-Relief Cartridge, Size 10

Qmax = 140 l/min (37 gpm), pmax = 350 bar (5000 psi)
seated pilot stage, spool-type design, with external pilot-oil drain Z
Series WUVPOC-3…, WUVPLC-3…

- Compact construction for cavity type DD – M24x1.5 to Bucher standard
- Bypass circuit ON / OFF
- 2-pressure switching HI / LO
- Damped opening (on request)
- With external pilot-oil drain Z
- Low unloaded bypass pressure with “OC” model to 100 l/min
- High pressure wet-armature solenoids
- The slip-on coil can be rotated, and it can be replaced without opening the hydraulic envelope
- Various plug-connector systems and voltages are available
- All exposed parts with zinc-nickel plating
- Can be fitted in a line-mounting body

1 Description

Series WUVPOC-3… / WUVPLC-3… and WUVPUC-3… valves are size 10 electrically operated pressure relief cartridges with an M24x1.5 mounting thread. They have a seated pilot stage and a spool-type main stage. Using the external pressure adjustment, the higher pressure p1 (relief setting) and the lower pressure p2 (a secondary pressure, or the unloaded pressure) can be varied smoothly and independently of one another without opening the hydraulic envelope, and either pressure can be selected. The “OC” model is mainly used for bypass circuits that can be unloaded with low Δp values (ON / OFF). The lower Δp values result in less heating of the oil and thus lower energy costs for the user. The “LC” model is mainly used for 2-pressure circuits (HI / LO). The “UC” model (available on request) is fitted with a damping spool that, by ensuring a damped opening, prevents undesirable pressure spikes. When the pilot stage is active (pressure relief function), pilot oil is drained externally to port Z. Port B can therefore be pressurised without that pressure being additive to the valve pressure setting. All external parts of the cartridge are zinc-nickel plated to DIN 50 979 and are thus suitable for use in the harshest operating environments. If you intend to manufacture your own cavities or are designing a line-mounting installation, please refer to the section “Related data sheets”.

2 Symbol

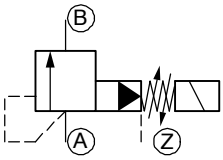

3 Technical data

General characteristics	Description, value, unit
Designation	pressure-relief cartridge valve
Design	spool-type design, seated pilot, with external pilot-oil drain Z, electrically operated
Mounting method	screw-in cartridge M24 x 1.5
Size	nominal size 10, cavity type DD to Bucher standard
Weight	0.52 kg (1.15 lb)

WWW.SUMY.IR

General characteristics	Description, value, unit	
Mounting attitude	unrestricted	
Ambient temperature range	-25 °C … +50 °C	(-13 °F … +122 °F)

Hydraulic characteristics	Description, value, unit	
Maximum operating pressure in port A and B	350 bar	(5000 psi)
Maximum allowable pressure in port Z (tank)	250 bar	(3600 psi)
Pressure adjustment range:	350 bar 250 bar 160 bar 100 bar 40 bar	(5000 psi) (3600 psi) (2300 psi) (1400 psi) (570 psi)
Maximum flow rate	140 l/min (at > 100 l/min, "LC" model recommended by the manufacturer)	(37 gpm)
Flow direction	A → B, see symbols	
Hydraulic fluid	HL and HLP mineral oil to DIN 51 524; for other fluids, please contact BUCHER	
Hydraulic fluid temperature range	-25 °C … +80 °C	(-13 °F … +176 °F)
Viscosity range	10…500 mm^2/s (cSt), recommended 15...250 mm^2/s (cSt)	
Minimum fluid cleanliness Cleanliness class to ISO 4406 : 1999	class 20/18/15	

Electrical characteristics	Description, value, unit
Supply voltage	12 V DC, 24 V DC / 115 V AC, 230 V AC (50 … 60 Hz)
Supply voltage tolerance	± 10 %
Nominal power consumption	V DC = 27 W V AC = 25 W
Relative duty cycle	100 %
Protection class to ISO 20 653 / EN 60 529	IP 65 / IP 67 / IP 69K, see “Ordering code” (with appropriate mating connector and proper fitting and sealing)
Electrical connection	DIN EN 175301-803, 3-pin 2 P+E (standard) for other connectors, see “Ordering code”

4 Performance graphs

measured with oil viscosity 33 mm^2/s (cSt)

bypass circuit (ON/OFF) – WUVPOC-…

p = f (Q) Pressure - Flow rate characteristic (350 bar)

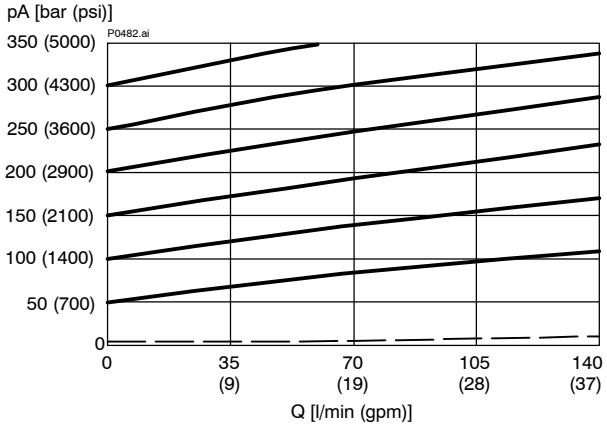

p = f (Q) Pressure - Flow rate characteristic (250 bar)

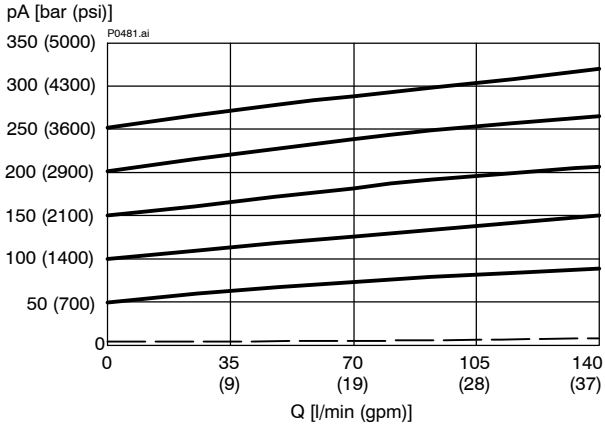

p = f (Q) Pressure - Flow rate characteristic (160 bar)

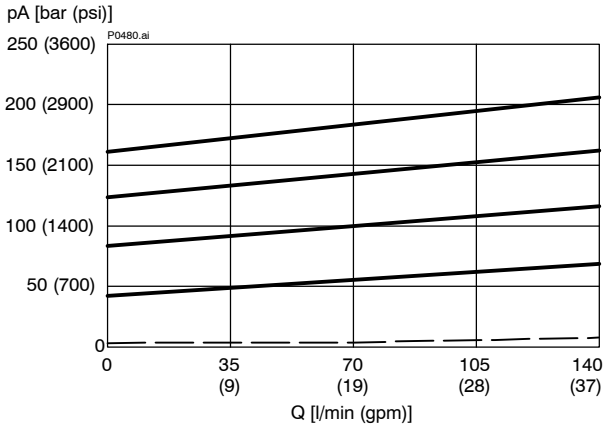

p = f (Q) Pressure - Flow rate characteristic (100 bar)

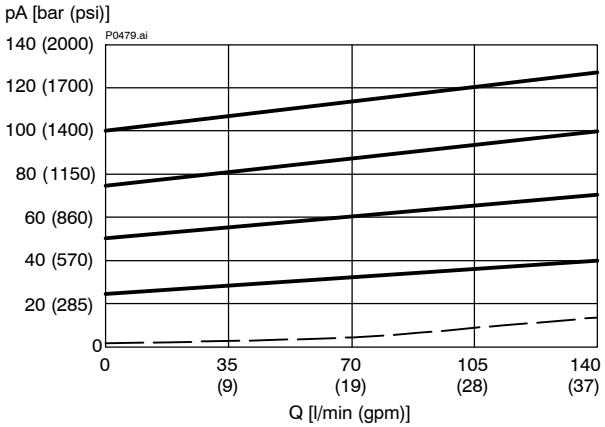

p = f (Q) Pressure - Flow rate characteristic (40 bar)

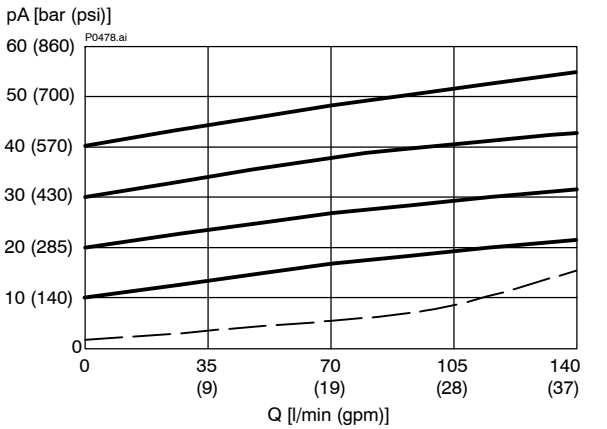

application limit / minimum bypass pressure

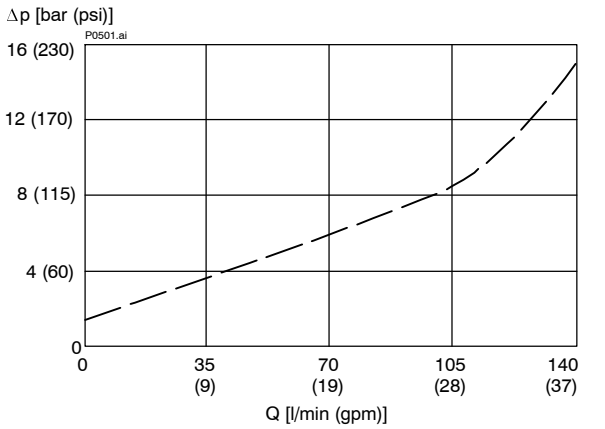

– – – – p2 min. = application limit / minimum bypass pressure

p = f (Q) Pressure - Flow rate characteristic (350 bar)

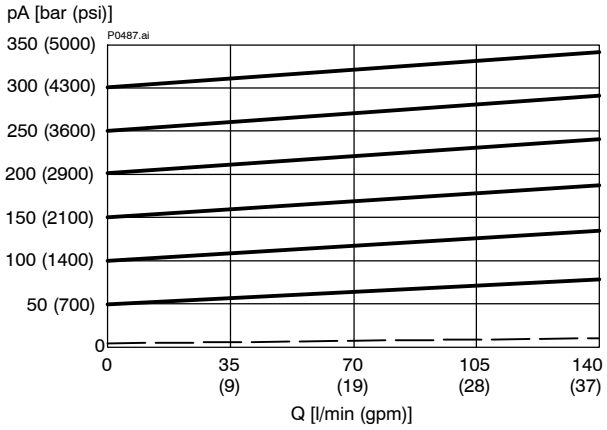

p = f (Q) Pressure - Flow rate characteristic (250 bar)

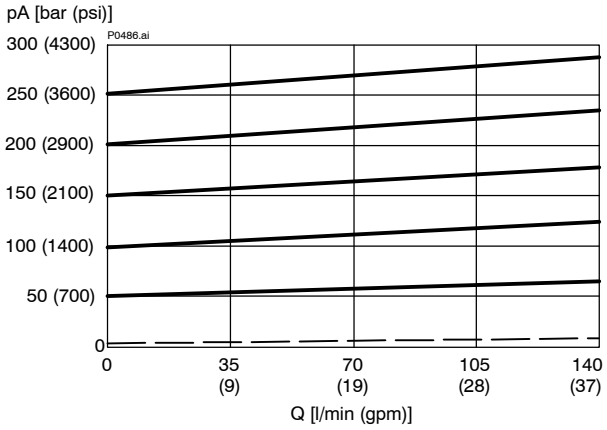

p = f (Q) Pressure - Flow rate characteristic (160 bar)

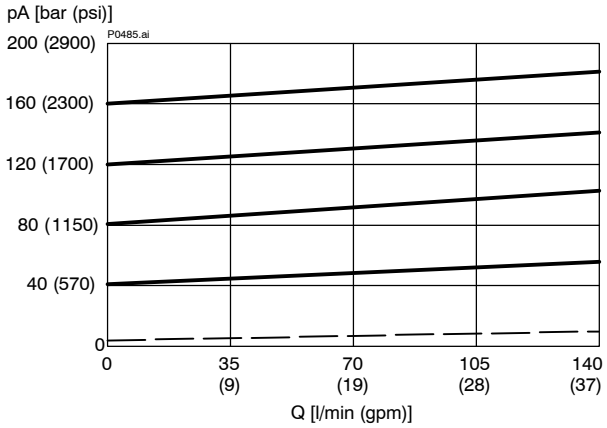

p = f (Q) Pressure - Flow rate characteristic (100 bar)

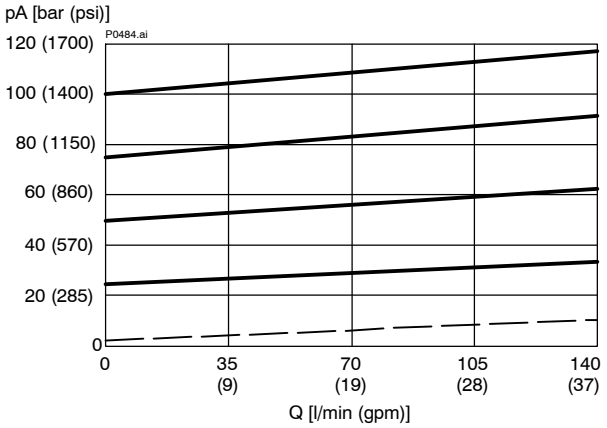

p = f (Q) Pressure - Flow rate characteristic (40 bar)

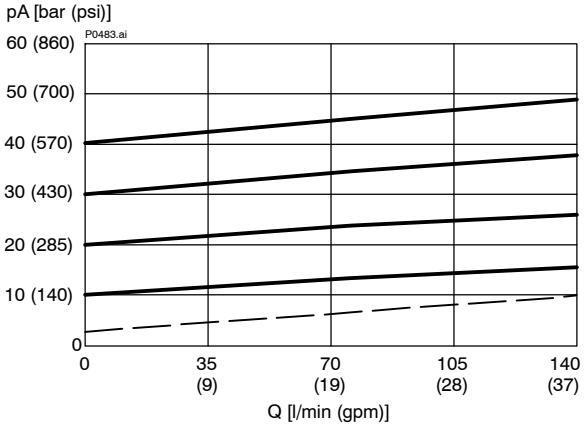

application limit / minimum bypass pressure

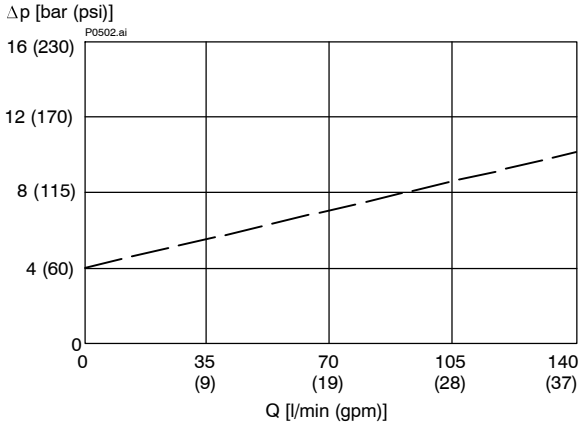

– – – – p2 min. = application limit / minimum bypass pressure

5 Dimensions & sectional view

Type WUVPOC…

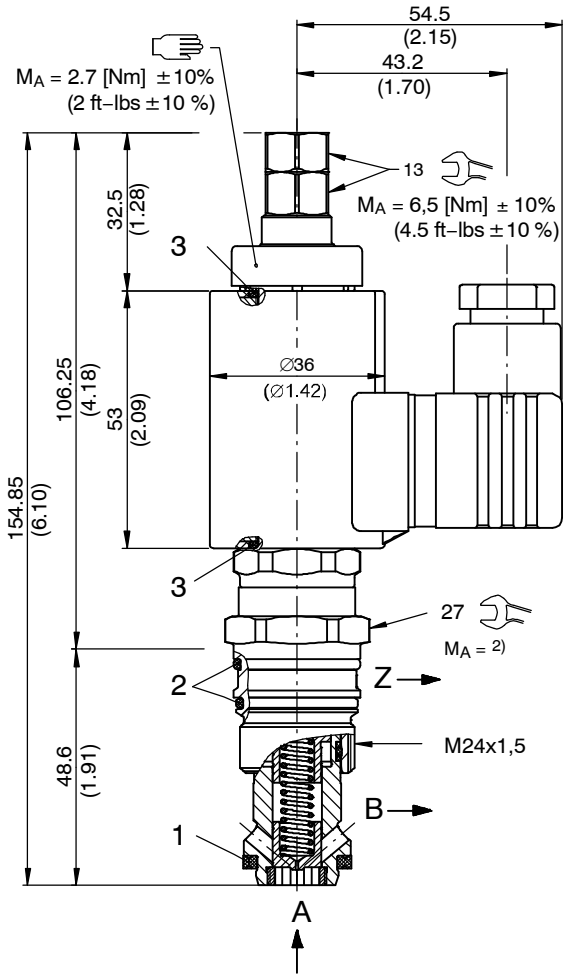

Tightening torque M_A 2) ± 10 %

Cavity type	DD	
When fitted in steel	65 [Nm]	(50 ft-lbs)
When fitted in aluminium	50 [Nm]	(35 ft-lbs)

Seal kit NBR no. DS-261-N 3)

Item	Qty.	Description		
1	1	Seal ring	∅ 22.10 / 16.50 x 2.50	
2	2	O-ring no. 020	∅ 21.95 x 1.78	N90
3	2	O-ring	∅ 16.00 x 2.00	V83

IMPORTANT!

3) Seal kit with FKM (Viton) seals, no. DS-261-V

Type WUVPLC…

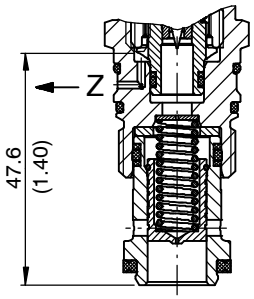

6 Installation information

IMPORTANT!
When fitting the cartridges, use the specified tightening torque.

ATTENTION!
Only qualified personnel with mechanical skills may carry out any maintenance work. Generally, the only work that should ever be undertaken is to check, and possibly replace, the seals. When changing seals, oil or grease the new seals thoroughly before fitting them.

7 Pressure adjustment

(pressure p1 must be set first, followed by pressure p2)

Nr.	Setting the higher pressure p1 on series WUVPOC… / WUVPLC… as the higher working pressure with solenoid energised:
1)	Slacken and remove cap nut item A (13 A/F).
2)	Slacken lock nut item D (13 A/F) approx. ½ turn.
3)	With pump running and with the solenoid energised, use the two flats (7 A/F) to turn adjusting screw item B until the required pressure is set in port A.
4)	Hold the adjusting screw item B using the 7 A/F flats while tightening the lock nut item D (13 A/F).
5)	Refit and tighten the cap nut item A.

Nr.	Setting the lower pressure p2 (emergency pressure setting) on series WUVPOC… / WUVPLC… (a second pressure or alternatively, unload) with solenoid de-energised:
1)	Slacken and remove cap nut item A (13 A/F).
2)	With pump running and with the solenoid de-energised, use the adjusting screw item B (2.5 A/F hex. socket) to set the pressure p2 in port A.
3)	Refit and tighten the cap nut item A. (p2 min.: 2 … 15 bar for WUVPOC, dependent on flow). (p2 min.: 4 … 10 bar for WUVPLC, dependent on flow).

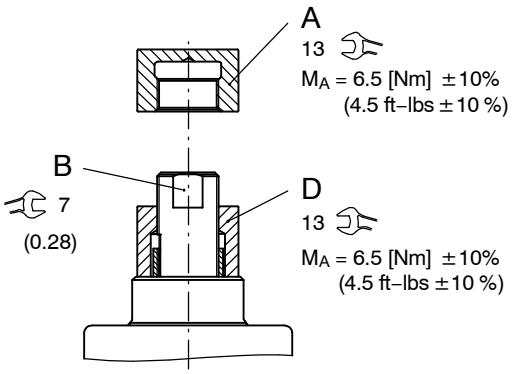

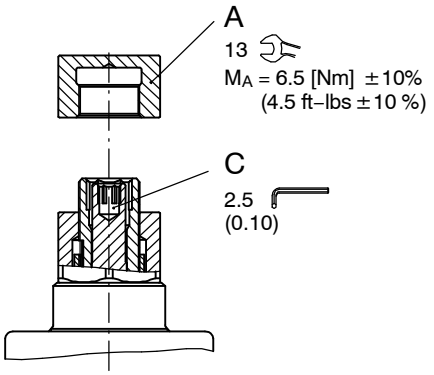

ATTENTION!
When setting pressure p1, adjusting screw item B must not be overtightened as this can damage the shoulder which limits the maximum pressure setting. As soon as a definite end-stop can be felt, do not turn any further.

Example – showing the adjustable pressures p1 and p2:

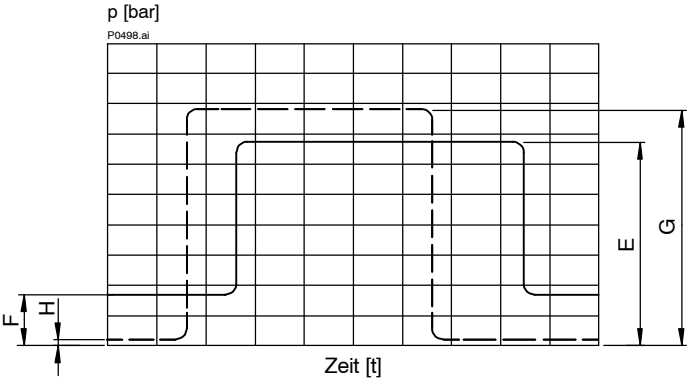

H = when item C is unscrewed until flush
E, G = pressure p1; as set with item B, solenoid energised
F = pressure p2, min. as H, max. as E and G, adjustable at item C, solenoid de-energised

Type WUVPLC…
The relief pressure p1 is set as the higher working pressure (E) (solenoid energised)
p2 as the lower working pressure (F) (solenoid de-energised)

Type WUVPOC… / (WUVPUC… available on request)
The relief pressure p1 is set as the higher working pressure (G) (solenoid energised)
p2 as the lowest unloaded bypass pressure (H) = item C flush (solenoid de-energised)

8 Ordering code

Ex. WU V P O C - 3 D O - 35 - 10 _ - 1 24 D _

WU	=	electr. operated pressure-relief valve
V	=	seated two-stage
P	=	cartridge design
O	=	for unloading duty (ON/OFF)
L	=	for two-pressure duty (HI/LO)
U	=	for unloading duty, damped opening (on request)
C ... Q	=	standard model per relevant data sheet
Y ... R	=	special features - please consult BUCHER
3	=	pressure function 3 (with external pilot-oil drain Z)
D	=	cavity type DD
O	=	normally open
35	=	pressure range 10 … 350 bar
25	=	pressure range 10 … 250 bar
16	=	pressure range 10 … 160 bar
10	=	pressure range 10 … 100 bar
04	=	pressure range 10 … 040 bar
10	=	nominal size 10
(blank)	=	NBR (Nitrile) seals (**standard**)
V	=	FKM (Viton) seals (special seals - please contact BUCHER)
1 ... 9	=	design stage (omit when ordering new units)
...	=	voltage e.g. **24** (24 V)
D	=	current DC
A	=	current AC
(blank)	=	DIN EN 175301-803 connection with mating plug (**standard, IP 65**)
M100	=	DIN EN 175301-803 connection without mating plug
C	=	Kostal plug connection (IP 65)
JT	=	Junior Timer radial plug connection (with protection diode, IP65)
IT	=	Junior Timer axial plug connection (with protection diode, IP65)
D	=	Deutsch plug connection DT04-2P (IP 67/69K)
DT	=	Deutsch plug connection DT04-2P (with protection diode, IP 67/69K)
S	=	AMP Superseal 1.5 (IP67) / Metri-Pack 150 (IP65) plug connection
F	=	flying leads (500 mm)

mating plug not supplied

9 Related data sheets

Reference (Old no.)	Description
400-P-040011	The form-tool hire programme
400-P-060121	Cavity type DD
400-P-120110	Coils for screw-in cartridge valves
400-P-740111	Line- and manifold-mounting body, type DDY-12 (G 1/2")

info.ch@bucherhydraulics.com www.bucherhydraulics.com

© 2018 by Bucher Hydraulics AG Frutigen, CH-3714 Frutigen
All rights reserved.
Data is provided for the purpose of product description only, and must not be construed as warranted characteristics in the legal sense. The information does not relieve users from the duty of conducting their own evaluations and tests. Because the products are subject to continual improvement, we reserve the right to amend the product specifications contained in this catalogue.

Classification: 430.305.300.305.320.300

Electrically Operated Pressure-Relief Cartridge, Size 16

Q_{max} = 350 l/min (92 gpm), p_{max} = 420 bar (6000 psi)
seated pilot stage, spool-type design, electrically operated
Series WUVPB-1…

- Compact construction for cavity type EB – M42x2 to ISO 7789-42-06-0-07
- Bypass circuit ON / OFF
- 2-pressure switching HI / LO
- With internal pilot-oil drain to 2
- High pressure wet-armature solenoids
- The slip-on coil can be rotated, and it can be replaced without opening the hydraulic envelope
- Various plug-connector systems and voltages are available
- All exposed parts with zinc-nickel plating
- Can be fitted in a line-mounting body

1 Description

Series WUVPB-1… valves are size 16 electrically operated pressure relief cartridges with an M42x2 mounting thread. They have a seated pilot stage and a spool-type main stage. Using the external pressure adjustment, the higher pressure p1 (relief setting) and the lower pressure p2 (a secondary pressure, or the unloaded pressure) can be varied smoothly and independently of one another without opening the hydraulic envelope, and either pressure can be selected. When the pilot stage is active (pressure relief function), pilot oil is drained internally to port 2. Any pressure at port 2 is additive to the valve setting, therefore port 2 should preferably be routed directly to tank. All external parts of the cartridge are zinc-nickel plated to DIN 50 979 and are thus suitable for use in the harshest operating environments. The slip-on coils can be replaced without opening the hydraulic envelope and can be positioned at any angle through 360°. If you intend to manufacture your own cavities or are designing a line-mounting installation, please refer to the section “Related data sheets”.

2 Symbol

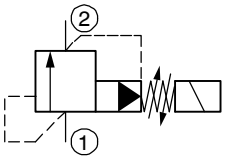

3 Technical data

General characteristics	Description, value, unit	
Designation	pressure-relief cartridge valve	
Design	spool-type design, seated pilot, electrically operated	
Mounting method	screw-in cartridge M42 x 2	
Tightening torque	200 Nm ± 10 %	(150 ft-lbs ± 10 %)
Size	nominal size 16, cavity type EB to ISO 7789-42-06-0-07	
Weight	1.25 kg	(2.75 lb)
Mounting attitude	unrestricted	
Ambient temperature range	-25 °C … +50 °C	(-13 °F … +122 °F)

Hydraulic characteristics		Description, value, unit	
Maximum operating pressure	- main port 1 [1)] - port 2 (tank)	420 bar 250 bar	(6000 psi) (3600 psi)
Pressure adjustment range:		420 bar 350 bar 250 bar 160 bar 100 bar 40 bar	(6000 psi) (5000 psi) (3600 psi) (2300 psi) (1400 psi) (570 psi)
Maximum flow rate		350 l/min	(92 gpm)
Flow direction		1 → 2, see symbols	
Hydraulic fluid		HL and HLP mineral oil to DIN 51 524; for other fluids, please contact BUCHER	
Hydraulic fluid temperature range		-25 °C … +80 °C	(-13 °F … +176 °F)
Viscosity range		10…500 mm^2/s (cSt), recommended 15...250 mm^2/s (cSt)	
Minimum fluid cleanliness Cleanliness class to ISO 4406 : 1999		class 20/18/15	

Electrical characteristics	Description, value, unit
Supply voltage	12 V DC, 24 V DC / 115 V AC, 230 V AC (50 … 60 Hz)
Supply voltage tolerance	± 10 %
Nominal power consumption	V DC = 27 W V AC = 25 W
Switching time	50 … 300 ms (energising) … ≤ 30 ms (de-energising) Depending on pressure, flow rate and viscosity as well as dwell time under pressure, the switching times may vary from the the stated values.
Relative duty cycle	100 %
Protection class to ISO 20 653 / EN 60 529	IP 65 / IP 67 / IP 69K, see “Ordering code” (with appropriate mating connector and proper fitting and sealing)
Electrical connection	DIN EN 175301-803, 3-pin 2 P+E (standard) for other connectors, see “Ordering code”

ATTENTION!
[1)] Any residual- or surge-pressure in port 2 (tank pressure) is additive to the pressure setting in port 1.

4 Performance graphs measured with oil viscosity 33 mm^2/s (cSt)

Q_L = f (p) Leakage flow rate characteristic (1 → 2)
Q [cm^3/min (in^3/min)]

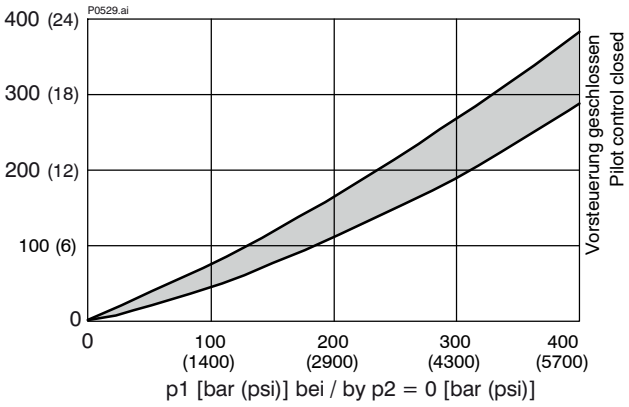

Δp = f (Q) Pressure-drop characteristic (420 bar)

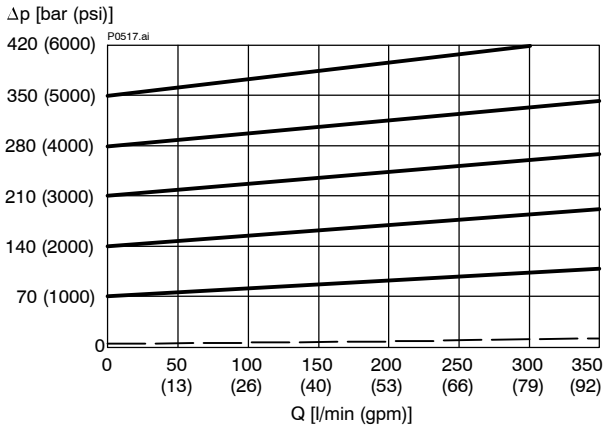

Δp = f (Q) Pressure-drop characteristic (350 bar)

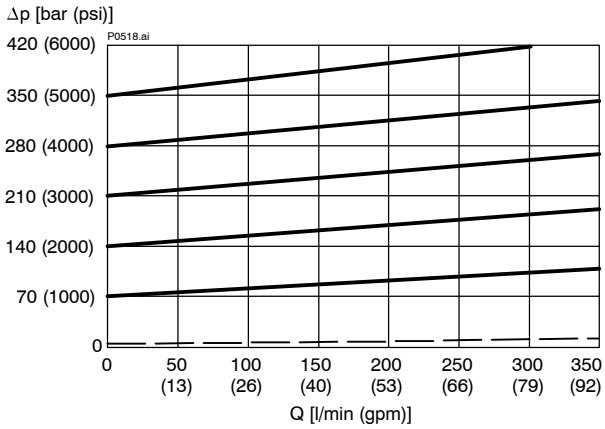

Δp = f (Q) Pressure-drop characteristic (250 bar)

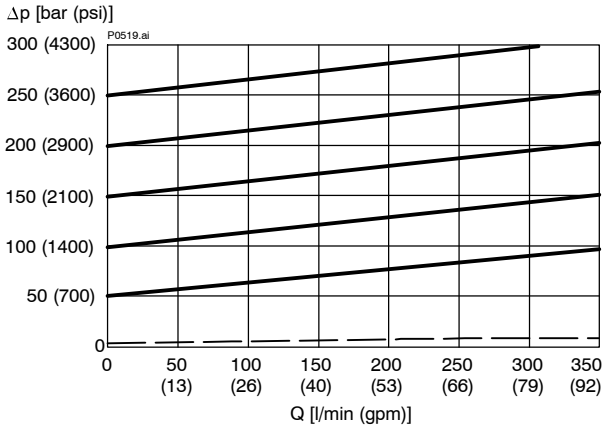

Δp = f (Q) Pressure-drop characteristic (160 bar)

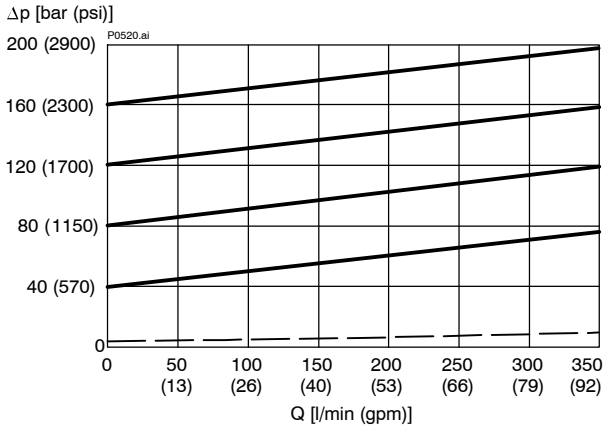

Δp = f (Q) Pressure-drop characteristic (100 bar)

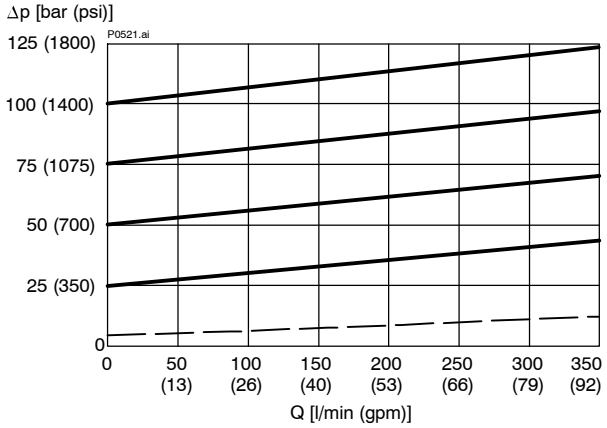

Δp = f (Q) Pressure-drop characteristic (40 bar)

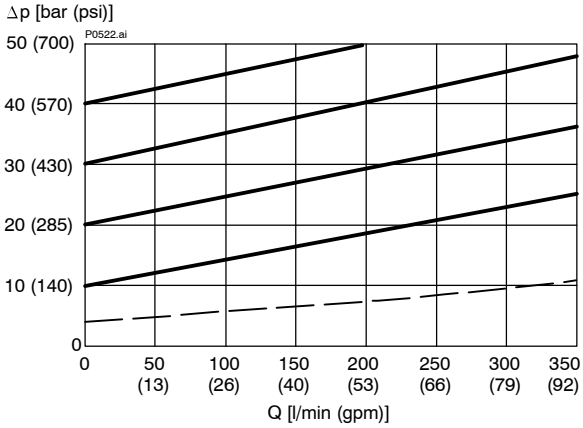

5 Dimensions & sectional view

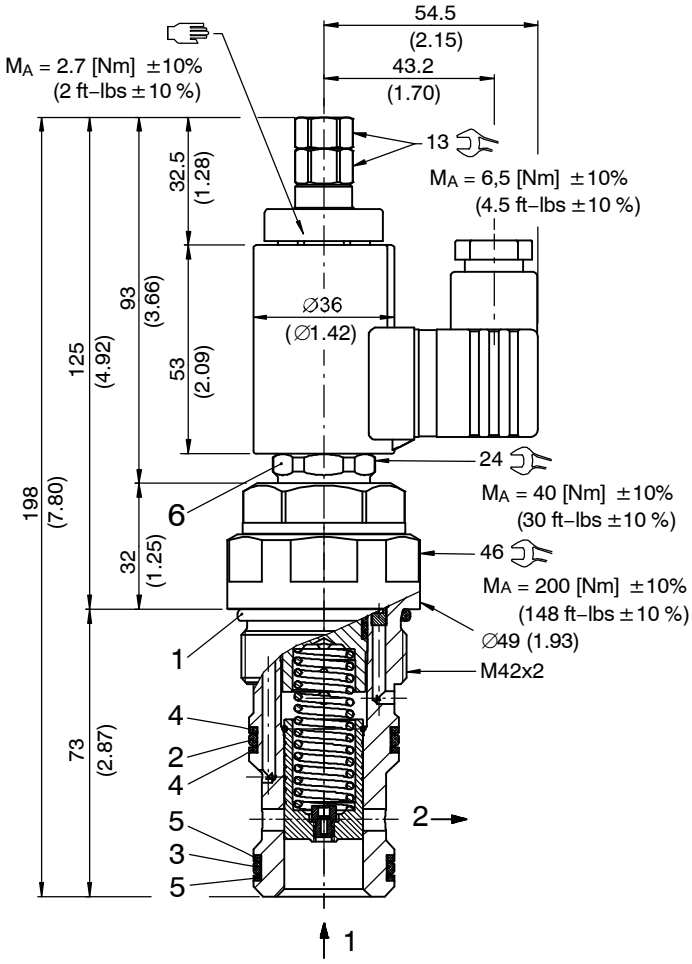

Seal kit NBR no. DS-357-N [2)]

Item	Qty.	Description
1	1	O-ring no. 129 ∅ 39.34 x 2.62 N90
2	1	O-ring no. 125 ∅ 32.99 x 2.62 N90
3	1	O-ring no. 124 ∅ 31.42 x 2.62 N90
4	2	Backup ring ∅ 32.00 x 2.00 x 1.40 FI0751
5	2	Backup ring ∅ 30.00 x 2.00 x 1.40 FI0751
6	1	Seal kit NBR DS-317-N

IMPORTANT!

2) Seal kit with FKM (Viton) seals, no. DS-357-V

6 Installation information

IMPORTANT!
When fitting the cartridges, use the specified tightening torque.

ATTENTION!
Only qualified personnel with mechanical skills may carry out any maintenance work. Generally, the only work that should ever be undertaken is to check, and possibly replace, the seals. When changing seals, oil or grease the new seals thoroughly before fitting them.

7 Pressure adjustment

(pressure p1 must be set first, followed by pressure p2)

Nr.	Setting the higher pressure p1 on series WUVB… as the higher working pressure with solenoid energised:
1)	Slacken and remove cap nut item A (13 A/F).
2)	Slacken lock nut item D (13 A/F) approx. ½ turn.
3)	With pump running and with the solenoid energised, use the two flats (7 A/F) to turn adjusting screw item B until the required pressure is set in port 1.
4)	Hold the adjusting screw item B using the 7 A/F flats while tightening the lock nut item D (13 A/F).
5)	Refit and tighten the cap nut item A.

Nr.	Setting the lower pressure p2 (emergency pressure setting) on series WUVB… (a second pressure or alternatively, unload) with solenoid de-energised:
1)	Slacken and remove cap nut item A (13 A/F).
2)	With pump running and with the solenoid de-energised, use the adjusting screw item C (2.5 A/F hex. socket) to set the pressure p2 in port 1.
3)	Refit and tighten the cap nut item A. (p2 min.: 2 … 10 bar, dependent on flow).

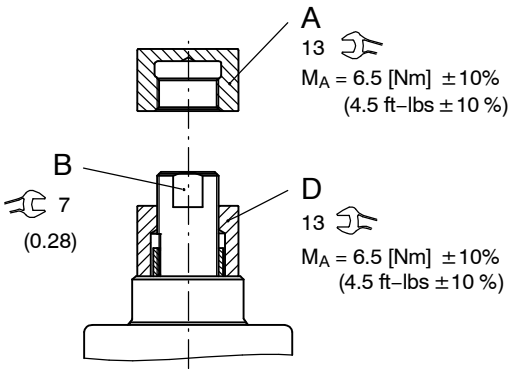

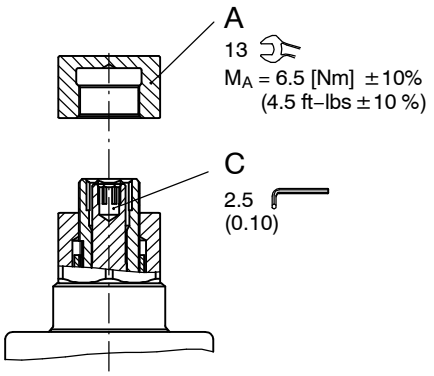

ATTENTION!
When setting pressure p1, adjusting screw item B must not be overtightened as this can damage the shoulder which limits the maximum pressure setting. As soon as a definite end-stop can be felt, do not turn any further.

Example – showing the adjustable pressures p1 and p2:

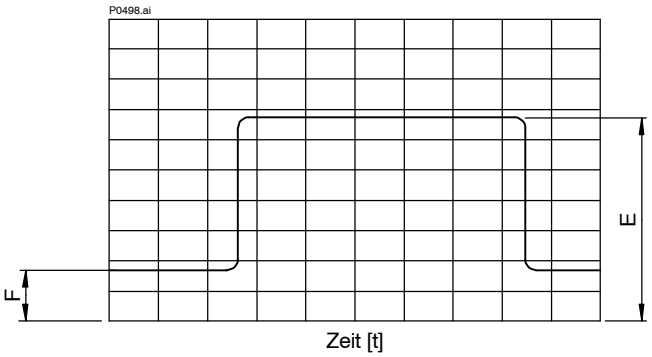

E = pressure p1; as set with item B, solenoid energised
F = pressure p2, max. as E, adjustable at item C, solenoid de-energised

---

The relief pressure p1 is set as the higher working pressure (E) (solenoid energised)
p2 as the lower working pressure (F) (solenoid de-energised)

8 Ordering code

Ex. WU V P B - 1 B O - 42 - 16 _ - 1 24 D _

WU	=	electr. operated pressure-relief valve
V	=	two-stage
P	=	cartridge design
B ... Q	=	standard model per relevant data sheet
Y ... R	=	special features - please consult BUCHER
1	=	pressure function 1 (pressure-relief)
B	=	cavity type EB
O	=	normally open
42	=	pressure range 10 … 420 bar
35	=	pressure range 10 … 350 bar
25	=	pressure range 10 … 250 bar
16	=	pressure range 10 … 160 bar
10	=	pressure range 10 … 100 bar
04	=	pressure range 10 … 040 bar
16	=	nominal size 16
(blank)	=	NBR (Nitrile) seals (**standard**)
V	=	FKM (Viton) seals (special seals - please contact BUCHER)
1 ... 9	=	design stage (omit when ordering new units)
...	=	voltage e.g. **24** (24 V)
D	=	current DC
A	=	current AC
(blank)	=	DIN EN 175301-803 connection with mating plug (**standard, IP 65**)
M100	=	DIN EN 175301-803 connection without mating plug
C	=	Kostal plug connection (IP 65)
JT	=	Junior Timer radial plug connection (with protection diode, IP65)
IT	=	Junior Timer axial plug connection (with protection diode, IP65)
D	=	Deutsch plug connection 45° DT04-2P (IP67/69K)
DT	=	Deutsch plug connection 45° DT04-2P (with protection diode, IP67/69K)
S	=	AMP Superseal 1.5 (IP67) / Metri-Pack 150 (IP65) plug connection
F	=	flying leads (500 mm)

mating plug not supplied

9 Related data sheets

Reference	Description
400-P-040011	The form-tool hire programme
400-P-080111	Cavity type EB
400-P-120110	Coils for screw-in cartridge valves
400-P-287101	Electrically Operated Pressure-Relief Cartridge, Size 1, type WUVB-1
400-P-309101	Stack mounting pressure-relief valve, ISO Size 07, type SWUVPB-1
400-P-750115	Line- and manifold-mounting body, type GEBAA (M42x2)

info.ch@bucherhydraulics.com www.bucherhydraulics.com

© 2019 by Bucher Hydraulics AG Frutigen, CH-3714 Frutigen
All rights reserved.
Data is provided for the purpose of product description only, and must not be construed as warranted characteristics in the legal sense. The information does not relieve users from the duty of conducting their own evaluations and tests. Because the products are subject to continual improvement, we reserve the right to amend the product specifications contained in this catalogue.

Classification: 430.305.300.305.330.300

Electrically Operated Pressure-Relief Cartridge, Size 16

Q_{max} = 350 l/min (92 gpm), p_{max} = 420 bar (6000 psi)
seated pilot stage, spool-type design, electrically operated
Series WUVPB-2…

- Compact construction for cavity type EB – M42x2 to ISO 7789-42-06-0-07
- Bypass circuit ON / OFF
- 2-pressure switching HI / LO
- With internal remote-control port 2
- With remote-control port 3
- High pressure wet-armature solenoids
- The slip-on coil can be rotated, and it can be replaced without opening the hydraulic envelope
- Various plug-connector systems and voltages are available
- All exposed parts with zinc-nickel plating
- Can be fitted in a line-mounting body

1 Description

Series WUVPB-2… valves are size 16 electrically operated pressure relief cartridges with an M42x2 mounting thread. They have a seated pilot stage and a spool-type main stage. Using the external pressure adjustment, the higher pressure p1 (relief setting) and the lower pressure p2 (a secondary pressure, or the unloaded pressure) can be varied smoothly and independently of one another without opening the hydraulic envelope, and either pressure can be selected. Using the remote-control port 3, these valves can also be remotely controlled or unloaded by means of external pressure relief valves or directional valves. When the pilot stage is active (pressure relief function), pilot oil is drained internally to port 2. Any residual- or surge-pressure in port 2 (Tank) is therefore additive to the valve setting. All external parts of the cartridge are zinc-nickel plated to DIN 50 979 and are thus suitable for use in the harshest operating environments. The slip-on coils can be replaced without opening the hydraulic envelope and can be positioned at any angle through 360°. If you intend to manufacture your own cavities or are designing a line-mounting installation, please refer to the section “Related data sheets”.

2 Symbol

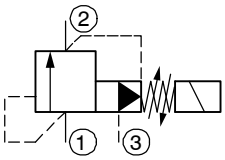

3 Technical data

General characteristics	Description, value, unit	
Designation	pressure-relief cartridge valve	
Design	spool-type design, seated pilot, electrically operated, with remote control port 3	
Mounting method	screw-in cartridge M42 x 2	
Tightening torque	200 Nm ± 10 %	(150 ft-lbs ± 10 %)
Size	nominal size 16, cavity type EB to ISO 7789-42-06-0-07	
Weight	1.25 kg	(2.75 lb)
Mounting attitude	unrestricted	
Ambient temperature range	-25 °C … +50 °C	(-13 °F … +122 °F)

Hydraulic characteristics		Description, value, unit	
Maximum operating pressure	- main port 1 [1)] - port 2 (tank)	420 bar 250 bar	(6000 psi) (3600 psi)
Pressure adjustment range:		420 bar 350 bar 250 bar 160 bar 100 bar 40 bar	(6000 psi) (5000 psi) (3600 psi) (2300 psi) (1400 psi) (570 psi)
Maximum flow rate		350 l/min	(92 gpm)
Flow direction		1 → 2, see symbols	
Hydraulic fluid		HL and HLP mineral oil to DIN 51 524; for other fluids, please contact BUCHER	
Hydraulic fluid temperature range		-25 °C … +80 °C	(-13 °F … +176 °F)
Viscosity range		10…500 mm^2/s (cSt), recommended 15...250 mm^2/s (cSt)	
Minimum fluid cleanliness Cleanliness class to ISO 4406 : 1999		class 20/18/15	

Electrical characteristics	Description, value, unit
Supply voltage	12 V DC, 24 V DC / 115 V AC, 230 V AC (50 … 60 Hz)
Supply voltage tolerance	± 10 %
Nominal power consumption	V DC = 27 W V AC = 25 W
Switching time	50 … 300 ms (energising) … ≤ 30 ms (de-energising) Depending on pressure, flow rate and viscosity as well as dwell time under pressure, the switching times may vary from the the stated values.
Relative duty cycle	100 %
Protection class to ISO 20 653 / EN 60 529	IP 65 / IP 67 / IP 69K, see “Ordering code” (with appropriate mating connector and proper fitting and sealing)
Electrical connection	DIN EN 175301-803, 3-pin 2 P+E (standard) for other connectors, see “Ordering code”

ATTENTION!
[1)] Any residual- or surge-pressure in port 2 (tank pressure) is additive to the pressure setting in port 1.

4 Performance graphs measured with oil viscosity 33 mm^2/s (cSt)

Q_L = f (p) Leakage flow rate characteristic

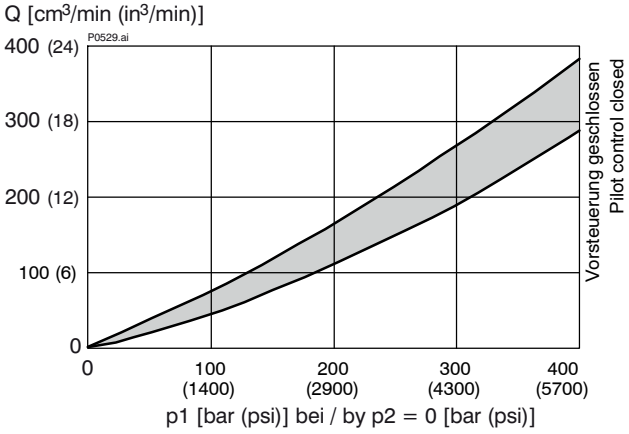

Δp = f (Q) Pressure-drop characteristic (420 bar)

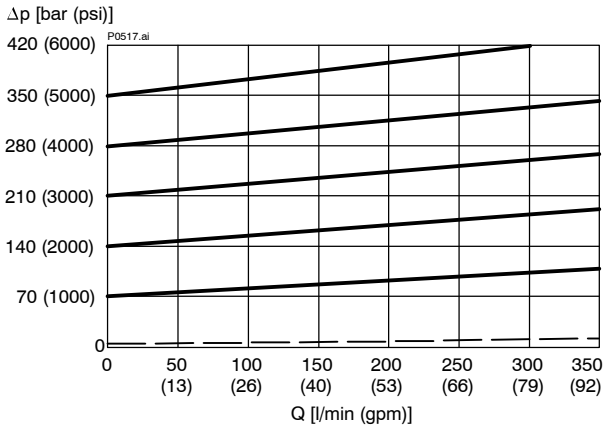

Δp = f (Q) Pressure-drop characteristic (350 bar)

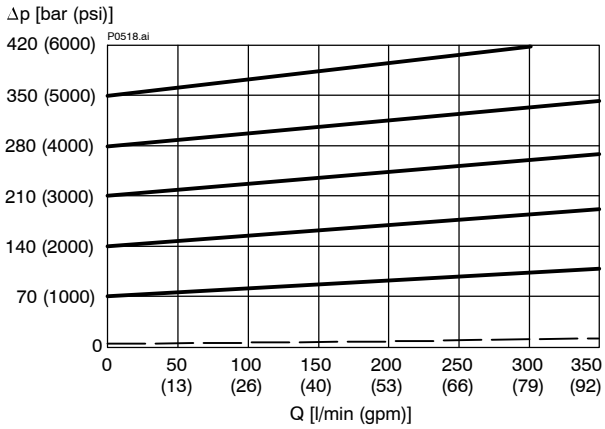

Δp = f (Q) Pressure-drop characteristic (250 bar)

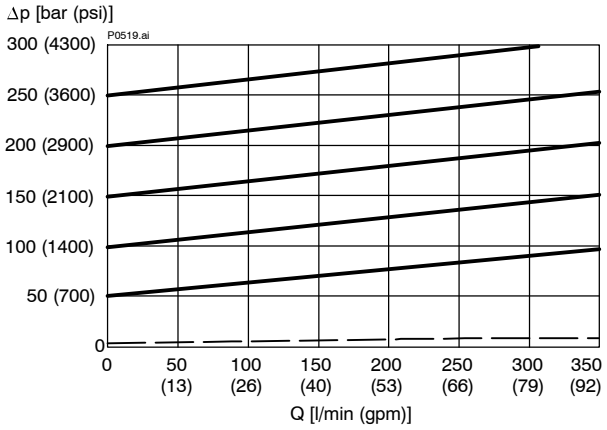

Δp = f (Q) Pressure-drop characteristic (160 bar)

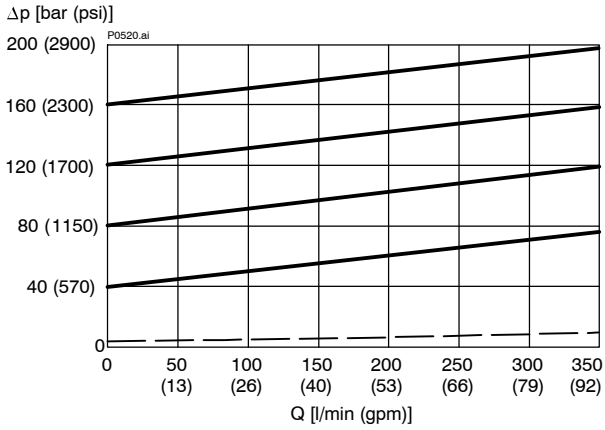

Δp = f (Q) Pressure-drop characteristic (100 bar)

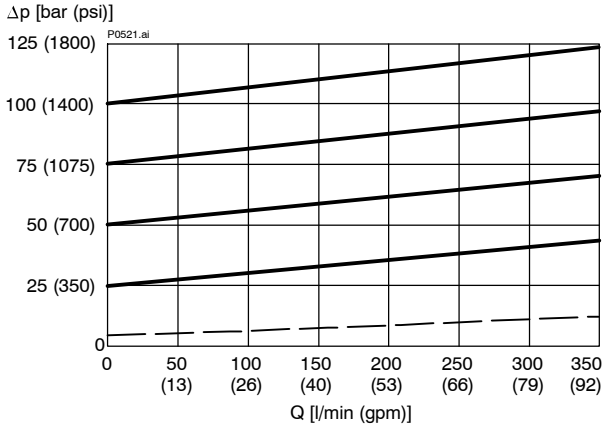

Δp = f (Q) Pressure-drop characteristic (40 bar)

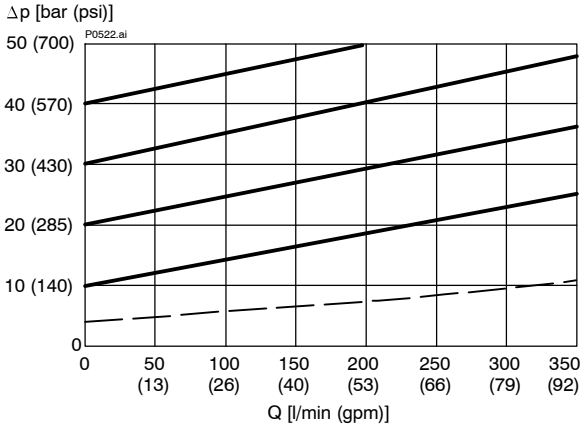

5 Dimensions & sectional view

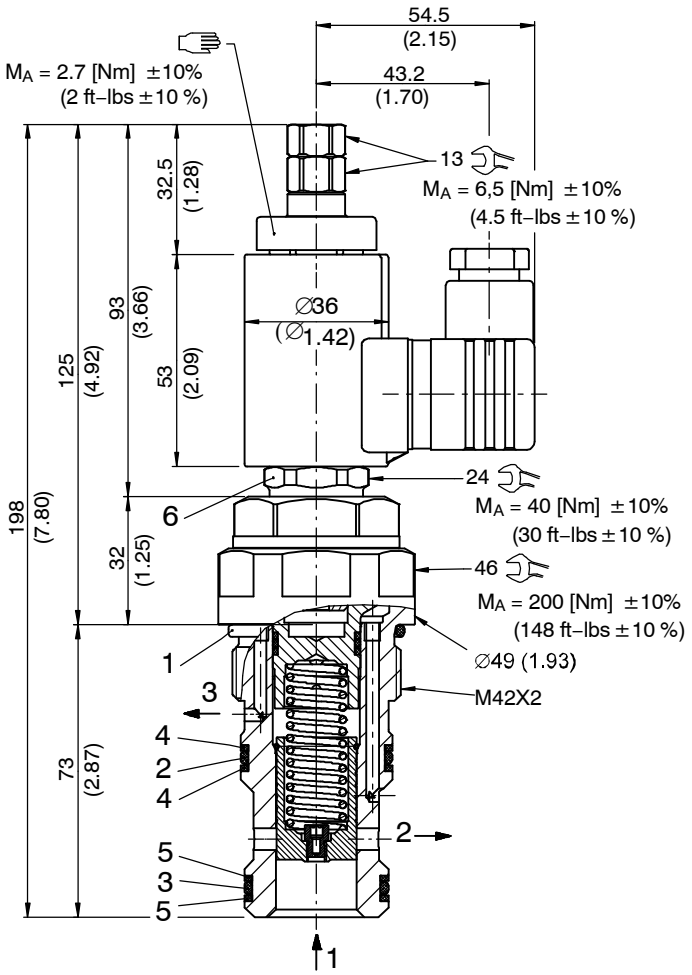

Seal kit NBR no. DS-357-N [2)]

Item	Qty.	Description
1	1	O-ring no. 129 ∅ 39.34 x 2.62 N90
2	1	O-ring no. 125 ∅ 32.99 x 2.62 N90
3	1	O-ring no. 124 ∅ 31.42 x 2.62 N90
4	2	Backup ring ∅ 32.00 x 2.00 x 1.40 FI0751
5	2	Backup ring ∅ 30.00 x 2.00 x 1.40 FI0751
6	1	Seal kit NBR DS-317-N

IMPORTANT!

2) Seal kit with FKM (Viton) seals, no. DS-357-V

6 Installation information

IMPORTANT!
When fitting the cartridges, use the specified tightening torque.

ATTENTION!
Only qualified personnel with mechanical skills may carry out any maintenance work. Generally, the only work that should ever be undertaken is to check, and possibly replace, the seals. When changing seals, oil or grease the new seals thoroughly before fitting them.

7 Pressure adjustment

(pressure p1 must be set first, followed by pressure p2)

Nr.	Setting the higher pressure p1 on series WUVB… as the higher working pressure with solenoid energised:
1)	Slacken and remove cap nut item A (13 A/F).
2)	Slacken lock nut item D (13 A/F) approx. ½ turn.
3)	With pump running and with the solenoid energised, use the two flats (7 A/F) to turn adjusting screw item B until the required pressure is set in port 1.
4)	Hold the adjusting screw item B using the 7 A/F flats while tightening the lock nut item D (13 A/F).
5)	Refit and tighten the cap nut item A.

Nr.	Setting the lower pressure p2 (emergency pressure setting) on series WUVB… (a second pressure or alternatively, unload) with solenoid de-energised:
1)	Slacken and remove cap nut item A (13 A/F).
2)	With pump running and with the solenoid de-energised, use the adjusting screw item C (2.5 A/F hex. socket) to set the pressure p2 in port 1.
3)	Refit and tighten the cap nut item A. (p2 min.: 2 … 10 bar, dependent on flow).

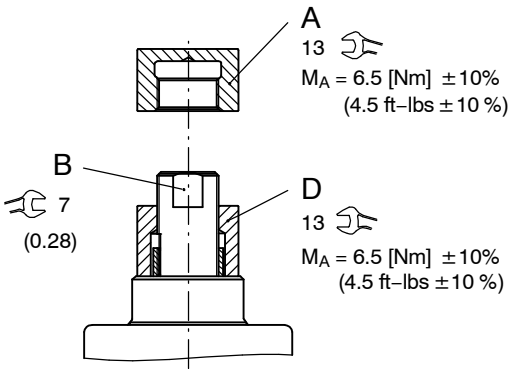

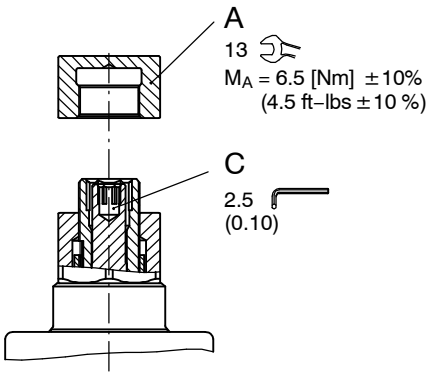

ATTENTION!
When setting pressure p1, adjusting screw item B must not be overtightened as this can damage the shoulder which limits the maximum pressure setting. As soon as a definite end-stop can be felt, do not turn any further.

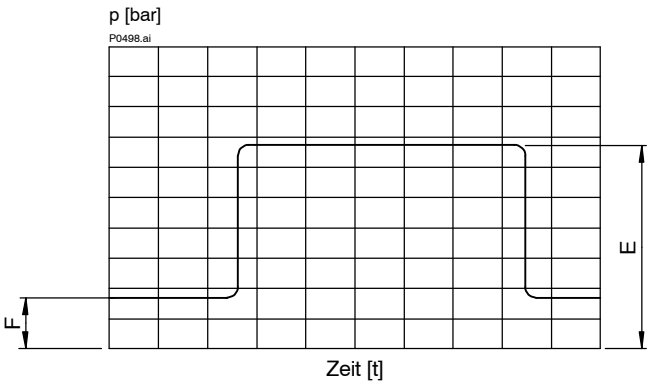

Example – showing the adjustable pressures p1 and p2:

E = pressure p1; as set with item B, solenoid energised
F = pressure p2, max. as E, adjustable at item C, solenoid de-energised

---

The relief pressure p1 is set as the higher working pressure (E) (solenoid energised)
p2 as the lower working pressure (F) (solenoid de-energised)

8 Ordering code

Ex. WU V P B - 2 B O - 42 - 16 _ - 1 24 D _

WU	=	electr. operated pressure-relief valve
V	=	two-stage
P	=	cartridge design
B ... Q	=	standard model per relevant data sheet
Y ... R	=	special features - please consult BUCHER
2	=	pressure function 2 (internal pilot drain to port 2 with remote control port 3)
B	=	cavity type EB
O	=	normally open
42	=	pressure range 10 … 420 bar
35	=	pressure range 10 … 350 bar
25	=	pressure range 10 … 250 bar
16	=	pressure range 10 … 160 bar
10	=	pressure range 10 … 100 bar
04	=	pressure range 10 … 040 bar
16	=	nominal size 16
(blank)	=	NBR (Nitrile) seals (**standard**)
V	=	FKM (Viton) seals (special seals - please contact BUCHER)
1 ... 9	=	design stage (omit when ordering new units)
...	=	voltage e.g. **24** (24 V)
D	=	current DC
A	=	current AC
(blank)	=	DIN EN 175301-803 connection with mating plug (**standard, IP 65**)
M100	=	DIN EN 175301-803 connection without mating plug
C	=	Kostal plug connection (IP 65)
JT	=	Junior Timer radial plug connection (with protection diode, IP65)
IT	=	Junior Timer axial plug connection (with protection diode, IP65)
D	=	Deutsch plug connection 45° DT04-2P (IP67/69K)
DT	=	Deutsch plug connection 45° DT04-2P (with protection diode, IP67/69K)
S	=	AMP Superseal 1.5 (IP67) / Metri-Pack 150 (IP65) plug connection
F	=	flying leads (500 mm)

mating plug not supplied

9 Related data sheets

Reference	Description
400-P-040011	The form-tool hire programme
400-P-080111	Cavity type EB
400-P-120110	Coils for screw-in cartridge valves
400-P-287101	Electrically Operated Pressure-Relief Cartridge, Size 1, type WUVB-1
400-P-309101	Stack mounting pressure-relief valve, ISO Size 07, type SWUVPB-2
400-P-750115	Line- and manifold-mounting body, type GEBAA (M42x2)

info.ch@bucherhydraulics.com www.bucherhydraulics.com

© 2019 by Bucher Hydraulics AG Frutigen, CH-3714 Frutigen
All rights reserved.
Data is provided for the purpose of product description only, and must not be construed as warranted characteristics in the legal sense. The information does not relieve users from the duty of conducting their own evaluations and tests. Because the products are subject to continual improvement, we reserve the right to amend the product specifications contained in this catalogue.

Classification: 430.305.300.305.330.300

Electrically Operated Pressure-Relief Cartridge, Size 16

Q_{max} = 350 l/min (92 gpm), p_{max} = 420 bar (6000 psi)
seated pilot stage, spool-type design, with external pilot-oil drain 3
Series WUVPB-3…

- Compact construction for cavity type EB – M42x2 to ISO 7789-42-06-0-07
- Bypass circuit ON / OFF
- 2-pressure switching HI / LO
- With external pilot-oil drain 3
- High pressure wet-armature solenoids
- The slip-on coil can be rotated, and it can be replaced without opening the hydraulic envelope
- Various plug-connector systems and voltages are available
- All exposed parts with zinc-nickel plating
- Can be fitted in a line-mounting body

1 Description

Series WUVPB-3… valves are size 16 electrically operated pressure relief cartridges with an M42x2 mounting thread. They have a seated pilot stage and a spool-type main stage. Using the external pressure adjustment, the higher pressure p1 (relief setting) and the lower pressure p2 (a secondary pressure, or the unloaded pressure) can be varied smoothly and independently of one another without opening the hydraulic envelope, and either pressure can be selected. When the pilot stage is active (pressure relief function), pilot oil is drained externally to port 3. Port 2 can therefore be pressurised without that pressure being additive to the valve pressure setting. All external parts of the cartridge are zinc-nickel plated to DIN 50 979 and are thus suitable for use in the harshest operating environments. The slip-on coils can be replaced without opening the hydraulic envelope and can be positioned at any angle through 360°. If you intend to manufacture your own cavities or are designing a line-mounting installation, please refer to the section “Related data sheets”.

2 Symbol

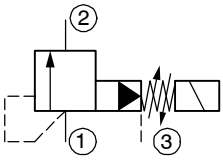

3 Technical data

General characteristics	Description, value, unit	
Designation	pressure-relief cartridge valve	
Design	spool-type design, seated pilot, electrically operated, with external pilot-oil drain to 3	
Mounting method	screw-in cartridge M42 x 2	
Tightening torque	200 Nm ± 10 %	(150 ft-lbs ± 10 %)
Size	nominal size 16, cavity type EB to ISO 7789-42-06-0-07	
Weight	1.25 kg	(2.75 lb)
Mounting attitude	unrestricted	
Ambient temperature range	-25 °C … +50 °C	(-13 °F … +122 °F)

Hydraulic characteristics		Description, value, unit	
Maximum operating pressure	- main port 1 [1)] - port 2 (tank)	420 bar 250 bar	(6000 psi) (3600 psi)
Pressure adjustment range:		420 bar 350 bar 250 bar 160 bar 100 bar 40 bar	(6000 psi) (5000 psi) (3600 psi) (2300 psi) (1400 psi) (570 psi)
Maximum flow rate		350 l/min	(92 gpm)
Flow direction		1 → 2, see symbols	
Hydraulic fluid		HL and HLP mineral oil to DIN 51 524; for other fluids, please contact BUCHER	
Hydraulic fluid temperature range		-25 °C … +80 °C	(-13 °F … +176 °F)
Viscosity range		10…500 mm^2/s (cSt), recommended 15...250 mm^2/s (cSt)	
Minimum fluid cleanliness Cleanliness class to ISO 4406 : 1999		class 20/18/15	

Electrical characteristics	Description, value, unit
Supply voltage	12 V DC, 24 V DC / 115 V AC, 230 V AC (50 … 60 Hz)
Supply voltage tolerance	± 10 %
Nominal power consumption	V DC = 27 W V AC = 25 W
Switching time	50 … 300 ms (energising) … ≤ 30 ms (de-energising) Depending on pressure, flow rate and viscosity as well as dwell time under pressure, the switching times may vary from the the stated values.
Relative duty cycle	100 %
Protection class to ISO 20 653 / EN 60 529	IP 65 / IP 67 / IP 69K, see “Ordering code” (with appropriate mating connector and proper fitting and sealing)
Electrical connection	DIN EN 175301-803, 3-pin 2 P+E (standard) for other connectors, see “Ordering code”

ATTENTION!
1) Any residual- or surge-pressure in port 2 (tank pressure) is additive to the pressure setting in port 1.

4 Performance graphs measured with oil viscosity 33 mm^2/s (cSt)

Q_L = f (p) Leakage flow rate characteristic

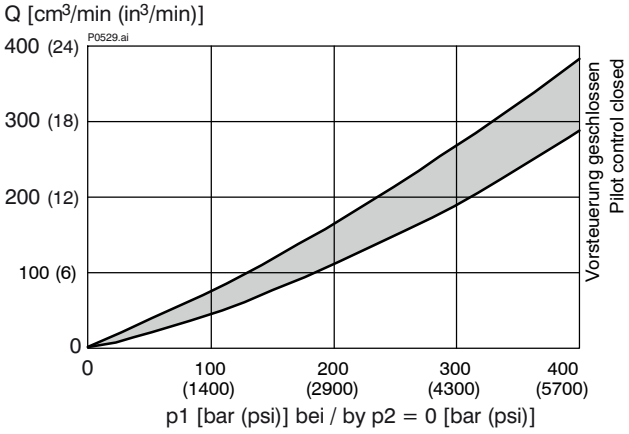

Δp = f (Q) Pressure-drop characteristic (420 bar)

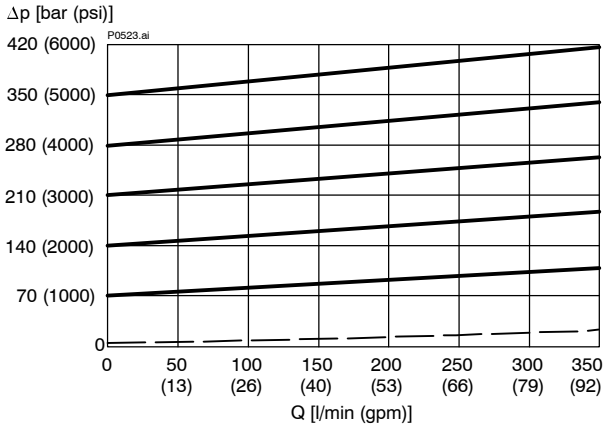

Δp = f (Q) Pressure-drop characteristic (350 bar)

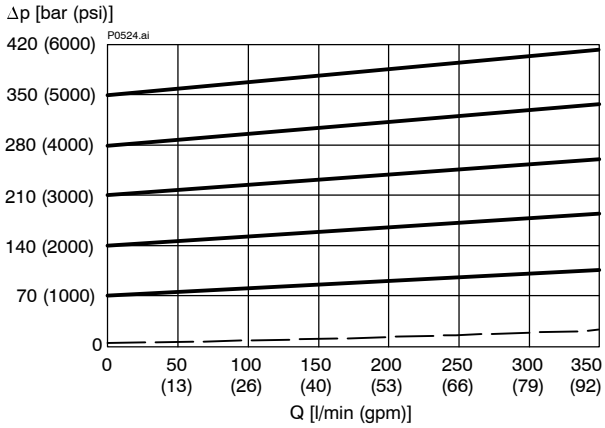

Δp = f (Q) Pressure-drop characteristic (250 bar)

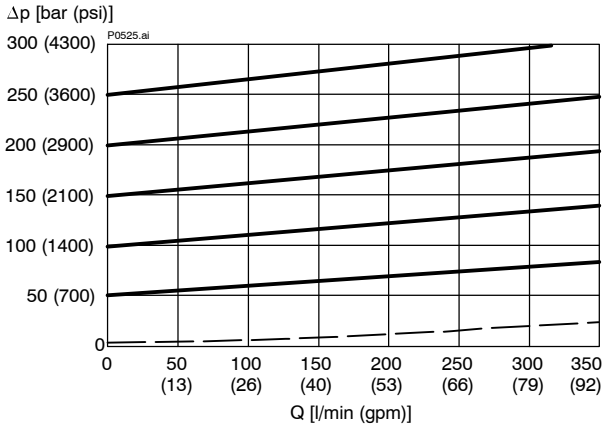

Δp = f (Q) Pressure-drop characteristic (160 bar)

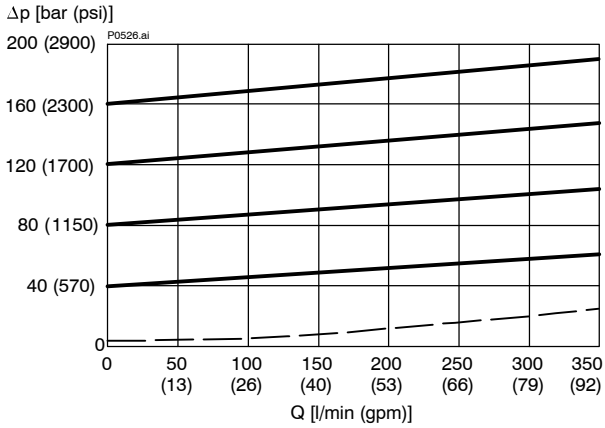

Δp = f (Q) Pressure-drop characteristic (100 bar)

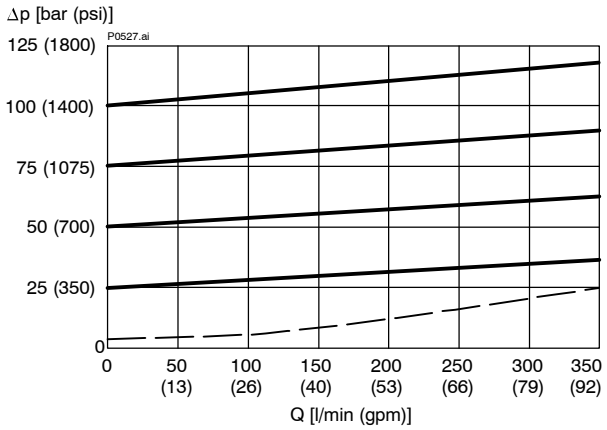

Δp = f (Q) Pressure-drop characteristic (40 bar)

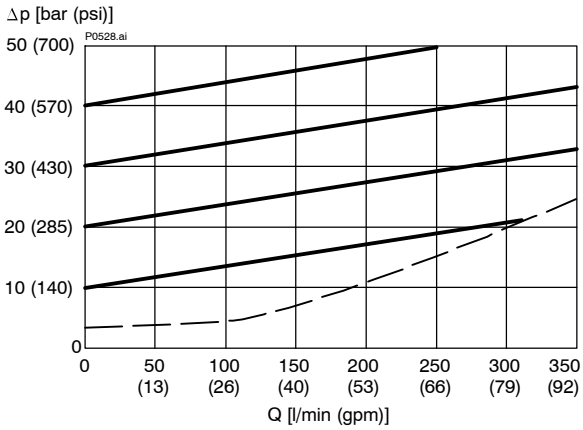

5 Dimensions & sectional view

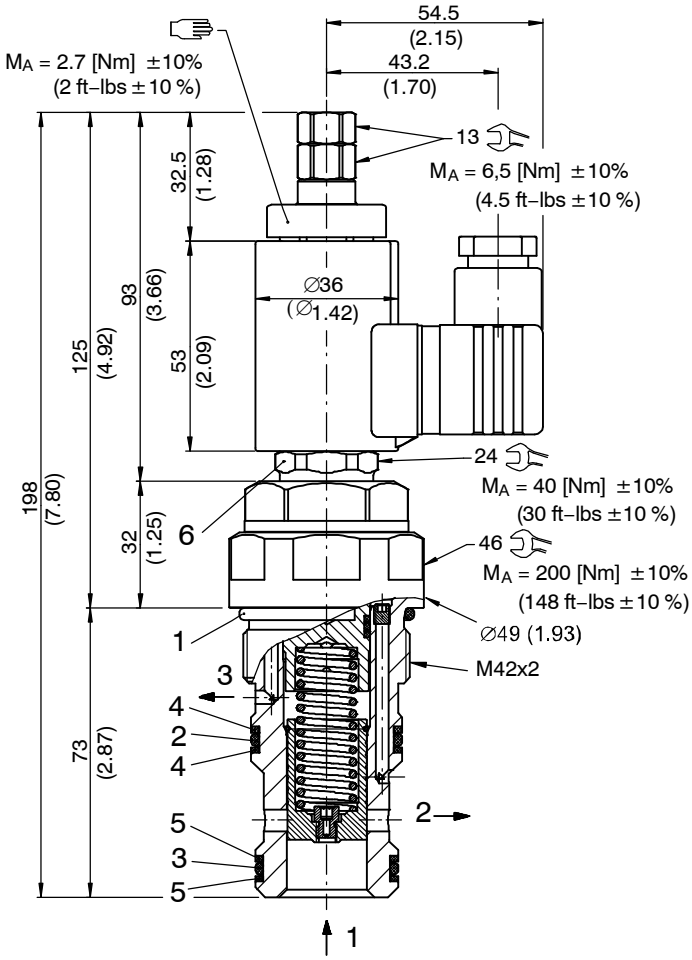

Seal kit NBR no. DS-357-N [2)]

Item	Qty.	Description
1	1	O-ring no. 129 ∅ 39.34 x 2.62 N90
2	1	O-ring no. 125 ∅ 32.99 x 2.62 N90
3	1	O-ring no. 124 ∅ 31.42 x 2.62 N90
4	2	Backup ring ∅ 32.00 x 2.00 x 1.40 FI0751
5	2	Backup ring ∅ 30.00 x 2.00 x 1.40 FI0751
6	1	Seal kit NBR DS-317-N

IMPORTANT!

2) Seal kit with FKM (Viton) seals, no. DS-357-V

6 Installation information

IMPORTANT!
When fitting the cartridges, use the specified tightening torque.

ATTENTION!
Only qualified personnel with mechanical skills may carry out any maintenance work. Generally, the only work that should ever be undertaken is to check, and possibly replace, the seals. When changing seals, oil or grease the new seals thoroughly before fitting them.

7 Pressure adjustment

(pressure p1 must be set first, followed by pressure p2)

Nr.	Setting the higher pressure p1 on series WUVB… as the higher working pressure with solenoid energised:
1)	Slacken and remove cap nut item A (13 A/F).
2)	Slacken lock nut item D (13 A/F) approx. ½ turn.
3)	With pump running and with the solenoid energised, use the two flats (7 A/F) to turn adjusting screw item B until the required pressure is set in port 1.
4)	Hold the adjusting screw item B using the 7 A/F flats while tightening the lock nut item D (13 A/F).
5)	Refit and tighten the cap nut item A.

Nr.	Setting the lower pressure p2 (emergency pressure setting) on series WUVB… (a second pressure or alternatively, unload) with solenoid de-energised:
1)	Slacken and remove cap nut item A (13 A/F).
2)	With pump running and with the solenoid de-energised, use the adjusting screw item C (2.5 A/F hex. socket) to set the pressure p2 in port 1.
3)	Refit and tighten the cap nut item A. (p2 min.: 2 … 10 bar, dependent on flow).

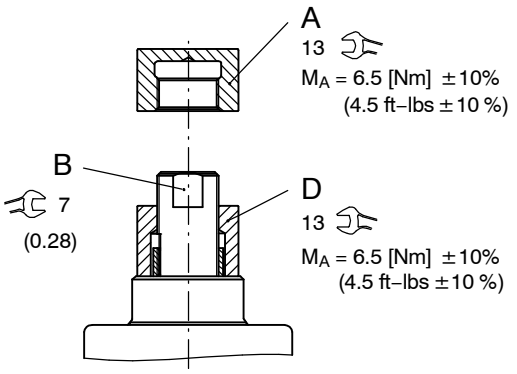

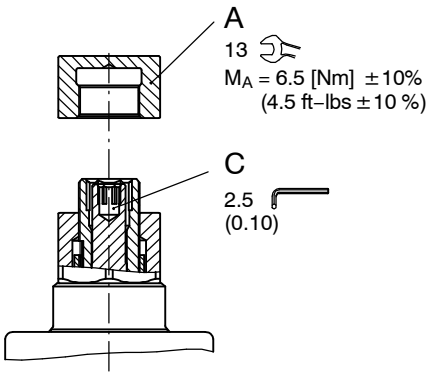

ATTENTION!
When setting pressure p1, adjusting screw item B must not be overtightened as this can damage the shoulder which limits the maximum pressure setting. As soon as a definite end-stop can be felt, do not turn any further.

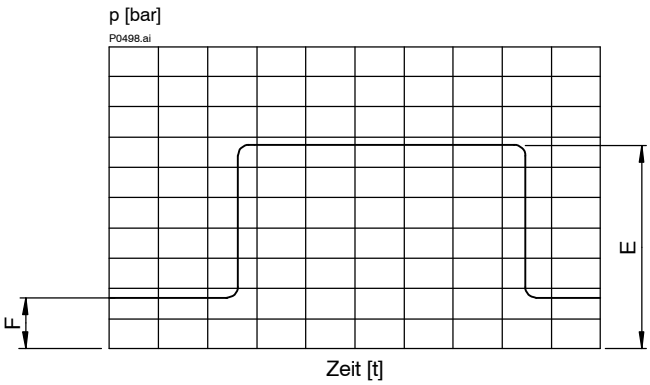

Example – showing the adjustable pressures p1 and p2:

E = pressure p1; as set with item B, solenoid energised
F = pressure p2, max. as E, adjustable at item C, solenoid de-energised

---

The relief pressure p1 is set as the higher working pressure (E) (solenoid energised)
p2 as the lower working pressure (F) (solenoid de-energised)

8 Ordering code

Ex. WU V P B - 3 B O - 42 - 16 _ - 1 24 D _

WU	=	electr. operated pressure-relief valve
V	=	two-stage
P	=	cartridge design
B ... Q	=	standard model per relevant data sheet
Y ... R	=	special features - please consult BUCHER
3	=	pressure function 3 (with external pilot-oil drain 3)
B	=	cavity type EB
O	=	normally open
42	=	pressure range 10 … 420 bar
35	=	pressure range 10 … 350 bar
25	=	pressure range 10 … 250 bar
16	=	pressure range 10 … 160 bar
10	=	pressure range 10 … 100 bar
04	=	pressure range 10 … 040 bar
16	=	nominal size 16
(blank)	=	NBR (Nitrile) seals (**standard**)
V	=	FKM (Viton) seals (special seals - please contact BUCHER)
1 ... 9	=	design stage (omit when ordering new units)
...	=	voltage e.g. **24** (24 V)
D	=	current DC
A	=	current AC
(blank)	=	DIN EN 175301-803 connection with mating plug (**standard, IP 65**)
M100	=	DIN EN 175301-803 connection without mating plug
C	=	Kostal plug connection (IP 65)
JT	=	Junior Timer radial plug connection (with protection diode, IP65)
IT	=	Junior Timer axial plug connection (with protection diode, IP65)
D	=	Deutsch plug connection 45° DT04-2P (IP67/69K)
DT	=	Deutsch plug connection 45° DT04-2P (with protection diode, IP67/69K)
S	=	AMP Superseal 1.5 (IP67) / Metri-Pack 150 (IP65) plug connection
F	=	flying leads (500 mm)

mating plug not supplied

9 Related data sheets

Reference	Description
400-P-040011	The form-tool hire programme
400-P-080111	Cavity type EB
400-P-120110	Coils for screw-in cartridge valves
400-P-287101	Electrically Operated Pressure-Relief Cartridge, Size 1, type WUVB-1
400-P-309101	Stack mounting pressure-relief valve, ISO Size 07, type SWUVPB-3
400-P-750115	Line- and manifold-mounting body, type GEBAA (M42x2)

info.ch@bucherhydraulics.com www.bucherhydraulics.com

© 2019 by Bucher Hydraulics AG Frutigen, CH-3714 Frutigen
All rights reserved.
Data is provided for the purpose of product description only, and must not be construed as warranted characteristics in the legal sense. The information does not relieve users from the duty of conducting their own evaluations and tests. Because the products are subject to continual improvement, we reserve the right to amend the product specifications contained in this catalogue.

Classification: 430.305.300.305.330.300

BUCHER
hydraulics
WWW.SUMY.IR

Pressure valve
Relief function

Q_{max} = 140 l/min, p_{max} = 350 bar
pilot operated, spool type, mechanically adjustable
Type series: DVPA-1C-10-...

- Screw-in cartridge valve
- For cavity DC
- All external parts with zinc-nickel plating according to DIN EN ISO 19598
- Installation in threaded port body type DC-12
- Seated pilot stage
- Very stable operation
- Sensitive adjustment

Description

These two-stage pressure-relief valves, series DVPA-1C-..., are size 10, screw-in cartridge valves with a seated pilot stage and an M24×1.5 mounting thread. They are designed on the proven sliding-spool principle. The spring chamber is internally drained to the secondary connection. The secondary connection should be preferably drained to the tank without pressure. To obtain a reliable pressure setting over the entire pressure range, the overall pressure range is divided into different pressure levels. These valves are mainly used in certain mobile and industrial applications to limit the system pressure. The pressure is set by means of an adjusting spindle. All external parts of the screw-in valves are zinc-nickel plated and are thus suitable for use in the harshest operating environments. For installation and further information, please refer to the section related data sheets.

Symbol

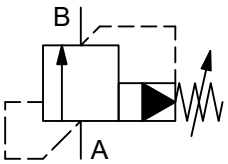

WWW.SUMY.IR

Technical data

General characteristics	Description, value, unit
Function group	Pressure valve
Function	Relief function
Design	Screw-in cartridge valve
Controls	mechanically adjustable
Characteristic	pilot operated, spool type
Construction size	NG 10
Thread size	M24×1,5
Mounting attitude	unrestricted
Weight	0.23 kg
Cavity acc. factory standard	For cavity DC
Tightening torque steel	65 Nm
Tightening torque aluminium	65 Nm
Tightening torque tolerance	± 10 %
Minimum ambient temperature	- 30 °C
Maximum ambient temperature	+ 80 °C
Surface protection	All external parts with zinc-nickel plating according to DIN EN ISO 19598
Sealing material	see ordering code
Seal kit order number	NBR: DS-216-N / FKM: DS-216-V

Hydraulic characteristics	Description, value, unit
Maximum operating pressure	350 bar
Maximum flow rate	140 l/min
Flow direction	see symbol
Hydraulic fluid	HL and HLP mineral oil according to DIN 51 524; other fluids on request!
Minimum fluid temperature	- 30 °C
Maximum fluid temperature	+ 80 °C
Viscosity range	10 ... 650 mm^2/s (cSt)
Recommended viscosity range	15 ... 250 mm^2/s (cSt)
Minimum fluid cleanliness (cleanlineless class according to ISO 4406:1999)	class 20/18/15
Pressure adjustment range	pressure range L: 1 turn = ca. 13 bar pressure range M: 1 turn = ca. 38 bar pressure range N: 1 turn = ca. 65 bar

ATTENTION!
If there is pressure at the secondary connection, this is added to the set pressure value.

Performance graphs

measured with oil viscosity 33.0 mm²/s (cSt)

Δp = f (Q) Pressure drop-flow rate characteristic

Druckstufe Typ N / Pressure range type N

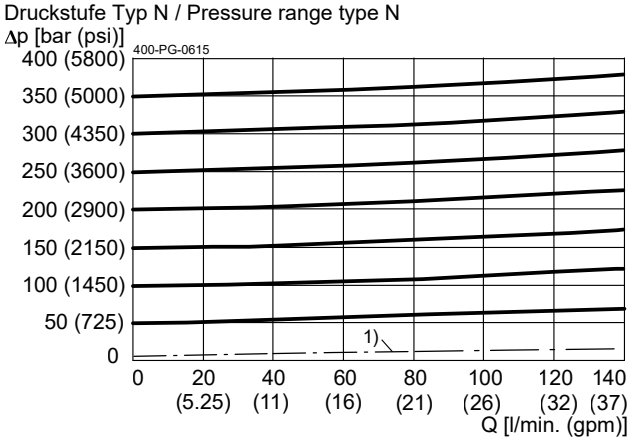

p_N = 350 bar (5000 psi)
1) Einsatzgrenze / Application limit

Δp = f (Q) Pressure drop-flow rate characteristic

Druckstufe Typ M / Pressure range type M

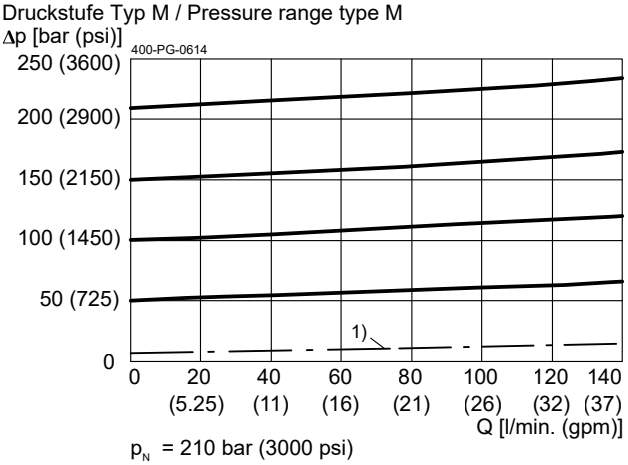

p_N = 210 bar (3000 psi)
1) Einsatzgrenze / Application limit

Δp = f (Q) Pressure drop-flow rate characteristic

Druckstufe Typ L / Pressure range type L

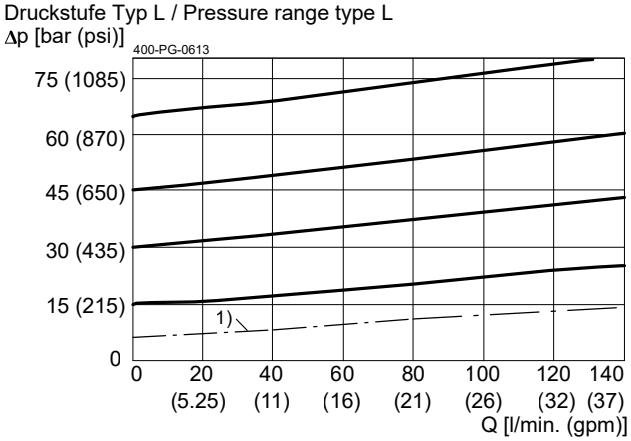

p_N = 65 bar (940 psi)
1) Einsatzgrenze / Application limit

QL = f (l;Δp) Leakage flow rate

Gemessen A nach B / Messured A to B

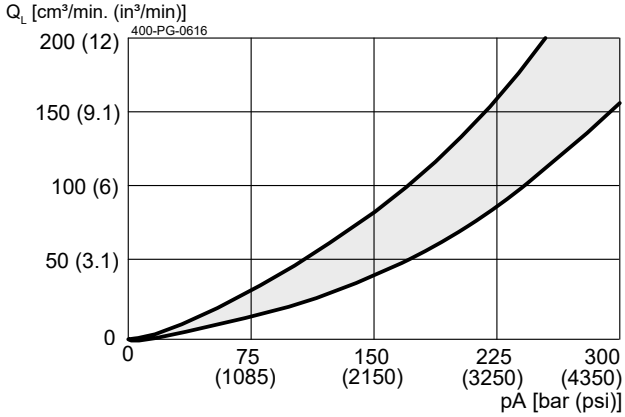

pB = 0 bar (0 psi)
Vorsteuerung geschlossen / Pilot control closed

Dimensions and sectional view

Beispiel für die Masseinheit:
Exampel for the dimensional units:

0.79	= 0.79 mm	millimeter
(.031)	= 0.031"	inch

Version "S": Einstellschraube mit Innensechskant (Standard)
Version "S": adjustment screw with internal hexagon (standard)

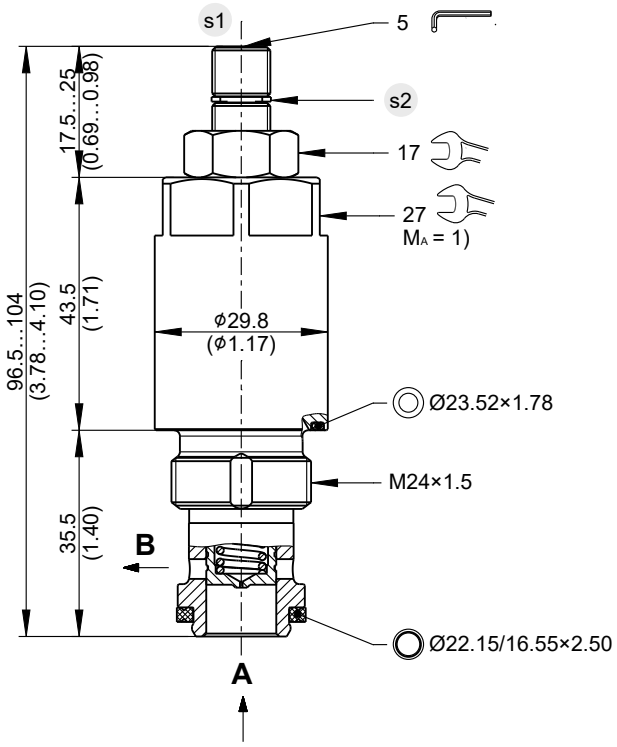

Version "H": Einstellschraube mit Handrad
Version "H": adjustment screw with handknob

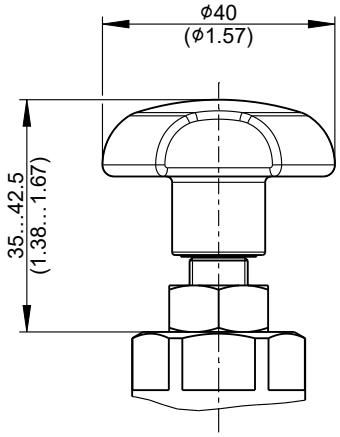

Einstellschraube mit Sicherungskappe
adjustment screw with tamper-proof cap

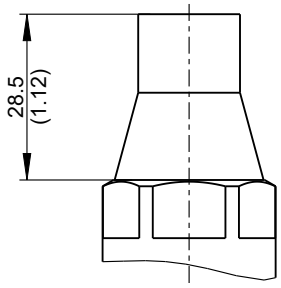

Installation information

NOTE!
1) When fitting the screw-in cartridge valve, use the specified tightening torque. The value can be found in the chapter "Technical data".

NOTE!
Set the required pressure with the adjusting screw (s1). After you have set the valve, lock the adjusting screw (s1) with the lock nut.

NOTE!
Valve settings can be sealed by fitting the tamper-proof cap. To fit the cap, the snap ring (s2) has to be removed. Subsequent adjustment is only possible by destroying the tamper-proof cap.

NOTE!
The seals are not available individually. The seal kit order number can be found in the chapter "Technical data".

ATTENTION!
Only qualified personnel with mechanical skills may carry out any maintenance work. Generally, the only work that should ever be undertaken is to check, and possibly replace, the seals. When changing seals, oil or grease the new seals thoroughly before fitting them.

Ordering code

EX. D V P A - 1 C - 10 - S N N - _

D	=	Pressure control valve
V	=	Vorgesteuert
P	=	Patronenausführung
A ... Q	=	Standard-Ausführung gemäß gültigem Datenblatt
Z ... R	=	Spezial-Ausführung (auf Anfrage)
1	=	Durchflussrichtung 1 (Vorsteuerölabgang intern nach B)
C	=	Cavity type DC
10	=	Nominal size 10
S	=	Schraubenverstellung (Standard)
H	=	Handverstellung
N	=	Druckstufe 10 ... 350 bar (normal spring)
M	=	Druckstufe 10 ... 210 bar (medium spring)
L	=	Druckstufe 10 ... 65 bar (light spring)
N	=	NBR (Nitril-Butadien-Kautschuk / NBR) (Standard)
V	=	FKM (Fluor-Kautschuk / VITON)
		(Spezial-Dichtungen auf Anfrage)
1 ... 9	=	Technische Stand (ein Buchstabe wird weggelassen)
		W

IMPORTANT!
When ordering the pressure control valve (the adjustment screw) must be ordered separately in detail.

Related data sheets

Reference	Description
400-P-040011	Form tools
400-P-060111	Cavity DC
400-P-740101	Threaded port body DC-12

info.ch@bucherhydraulics.com www.bucherhydraulics.com

© 2025 by Bucher Hydraulics AG Frutigen, 3714 Frutigen, Switzerland

All rights reserved.
Data is provided for the purpose of product description only, and must not be construed as warranted characteristics in the legal sense. The information does not relieve users from the duty of conducting their own evaluations and tests. Because the products are subject to continual improvement, we reserve the right to amend the product specifications contained in this catalogue.

WWW.SUMY.IR

Pressure valve
Relief function

Q_{max} = 140 l/min, p_{max} = 350 bar
pilot operated, spool type, mechanically adjustable
Type series: DVPA-2D-10-...

- Screw-in cartridge valve
- For cavity DD
- All external parts with zinc-nickel plating according to DIN EN ISO 19598
- Installation in threaded port body type DDY-12
- Seated pilot stage
- Very stable operation
- Sensitive adjustment
- With additional remote control oil connection

Description

These two-stage pressure relief valves, series DVPA-2D-..., are size 10, screw-in cartridge valves with a seated pilot stage and an M24×1.5 mounting thread. They are designed on the proven sliding-spool principle. The spring chamber is internally drained to the secondary connection. The secondary connection should be preferably drained to the tank without pressure. To obtain a reliable pressure setting over the entire pressure range, the overall pressure range is divided into different pressure stages. These valves are mainly used in certain mobile and industrial applications to limit the system pressure. The pressure is set by means of an adjusting spindle. All external parts of the screw-in valves are zinc-nickel plated and are thus suitable for use in the harshest operating environments. For installation and further information, please refer to the section related data sheets.

Symbol

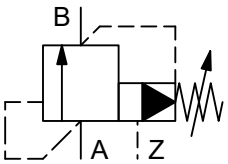

WWW.SUMY.IR

Technical data

General characteristics	Description, value, unit
Function group	Pressure valve
Function	Relief function
Design	Screw-in cartridge valve
Controls	mechanically adjustable
Characteristic	pilot operated, spool type
Construction size	NG 10
Thread size	M24×1,5
Mounting attitude	unrestricted
Weight	0.23 kg
Cavity acc. factory standard	For cavity DD
Tightening torque steel	65 Nm
Tightening torque aluminium	50 Nm
Tightening torque tolerance	± 10 %
Minimum ambient temperature	- 30 °C
Maximum ambient temperature	+ 80 °C
Surface protection	All external parts with zinc-nickel plating according to DIN EN ISO 19598
Sealing material	see ordering code
Seal kit order number	NBR: DS-216-N / FKM: DS-216-V

Hydraulic characteristics	Description, value, unit
Maximum operating pressure	350 bar
Maximum flow rate	140 l/min
Flow direction	see symbol
Hydraulic fluid	HL and HLP mineral oil according to DIN 51 524; other fluids on request!
Minimum fluid temperature	- 30 °C
Maximum fluid temperature	+ 80 °C
Viscosity range	10 ... 650 mm^2/s (cSt)
Recommended viscosity range	15 ... 250 mm^2/s (cSt)
Minimum fluid cleanliness (cleanlineless class according to ISO 4406:1999)	class 20/18/15
Pressure adjustment range	pressure range L: 1 turn = ca. 13 bar pressure range M: 1 turn = ca. 38 bar pressure range N: 1 turn = ca. 65 bar

ATTENTION!
If there is pressure at the secondary connection, this is added to the set pressure value.

Performance graphs

measured with oil viscosity 33.0 mm²/s (cSt)

Δp = f (Q) Pressure drop-flow rate characteristic

Druckstufe Typ N / Pressure range type N

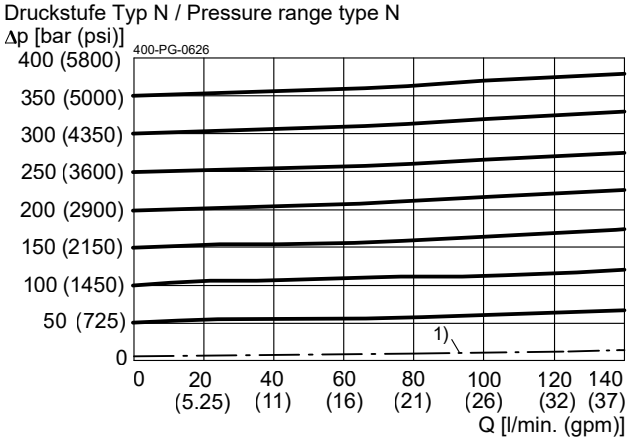

p_N = 350 bar (5000 psi)
1) Einsatzgrenze / Application limit

Δp = f (Q) Pressure drop-flow rate characteristic

Druckstufe Typ M / Pressure range type M

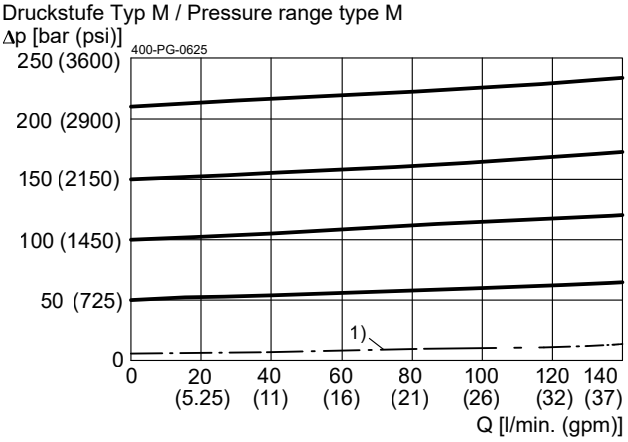

p_N = 210 bar (3000 psi)
1) Einsatzgrenze / Application limit

Δp = f (Q) Pressure drop-flow rate characteristic

Druckstufe Typ L / Pressure range type L

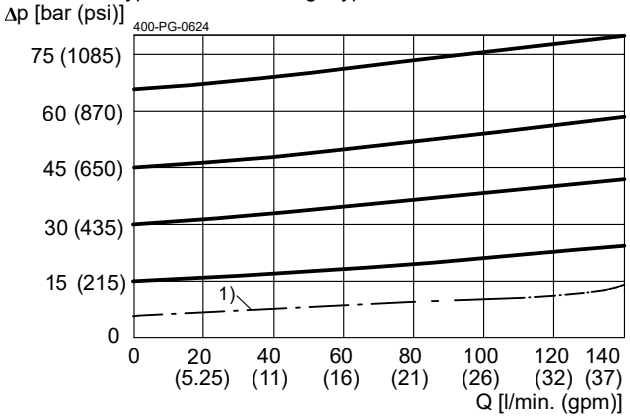

p_N = 65 bar (940 psi)
1) Einsatzgrenze / Application limit

QL = f (l;Δp) Leakage flow rate

Gemessen A nach B / Messured A to B

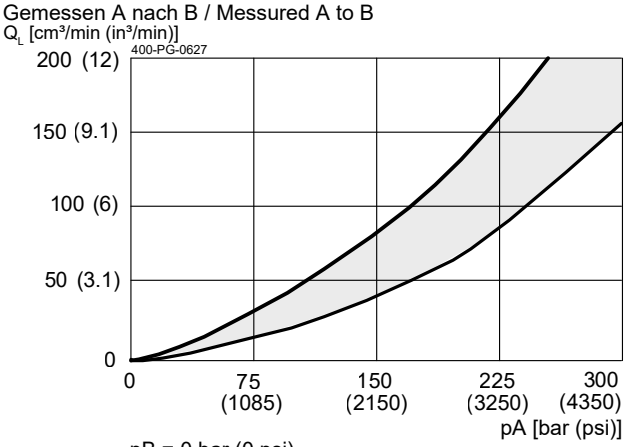

pB = 0 bar (0 psi)
Vorsteuerung geschlossen / Pilot control closed

Dimensions and sectional view

Beispiel für die Masseinheit:
Exampel for the dimensional units:

0.79	= 0.79 mm	millimeter
(.031)	= 0.031"	inch

Version "S": Einstellschraube mit Innensechskant (Standard)
Version "S": adjustment screw with internal hexagon (standard)

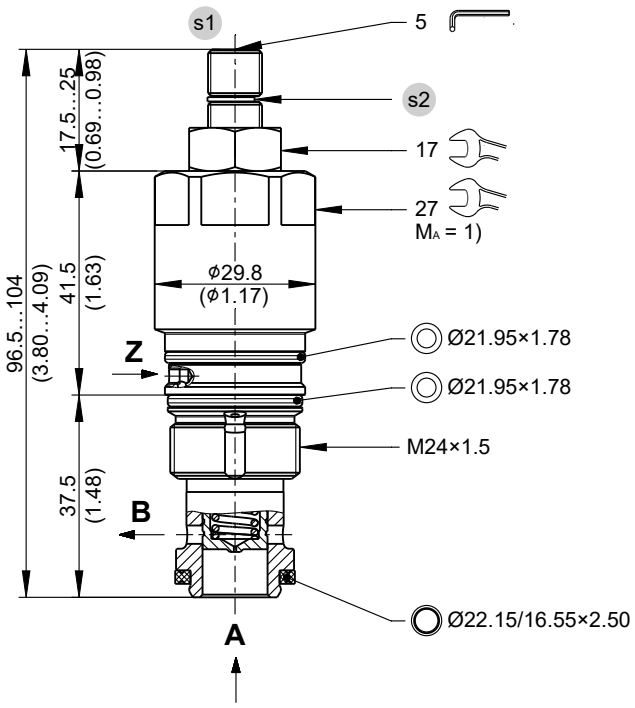

Version "H": Einstellschraube mit Handrad
Version "H": adjustment screw with handknob

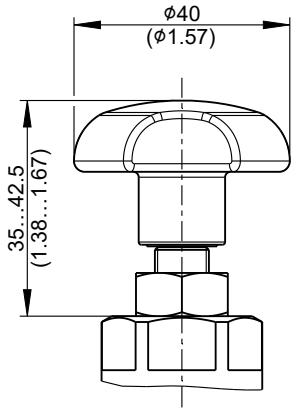

Einstellschraube mit Sicherungskappe
adjustment screw with tamper-proof cap

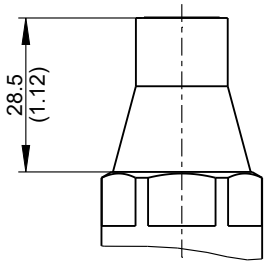

Installation information

NOTE!
1) When fitting the screw-in cartridge valve, use the specified tightening torque. The value can be found in the chapter "Technical data".

NOTE!
Set the required pressure with the adjusting screw (s1). After you have set the valve, lock the adjusting screw (s1) with the lock nut.

NOTE!
Valve settings can be sealed by fitting the tamper-proof cap. To fit the cap, the snap ring (s2) has to be removed. Subsequent adjustment is only possible by destroying the tamper-proof cap.

NOTE!
The seals are not available individually. The seal kit order number can be found in the chapter "Technical data".

ATTENTION!
Only qualified personnel with mechanical skills may carry out any maintenance work. Generally, the only work that should ever be undertaken is to check, and possibly replace, the seals. When changing seals, oil or grease the new seals thoroughly before fitting them.

Ordering code

EX. D V P A - 2 D - 10 - S N N - _

D	=	Pressure control valve
V	=	Vorgesteuert
P	=	Patronenausführung
A ... Q	=	Standard-Ausführung gemäß gültigem Datenblatt
Z ... R	=	Special-Ausführung (auf Anfrage)
2	=	Druckventil 2 (mit Fernsteueranschluss) / Control valve 2 (with remote control port Z)
D	=	Cavity type DD
10	=	Nominal size 10
S	=	Adjustment-Verstellung with knob **(standard)**
H	=	Adjustment-Verstellung with hand knob
N	=	Pressure range 35...350 bar (normal spring)
M	=	Pressure range 21...210 bar (medium spring)
L	=	Pressure range 6...65 bar (light spring)
N	=	NBR (Nitril-Butadien-Kautschuk / NBR seals) **(standard)**
V	=	FKM (Fluor-Kautschuk / VITON seals)
		(Special-Dichtungen auf Anfrage)
1 ... 9	=	Technische Stand (keine Bestellbezeichnung)
		W

IMPORTANT!
When ordering, please specify the complete ordering code and the product name separately in detail.

Related data sheets

Reference	Description
400-P-040011	Form tools
400-P-060121	Cavity DD
400-P-740112	Threaded port body DDY-12

info.ch@bucherhydraulics.com www.bucherhydraulics.com

© 2025 by Bucher Hydraulics AG Frutigen, 3714 Frutigen, Switzerland

All rights reserved.
Data is provided for the purpose of product description only, and must not be construed as warranted characteristics in the legal sense. The information does not relieve users from the duty of conducting their own evaluations and tests. Because the products are subject to continual improvement, we reserve the right to amend the product specifications contained in this catalogue.

BUCHER hydraulics

WWW.SUMY.IR

Pressure valve
Sequence function

Q_{max} = 140 l/min, p_{max} = 350 bar
pilot operated, spool type, mechanically adjustable
Type series: DVPA-3D-10-...

- Screw-in cartridge valve
- For cavity DD
- All external parts with zinc-nickel plating according to DIN EN ISO 19598
- Installation in threaded port body type DDY-12
- Seated pilot stage
- Very stable operation
- Sensitive adjustment
- With external spring space relief

Description

These two-stage pressure relief valves, series DVPA-3D-..., are size 10, screw-in cartridge valves with a seated pilot stage and an M24×1.5 mounting thread. They are designed on the proven sliding-spool principle. The spring chamber is drained with an additional connection. The pressure applied to the secondary connection has no influence on the setting of the valve. To obtain a reliable pressure setting over the entire pressure range, the overall pressure range is divided into different pressure levels. These valves are mainly used in certain mobile and industrial applications to limit the system pressure. The pressure is set by means of an adjusting spindle. All external parts of the screw-in valves are zinc-nickel plated and are thus suitable for use in the harshest operating environments. For installation and further information, please refer to the section related data sheets.

Symbol

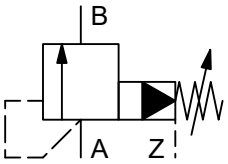

Technical data

General characteristics	Description, value, unit
Function group	Pressure valve
Function	Sequence function
Design	Screw-in cartridge valve

WWW.SUMY.IR

General characteristics	Description, value, unit
Controls	mechanically adjustable
Characteristic	pilot operated, spool type
Construction size	NG 10
Thread size	M24×1,5
Mounting attitude	unrestricted
Weight	0.23 kg
Cavity acc. factory standard	For cavity DD
Tightening torque steel	65 Nm
Tightening torque aluminium	50 Nm
Tightening torque tolerance	± 10 %
Minimum ambient temperature	- 30 °C
Maximum ambient temperature	+ 80 °C
Surface protection	All external parts with zinc-nickel plating according to DIN EN ISO 19598
Sealing material	see ordering code
Seal kit order number	NBR: DS-216-N / FKM: DS-216-V

Hydraulic characteristics	Description, value, unit
Maximum operating pressure	350 bar
Maximum flow rate	140 l/min
Flow direction	see symbol
Hydraulic fluid	HL and HLP mineral oil according to DIN 51 524; other fluids on request!
Minimum fluid temperature	- 30 °C
Maximum fluid temperature	+ 80 °C
Viscosity range	10 ... 650 mm^2/s (cSt)
Recommended viscosity range	15 ... 250 mm^2/s (cSt)
Minimum fluid cleanliness (cleanlineless class according to ISO 4406:1999)	class 20/18/15
Pressure adjustment range	pressure range L: 1 turn = ca. 13 bar pressure range M: 1 turn = ca. 38 bar pressure range N: 1 turn = ca. 65 bar

Performance graphs

measured with oil viscosity 33.0 mm²/s (cSt)

Δp = f (Q) Pressure drop-flow rate characteristic

Druckstufe Typ N / Pressure range type N

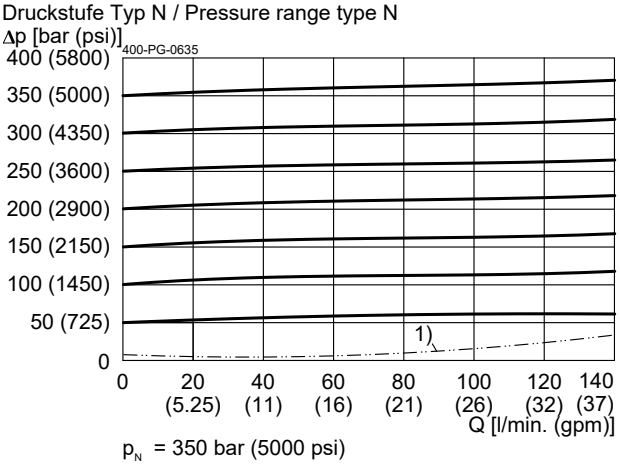

p_N = 350 bar (5000 psi)
1) Einsatzgrenze / Application limit

Δp = f (Q) Pressure drop-flow rate characteristic

Druckstufe Typ M / Pressure range type M

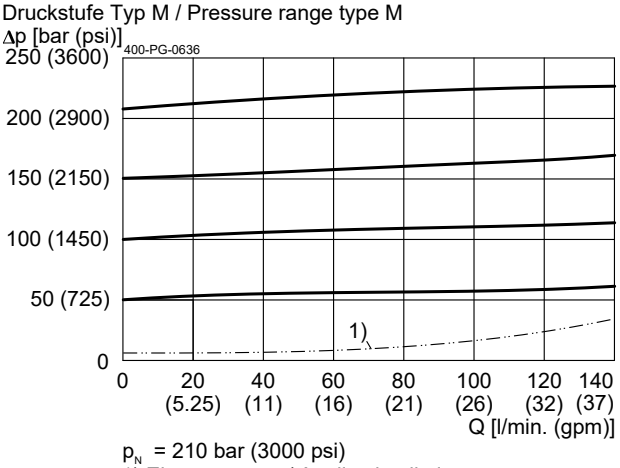

p_N = 210 bar (3000 psi)
1) Einsatzgrenze / Application limit

Δp = f (Q) Pressure drop-flow rate characteristic

Druckstufe Typ L / Pressure range type L

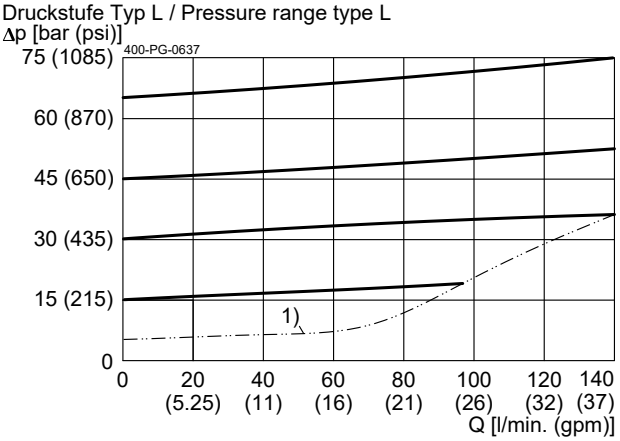

p_N = 65 bar (640 psi)
1) Einsatzgrenze / Application limit

QL = f (l;Δp) Leakage flow rate

Gemessen A nach B / Messured A to B

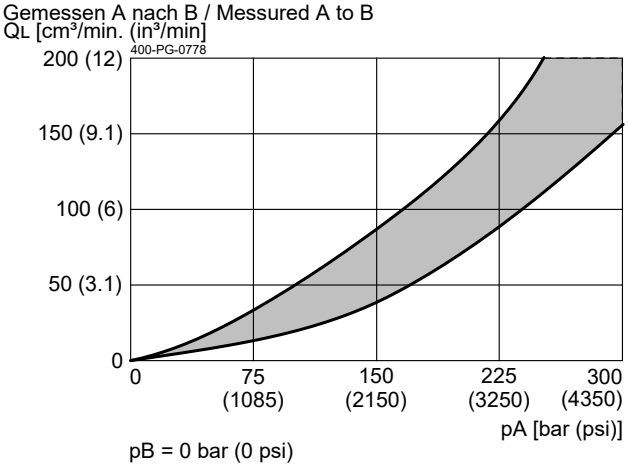

pB = 0 bar (0 psi)
Vorsteuerung geschlossen / Pilot control closed

p = f (Q) Pressure-flow rate

Steuerölverbrauch in Z / Control oil consumption at Z

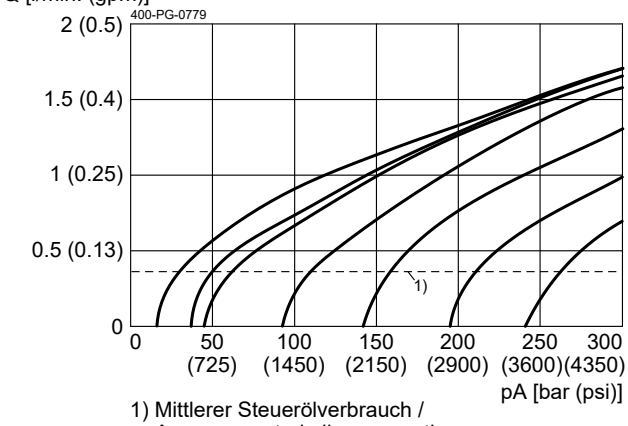

1) Mittlerer Steuerölverbrauch /
Average control oil consumption

Dimensions and sectional view

Beispiel für die Masseinheit:
Exampel for the dimensional units:

0.79	= 0.79 mm	millimeter
(.031)	= 0.031"	inch

Version "S": Einstellschraube mit Innensechskant (Standard)
Version "S": adjustment screw with internal hexagon (standard)

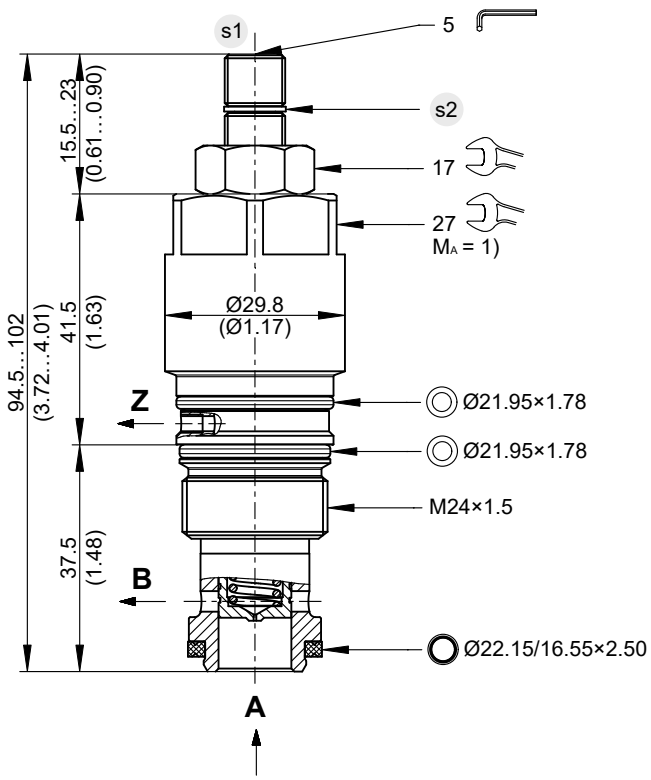

Version "H": Einstellschraube mit Handrad
Version "H": adjustment screw with handknob

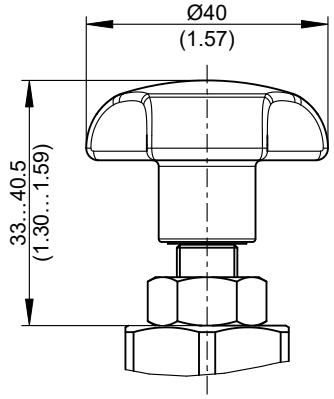

Einstellschraube mit Sicherungskappe
adjustment screw with tamper-proof cap

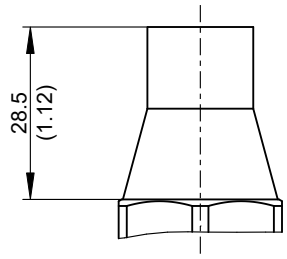

Installation information

NOTE!
1) When fitting the screw-in cartridge valve, use the specified tightening torque. The value can be found in the chapter "Technical data".

NOTE!
Set the required pressure with the adjusting screw (s1). After you have set the valve, lock the adjusting screw (s1) with the lock nut.

NOTE!
Valve settings can be sealed by fitting the tamper-proof cap. To fit the cap, the snap ring (s2) has to be removed. Subsequent adjustment is only possible by destroying the tamper-proof cap.

NOTE!
The seals are not available individually. The seal kit order number can be found in the chapter "Technical data".

ATTENTION!
Only qualified personnel with mechanical skills may carry out any maintenance work. Generally, the only work that should ever be undertaken is to check, and possibly replace, the seals. When changing seals, oil or grease the new seals thoroughly before fitting them.

Ordering code

EX. D V P A - 3 D - 10 - S N N - _

D	=	Pressure control valve
V	=	Voltage operated
P	=	Cartridge design
A ... Q	=	Standard-Ausführung gemäß gültigem Datenblatt
Z ... R	=	Spezial-Ausführung (auf Anfrage)
3	=	Durchflusstyp 3 (Mit externer Federraumentlastung)
D	=	Bauform DD
10	=	Nennweite 10
S	=	Einstellschraube mit Innensechskant (Standard)
H	=	Einstellschraube mit Handrad
N	=	Messbereich 35…350 bar / 145…5076 psi (normal spring)
M	=	Messbereich 21…210 bar / 145…3046 psi (medium spring)
L	=	Messbereich 10…65 bar / 145…943 psi (light spring)
N	=	NBR (Nitril-Butadien-Kautschuk / NBR-Dichtungen) (Standard)
V	=	FKM (Fluor-Kautschuk / VITON-Dichtungen)
		(Spezial-Dichtungen auf Anfrage)
1 ... 9	=	Technischer Stand (keine Bestellnummer)
		W
		W
		W

IMPORTANT!
Schwenkkopf (Plombierung) für Einstellschraube ist bei Bedarf separat zu bestellen.

Related data sheets

Reference	Description
400-P-040011	Form tools
400-P-060121	Cavity DD
400-P-740112	Threaded port body DDY-12

info.ch@bucherhydraulics.com www.bucherhydraulics.com

© 2025 by Bucher Hydraulics AG Frutigen, 3714 Frutigen, Switzerland

All rights reserved.
Data is provided for the purpose of product description only, and must not be construed as warranted characteristics in the legal sense. The information does not relieve users from the duty of conducting their own evaluations and tests. Because the products are subject to continual improvement, we reserve the right to amend the product specifications contained in this catalogue.

BUCHER hydraulics
WWW.SUMY.IR

Pressure valve
Relief function

Q_{max} = 350 l/min, p_{max} = 420 bar
pilot operated, spool type, mechanically adjustable
Type series: DVPB-1-16-...

- Screw-in cartridge valve
- For cavity EB
- All external parts with zinc-nickel plating according to DIN EN ISO 19598
- Installation in threaded port body type GEBAA
- Seated pilot stage
- Very stable operation
- Sensitive adjustment

Description

These two-stage pressure relief valves, series DVPB-1-..., are size 16, screw-in cartridge valves with a seated pilot stage and an M42×2 mounting thread. They are designed on the proven sliding-spool principle. The spring chamber is internally drained to the secondary connection. The secondary connection should be preferably drained to the tank without pressure. To obtain a reliable pressure setting over the entire pressure range, the overall pressure range is divided into different pressure levels. These valves are mainly used in certain mobile and industrial applications to limit the system pressure. The pressure is set by means of an adjusting spindle. All external parts of the screw-in valves are zinc-nickel plated and are thus suitable for use in the harshest operating environments. For installation and further information, please refer to the section related data sheets.

Symbol

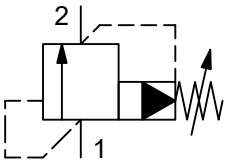

Technical data

General characteristics	Description, value, unit
Function group	Pressure valve
Function	Relief function
Design	Screw-in cartridge valve
Controls	mechanically adjustable

WWW.SUMY.IR

General characteristics	Description, value, unit
Characteristic	pilot operated, spool type
Construction size	NG 16
Thread size	M42×2
Mounting attitude	unrestricted
Weight	0.95 kg
Cavity acc. ISO	fits into ISO 7789: 42-06-0-07
Cavity acc. factory standard	For cavity EB
Tightening torque steel	200 Nm
Tightening torque aluminium	200 Nm
Tightening torque tolerance	± 10 %
Minimum ambient temperature	- 30 °C
Maximum ambient temperature	+ 80 °C
Surface protection	All external parts with zinc-nickel plating according to DIN EN ISO 19598
Sealing material	see ordering code
Seal kit order number	NBR: DS-344-N / FKM: DS-344-V

Hydraulic characteristics	Description, value, unit
Maximum operating pressure	420 bar
Maximum flow rate	350 l/min
Flow direction	see symbol
Hydraulic fluid	HL and HLP mineral oil according to DIN 51 524; other fluids on request!
Minimum fluid temperature	- 30 °C
Maximum fluid temperature	+ 80 °C
Viscosity range	10 ... 650 mm^2/s (cSt)
Recommended viscosity range	15 ... 250 mm^2/s (cSt)
Minimum fluid cleanliness (cleanlineless class according to ISO 4406:1999)	class 20/18/15
Pressure adjustment range	pressure range 04: 1 turn = ca. 8 bar pressure range 10: 1 turn = ca. 21 bar pressure range 16: 1 turn = ca. 32 bar pressure range 25: 1 turn = ca. 51 bar pressure range 35: 1 turn = ca. 70 bar pressure range 42: 1 turn = ca. 80 bar

ATTENTION!
If there is pressure at the secondary connection, this is added to the set pressure value.

Performance graphs

measured with oil viscosity 33.0 mm²/s (cSt)

Δp = f (Q) Pressure drop-flow rate characteristic

Druckstufe Typ 04 / Pressure range type 04

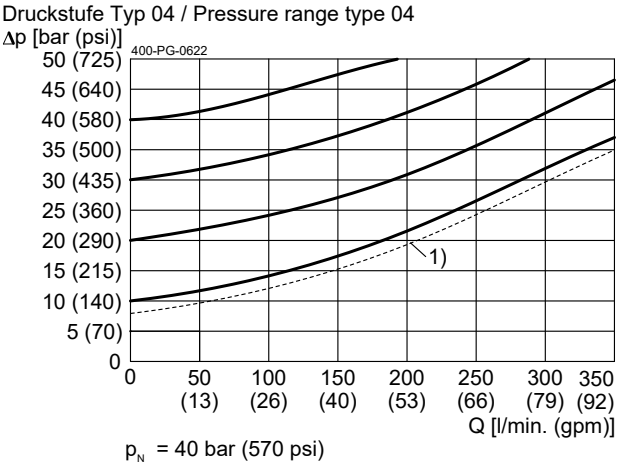

p_N = 40 bar (570 psi)
1) Einsatzgrenze / Application limit

Δp = f (Q) Pressure drop-flow rate characteristic

Druckstufe Typ 10 / Pressure range type 10

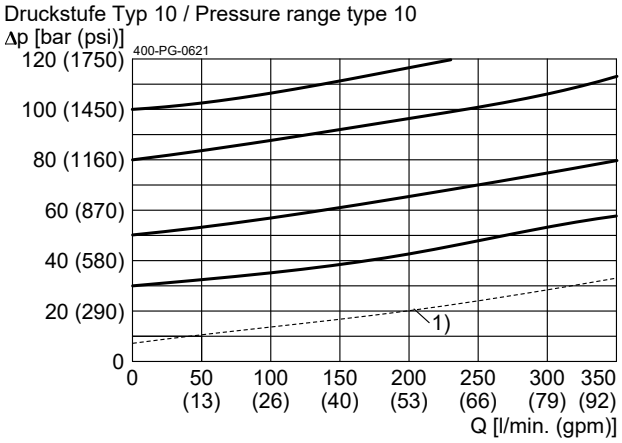

p_N = 100 bar (1400 psi)
1) Einsatzgrenze / Application limit

Δp = f (Q) Pressure drop-flow rate characteristic

Druckstufe Typ 16 / Pressure range type 16

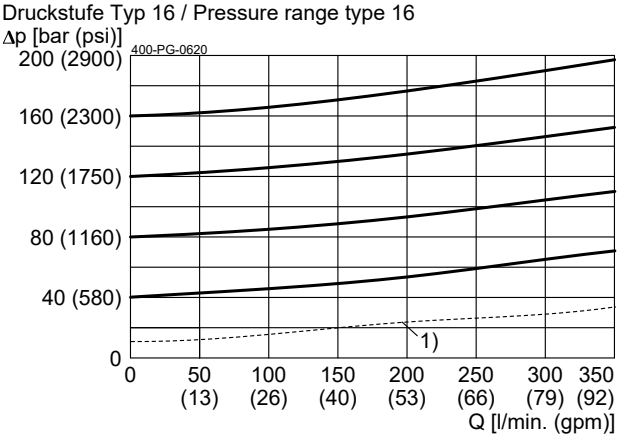

p_N = 160 bar (2300 psi)
1) Einsatzgrenze / Application limit

Δp = f (Q) Pressure drop-flow rate characteristic

Druckstufe Typ 25 / Pressure range type 25

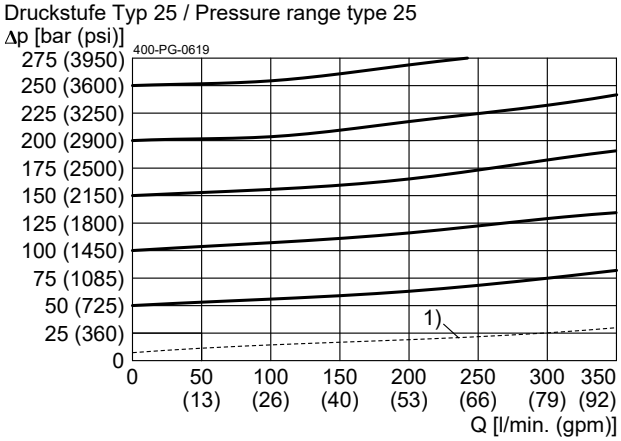

p_N = 250 bar (3600 psi)
1) Einsatzgrenze / Application limit

Δp = f (Q) Pressure drop-flow rate characteristic

Druckstufe Typ 35 / Pressure range type 35

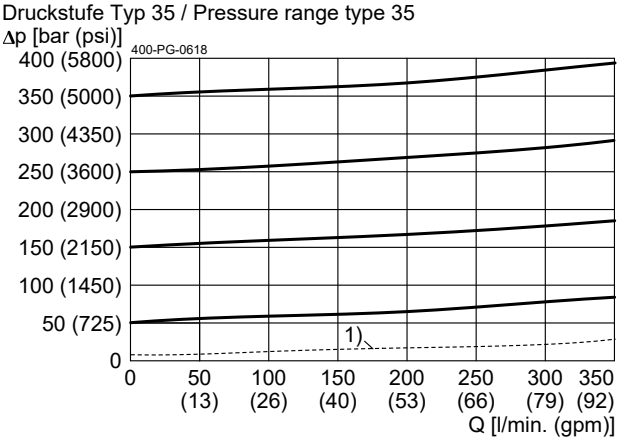

p_N = 350 bar (5000 psi)
1) Einsatzgrenze / Application limit

Δp = f (Q) Pressure drop-flow rate characteristic

Druckstufe Typ 42 / Pressure range type 42

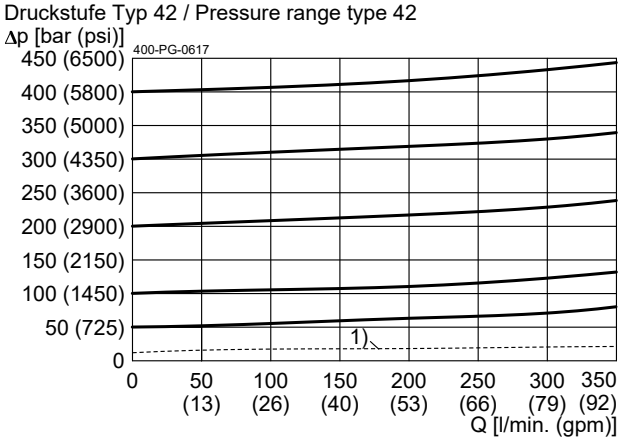

p_N = 420 bar (6000 psi)
1) Einsatzgrenze / Application limit

QL = f (l;Δp) Leakage flow rate

Gemessen 1 nach 2 / Messured 1 to 2

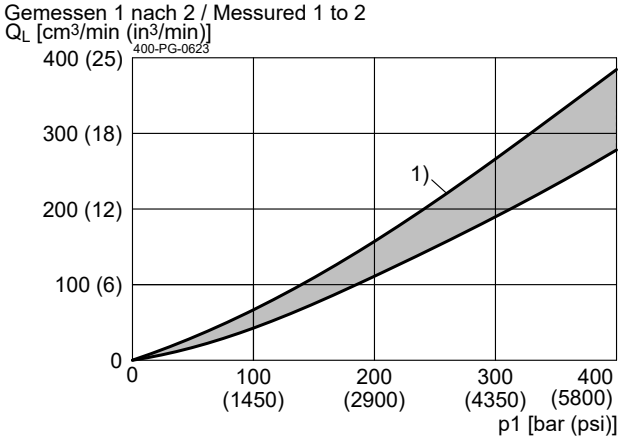

p2 = 0 bar (0 psi)
Vorsteuerung geschlossen / Pilot control closed

Dimensions and sectional view

Beispiel für die Masseinheit:
Exampel for the dimensional units:

0.79	= 0.79 mm	millimeter
(.031)	= 0.031"	inch

Version "S": Einstellschraube mit Innensechskant (Standard)
Version "S": adjustment screw with internal hexagon (standard)

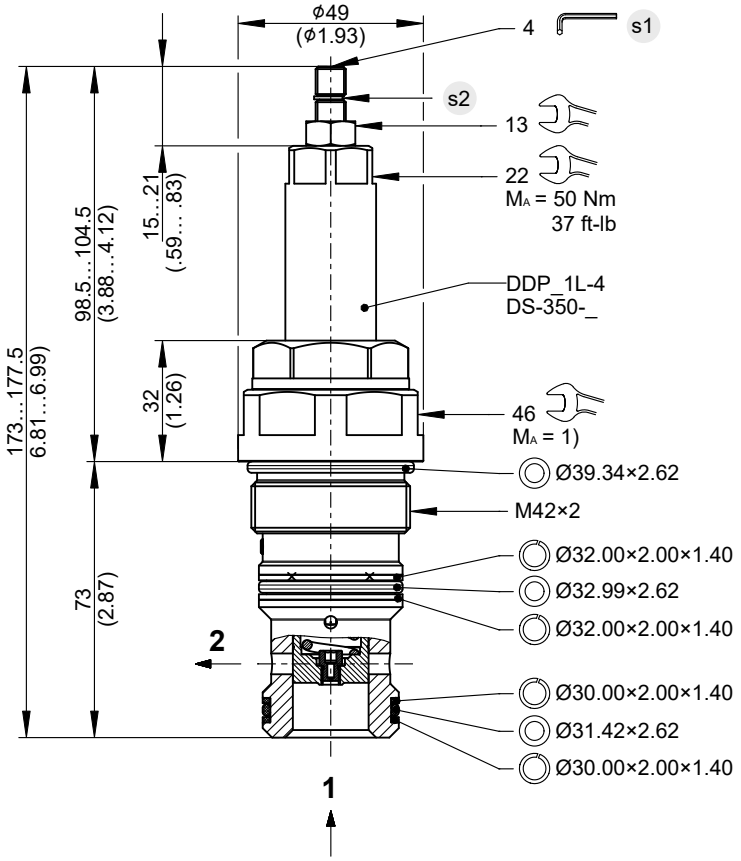

Version "H": Einstellschraube mit Handrad
Version "H": adjustment screw with handknob

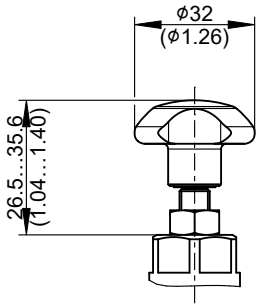

Einstellschraube mit Sicherungskappe
adjustment screw with tamper-proof cap

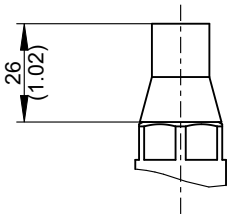

BUCHER hydraulics
WWW.SUMY.IR

Installation information

NOTE!
1) When fitting the screw-in cartridge valve, use the specified tightening torque. The value can be found in the chapter "Technical data".

NOTE!
Set the required pressure with the adjusting screw (s1). After you have set the valve, lock the adjusting screw (s1) with the lock nut.

NOTE!
Valve settings can be sealed by fitting the tamper-proof cap. To fit the cap, the snap ring (s2) has to be removed. Subsequent adjustment is only possible by destroying the tamper-proof cap.

NOTE!
The seals are not available individually. The seal kit order number can be found in the chapter "Technical data".

ATTENTION!
Only qualified personnel with mechanical skills may carry out any maintenance work. Generally, the only work that should ever be undertaken is to check, and possibly replace, the seals. When changing seals, oil or grease the new seals thoroughly before fitting them.

Ordering code

Ex. D V P B - 1 - 16 - 04 - S _ - _

D	=	Pressure control valve
V	=	Poppet type
P	=	Cartridge design
A ... Q	=	Standard model according to valve data sheet
Z ... R	=	Special model (upon request)
1	=	Port function 1 (Internal control, blind end, secondary connection)
16	=	Nominal size 16
04	=	Pressure range 40 bar / …580 psi
10	=	Pressure range 100 bar / …1450 psi
16	=	Pressure range 160 bar / …2300 psi
25	=	Pressure range 250 bar / …3600 psi
35	=	Pressure range 350 bar / …5000 psi
42	=	Pressure range 420 bar / …6000 psi
S	=	Adjustment screw with hexagon (standard)
H	=	Adjustment screw with hand knob
(blank)	=	NBR (Nitril-Butadien-Kautschuk / NBR) seals (standard)
V	=	FKM (Fluor-Kautschuk / VITON) seals
		(Special elastomer seals)
1 ... 9	=	Technical design (on request)
		W

IMPORTANT!
When using the tamper-proof cap (the adjustment seal), the adjustment screw must be ordered separately in plain language.

Related data sheets

Reference	Description
400-P-040011	Form tools
400-P-080111	Cavity EB
400-P-750115	Threaded port body GEBAA
400-P-260111	Relief function DDPC-1L-4-...

info.ch@bucherhydraulics.com **www.bucherhydraulics.com**

© 2025 by Bucher Hydraulics AG Frutigen, 3714 Frutigen, Switzerland

All rights reserved.
Data is provided for the purpose of product description only, and must not be construed as warranted characteristics in the legal sense. The information does not relieve users from the duty of conducting their own evaluations and tests. Because the products are subject to continual improvement, we reserve the right to amend the product specifications contained in this catalogue.

BUCHER hydraulics
WWW.SUMY.IR

Pressure valve
Relief function

Q_{max} = 350 l/min, p_{max} = 420 bar
pilot operated, spool type, mechanically adjustable
Type series: DVPB-2-16-...

- Screw-in cartridge valve
- For cavity EB
- All external parts with zinc-nickel plating according to DIN EN ISO 19598
- Installation in threaded port body type GEBAA
- Seated pilot stage
- Very stable operation
- Sensitive adjustment
- With additional remote control oil connection

Description

The two-stage pressure relief valves, series DVPB-2-..., are size 16, screw-in valves with a seated pilot stage and an M42×2 mounting thread. They are designed on the proven sliding-spool principle. The spring chamber is internally drained to the secondary connection. The secondary connection should be preferably drained to the tank without pressure. To obtain a reliable pressure setting over the entire pressure range, the overall pressure range is divided into different pressure levels. These valves are mainly used in certain mobile and industrial applications to limit the system pressure. The pressure is set by means of an adjusting spindle. All external parts of the screw-in valves are zinc-nickel plated and are thus suitable for use in the harshest operating environments. For installation and further information, please refer to the section related data sheets.

Symbol

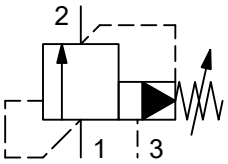

Technical data

General characteristics	Description, value, unit
Function group	Pressure valve
Function	Relief function
Design	Screw-in cartridge valve

WWW.SUMY.IR

General characteristics	Description, value, unit
Controls	mechanically adjustable
Characteristic	pilot operated, spool type
Construction size	NG 16
Thread size	M42×2
Mounting attitude	unrestricted
Weight	0.95 kg
Cavity acc. ISO	fits into ISO 7789: 42-06-0-07
Cavity acc. factory standard	For cavity EB
Tightening torque steel	200 Nm
Tightening torque aluminium	200 Nm
Tightening torque tolerance	± 10 %
Minimum ambient temperature	- 30 °C
Maximum ambient temperature	+ 80 °C
Surface protection	All external parts with zinc-nickel plating according to DIN EN ISO 19598
Sealing material	see ordering code
Seal kit order number	NBR: DS-344-N / FKM: DS-344-V

Hydraulic characteristics	Description, value, unit
Maximum operating pressure	420 bar
Maximum flow rate	350 l/min
Flow direction	see symbol
Hydraulic fluid	HL and HLP mineral oil according to DIN 51 524; other fluids on request!
Minimum fluid temperature	- 30 °C
Maximum fluid temperature	+ 80 °C
Viscosity range	10 ... 650 mm^2/s (cSt)
Recommended viscosity range	15 ... 250 mm^2/s (cSt)
Minimum fluid cleanliness (cleanlineless class according to ISO 4406:1999)	class 20/18/15
Pressure adjustment range	pressure range 04: 1 turn = ca. 8 bar pressure range 10: 1 turn = ca. 21 bar pressure range 16: 1 turn = ca. 32 bar pressure range 25: 1 turn = ca. 51 bar pressure range 35: 1 turn = ca. 70 bar pressure range 42: 1 turn = ca. 80 bar

ATTENTION!
If there is pressure at the secondary connection, this is added to the set pressure value.

Performance graphs

measured with oil viscosity 33.0 mm²/s (cSt)

Δp = f (Q) Pressure drop-flow rate characteristic

Druckstufe Typ 04 / Pressure range type 04

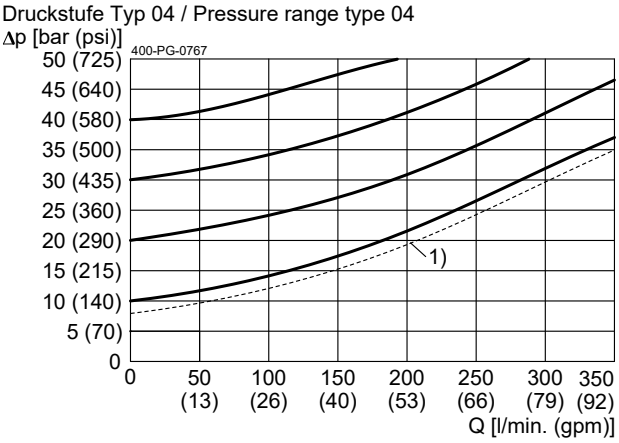

p_N = 40 bar (570 psi)
1) Einsatzgrenze / Application limit

Δp = f (Q) Pressure drop-flow rate characteristic

Druckstufe Typ 10 / Pressure range type 10

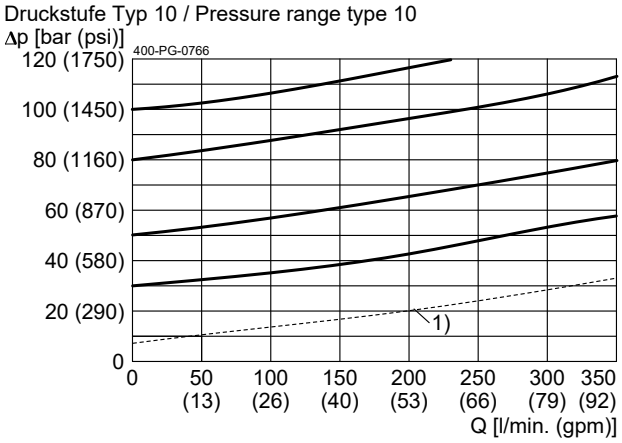

p_N = 100 bar (1400 psi)
1) Einsatzgrenze / Application limit

Δp = f (Q) Pressure drop-flow rate characteristic

Druckstufe Typ 16 / Pressure range type 16

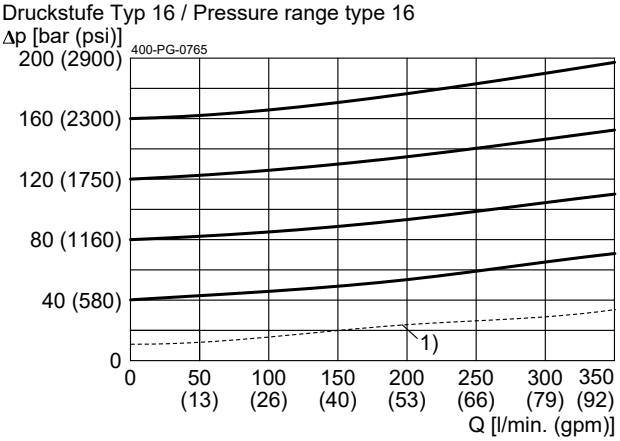

p_N = 160 bar (2300 psi)
1) Einsatzgrenze / Application limit

Δp = f (Q) Pressure drop-flow rate characteristic

Druckstufe Typ 25 / Pressure range type 25

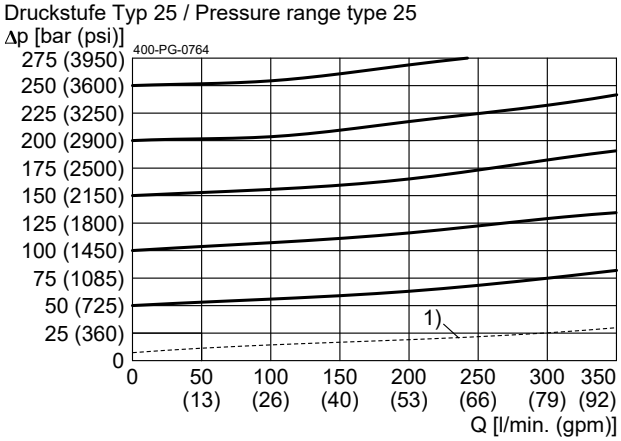

p_N = 250 bar (3600 psi)
1) Einsatzgrenze / Application limit

Δp = f (Q) Pressure drop-flow rate characteristic

Druckstufe Typ 35 / Pressure range type 35

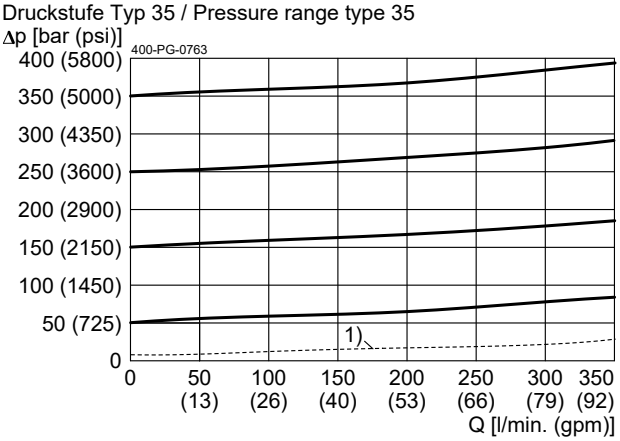

p_N = 350 bar (5000 psi)
1) Einsatzgrenze / Application limit

Δp = f (Q) Pressure drop-flow rate characteristic

Druckstufe Typ 42 / Pressure range type 42

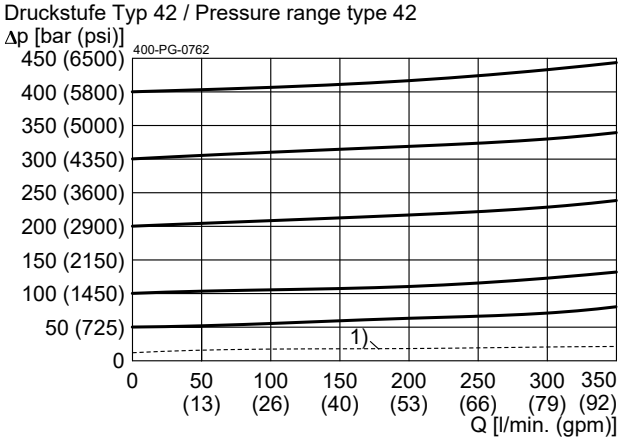

p_N = 420 bar (6000 psi)
1) Einsatzgrenze / Application limit

QL = f (l;Δp) Leakage flow rate

Gemessen 1 nach 2 / Messured 1 to 2

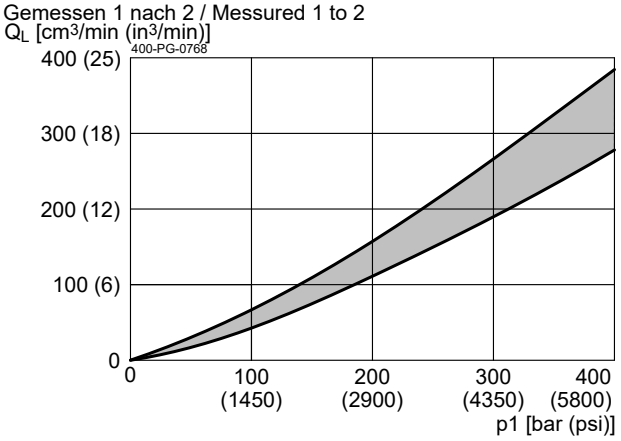

p2 = 0 bar (0 psi)
Vorsteuerung geschlossen / Pilot control closed

Dimensions and sectional view

Beispiel für die Masseinheit:
Exampel for the dimensional units:

0.79	= 0.79 mm	millimeter
(.031)	= 0.031"	inch

Version "S": Einstellschraube mit Innensechskant (Standard)
Version "S": adjustment screw with internal hexagon (standard)

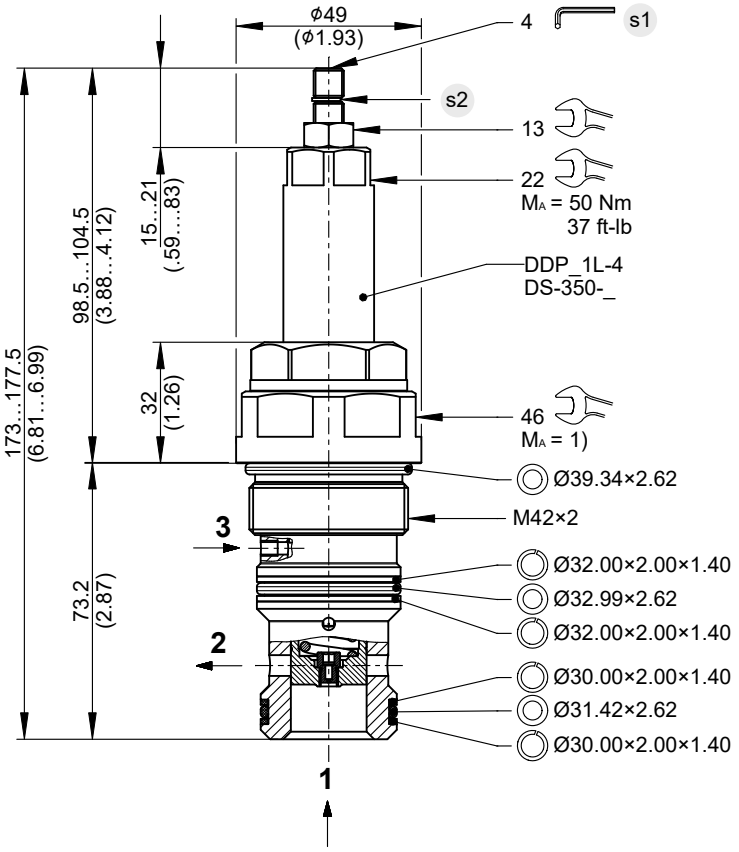

Version "H": Einstellschraube mit Handrad
Version "H": adjustment screw with handknob

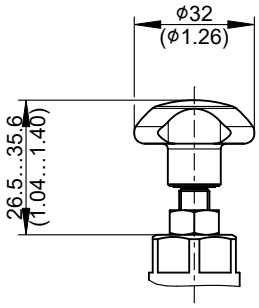

Einstellschraube mit Sicherungskappe
adjustment screw with tamper-proof cap

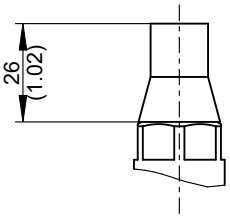

BUCHER hydraulics
WWW.SUMY.IR

Installation information

NOTE!
1) When fitting the screw-in cartridge valve, use the specified tightening torque. The value can be found in the chapter "Technical data".

NOTE!
Set the required pressure with the adjusting screw (s1). After you have set the valve, lock the adjusting screw (s1) with the lock nut.

NOTE!
Valve settings can be sealed by fitting the tamper-proof cap. To fit the cap, the snap ring (s2) has to be removed. Subsequent adjustment is only possible by destroying the tamper-proof cap.

NOTE!
The seals are not available individually. The seal kit order number can be found in the chapter "Technical data".

ATTENTION!
Only qualified personnel with mechanical skills may carry out any maintenance work. Generally, the only work that should ever be undertaken is to check, and possibly replace, the seals. When changing seals, oil or grease the new seals thoroughly before fitting them.

Ordering code

Z.B. D V P B - 2 - 16 - 04 - S _ - _

D	=	Druckventil / Pressure control valve
V	=	Vorgesteuert / Pilot operated
P	=	Patronenausführung / Cartridge design
A ... Q	=	Standard-Ausführung laut gültigem Datenblatt / Standard-Model according to valid data sheet
Z ... R	=	Spezial-Ausführung (auf Anfrage) / Special-Model (upon request)
2	=	Durchflussfunktion 2 (mit Federspeicher, ohne Rückschlag) / Flow function 2 (with spring, without check control port 3)
16	=	Nennweite 16 / Nominal size 16
04	=	Druckstufe 40 bar / …580 psi / Pressure range 40 bar / …580 psi
10	=	Druckstufe 100 bar / …1450 psi / Pressure range 100 bar / …1450 psi
16	=	Druckstufe 160 bar / …2300 psi / Pressure range 160 bar / …2300 psi
25	=	Druckstufe 250 bar / …3600 psi / Pressure range 250 bar / …3600 psi
35	=	Druckstufe 350 bar / …5000 psi / Pressure range 350 bar / …5000 psi
42	=	Druckstufe 420 bar / …6000 psi / Pressure range 420 bar / …6000 psi
S	=	Schraubendreher-Verstellung (Standard) / Screwdriver adjustment (standard)
H	=	Schraubendreher-Verstellung mit Handrad / Screwdriver adjustment with hand wheel
(blank)	=	NBR (Nitril-Butadien-Kautschuk / NBR) Dichtungen (Standard) / NBR (Nitrile Butadiene Rubber / NBR) seals (Standard)
V	=	FKM (Fluor-Kautschuk / VITON) Dichtungen / FKM (Fluoro Rubber / VITON) seals
		(Spezial-Dichtungen auf Anfrage) / (Special seals on request)
1 ... 9	=	Technische Änderungen (beim Bestellungen angeben) / Technical design changes (on ordering)
		W

IMPORTANT!
When using the tamper-proof cap (the adjustment seal) the seal must be ordered separately in plain language.

Related data sheets

Reference	Description
400-P-040011	Form tools
400-P-080111	Cavity EB
400-P-750115	Threaded port body GEBAA
400-P-260111	Relief function DDPC-1L-4-...

WWW.SUMY.IR

info.ch@bucherhydraulics.com **www.bucherhydraulics.com**

© 2025 by Bucher Hydraulics AG Frutigen, 3714 Frutigen, Switzerland

All rights reserved.
Data is provided for the purpose of product description only, and must not be construed as warranted characteristics in the legal sense. The information does not relieve users from the duty of conducting their own evaluations and tests. Because the products are subject to continual improvement, we reserve the right to amend the product specifications contained in this catalogue.

BUCHER hydraulics

WWW.SUMY.IR

Pressure valve
Sequence function

Q_{max} = 350 l/min, p_{max} = 420 bar
pilot operated, spool type, mechanically adjustable
Type series: DVPB-3-16-...

- Screw-in cartridge valve
- For cavity EB
- All external parts with zinc-nickel plating according to DIN EN ISO 19598
- Installation in threaded port body type GEBAA
- Seated pilot stage
- Very stable operation
- Sensitive adjustment
- With external spring space relief

Description

The pressure sequence valves, series DVPB-3-..., are size 16, screw-in valves with a seated pilot stage and an M42×2 mounting thread. They are designed on the proven sliding-spool principle. The spring chamber is internally drained to the secondary connection. The secondary connection should be preferably drained to the tank without pressure. To obtain a reliable pressure setting over the entire pressure range, the overall pressure range is divided into different pressure levels.These valves are mainly used in certain mobile and industrial applications to limit the system pressure. The pressure is set by means of an adjusting spindle. All external parts of the screw-in valves are zinc-nickel plated and are thus suitable for use in the harshest operating environments. For installation and further information, please refer to the section related data sheets.

Symbol

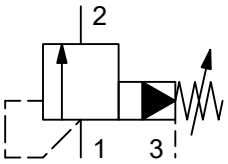

Technical data

General characteristics	Description, value, unit
Function group	Pressure valve
Function	Sequence function
Design	Screw-in cartridge valve

WWW.SUMY.IR

General characteristics	Description, value, unit
Controls	mechanically adjustable
Characteristic	pilot operated, spool type
Construction size	NG 16
Thread size	M42×2
Mounting attitude	unrestricted
Weight	0.95 kg
Cavity acc. ISO	fits into ISO 7789: 42-06-0-07
Cavity acc. factory standard	For cavity EB
Tightening torque steel	200 Nm
Tightening torque aluminium	200 Nm
Tightening torque tolerance	± 10 %
Minimum ambient temperature	- 30 °C
Maximum ambient temperature	+ 80 °C
Surface protection	All external parts with zinc-nickel plating according to DIN EN ISO 19598
Sealing material	see ordering code
Seal kit order number	NBR: DS-344-N / FKM: DS-344-V

Hydraulic characteristics	Description, value, unit
Maximum operating pressure	420 bar
Maximum flow rate	350 l/min
Flow direction	see symbol
Hydraulic fluid	HL and HLP mineral oil according to DIN 51 524; other fluids on request!
Minimum fluid temperature	- 30 °C
Maximum fluid temperature	+ 80 °C
Viscosity range	10 ... 650 mm^2/s (cSt)
Recommended viscosity range	15 ... 250 mm^2/s (cSt)
Minimum fluid cleanliness (cleanlineless class according to ISO 4406:1999)	class 20/18/15
Pressure adjustment range	pressure range 04: 1 turn = ca. 8 bar pressure range 10: 1 turn = ca. 21 bar pressure range 16: 1 turn = ca. 32 bar pressure range 25: 1 turn = ca. 51 bar pressure range 35: 1 turn = ca. 70 bar pressure range 42: 1 turn = ca. 80 bar

Performance graphs

measured with oil viscosity 33.0 mm²/s (cSt)

Δp = f (Q) Pressure drop-flow rate characteristic

Druckstufe Typ 04 / Pressure range type 04

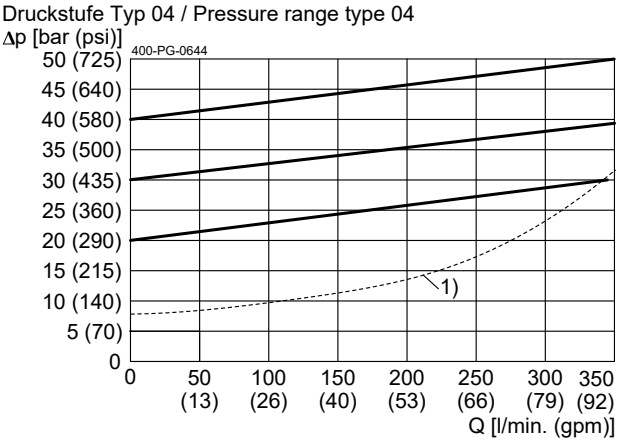

p_N = 40 bar (570 psi)
1) Einsatzgrenze / Application limit

Δp = f (Q) Pressure drop-flow rate characteristic

Druckstufe Typ 10 / Pressure range type 10

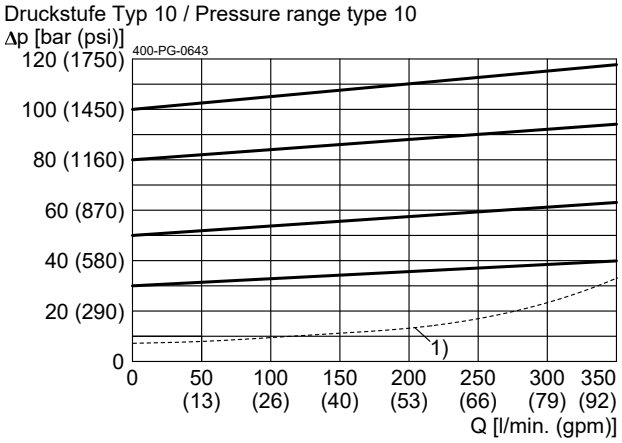

p_N = 100 bar (1400 psi)
1) Einsatzgrenze / Application limit

Δp = f (Q) Pressure drop-flow rate characteristic

Druckstufe Typ 16 / Pressure range type 16

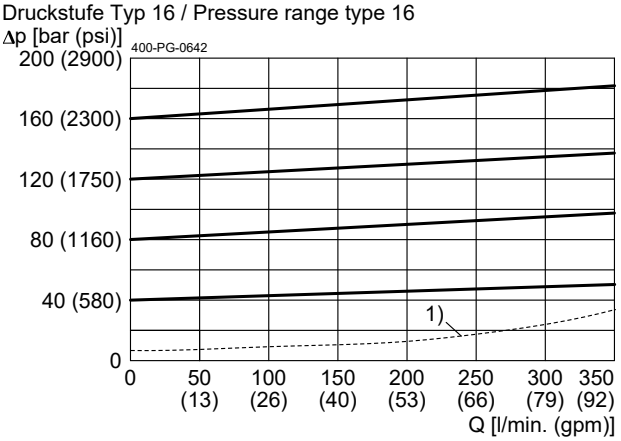

p_N = 160 bar (2300 psi)
1) Einsatzgrenze / Application limit

Δp = f (Q) Pressure drop-flow rate characteristic

Druckstufe Typ 25 / Pressure range type 25

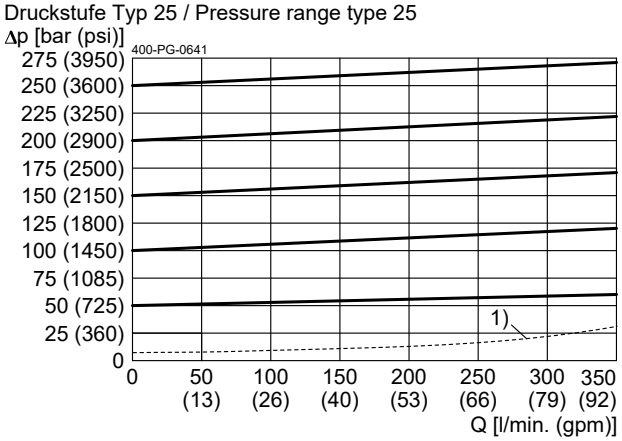

p_N = 250 bar (3600 psi)
1) Einsatzgrenze / Application limit

Δp = f (Q) Pressure drop-flow rate characteristic

Druckstufe Typ 35 / Pressure range type 35

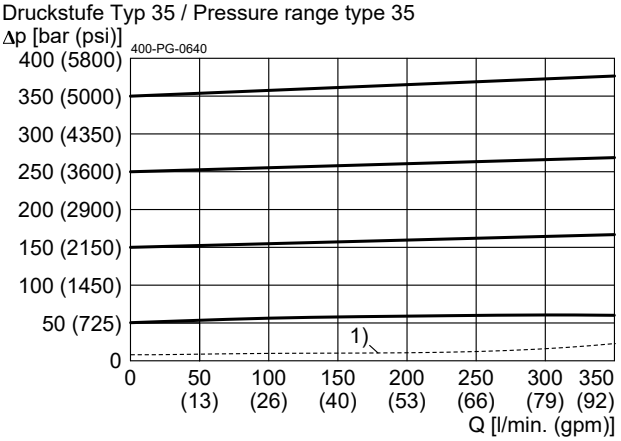

p_N = 350 bar (5000 psi)
1) Einsatzgrenze / Application limit

Δp = f (Q) Pressure drop-flow rate characteristic

Druckstufe Typ 42 / Pressure range type 42

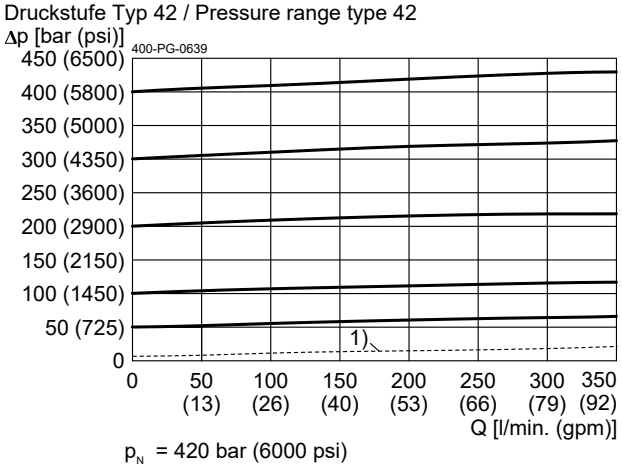

p_N = 420 bar (6000 psi)
1) Einsatzgrenze / Application limit

QL = f (Q;p) Leakage flow rate

Gemessen 1 nach 2 / Messured 1 to 2
Q_L [cm³/min (in³/min)]

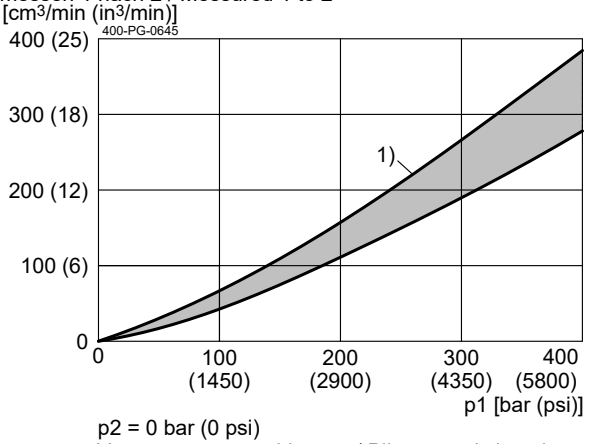

p2 = 0 bar (0 psi)
Vorsteuerung geschlossen / Pilot control closed

p = f (Q) Pressure-flow rate

Steuerölverbrauch in 3 / Control oil consumption at 3
Q [l/min. (gpm)]

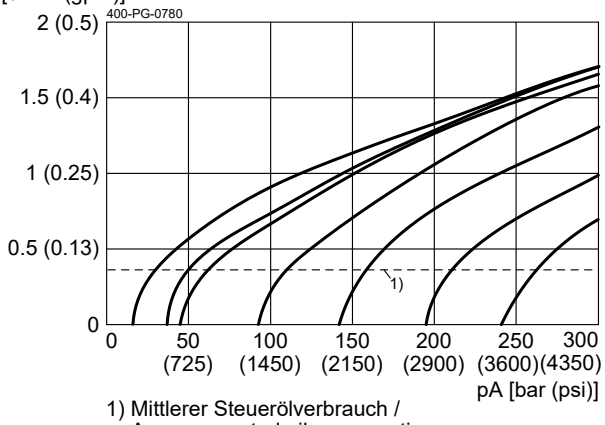

1) Mittlerer Steuerölverbrauch /
Average control oil consumption

Dimensions and sectional view

Beispiel für die Masseinheit:
Exampel for the dimensional units:

0.79	= 0.79 mm	millimeter
(.031)	= 0.031"	inch

Version "S": Einstellschraube mit Innensechskant (Standard)
Version "S": adjustment screw with internal hexagon (standard)

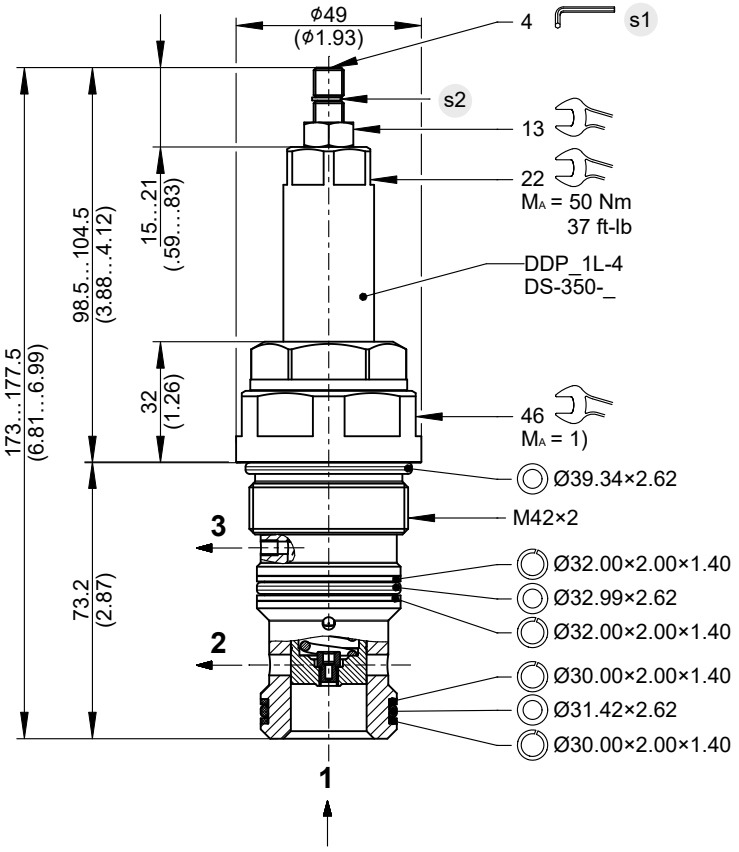

Version "H": Einstellschraube mit Handrad
Version "H": adjustment screw with handknob

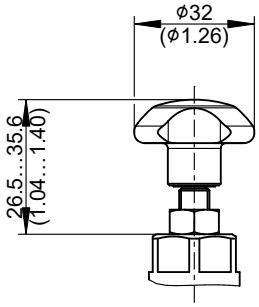

Einstellschraube mit Sicherungskappe
adjustment screw with tamper-proof cap

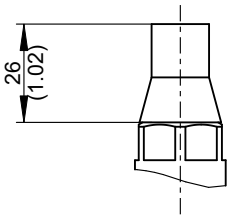

BUCHER hydraulics
WWW.SUMY.IR

Installation information

NOTE!
1) When fitting the screw-in cartridge valve, use the specified tightening torque. The value can be found in the chapter "Technical data".

NOTE!
Set the required pressure with the adjusting screw (s1). After you have set the valve, lock the adjusting screw (s1) with the lock nut.

NOTE!
Valve settings can be sealed by fitting the tamper-proof cap. To fit the cap, the snap ring (s2) has to be removed. Subsequent adjustment is only possible by destroying the tamper-proof cap.

NOTE!
The seals are not available individually. The seal kit order number can be found in the chapter "Technical data".

ATTENTION!
Only qualified personnel with mechanical skills may carry out any maintenance work. Generally, the only work that should ever be undertaken is to check, and possibly replace, the seals. When changing seals, oil or grease the new seals thoroughly before fitting them.

Ordering code

Ex. D V P B - 3 - 16 - 04 - S _ - _

D	=	Pressure control valve
V	=	Poppet type
P	=	Cartridge design
A ... Q	=	Standard model according to valve data sheet
Z ... R	=	Special model (upon request)
3	=	Control type 3 (with external spring space drain)
16	=	Nominal size 16
04	=	Pressure range 40 bar / …580 psi
10	=	Pressure range 100 bar / …1450 psi
16	=	Pressure range 160 bar / …2300 psi
25	=	Pressure range 250 bar / …3600 psi
35	=	Pressure range 350 bar / …5000 psi
42	=	Pressure range 420 bar / …6000 psi
S	=	Adjustment screw with internal hexagon **(standard)**
H	=	Adjustment screw with hand knob
(blank)	=	NBR (Nitril-Butadien-Kautschuk / NBR) seals **(standard)**
V	=	FKM (Fluor-Kautschuk / VITON) seals
		(Special seals on request)
1 ... 9	=	Technical design (on request)
		W

IMPORTANT!
When ordering the tamper-proof cap (the adjustment seal), it must be ordered separately in plain language.

Related data sheets

Reference	Description
400-P-040011	Form tools
400-P-080111	Cavity EB
400-P-750115	Threaded port body GEBAA
400-P-260111	Relief function DDPC-1L-4-...

info.ch@bucherhydraulics.com **www.bucherhydraulics.com**

© 2025 by Bucher Hydraulics AG Frutigen, 3714 Frutigen, Switzerland

All rights reserved.
Data is provided for the purpose of product description only, and must not be construed as warranted characteristics in the legal sense. The information does not relieve users from the duty of conducting their own evaluations and tests. Because the products are subject to continual improvement, we reserve the right to amend the product specifications contained in this catalogue.

Pressure-Relief Cartridge Valve, Size 4

Q_{max} = 20 l/min (5.3 gpm), p_{max} = 500 bar (7100 psi)
Seated design, direct acting
Series UVP 4…

- Compact design for cavity type according to Bucher standard – M20x1.5
- 5 different nominal pressure ranges available
- Leak-free when closed
- Hardened, polished seat section and cone
- All exposed parts with zinc-nickel plating

1 Description

Series UVP 4… pressure-relief valves are size 4, high performance screw-in cartridges with an M20x1.5 mounting thread. They are direct-acting seat valves. The straightforward design delivers an outstanding price/performance ratio and good pressure drop - flow rate characteristics. In order to obtain a good pressure adjustment over the entire pressure range, the total pressure range is subdivided into 5 pressure stages.

A pressure stage corresponds to a certain spring for a settable maximum operating pressure. The cartridges can be fitted in the cavity M20x1.5 according to Bucher standard. The pressure is set by means of an adjusting screw. To safeguard pressure settings, the adjusting screw can be sealed with a safety cap. These pressure-relief cartridges are used to limit the system pressure in mobile and industrial applications.

2 Symbol

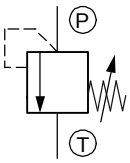

3 Technical data

General characteristics	Description, value, unit	
Designation	pressure-relief cartridge valve	
Design	seated design, direct acting	
Mounting method	screw-in cartridge – M20x1.5	
Tightening torque	40 Nm ± 10 %	(30 ft-lbs ± 10 %)
Size	size 4	
Weight	0.13 kg	(0.28 lbs)
Mounting attitude	unrestricted	
Ambient temperature range	-25 °C … +80 °C	(-13 °F … +176 °F)
Surface corrosion protection	all exposed parts with zinc-nickel plating	

Hydraulic characteristics		Description, value, unit	
Maximum operating pressure [1]		500 bar	(7100 psi)
Maximum flow rate			
	seat diameter Ø 4.0 mm	20 l/min	(5.3 gpm)
	seat diameter Ø 2.5 mm	10 l/min	(2.6 gpm)
Flow direction		P → T, see symbols	
Nominal pressure ranges	Ø 2.5	10…100 bar	(140…1450 psi)
	Ø 4.0	10…140 bar	(140…2030 psi)
	Ø 4.0	141…200 bar	(2045…2900 psi)
	Ø 2.5	201…350 bar	(2915…5076 psi)
	Ø 2.5	351…500 bar	(5090…7100 psi)
Adjustment change	Nominal pressure range 100	10…100 bar: 1 turn ≅ 30 bar	(435 psi)
	Nominal pressure range 140	10…140 bar: 1 turn ≅ 60 bar	(870 psi)
	Nominal pressure range 200	141…200 bar: 1 turn ≅ 95 bar	(1377 psi)
	Nominal pressure range 350	201…350 bar: 1 turn ≅ 150 bar	(2175 psi)
	Nominal pressure range 500	351…500 bar: 1 turn ≅ 240 bar	(3480 psi)
Opening pressure		opening pressure is set at a flow rate of 0.3 l/min setting tolerance: 0…14 bar	(0…200 psi)
Hydraulic fluid		HL and HLP mineral oil to DIN 51 524; for other fluids, please contact BUCHER	
Hydraulic fluid temperature range		-25 °C … +80 °C	(-13 °F … +176 °F)
Temperature rating of seals	NBR	-25 °C … +100 °C	(-13 °F … +212 °F)
	FKM	-20 °C … +200 °C	(-4 °F … +392 °F)
	MIL	-55 °C … +80 °C	(-67 °F … +176 °F)
Viscosity range		10…650 mm²/s (cSt), recommended 15...250 mm²/s (cSt)	
Minimum fluid cleanliness Cleanliness class to ISO 4406 : 1999		class 20/18/15	

ATTENTION!
[1] Any tank pressure acting at port T is additive to the pressure setting at port P.

4 Performance graphs

measured with oil viscosity 33 mm²/s (cSt)

Seat diameter = Ø 4.0 mm

Δp = f (Q) Pressure drop - Flow rate characteristic

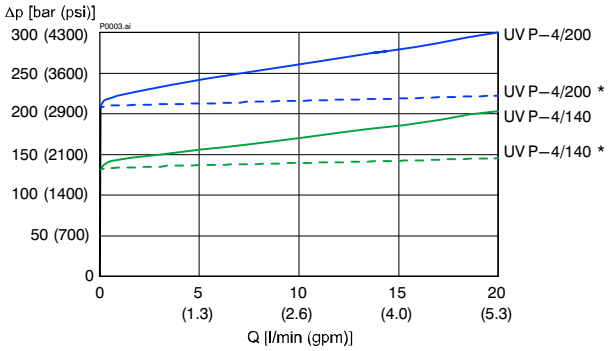

* = with opening disc for an improved characteristic curve.
(on request also available for seat diameter Ø2.5 mm)

Seat diameter = Ø 2.5 mm

Δp = f (Q) Pressure drop - Flow rate characteristic

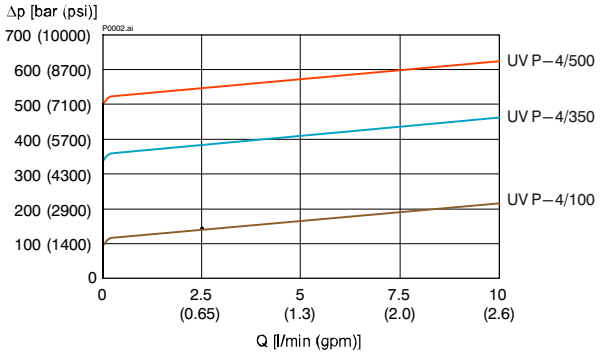

5 Dimensions & sectional view

Example for the dimensional units:
0.79 = 0.79 mm [millimeter]
(.031) = 0.031“ [inch]

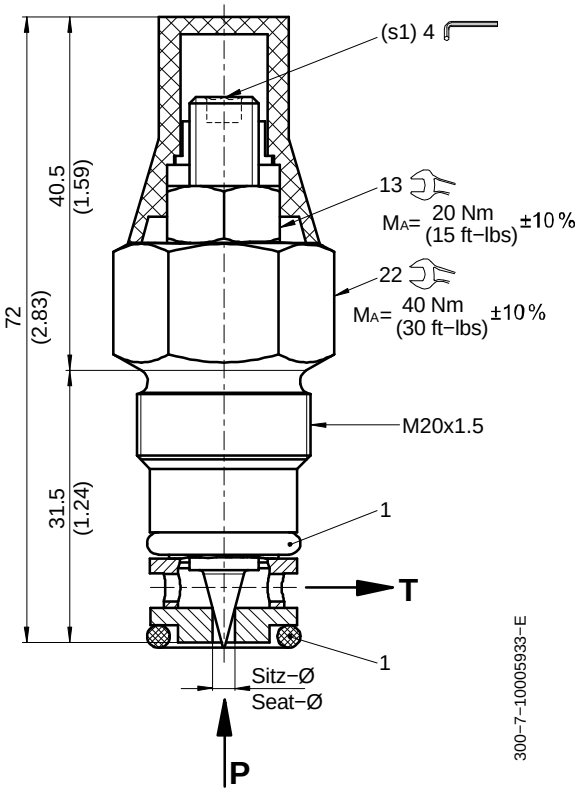

6 Installation information

IMPORTANT!
When fitting the cartridges, use the specified tightening torque. Set the required pressure with the adjusting screw (s_1). After you have set the valve, lock the adjusting screw with the lock nut.

ATTENTION!
Only qualified personnel with mechanical skills may carry out any maintenance work. Generally, the only work that should ever be undertaken is to check, and possibly replace, the seals. When changing seals, oil or grease the new seals thoroughly before fitting them.

IMPORTANT!
Valve settings can be sealed by fitting the safety cap. If the cartridge is ordered with factory setting, it comes with an orange safety cap. Subsequent adjustment is only possible by destroying de security cap. The yellow safety cap, which is supplied loose, marks a client-side setting.

Item	Qty.	Description	
1	2	O-Ring	∅ 12.37 x 2.62

IMPORTANT!
Item No. 3000300447 = seal kit NBR (Nitril)
Item No. 3000300445 = seal kit FKM (Viton)
Item No. 3000307760 = seal kit MIL (low temp.)

7 Ordering code

Ex. UVP 4 / 100 / N / 50 / _

UVP = pressure-relief cartridge valve
4 = size 4
100 = pressure range 10…100 bar (seat Ø2.5)
140 = pressure range 10…140 bar (seat Ø4.0)
200 = pressure range 141…200 bar (seat Ø4.0)
350 = pressure range 201…350 bar (seat Ø2.5)
500 = pressure range 351…500 bar (seat Ø2.5)
N = NBR (Nitrile) seals (**standard**)
V = FKM (Viton) seals
T = MIL (low temperature) seals
(special seals - please contact BUCHER)
... = Factory pressure setting
O = without specific factory pressure setting
(blank) = without opening disc
S = with opening disc (only for seat diameter Ø4.0 mm)

8 Cartridge cavity

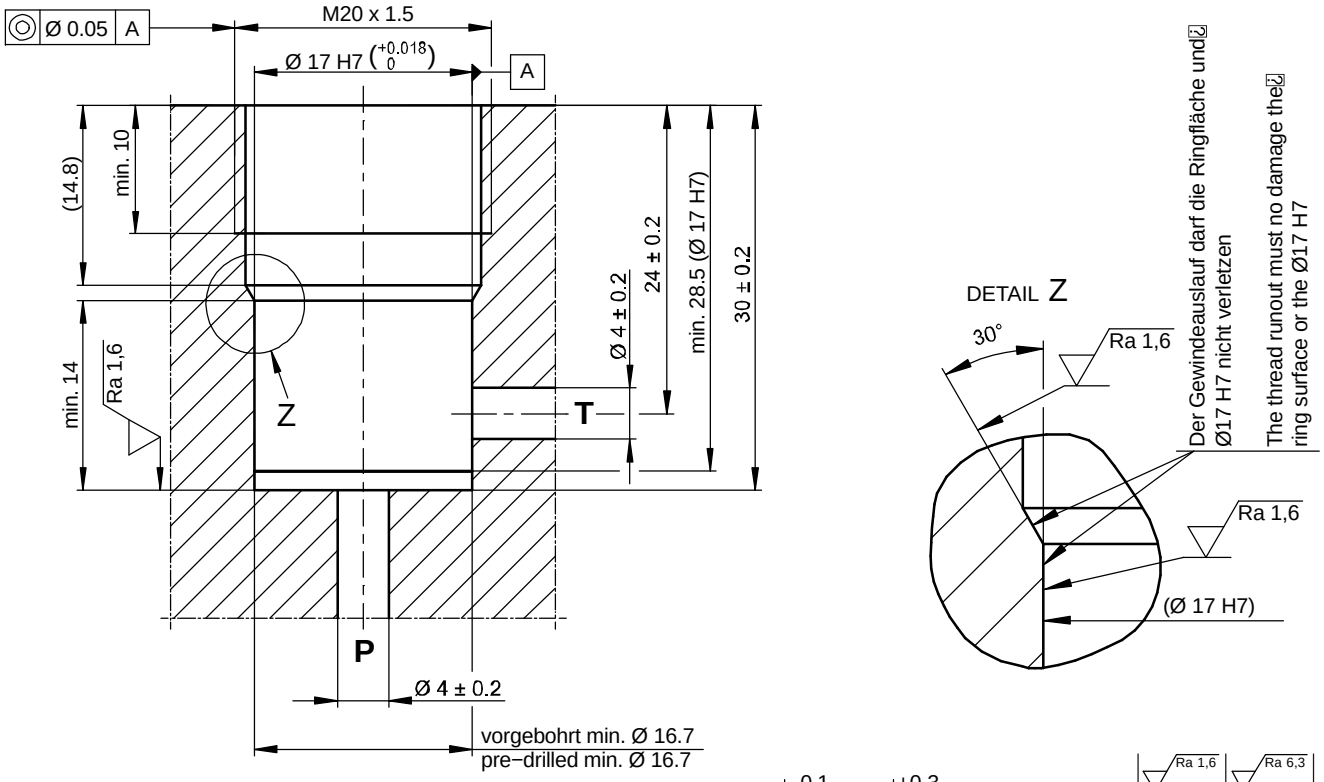

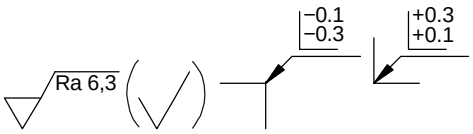

	Ra 1,6	Ra 6,3
Rauheitsklasse Roughness class	N7	N9
R_z [µm]	10	40

ATTENTION!
You must maintain the specified positional and diametral tolerances. To ensure trouble-free operation of the screw-in cartridges, we strongly recommend that pilot drilling, boring, reaming and cavity thread-cutting are always performed in one setup.

© 2021 by Bucher Hydraulics AG, CH-6345 Neuheim
All rights reserved.
Data is provided for the purpose of product description only, and must not be construed as warranted characteristics in the legal sense. The information does not relieve users from the duty of conducting their own evaluations and tests. Because the products are subject to continual improvement, we reserve the right to amend the product specifications contained in this catalogue.

Classification: 430.305.300.305.305

Pressure-Relief Cartridge Valve, Size 20

Q_{max} = 330 l/min (87 gpm), p_{max} = 450 bar (6400 psi)
Seated design, direct acting
Series DVP 20…

- Compact design for cavity type according to Bucher standard – M45x1.5
- Flat opening characteristic thanks 6 different nominal pressure ranges
- Leak-free when closed
- Low-noise operation thanks to integral damping piston
- High wear resistance becauce the piston is hardened
- All external parts with zinc-nickel coating according to DIN EN ISO 19598

1 Description

The pressure-relief valves, series DVP 20… are size 20, high performance screw-in cartridge valves with an M45x1.5 mounting thread. They are direct-acting seat valves. The straightforward design delivers an outstanding price/performance ratio and good pressure drop - flow rate characteristics. To cover the large pressure range and to realize a flat opening characteristic at the same time, 6 different nominal pressure ranges are available. A pressure stage corresponds to a certain spring for a settable maximum operating pressure. The cartridges can be fitted in the cavity M45x1.5 according to Bucher standard. The pressure is set by means of an adjusting screw. All external parts of the screw-in valves are zinc-nickel plated, and are thus suitable for use in the harshest operating environments. These pressure-relief cartridges are used to limit the system pressure in mobile and industrial applications.

2 Symbol

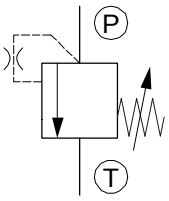

3 Technical data

General characteristics	Description, value, unit	
Designation	pressure-relief cartridge valve	
Design	seated design, direct acting	
Mounting method	screw-in cartridge – M45x1.5	
Tightening torque	170 Nm ± 10 %	(125 ft-lbs ± 10 %)
Size	size 20	
Weight	1.00 kg	(2.20 lbs)
Mounting attitude	unrestricted	
Ambient temperature range	-25 °C … +100 °C	(-13 °F … +212 °F)
Surface corrosion protection	All external parts with zinc-nickel coating according to DIN EN ISO 19598	

Hydraulic characteristics		Description, value, unit	
Maximum operating pressure [1]		450 bar	(6400 psi)
Max. pressure at port T		50 bar	(700 psi)
Maximum flow rate		330 l/min	(87 gpm)
Flow direction		P → T, see symbols	
Nominal pressure ranges	025	20…30 bar	(290…435 psi)
	050	30…65 bar	(435…942 psi)
	100	65…150 bar	(942…2175 psi)
	200	140…250 bar	(2030…3625 psi)
	300	200…320 bar	(2900…4641 psi)
	400	300…450 bar	(4351…6400 psi)
Adjustment change	Nominal pressure range 025	20…30 bar: 1 turn ≅ 4.5 bar	(65 psi)
	Nominal pressure range 050	30…65 bar: 1 turn ≅ 9.5 bar	(137 psi)
	Nominal pressure range 100	65…150 bar: 1 turn ≅ 22 bar	(319 psi)
	Nominal pressure range 200	140…250 bar: 1 turn ≅ 45 bar	(652 psi)
	Nominal pressure range 300	200…320 bar : 1 turn ≅ 70 bar	(1015 psi)
	Nominal pressure range 400	300…450 bar : 1 turn ≅ 107 bar	(1551 psi)
Hydraulic fluid		HL and HLP mineral oil to DIN 51 524; for other fluids, please contact BUCHER	
Hydraulic fluid temperature range		-25 °C … +80 °C	(-13 °F … +176 °F)
Viscosity range		10…650 mm^2/s (cSt), recommended 15...250 mm^2/s (cSt)	
Minimum fluid cleanliness Cleanliness class to ISO 4406 : 1999		class 20/18/15	

ATTENTION!
[1] Any tank pressure acting at port T is additive to the pressure setting at the main port P.

4 Performance graphs

measured with oil viscosity 33 mm^2/s (cSt)

Δp = f (Q) Pressure drop - Flow rate characteristic

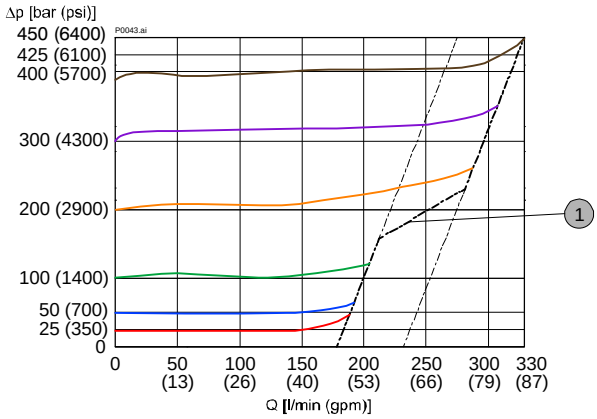

1	recommended max. flow

brown	DVP 20-B/400/…
lila	DVP 20-B/300/…
orange	DVP 20-B/200/…
green	DVP 20-B/100/…
blue	DVP 20-B/050/…
red	DVP 20-B/025/…

5 Dimensions & sectional view

Example for the dimensional units:
0.79 = 0.79 mm [millimeter]
(.031) = 0.031“ [inch]

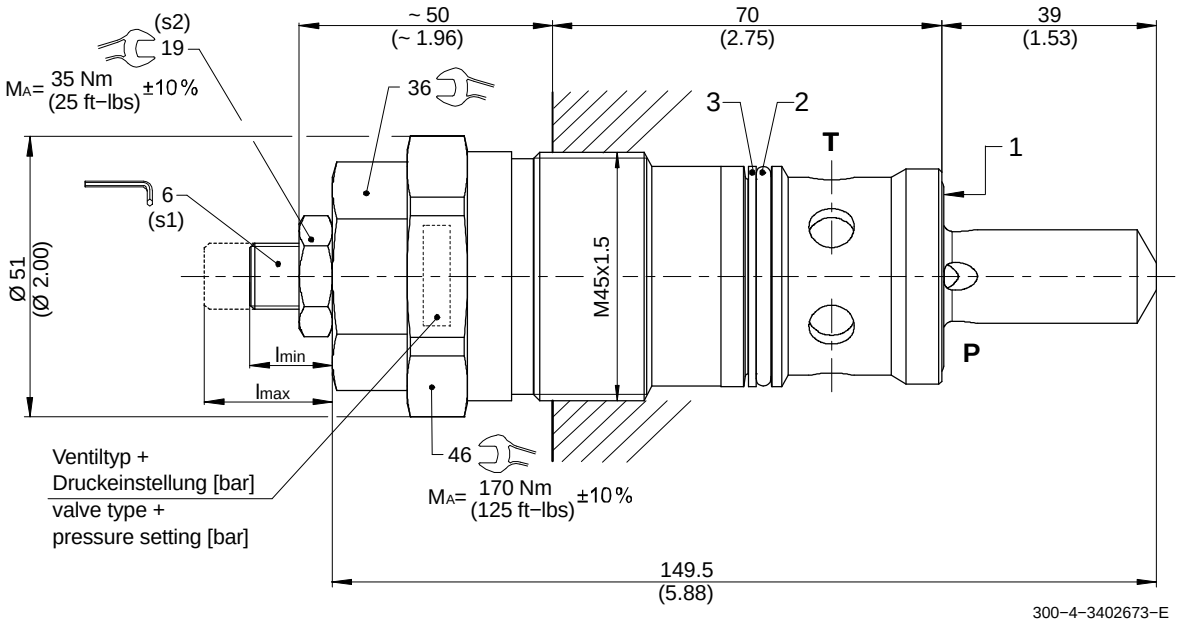

Type	l_{min}	l_{max}	max. turns
DVP 20-B / 025 /…	12.2 mm	15 mm	~ 2.2
DVP 20-B / 050 /…	10.5 mm	15 mm	~ 3.6
DVP 20-B / 100 /…	10.25 mm	15 mm	~ 3.8
DVP 20-B / 200 /…	12 mm	15 mm	~ 2.4
DVP 20-B / 300 /…	13.3 mm	15 mm	~ 2.1
DVP 20-B / 400 /…	13.2 mm	15 mm	~ 1.4

6 Installation information

IMPORTANT!
When fitting the cartridges, use the specified tightening torque. Set the required pressure with the adjusting screw (s1). After you have set the valve, lock the adjusting screw with the lock nut.

ATTENTION!
Only qualified personnel with mechanical skills may carry out any maintenance work. Generally, the only work that should ever be undertaken is to check, and possibly replace, the seals. When changing seals, oil or grease the new seals thoroughly before fitting them.

Item	Qty.	Description	
1	1	O-Ring	∅ 29.82 x 2.62
2	1	O-Ring	∅ 34.59 x 2.62
3	1	Backup ring	∅ 40.0 / 35.8 x 1.3

IMPORTANT!
Item No. 30003002350 = seal kit NBR (Nitril)
Item No. 30003002340 = seal kit FKM (Viton)

7 Ordering code

Ex. DVP 20 / B / 025 / N / ___

DVP	=	pressure-relief cartridge valve
20	=	size 20
B	=	model / version
025	=	pressure range 20…30 bar
050	=	pressure range 30…65 bar
100	=	pressure range 65…150 bar
200	=	pressure range 140…250 bar
300	=	pressure range 200…320 bar
400	=	pressure range 300…450 bar
N	=	NBR (Nitrile) seals **(standard)**
V	=	FKM (Viton) seals (special seals - please contact BUCHER)
...	=	factory-pressure setting

8 Cartridge cavity

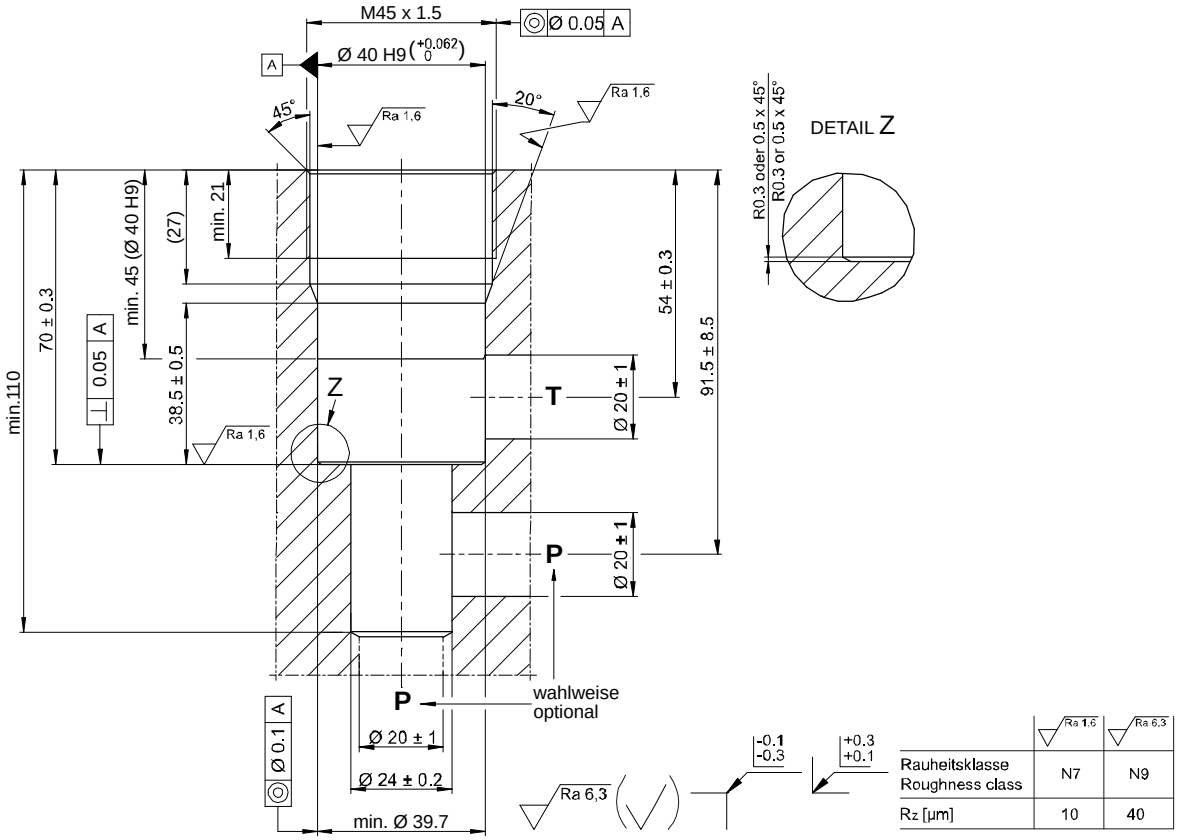

	Ra 1,6	Ra 6,3
Rauheitsklasse Roughness class	N7	N9
Rz [µm]	10	40

ATTENTION!
You must maintain the specified positional and diametral tolerances. To ensure trouble-free operation of the screw-in cartridges, we strongly recommend that pilot drilling, boring, reaming and cavity thread-cutting are always performed in one setup.

info.ch@bucherhydraulics.com www.bucherhydraulics.com

© 2022 by Bucher Hydraulics AG, CH-6345 Neuheim
All rights reserved.
Data is provided for the purpose of product description only, and must not be construed as warranted characteristics in the legal sense. The information does not relieve users from the duty of conducting their own evaluations and tests. Because the products are subject to continual improvement, we reserve the right to amend the product specifications contained in this catalogue.

Classification: 430.305.300.305.305

Pressure-Relief Cartridge Valve, Size 10

Q_{max} = 100 l/min, p_{max} = 330 bar
Leak-proof shut-off, CE type-approved acc. Pressure Equipment Directive 2014/68/EU
Series DDPSVA-1-10…

- Leak-proof shut-off from 1 → 2
- Extremely low leakage
- CE type-approved according Pressure Equipment Directive 2014/68/EU
- Security-sealed in the factory
- Compact design with M30x1.5 screw-in thread
- High flow rates
- All exposed parts with zinc-nickel plating

1 Description

Series DDPSVA-1-10 ... safety pressure-relief cartridges are size 10 valves with a M30x1.5 screw-in thread. They are direct acting with a seated design and feature extremely low leakage. These safety valves comply with the Pressure Equipment Directive 2014/68/EU and are set at the required response pressure and security-sealed. The preferred response pressures are 330, 315 and 100 bar and CE type-approved. Additional response pressures are available on application. These safety valves are typically used in hydraulic systems with pressure accumulators or pressure vessels. They safeguard the maximum allowable operating pressure by relieving oil from the protected line 1 to tank line 2. At Q_{max} (100 l/min), the back pressure in the tank line must not exceed 3 bar. All external parts of the cartridge are zinc-nickel plated according to DIN EN ISO 19 598 and are thus suitable for use in the harshest operating environments. If you intend to manufacture your own cavities, please refer to chapter 6 “cavity”.

2 Symbol

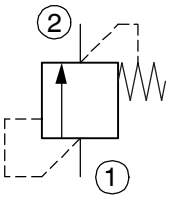

3 Technical data

General characteristics	Description, value, unit
Designation	pressure-relief cartridge valve
Design	leak-proof shut-off, CE type-approved according Pressure Equipment Directive 2014/68/EU
Mounting method	screw-in cartridge M30 x 1.5 – see chapter 6
Tightening torque	160 Nm ± 5 %
Size	nominal size 10
Weight	0.66 kg
Mounting attitude	unrestricted
Ambient temperature range	-30 °C … +70 °C

Hydraulic characteristics		Description, value, unit
Maximum operating pressure	- port 2 - port 1	3 bar [1)] 330 bar
Maximum flow rate		100 l/min
Response pressure		80 … 330 bar
Flow direction		1 → 2, see symbols
Hydraulic fluid		HL and HLP mineral oil to DIN 51 524; for other fluids, please contact BUCHER
Hydraulic fluid temperature range		-25 °C … +80 °C
Viscosity range		12…230 mm^2/s (cSt)
Minimum fluid cleanliness Cleanliness class to ISO 4406 : 1999		class 21/19/16

ATTENTION!
1) Any tank pressure acting at port 2 is additive to the pressure setting at the port 1.

4 Performance graphs

measured with oil viscosity 33 mm^2/s (cSt)

p = f (Q) Pressure - Flow rate characteristic

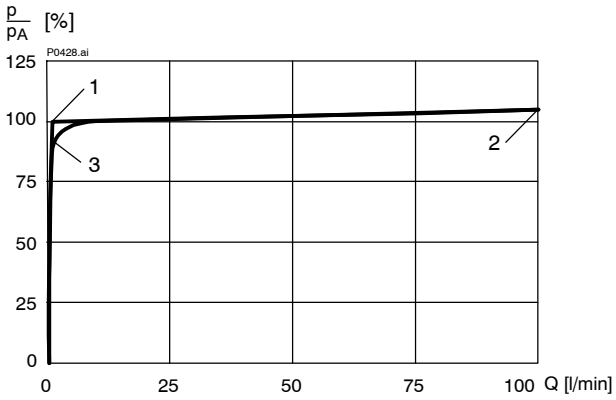

1.) Response pressure p_A
2.) Relieving pressure p_{ab} (maximum 10 % above p_A)
3.) Closing pressure p_s (maximum 15 % below p_A)

5 Dimensions & sectional view

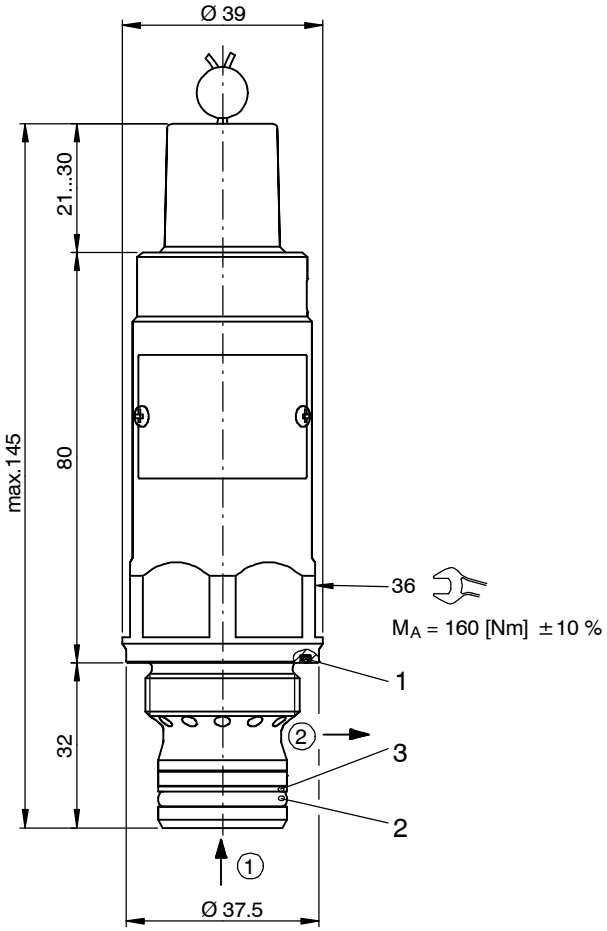

6 Cavity

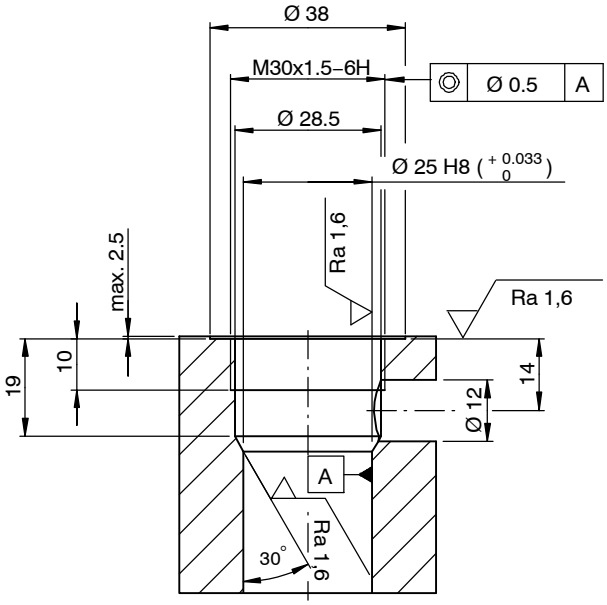

Cavity is manufactured with conventional tools (no form-tools available).

IMPORTANT!
We strongly recommend that pilot drilling, boring, reaming and cavity thread-cutting are performed in one setup.

7 Installation information

IMPORTANT!
When fitting the cartridges, use the specified tightening torque and refer to the instruction manual.

ATTENTION!
Only qualified personnel with mechanical skills may carry out any maintenance work. Generally, the only work that should ever be undertaken is to check, and possibly replace, the seals. When changing seals, oil or grease the new seals thoroughly before fitting them.

IMPORTANT!
These safety pressure-relief cartridges are security-sealed in the factory. If the sealing wire is damaged, the safety of the cartridges can no longer be guaranteed.

Seal kit NBR no. DS-478-N [2)]

Item	Qty.	Description
1	1	O-ring no. 026 ∅ 31,47 x 1,78 N90
2	1	O-ring no. 117 ∅ 20,29 x 2,62 N90
3	1	Backup ring ∅ 19,90 x 2,20 x 1,00 FI0751

IMPORTANT!
[2)] Seal kit with FKM (Viton) seals, no. DS-478-V

8 Ordering code

Ex. D D P SV A - 1 - 10 - 330 - _ - 1

D	=	pressure-control valve
D	=	direct acting
P	=	cartridge design
SV	=	safety valve
A ... Q	=	standard model - see relevant data sheets
Z ... R	=	special features - please contact BUCHER
1	=	pressure function 1 (pressure-relief)
10	=	nominal size 10
330	=	response pressure …330 bar
315	=	response pressure …315 bar
100	=	response pressure …100 bar (other pressure ranges - pleace consult BUCHER)
(blank)	=	NBR (Nitrile) seals (**standard**)
V	=	FKM (Viton) seals (special seals - please contact BUCHER)
1 ... 9	=	design stage (omit when ordering new units)

9 Related data sheets

Reference	Description
…	Certificate of conformity to notified body (according to module F) – on request

info.ch@bucherhydraulics.com www.bucherhydraulics.com

© 2020 by Bucher Hydraulics AG Frutigen, CH-3714 Frutigen
All rights reserved.
Data is provided for the purpose of product description only, and must not be construed as warranted characteristics in the legal sense. The information does not relieve users from the duty of conducting their own evaluations and tests. Because the products are subject to continual improvement, we reserve the right to amend the product specifications contained in this catalogue.

Classification: 430.305.300.305.320.360

BUCHER hydraulics
WWW.SUMY.IR

Pressure valve
Relief function

Q_{max} = 140 l/min, p_{max} = 450 bar
direct acting, poppet type, mechanically adjustable
Type series: DDPB-1C-10-...

- Screw-in cartridge valve
- For cavity DC
- All external parts with zinc-nickel plating according to DIN EN ISO 19598
- Installation in threaded port body type DC-12
- All ports are closed leak-free by means of a poppet design
- Thanks to a dynamic stroke aid, a favorable characteristic curve is achieved
- Very fast and stable response
- Suitable for use as preload valve or anti-shock valve
- Also available as stack valve

Description

The pressure relief valves, series DDP-1C-..., are size 10, direct acting, screw-in cartridge valves with an M24×1.5 mounting thread. The poppet seat design ensures that the valves are leak-tight. The spring chamber is internally drained to port B. Port B should preferably be connected to the tank. To obtain a reliable pressure setting over the entire pressure range, the overall pressure range is divided into different pressure levels. Each pressure range corresponds to a particular spring that allows a certain maximum operating pressure to be set. The pressure is set by means of an adjusting spindle. All external parts of the screw-in valves are zinc-nickel plated and are thus suitable for use in the harshest operating environments. These valves are mainly used in certain mobile and industrial applications to limit the system pressure. Please note that any tank or return-line pressures are additive to the setting. For self-assembly, please refer to the section related data sheets.

Symbol

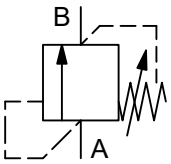

Technical data

General characteristics	Description, value, unit
Function group	Pressure valve
Function	Relief function
Design	Screw-in cartridge valve
Controls	mechanically adjustable
Characteristic	direct acting, poppet type
Construction size	NG 10
Thread size	M24×1,5
Mounting attitude	unrestricted
Weight	0.35 kg
Cavity acc. factory standard	For cavity DC
Tightening torque steel	100 Nm
Tightening torque aluminium	50 Nm
Tightening torque tolerance	± 10 %
Minimum ambient temperature	- 30 °C
Maximum ambient temperature	+ 80 °C
Surface protection	All external parts with zinc-nickel plating according to DIN EN ISO 19598
Sealing material	see ordering code
Seal kit order number	NBR: DS-207-N / FKM: DS-207-V

Hydraulic characteristics	Description, value, unit
Maximum operating pressure	450 bar
Restriction of the operating pressure	[1])
Maximum flow rate	140 l/min
Flow direction	see symbol
Hydraulic fluid	HL and HLP mineral oil according to DIN 51 524; other fluids on request!
Minimum fluid temperature	- 30 °C
Maximum fluid temperature	+ 80 °C
Viscosity range	10 ... 650 mm^2/s (cSt)
Recommended viscosity range	15 ... 250 mm^2/s (cSt)
Minimum fluid cleanliness (cleanlineless class according to ISO 4406:1999)	class 20/18/15
Minimum set pressure	10 bar
Maximum set pressure	450 bar
Pressure adjustment range	pressure range L: 10 ... 100 bar pressure range M: 80 ... 240 bar pressure range N: 180 ... 350 bar pressure range O: 300 ... 400 bar pressure range P: 350 ... 450 bar

NOTE!
[1]) Please note that any tank or return-line pressures acting at port B are additive to the pressure setting at port A.

Performance graphs

measured with oil viscosity 33.0 mm²/s (cSt)

Δp = f (Q) Pressure drop-flow rate characteristic

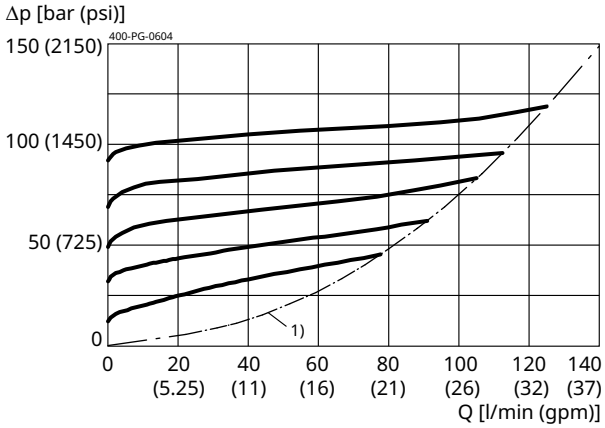

Version: DDP_-1C-10-SL
1) = Application limit

Δp = f (Q) Pressure drop-flow rate characteristic

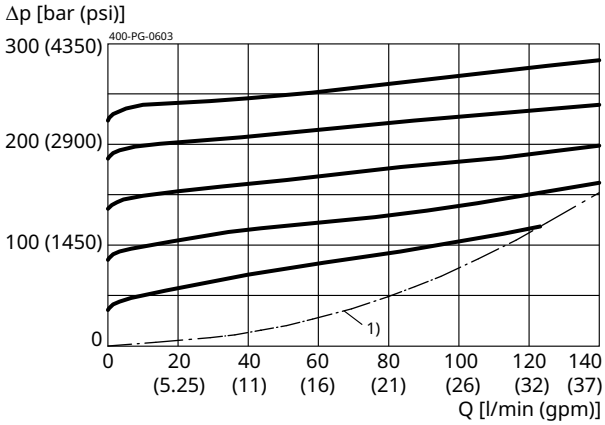

Version: DDP_-1C-10-SM
1) = Application limit

Δp = f (Q) Pressure drop-flow rate characteristic

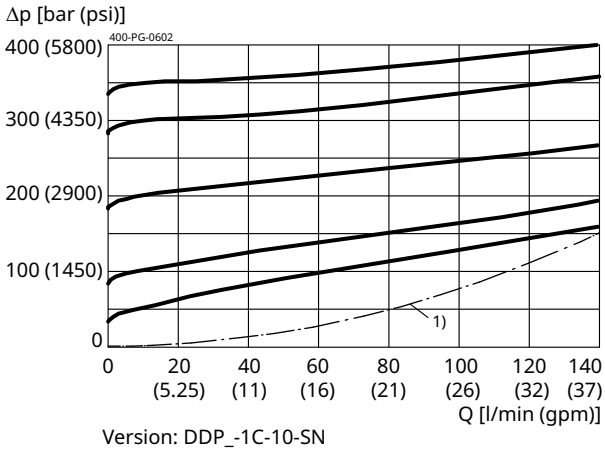

Version: DDP_-1C-10-SN
1) = Application limit

Δp = f (Q) Pressure drop-flow rate characteristic

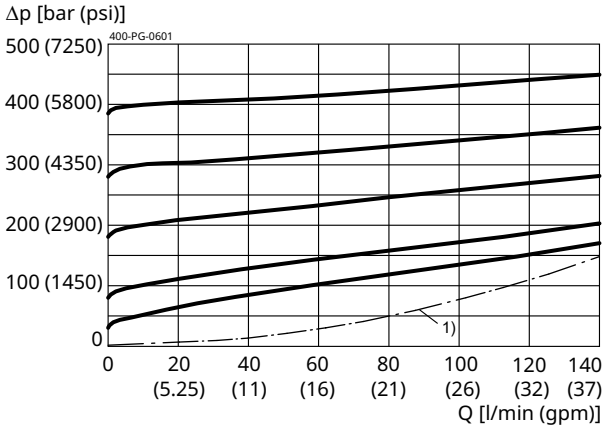

Version: DDP_-1C-10-SO
1) = Application limit

Δp = f (Q) Pressure drop-flow rate characteristic

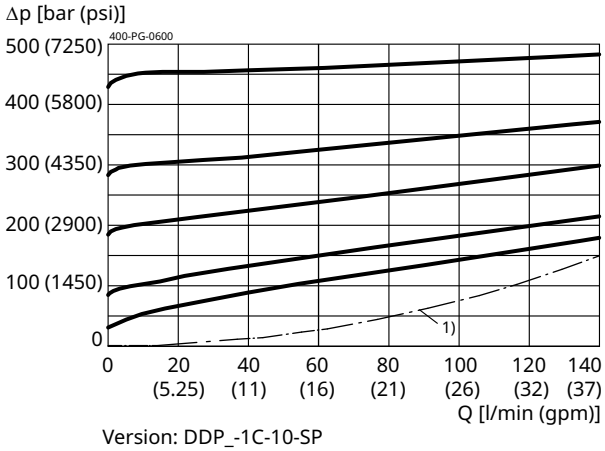

Version: DDP_-1C-10-SP
1) = Application limit

WWW.SUMY.IR

Dimensions and sectional view

Beispiel für die Masseinheit:
Example for the dimensional units:

0.79 = 0.79 mm millimeter
(.031) = 0.031" inch

Version "S": Einstellschraube *(Standard)*
Version "S": adjustment screw (standard)

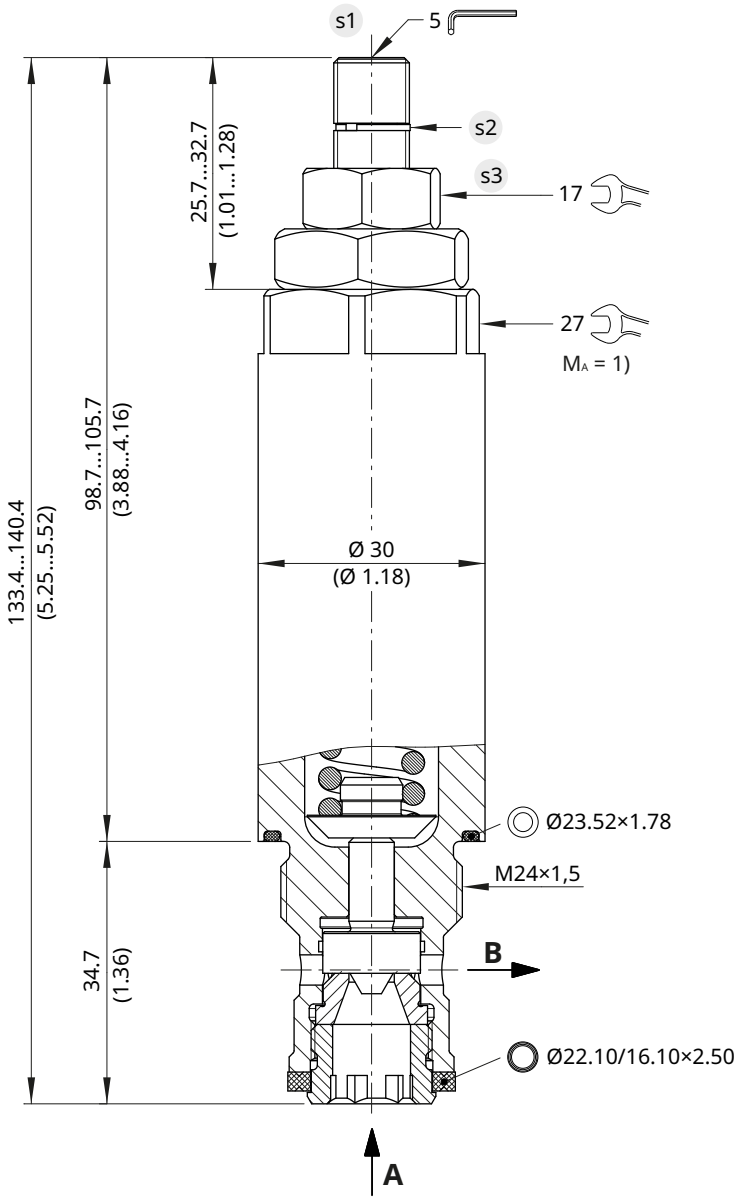

Version "H": Einstellschraube mit Handrad
Version "H": adjustment screw with handknob

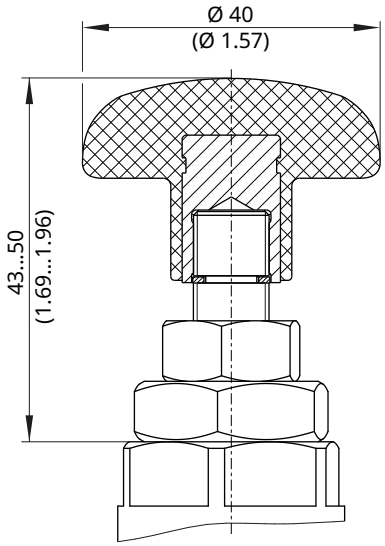

Einstellschraube mit Sicherungskappe
adjustment screw with tamper-proof cap

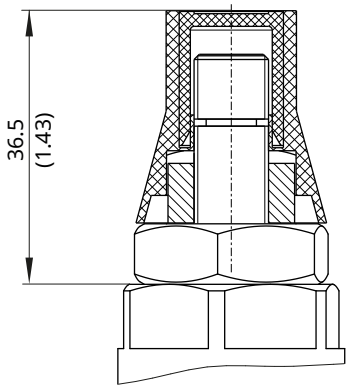

Installation information

ATTENTION!
Only qualified personnel with mechanical skills may carry out any maintenance work. Generally, the only work that should ever be undertaken is to check, and possibly replace, the seals. When changing seals, oil or grease the new seals thoroughly before fitting them.

NOTE!
Set the required pressure with the adjusting screw s1 . After you have set the valve, lock the adjusting screw s1 with the lock nut.

WWW.SUMY.IR

NOTE!
1) When fitting the screw-in cartridge valve, use the specified tightening torque. The value can be found in the chapter "Technical data".

NOTE!
Valve settings can be sealed by fitting the tamper-proof cap. To fit the cap, the snap ring s2 has to be removed. Subsequent adjustment is only possible by destroying the tamper-proof cap.

NOTE!
The seals are not available individually. The seal kit order number can be found in the chapter "Technical data".

Ordering code

Ex. D D P B - 1 C - 10 - S L _ - 2

D	=	pressure valve
D	=	relief-function, direct acting
P	=	cartridge design
A ... Q	=	standard model according to valid data sheet
Z ... R	=	special model (on request)
1	=	pressure relief with internal spring space relief
C	=	cavity type DC
10	=	nominal size 10
S	=	adjustment screw with internal hexagon **(standard)**
H	=	adjustment screw with hand knob
L	=	pressure range 10...100 bar / 145...1450 psi
M	=	pressure range 80...240 bar / 1160...3500 psi
N	=	pressure range 180...350 bar / 2600...5000 psi
O	=	pressure range 300...400 bar / 4350...5800 psi
P	=	pressure range 350...450 bar / 5000...6500 psi
(blank)	=	NBR (nitril-butadien-rubber / BUNA) seals **(standard)**
V	=	FKM (fluorocarbon rubber / VITON) seals (special seals on request)
1...9	=	technical design no. (omit by ordering)

NOTE!
When required the tamper-proof cap (seal) for the adjustment screw must be ordered separately in plain language.

Related data sheets

Reference	Description
400-P-040011	Form tools
400-P-060111	Cavity DC
400-P-740101	Threaded port body DC-12

info.ch@bucherhydraulics.com **www.bucherhydraulics.com**

© 2026 by Bucher Hydraulics AG Frutigen, 3714 Frutigen, Switzerland

All rights reserved.
Data is provided for the purpose of product description only, and must not be construed as warranted characteristics in the legal sense. The information does not relieve users from the duty of conducting their own evaluations and tests. Because the products are subject to continual improvement, we reserve the right to amend the product specifications contained in this catalogue.

BUCHER hydraulics
WWW.SUMY.IR

Pressure valve
Sequence function

Q_{max} = 140 l/min, p_{max} = 450 bar
direct acting, poppet type, mechanically adjustable
Type series: DDPB-3D-10-...

- Screw-in cartridge valve
- For cavity DD
- All external parts with zinc-nickel plating according to DIN EN ISO 19598
- Installation in threaded port body type DDY-12
- All ports are closed leak-free by means of a poppet design
- Thanks to a dynamic stroke aid, a favorable characteristic curve is achieved
- The external oil drain allows pressure setting without interference by the secondary pressure
- Very fast and stable response
- Suitable for use as preload valve or anti-shock valve
- Also available as stack valve

Description

The pressure relief valves, series DDP_-3D-..., are size 10, direct acting, screw-in cartridge valves with an M24×1.5 mounting thread. The poppet seat design ensures that the valves are leak-tight. The spring chamber is externally drained via port Y. Back pressure applied to port B does not influence the valve relief setting. To obtain a reliable pressure setting over the entire pressure range, the overall pressure range is divided into different pressure levels. Each pressure range corresponds to a particular spring that allows a certain maximum operating pressure to be set. The pressure is set by means of an adjusting spindle. All external parts of the screw-in valves are zinc-nickel plated and are thus suitable for use in the harshest operating environments. These valves are mainly used in certain mobile and industrial applications to limit the system pressure. Thanks to the external oil drain, the actuator port can be pressurized without affecting the setting. For self-assembly, please refer to the section related data sheets.

Symbol

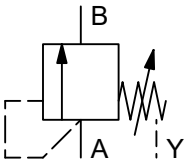

WWW.SUMY.IR

Technical data

General characteristics	Description, value, unit
Function group	Pressure valve
Function	Sequence function
Design	Screw-in cartridge valve
Controls	mechanically adjustable
Characteristic	direct acting, poppet type
Construction size	NG 10
Thread size	M24×1,5
Mounting attitude	unrestricted
Weight	0.35 kg
Cavity acc. factory standard	For cavity DD
Tightening torque steel	100 Nm
Tightening torque aluminium	50 Nm
Tightening torque tolerance	± 10 %
Minimum ambient temperature	- 30 °C
Maximum ambient temperature	+ 80 °C
Surface protection	All external parts with zinc-nickel plating according to DIN EN ISO 19598
Sealing material	see ordering code
Seal kit order number	NBR: DS-207-N / FKM: DS-207-V

Hydraulic characteristics	Description, value, unit
Maximum operating pressure	450 bar
Maximum flow rate	140 l/min
Flow direction	see symbol
Hydraulic fluid	HL and HLP mineral oil according to DIN 51 524; other fluids on request!
Minimum fluid temperature	- 30 °C
Maximum fluid temperature	+ 80 °C
Viscosity range	10 ... 650 mm^2/s (cSt)
Recommended viscosity range	15 ... 250 mm^2/s (cSt)
Minimum fluid cleanliness (cleanlineless class according to ISO 4406:1999)	class 20/18/15
Minimum set pressure	10 bar
Maximum set pressure	450 bar
Pressure adjustment range	pressure range L: 10 ... 100 bar pressure range M: 80 ... 240 bar pressure range N: 180 ... 350 bar pressure range O: 300 ... 400 bar pressure range P: 350 ... 450 bar

Performance graphs

measured with oil viscosity 33.0 mm²/s (cSt)

Δp = f (Q) Pressure drop-flow rate characteristic

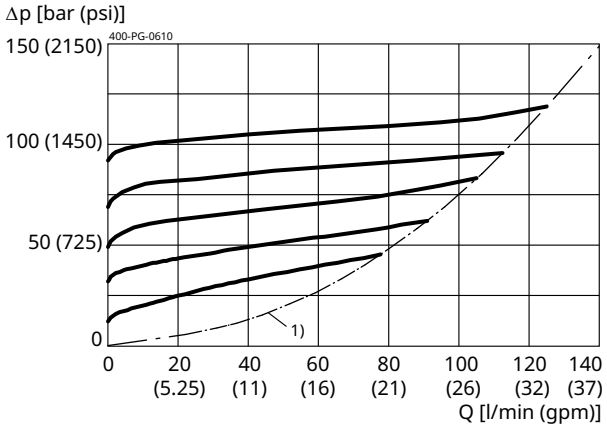

Version: DDP_-3D-10-SL
1) = Application limit

Δp = f (Q) Pressure drop-flow rate characteristic

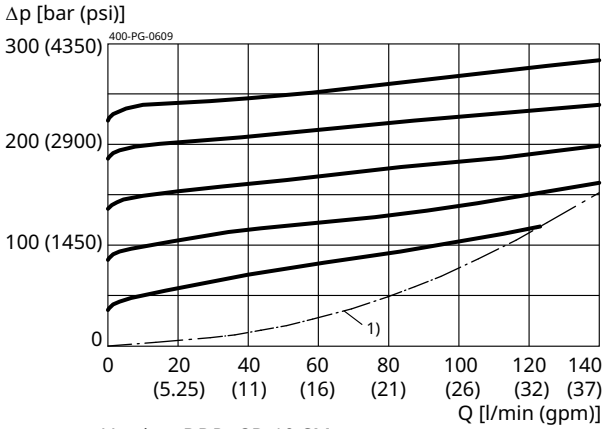

Version: DDP_-3D-10-SM
1) = Application limit

Δp = f (Q) Pressure drop-flow rate characteristic

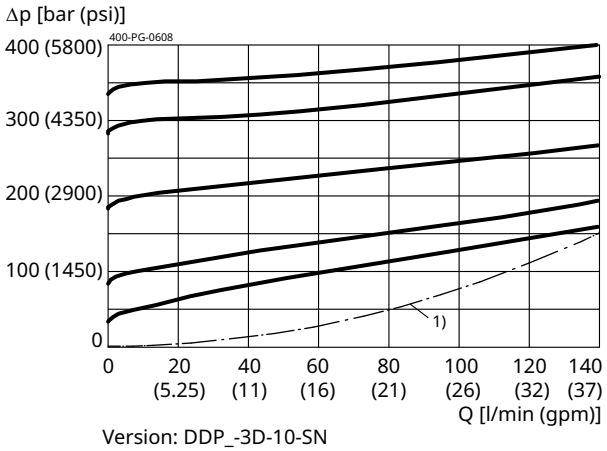

Version: DDP_-3D-10-SN
1) = Application limit

Δp = f (Q) Pressure drop-flow rate characteristic

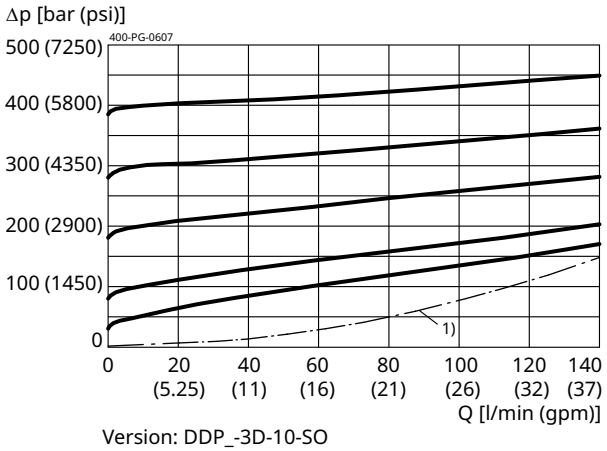

Version: DDP_-3D-10-SO
1) = Application limit

Δp = f (Q) Pressure drop-flow rate characteristic

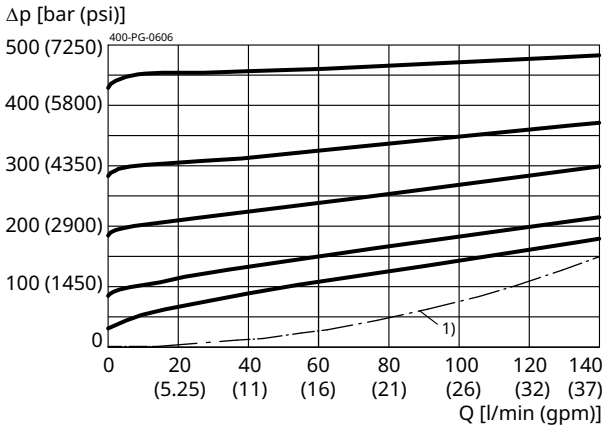

Version: DDP_-3D-10-SP
1) = Application limit

QL = f (l;Δp) Leakage flow rate

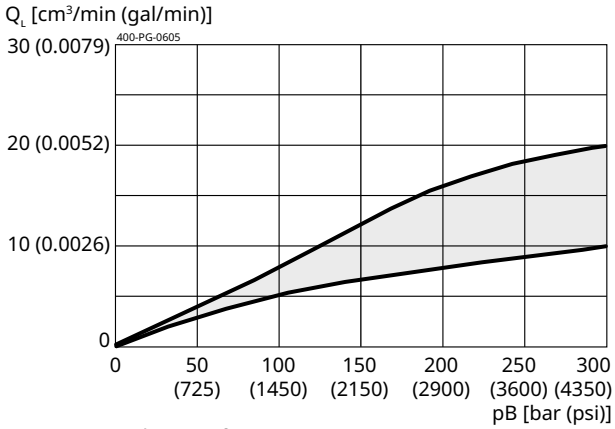

Leakage Q_L from B to Y

Dimensions and sectional view

Beispiel für die Masseinheit:
Example for the dimensional units:

0.79 = 0.79 mm millimeter
(.031) = 0.031'' inch

Version "S": Einstellschraube *(Standard)*
Version "S": adjustment screw (standard)

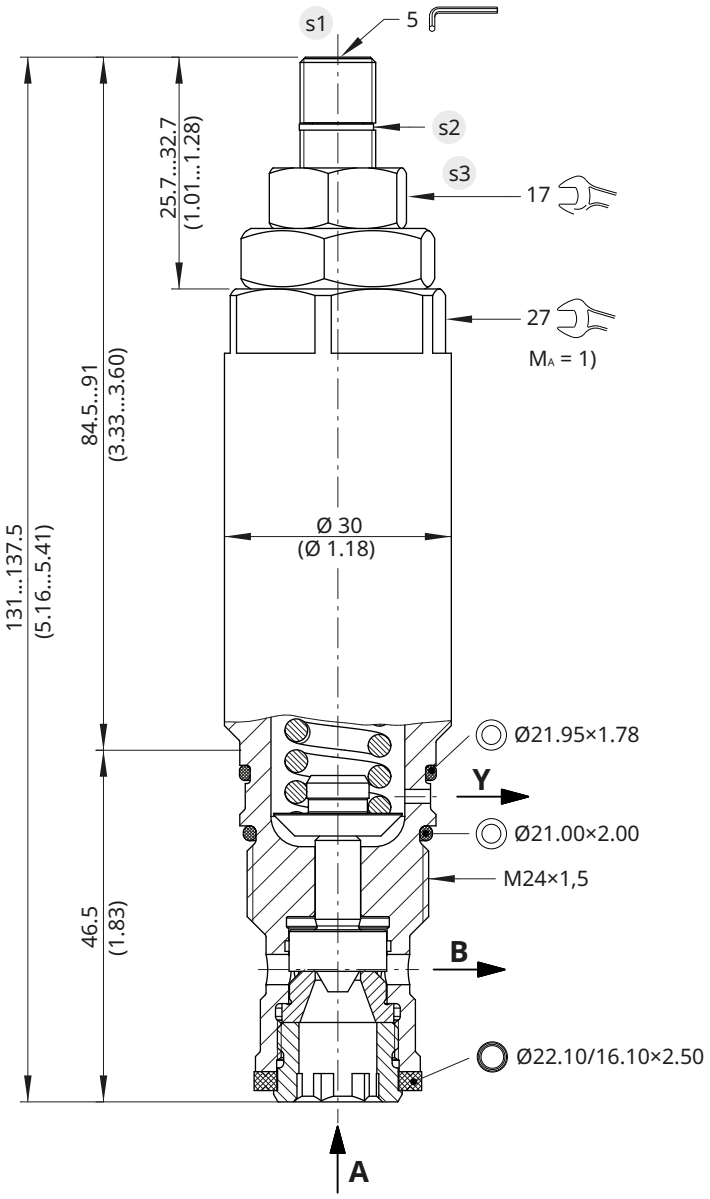

Version "H": Einstellschraube mit Handrad
Version "H": adjustment screw with handknob

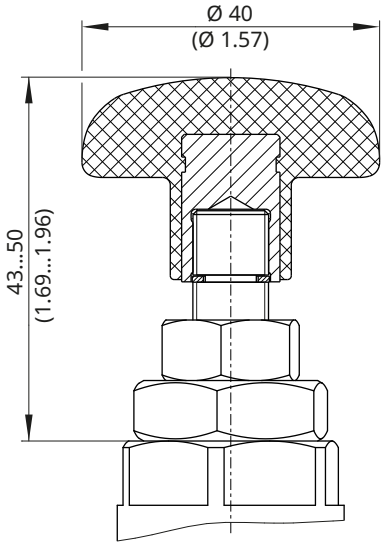

Einstellschraube mit Sicherungskappe
adjustment screw with tamper-proof cap

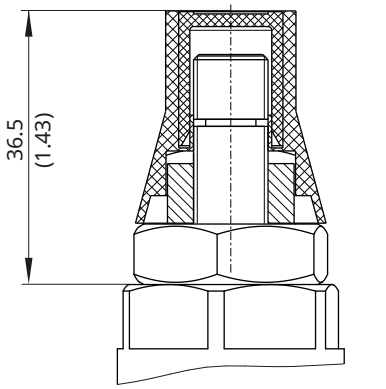

Installation information

ATTENTION!
Only qualified personnel with mechanical skills may carry out any maintenance work. Generally, the only work that should ever be undertaken is to check, and possibly replace, the seals. When changing seals, oil or grease the new seals thoroughly before fitting them.

NOTE!
Set the required pressure with the adjusting screw s1 . After you have set the valve, lock the adjusting screw s1 with the lock nut.

NOTE!
1) When fitting the screw-in cartridge valve, use the specified tightening torque. The value can be found in the chapter "Technical data".

NOTE!
Valve settings can be sealed by fitting the tamper-proof cap. To fit the cap, the snap ring s2 has to be removed. Subsequent adjustment is only possible by destroying the tamper-proof cap.

NOTE!
The seals are not available individually. The seal kit order number can be found in the chapter "Technical data".

Ordering code

z.B. D D P B - 3 D - 10 - S L _ - 2

D	=	pressure valve
D	=	relief-function, direct acting
P	=	cartridge design
A ... Q	=	standard model according to valid data sheet
Z ... R	=	special model (on request)
3	=	pressure function 3 (Y-outlet external)
D	=	cavity type DD
10	=	nominal size 10
S	=	adjustment screw with internal hexagon **(standard)**
H	=	adjustment screw with hand knob
L	=	pressure range 10...100 bar / 145...1450 psi
M	=	pressure range 80...240 bar / 1160...3500 psi
N	=	pressure range 180...350 bar / 2600...5000 psi
O	=	pressure range 300...400 bar / 4350...5800 psi
P	=	pressure range 350...450 bar / 5000...6500 psi
(blank)	=	NBR (nitril-butadien-rubber / BUNA) seals **(standard)**
V	=	FKM (fluorocarbon rubber / VITON) seals (special seals on request)
1...9	=	technical design no. (omit by ordering)

NOTE!
When required the tamper-proof cap (seal) for the adjustment screw must be ordered separately in plain language.

Related data sheets

Reference	Description
400-P-040011	Form tools
400-P-060121	Cavity DD
400-P-740112	Threaded port body DDY-12

info.ch@bucherhydraulics.com **www.bucherhydraulics.com**

© 2026 by Bucher Hydraulics AG Frutigen, 3714 Frutigen, Switzerland

All rights reserved.
Data is provided for the purpose of product description only, and must not be construed as warranted characteristics in the legal sense. The information does not relieve users from the duty of conducting their own evaluations and tests. Because the products are subject to continual improvement, we reserve the right to amend the product specifications contained in this catalogue.

BUCHER hydraulics

WWW.SUMY.IR

Pressure valve
Sequence function

Q_{max} = 140 l/min, p_{max} = 450 bar
direct acting, poppet type, mechanically adjustable
Type series: DDPDB-3D-10-...

- Screw-in cartridge valve
- For cavity DD
- All external parts with zinc-nickel plating according to DIN EN ISO 19598
- Installation in threaded port body type DDY-12
- All ports are closed leak-free by means of a poppet design
- The external oil drain allows pressure setting without interference by the secondary pressure
- Suitable for use as anti-shock valve (with cross-line relief function)
- Also available as stack valve

Description

The pressure relief valves, series DDPD-3D-..., are size 10, direct acting, screw-in cartridge valves with an M24×1.5 mounting thread. The poppet seat design ensures that the valves are leak-tight. With this valve type a so-called cross-line relief function can be realized (i.e. the pressure relief function takes place in both volume flow directions). The use of this type series eliminates the need for a second pressure relief cartridge. The spring chamber is externally drained via port Y and has to be led to the tank at zero pressure. To obtain a reliable pressure setting over the entire pressure range, the overall pressure range is divided into different pressure levels. Each pressure range corresponds to a particular spring that allows a certain maximum operating pressure to be set. The pressure is set by means of an adjusting spindle. All external parts of the screw-in valves are zinc-nickel plated and are thus suitable for use in the harshest operating environments. These valves are mainly used in certain mobile and industrial applications to limit the system pressure. Thanks to the external oil drain, the actuator port can be pressurized without affecting the setting. For self-assembly, please refer to the section related data sheets.

Symbol

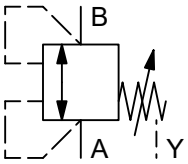

WWW.SUMY.IR

Technical data

General characteristics	Description, value, unit
Function group	Pressure valve
Function	Sequence function
Design	Screw-in cartridge valve
Controls	mechanically adjustable
Characteristic	direct acting, poppet type
Construction size	NG 10
Thread size	M24×1,5
Mounting attitude	unrestricted
Weight	0.35 kg
Cavity acc. factory standard	For cavity DD
Tightening torque steel	100 Nm
Tightening torque aluminium	50 Nm
Tightening torque tolerance	± 10 %
Minimum ambient temperature	- 30 °C
Maximum ambient temperature	+ 80 °C
Surface protection	All external parts with zinc-nickel plating according to DIN EN ISO 19598
Sealing material	see ordering code
Seal kit order number	NBR: DS-255-N / FKM: DS-255-V

Hydraulic characteristics	Description, value, unit
Maximum operating pressure	450 bar
Restriction of the operating pressure	connection Y must be pressureless relieved to the tank!
Maximum flow rate	140 l/min
Flow direction	see symbol
Hydraulic fluid	HL and HLP mineral oil according to DIN 51 524; other fluids on request!
Minimum fluid temperature	- 30 °C
Maximum fluid temperature	+ 80 °C
Viscosity range	10 ... 650 mm^2/s (cSt)
Recommended viscosity range	15 ... 250 mm^2/s (cSt)
Minimum fluid cleanliness (cleanlineless class according to ISO 4406:1999)	class 20/18/15
Minimum set pressure	10 bar
Maximum set pressure	450 bar
Pressure adjustment range	pressure range L: 10 ...100 bar pressure range M: 80 ... 240 bar pressure range N: 180 ... 350 bar pressure range O: 300 ... 400 bar pressure range P: 350 ... 450 bar

Performance graphs

measured with oil viscosity 33.0 mm²/s (cSt)

p = f (Q) Pressure-flow rate

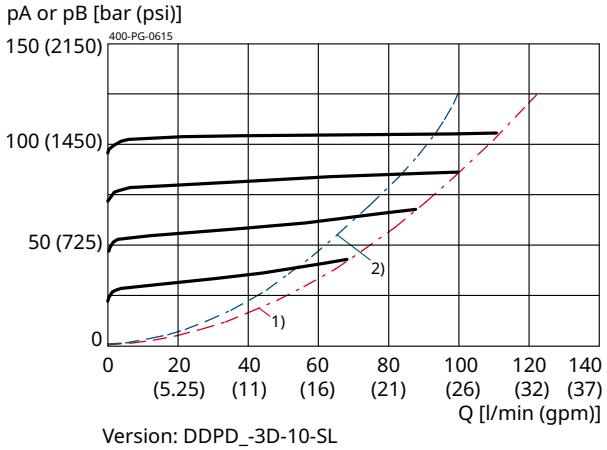

Version: DDPD_-3D-10-SL
1) = Application limit pA
2) = Application limit pB

p = f (Q) Pressure-flow rate

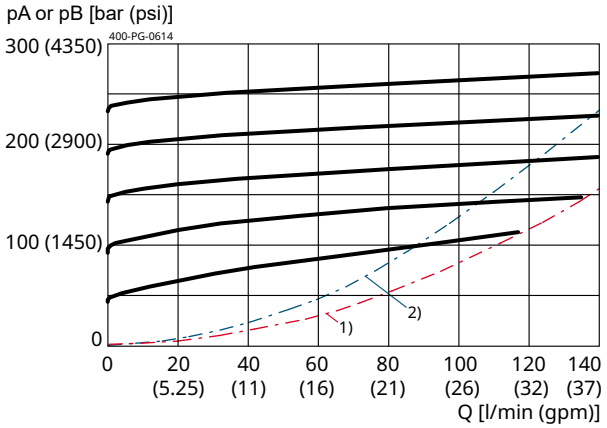

Version: DDPD_-3D-10-SM
1) = Application limit pA
2) = Application limit pB

p = f (Q) Pressure-flow rate

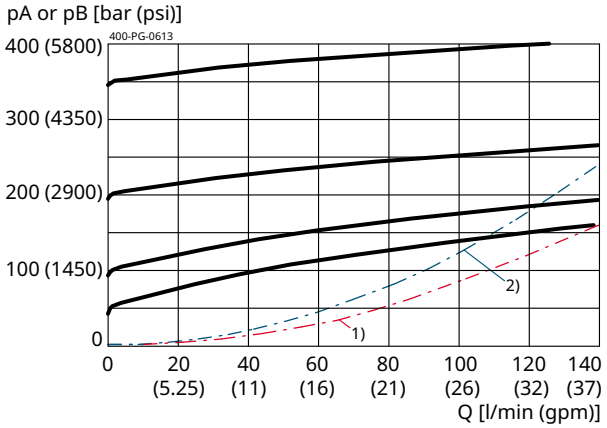

Version: DDPD_-3D-10-SN
1) = Application limit pA
2) = Application limit pB

p = f (Q) Pressure-flow rate

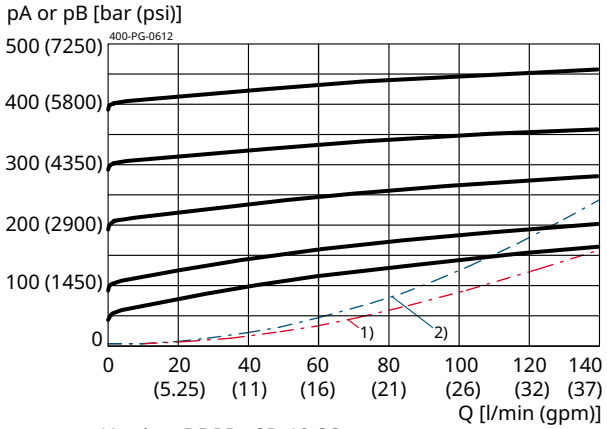

Version: DDPD_-3D-10-SO
1) = Application limit pA
2) = Application limit pB

p = f (Q) Pressure-flow rate

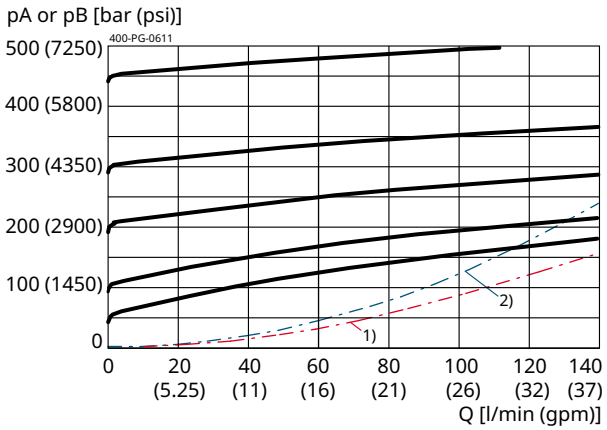

Version: DDPD_-3D-10-SP
1) = Application limit pA
2) = Application limit pB

Dimensions and sectional view

Beispiel für die Masseinheit: Example for the dimensional units:
0.79 = 0.79 mm millimeter (.031) = 0.031" inch

Version "S": Einstellschraube *(Standard)*
Version "S": adjustment screw (standard)

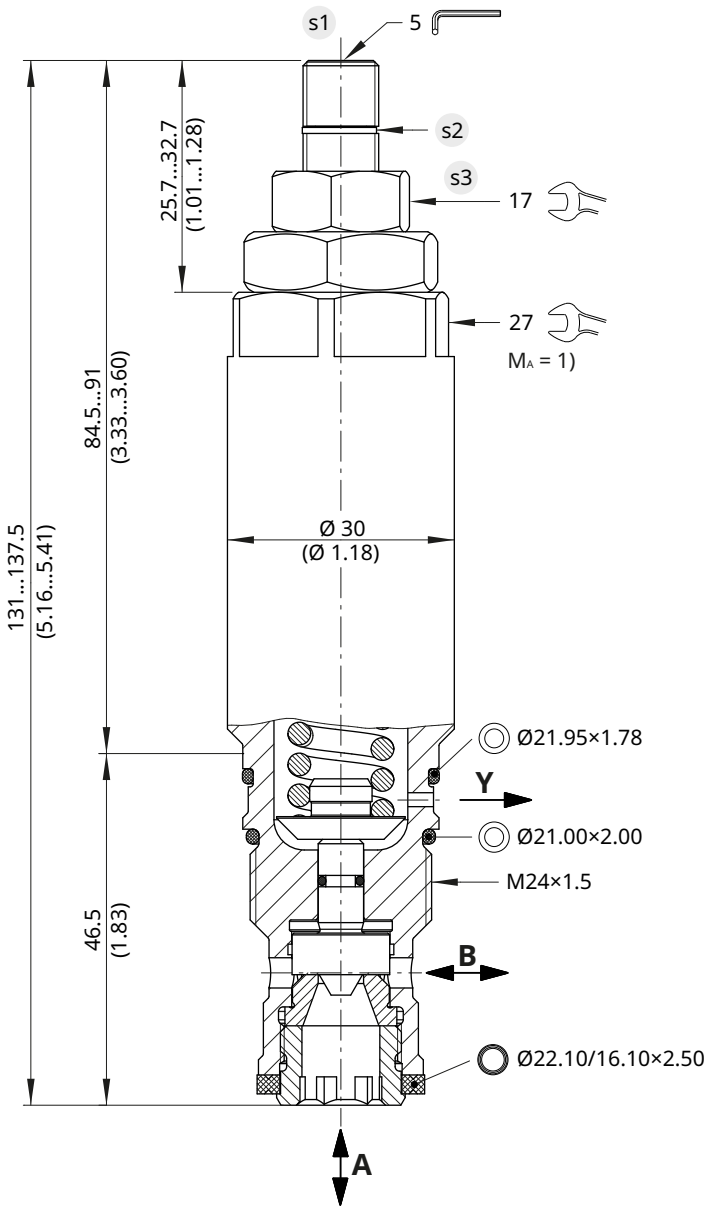

Version "H": Einstellschraube mit Handrad
Version "H": adjustment screw with handknob

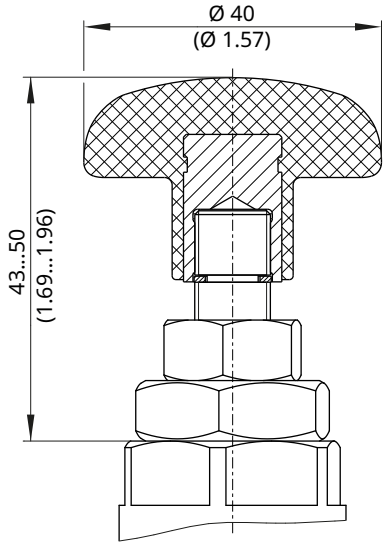

Einstellschraube mit Sicherungskappe
adjustment screw with tamper-proof cap

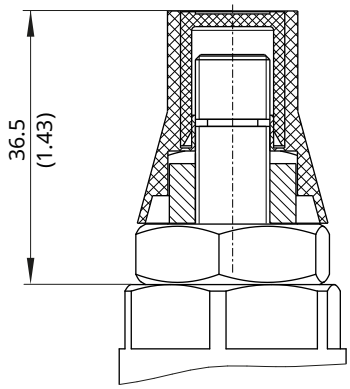

Installation information

ATTENTION!
Only qualified personnel with mechanical skills may carry out any maintenance work. Generally, the only work that should ever be undertaken is to check, and possibly replace, the seals. When changing seals, oil or grease the new seals thoroughly before fitting them.

NOTE!
Set the required pressure with the adjusting screw s1 . After you have set the valve, lock the adjusting screw s1 with the lock nut.

NOTE!
1) When fitting the screw-in cartridge valve, use the specified tightening torque. The value can be found in the chapter "Technical data".

NOTE!
Valve settings can be sealed by fitting the tamper-proof cap. To fit the cap, the snap ring s2 has to be removed. Subsequent adjustment is only possible by destroying the tamper-proof cap.

Application example

In the application example, valve type DDPD_-3D-10... is used as shock protection for a hydraulic motor.

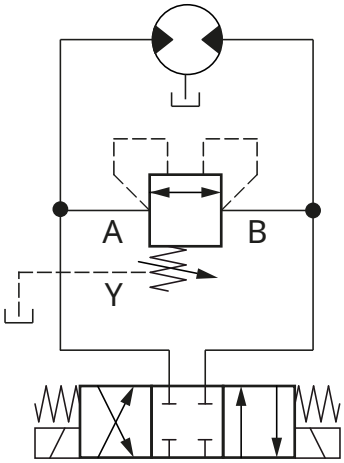

NOTE!
The seals are not available individually. The seal kit order number can be found in the chapter "Technical data".

Ordering code

Ex. D D P D B - 3 D - 10 - S L N - 2

D	=	pressure valve
D	=	relief-function, direct acting
P	=	cartridge design
D	=	cross-line relief function (dual)
A ... Q Z ... R	=	standard model according to valid data sheet special model (on request)
3	=	pressure function 3 (Y-outlet external)
D	=	cavity type DD
10	=	nominal size10
S	=	adjustment screw with internal hexagon **(standard)**
H	=	adjustment screw with hand knob
L	=	pressure range 10...100 bar / 145...1450 psi
M	=	pressure range 80...240 bar / 1160...3500 psi
N	=	pressure range 180...350 bar / 2600...5000 psi
O	=	pressure range 300...400 bar / 4350...5800 psi
P	=	pressure range 350...450 bar / 5000...6500 psi
N	=	NBR (nitril-butadien-rubber / BUNA) seals **(standard)**
V	=	FKM (fluorocarbon rubber / VITON) seals (special seals on request)
1...9	=	technical design no. (omit by ordering)

NOTE!
When required the tamper-proof cap (seal) for the adjustment screw must be ordered separately in plain language.

Related data sheets

Reference	Description
400-P-040011	Form tools
400-P-060121	Cavity DD
400-P-740112	Threaded port body DDY-12

info.ch@bucherhydraulics.com **www.bucherhydraulics.com**

© 2026 by Bucher Hydraulics AG Frutigen, 3714 Frutigen, Switzerland

All rights reserved.
Data is provided for the purpose of product description only, and must not be construed as warranted characteristics in the legal sense. The information does not relieve users from the duty of conducting their own evaluations and tests. Because the products are subject to continual improvement, we reserve the right to amend the product specifications contained in this catalogue.

BUCHER hydraulics

RELIEF VALVE DIRECT ACTING, LOW FLOW, PILOT CONTROL

WWW.SUMY.IR

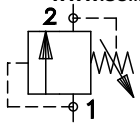

TORQUE:
Steel = 35/40 Ft–Lb. [47/54 Nm]
Aluminum = 25/30 Ft–Lb. [34/41 Nm]

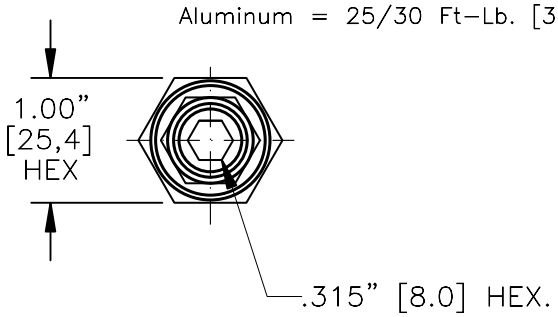

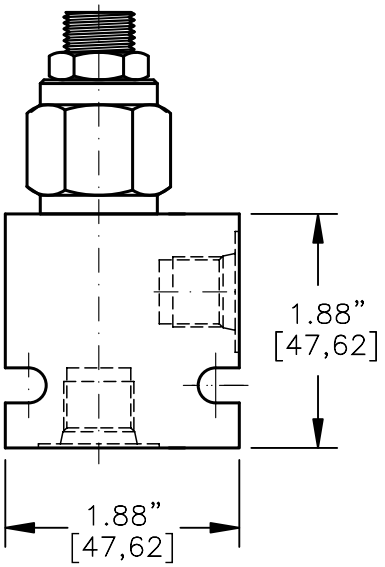

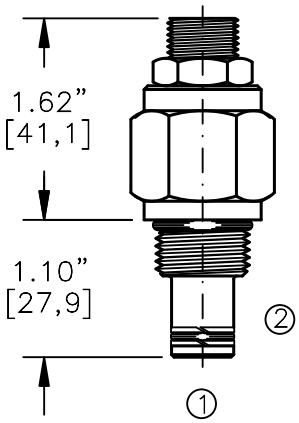

FOR ALUMINUM OR STEEL VALVE HOUSING CONFIGURATIONS SEE PAGE 0–011.1

RVPD–08–X–X–X–XX

BASIC

SIZE
08 = 3/4"–16 UNF

SEALS
N = BUNA "N"
V = VITON

ADJUSTMENT
S = ADJUSTING SCREW
C = CAPPED
T = TAMPERPROOF
K = HANDKNOB
M = METAL HANDKNOB

PORTS
0 = CARTRIDGE ONLY
02BX = G 1/4" BSPP
06TX = SAE – #6
"A" – ALUM. HOUSING
"S" – STEEL HOUSING

PRESSURE RANGE
15 = 0 TO 1500 PSI
30 = 0 TO 3000 PSI
50 = 0 TO 5000 PSI

FOR ADJUSTMENT CONTROL OPTIONS SEE PAGE 0–050.0

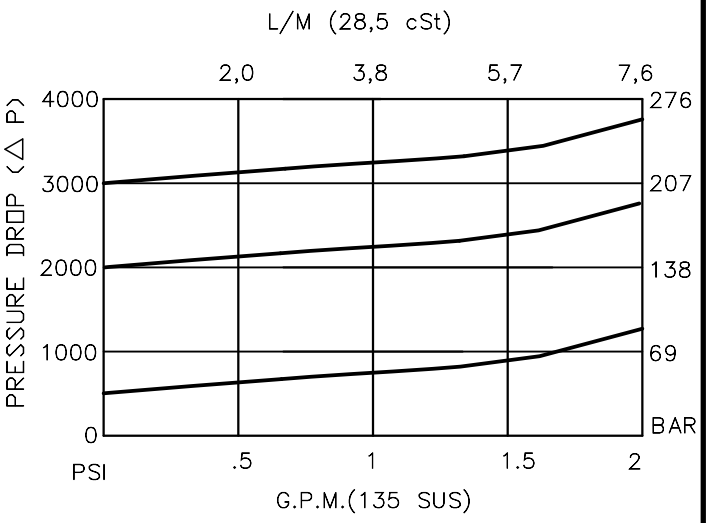

BUCHER hydraulics

WWW.SUMY.IR

RELIEF VALVE DIRECT ACTING, LOW FLOW, PILOT CONTROL.

DESCRIPTION

This unit is a DIRECT ACTING, REMOTE CONTROL FOR VALVES WITH LOW PILOT FLOW, cartridge type, steel ball, low leakage, screw in type, adjustable, pressure control valve.

OPERATIONS

This valve (RVPD) blocks flow from port #1 to port #2 until sufficient pressure is present at port #1 to force the steel ball from its seat thus opening the valve.
This cartridge relief valve offers a smooth transition in response to a load change in a hydraulic circuit.

FEATURES AND BENEFITS

Leakproof screw adjustment.
Pressure in tank port (2) will add to the bias spring setting, and is limited to 2000 PSI.
Adjustment screw can not be backed out of valve.
Overset protection – spring can not go solid.
Hardened precision steel ball & seat provides reliable, long life.
A unique self aligning (floating) cage provides very low hysteresis and reliable operation.
All external carbon steel parts are plated for longer life against the elements.
Valve is available with screw, tamperproof, capped and handknob adjustments.
All cartridge valves are 100% functionally tested.
Industry common cavity.

SPECIFICATIONS

OPERATING PRESSURE: 5,000 PSI [350 Bar]
PROOF PRESSURE: 10,000 PSI [700 Bar]
FLOW: 2.0 GPM [7.6 L/M] nominal. See performance chart.
INTERNAL LEAKAGE: 5 drops/min [.25 cc/m] @ 85% of crack pressure.
DEFINITION OF CRACK: evident at 0.06 GPM [0.25 LPM]
VALVE HOUSINGS: 2500 PSI [175 Bar] = Aluminum – Anodized.
5000 PSI [350 Bar] = Steel – Unplated.
OPERATING TEMPERATURE: –40° to +250° F. [–40° to +120° C.]
OPERATING MEDIA: All general purpose hydraulic fluids such as MIL–H–5606, SAE–#10, SAE–#20, etc.
INSTALLATION: No restriction.
FILTRATION: 25 microns or better.
SEAL KIT NUMBER: SKN–0822 for Buna "N".
SKV–0822 for Viton.
WEIGHT: 0.30 lb [.14 kg] cartridge only.
VALVE CAVITY: #C0820, See Page 0–011.0.

info.el@bucherhydraulics.com www.bucherhydraulics.com/commoncavity

© 2015 by Bucher Hydraulics, Inc., 2545 Northwest Parkway, Elgin, Illinois 60124, USA
All rights reserved.
Data is provided for the purpose of product description only, and must not be construed as warranted characteristics in the legal sense. The information does not relieve users from the duty of conducting their own evaluations and tests. Because the products are subject to continual improvement, we reserve the right to amend the product specifications contained in this catalogue.

BUCHER hydraulics

RELIEF VALVE DIRECT ACTING, LOW FLOW, PILOT CONTROL

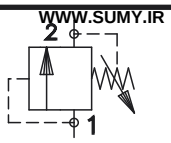

WWW.SUMY.IR

Pat.#5,546,980

TORQUE:
Steel = 55/60 Ft–Lb. [74/81 Nm]
Aluminum = 35/40 Ft–Lb. [47/54 Nm]

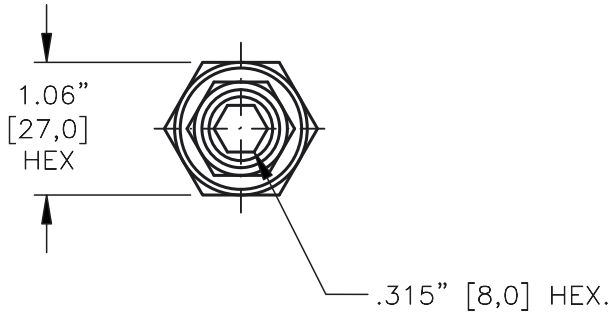

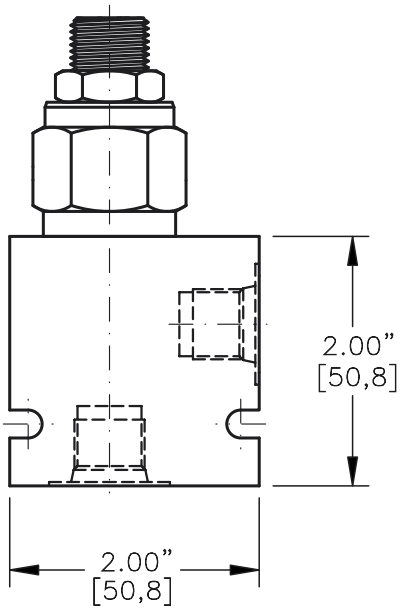

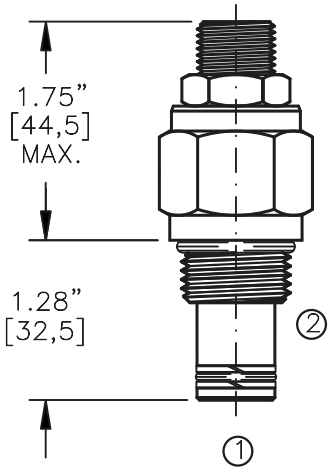

FOR ALUMINUM OR STEEL VALVE HOUSING CONFIGURATIONS SEE PAGE 0–012.1

RVPD–10–X–X–X–XX

BASIC

SIZE
10 = 7/8"–14 UNF

SEALS
N = BUNA "N"
V = VITON

ADJUSTMENT
S = ADJUSTING SCREW
C = CAPPED
T = TAMPERPROOF
K = HANDKNOB
M = METAL HANDKNOB

PRESSURE RANGE
15 = 0 TO 1500 PSI
30 = 0 TO 3000 PSI
50 = 0 TO 5000 PSI

PORTS
0 = CARTRIDGE ONLY
02BX = G 1/4" BSPP
03BX = G 3/8" BSPP
06TX = SAE – #6
08TX = SAE – #8

"A" – ALUM. HOUSING
"S" – STEEL HOUSING

FOR ADJUSTMENT CONTROL OPTIONS SEE PAGE 0–050.0

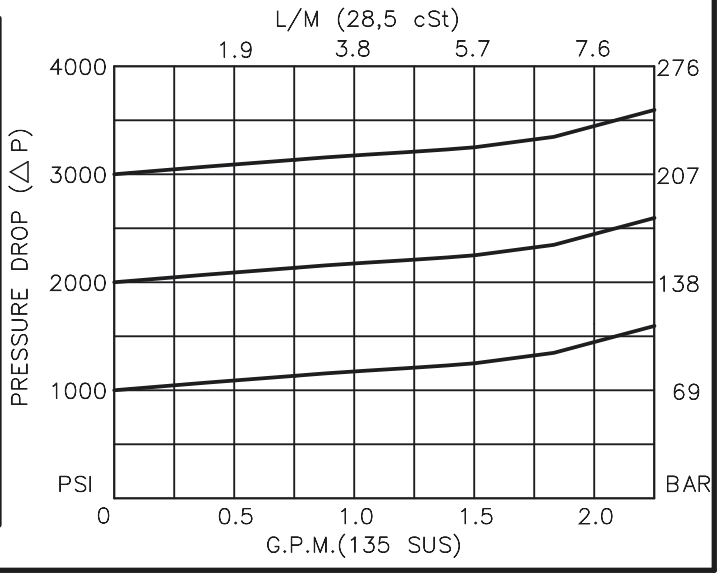

BUCHER hydraulics

WWW.SUMY.IR

RELIEF VALVE DIRECT ACTING, LOW FLOW, PILOT CONTROL.

DESCRIPTION

This unit is a DIRECT ACTING, REMOTE CONTROL FOR VALVES WITH LOW PILOT FLOW, cartridge type, steel ball, low leakage, screw in type, adjustable, pressure control valve.

OPERATIONS

This valve (RVPD) blocks flow from port #1 to port #2 until sufficient pressure is present at port #1 to force the steel ball from its seat thus opening the valve.
This cartridge relief valve offers a smooth transition in response to a load change in a hydraulic circuit.

FEATURES AND BENEFITS

Leakproof screw adjustment.
Pressure in tank port (2) will add to the bias spring setting, and is limited to 2000 PSI.
Adjustment screw can not be backed out of valve.
Overset protection – spring can not go solid.
Hardened precision steel ball & seat provides reliable, long life.
A unique self aligning (floating) cage provides very low hysteresis and reliable operation.
All external carbon steel parts are plated for longer life against the elements.
Valve is available with screw, tamperproof, capped and handknob adjustments.
All cartridge valves are 100% functionally tested.
Industry common cavity.

SPECIFICATIONS

OPERATING PRESSURE: 5,000 PSI [350 Bar]
PROOF PRESSURE: 10,000 PSI [700 Bar]
FLOW: 2.0 GPM [7.6 L/M] nominal. See performance chart.
INTERNAL LEAKAGE: 5 drops/min [.25 cc/m] @ 85% of crack pressure.
DEFINITION OF CRACK: evident at 0.06 GPM [0.25 LPM]
VALVE HOUSINGS: 2500 PSI [175 Bar] = Aluminum – Anodized.
5000 PSI [350 Bar] = Steel – Unplated.
OPERATING TEMPERATURE: –40° to +250° F. [–40° to +120° C.]
OPERATING MEDIA: All general purpose hydraulic fluids such as MIL–H–5606, SAE–#10, SAE–#20, etc.
INSTALLATION: No restriction.
FILTRATION: 25 microns or better.
SEAL KIT NUMBER: SKN–1022 for Buna "N".
SKV–1022 for Viton.
WEIGHT: 0.38 lb [.17 kg] cartridge only.
VALVE CAVITY: #C1020, See Page 0–012.0.

info.el@bucherhydraulics.com www.bucherhydraulics.com/commoncavity

© 2015 by Bucher Hydraulics, Inc., 2545 Northwest Parkway, Elgin, Illinois 60124, USA
All rights reserved.
Data is provided for the purpose of product description only, and must not be construed as warranted characteristics in the legal sense. The information does not relieve users from the duty of conducting their own evaluations and tests. Because the products are subject to continual improvement, we reserve the right to amend the product specifications contained in this catalogue.

BUCHER hydraulics

RELIEF VALVE
DIFFERENTIAL AREA, POPPET TYPE

WWW.SUMY.IR

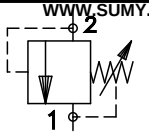

TORQUE:
Steel = 35/40 Ft–Lb. [47/54 Nm]
Aluminum = 25/30 Ft–Lb. [34/41 Nm]

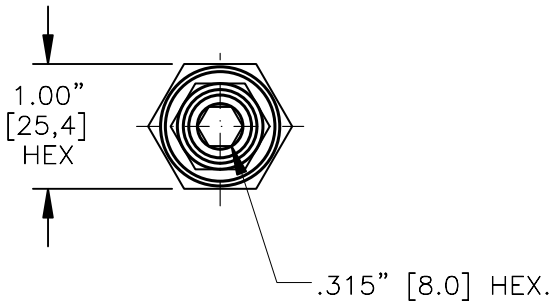

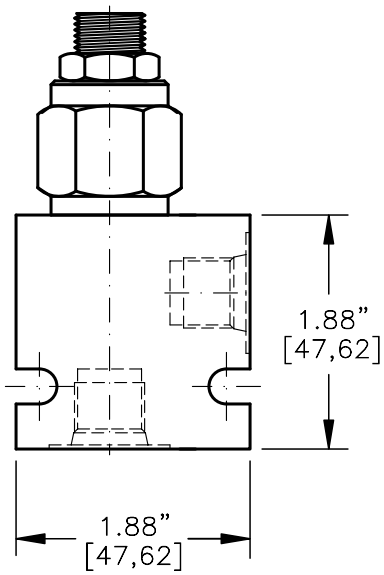

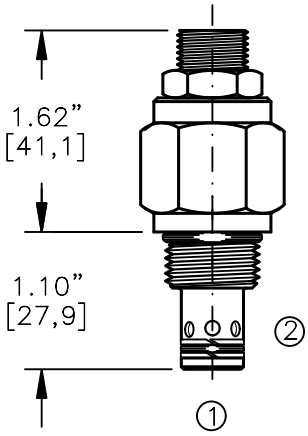

FOR ALUMINUM OR STEEL VALVE HOUSING CONFIGURATIONS SEE PAGE 0–011.1

RVDA–08–X–X–X–XX

BASIC

SIZE
08 = 3/4"–16 UNF

SEALS
N = BUNA "N"
V = VITON

ADJUSTMENT
S = ADJUSTING SCREW
C = CAPPED
T = TAMPERPROOF
K = HANDKNOB
M = METAL HANDKNOB

PRESSURE RANGE
15 = 100 TO 1500 PSI
30 = 750 TO 3000 PSI
50 = 1500 TO 5000 PSI

PORTS
0 = CARTRIDGE ONLY
02BX = G 1/4" BSPP
06TX = SAE – #6

"A" – ALUM. HOUSING
"S" – STEEL HOUSING

FOR ADJUSTMENT CONTROL OPTIONS SEE PAGE 0–050.0

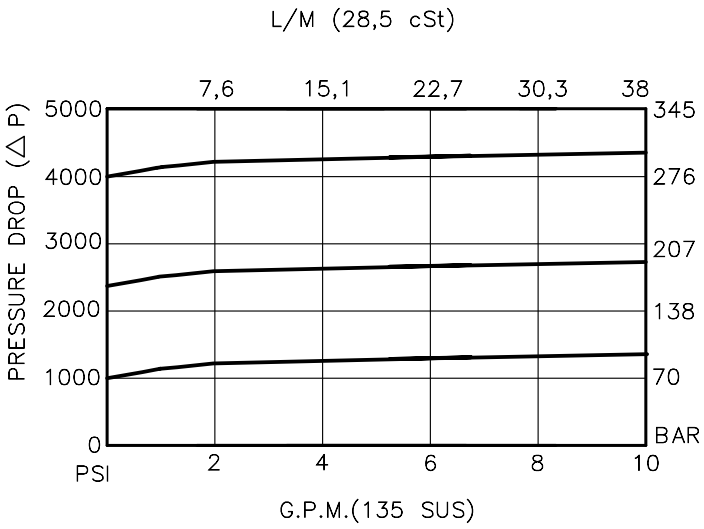

BUCHER hydraulics

WWW.SUMY.IR

DIFFERENTIAL AREA, POPPET TYPE

DESCRIPTION

This unit is a DIFFERENTIAL AREA RELIEF VALVE, cartridge type, direct acting, poppet type, low leackage, screw in type, adjustable, pressure control valve.

OPERATIONS

This valve (RVDA) blocks flow from port #2 to port #1 until sufficient pressure is present at port #2 to force the poppet from its seat thus opening the valve.
This cartridge relief valve offers a smooth transition in response to a load change in a hydraulic circuit.

FEATURES AND BENEFITS

Leakproof screw adjustment.
Adjustment screw can not be backed out of valve.
Overset protection – spring can not go solid.
Hardened precision fitted poppet & cage provides reliable, long life.
All external carbon steel parts are plated for longer life against the elements.
Valve is available with screw, tamperproof, capped and handknob adjustments.
All cartridge valves are 100% functionally tested.
Industry common cavity.

SPECIFICATIONS

OPERATING PRESSURE: 5,000 PSI [350 Bar]
PROOF PRESSURE: 10,000 PSI [700 Bar]
FLOW: 10.0 GPM [38 L/M] nominal. See performance chart.
INTERNAL LEAKAGE: 5 drops/min [.25 cc/m] @ 85% of crack pressure.
DEFINITION OF CRACK: evident at 0.06 GPM [0.25 LPM]
VALVE HOUSINGS: 2500 PSI [175 Bar] = Aluminum – Anodized.
5000 PSI [350 Bar] = Steel – Unplated.
OPERATING TEMPERATURE: –40° to +250° F. [–40° to +120° C.]
OPERATING MEDIA: All general purpose hydraulic fluids such as MIL–H–5606, SAE–#10, SAE–#20, etc.
INSTALLATION: No restriction.
FILTRATION: 25 microns or better.
SEAL KIT NUMBER: SKN–0822 for Buna "N".
SKV–0822 for Viton.
WEIGHT: 0.26 lb [.12 kg] cartridge only.
VALVE CAVITY: #C0820, See Page 0–011.0.

info.el@bucherhydraulics.com www.bucherhydraulics.com/commoncavity

© 2015 by Bucher Hydraulics, Inc., 2545 Northwest Parkway, Elgin, Illinois 60124, USA
All rights reserved.
Data is provided for the purpose of product description only, and must not be construed as warranted characteristics in the legal sense. The information does not relieve users from the duty of conducting their own evaluations and tests. Because the products are subject to continual improvement, we reserve the right to amend the product specifications contained in this catalogue.

BUCHER hydraulics

RELIEF VALVE DIFFERENTIAL AREA, POPPET TYPE

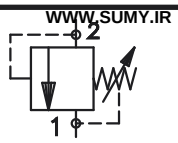

WWW.SUMY.IR

Pat.#5,546,980

TORQUE:
Steel = 55/60 Ft–Lb. [74/81 Nm]
Aluminum = 35/40 Ft–Lb. [47/54 Nm]

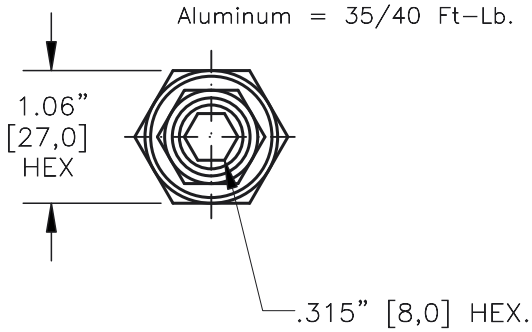

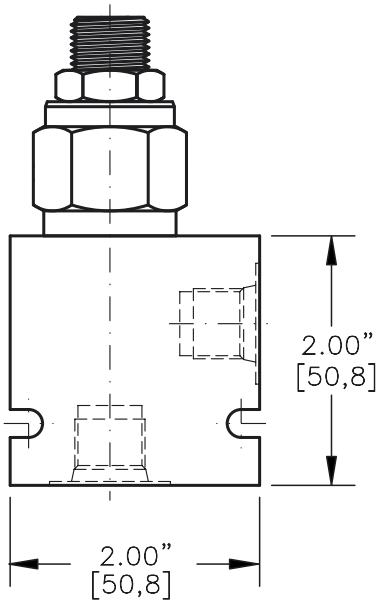

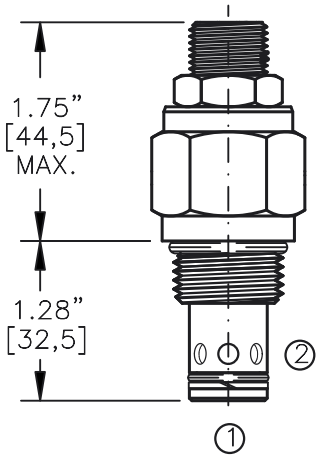

FOR ALUMINUM OR STEEL VALVE HOUSING CONFIGURATIONS SEE PAGE 0–012.1

RVDA–10–N–S–0–XX

BASIC

SIZE
10 = 7/8"–14 UNF

SEALS
N = BUNA "N"
V = VITON

ADJUSTMENT
S = ADJUSTING SCREW
C = CAPPED
T = TAMPERPROOF
K = HANDKNOB
M = METAL HANDKNOB

PRESSURE RANGE
15 = 100 TO 1500 PSI
30 = 300 TO 3000 PSI
50 = 500 TO 5000 PSI

PORTS
0 = CARTRIDGE ONLY
02BX = G 1/4" BSPP
03BX = G 3/8" BSPP
06TX = SAE – #6
08TX = SAE – #8
"A" – ALUM. HOUSING
"S" – STEEL HOUSING

FOR ADJUSTMENT CONTROL OPTIONS SEE PAGE 0–050.0

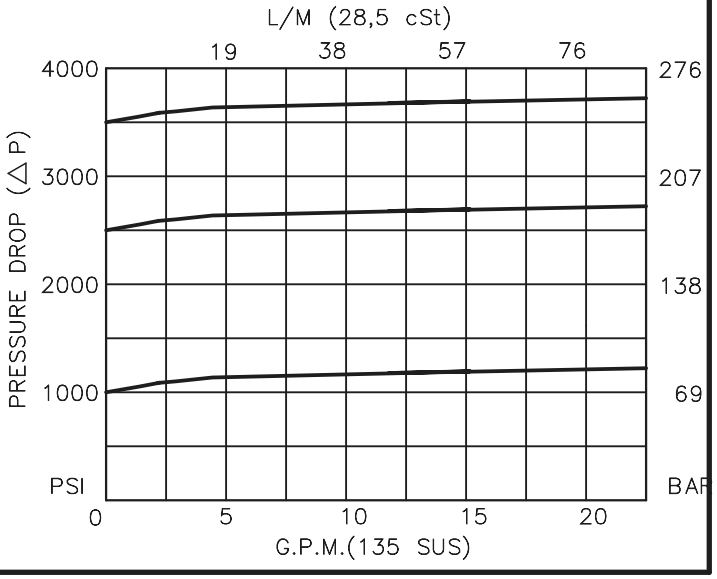

BUCHER hydraulics

WWW.SUMY.IR

RELIEF VALVE DIFFERENTIAL AREA, POPPET TYPE

DESCRIPTION

This unit is a DIFFERENTIAL AREA RELIEF VALVE, cartridge type, direct acting, poppet type, low leackage, screw in type, adjustable, pressure control valve.

OPERATIONS

This valve (RVDA) blocks flow from port #2 to port #1 until sufficient pressure is present at port #2 to force the poppet from its seat thus opening the valve.
This cartridge relief valve offers a smooth transition in response to a load change in a hydraulic circuit.

FEATURES AND BENEFITS

Leakproof screw adjustment.
Adjustment screw can not be backed out of valve.
Overset protection – spring can not go solid.
Hardened precision fitted poppet & cage provides reliable, long life.
All external carbon steel parts are plated for longer life against the elements.
Valve is available with screw, tamperproof, capped and handknob adjustments.
All cartridge valves are 100% functionally tested.
Industry common cavity.

SPECIFICATIONS

OPERATING PRESSURE: 5,000 PSI [350 Bar]
PROOF PRESSURE: 10,000 PSI [700 Bar]
FLOW: 20.0 GPM [76 L/M] nominal. See performance chart.
INTERNAL LEAKAGE: 5 drops/min [.25 cc/m] @ 85% of crack pressure.
DEFINITION OF CRACK: evident at 0.06 GPM [0.25 LPM]
VALVE HOUSINGS: 2500 PSI [175 Bar] = Aluminum – Anodized.
5000 PSI [350 Bar] = Steel – Unplated.
OPERATING TEMPERATURE: –40° to +250° F. [–40° to +120° C.]
OPERATING MEDIA: All general purpose hydraulic fluids such as MIL–H–5606, SAE–#10, SAE–#20, etc.
INSTALLATION: No restriction.
FILTRATION: 25 microns or better.
SEAL KIT NUMBER: SKN–1021 for Buna "N".
SKV–1021 for Viton.
WEIGHT: 0.38 lb [.17 kg] cartridge only.
VALVE CAVITY: #C1020, See Page 0–012.0.

info.el@bucherhydraulics.com www.bucherhydraulics.com/commoncavity

© 2015 by Bucher Hydraulics, Inc., 2545 Northwest Parkway, Elgin, Illinois 60124, USA
All rights reserved.
Data is provided for the purpose of product description only, and must not be construed as warranted characteristics in the legal sense. The information does not relieve users from the duty of conducting their own evaluations and tests. Because the products are subject to continual improvement, we reserve the right to amend the product specifications contained in this catalogue.

BUCHER hydraulics

RELIEF VALVE
PILOT OPERATED, SLIDING SPOOL

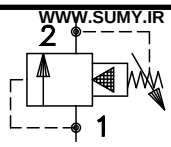

WWW.SUMY.IR

TORQUE:
Steel = 35/40 Ft–Lb. [47/54 Nm]
Aluminum = 25/30 Ft–Lb. [34/41 Nm]

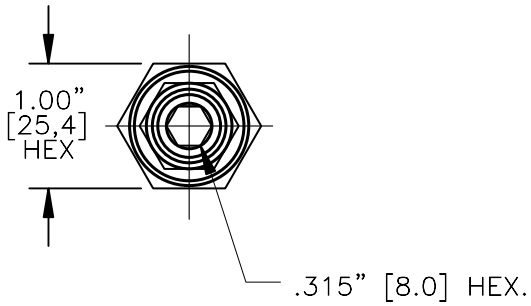

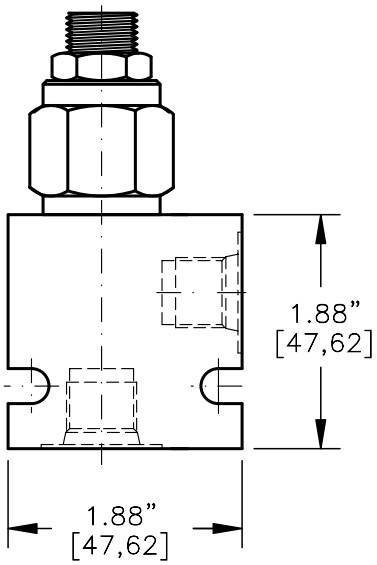

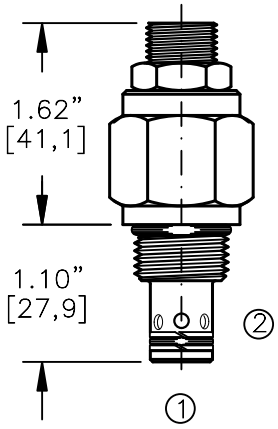

FOR ALUMINUM OR STEEL VALVE HOUSING CONFIGURATIONS SEE PAGE 0–011.1

RVPS–08–X–X–X–XX

BASIC

SIZE
08 = 3/4"–16 UNF

SEALS
N = BUNA "N"
V = VITON

ADJUSTMENT
S = ADJUSTING SCREW
C = CAPPED
T = TAMPERPROOF
K = HANDKNOB
M = METAL HANDKNOB

PRESSURE RANGE
15 = 50 TO 1500 PSI
30 = 50 TO 3000 PSI
50 = 50 TO 5000 PSI

PORTS
0 = CARTRIDGE ONLY
02BX = G 1/4" BSPP
06TX = SAE – #6

"A" – ALUM. HOUSING
"S" – STEEL HOUSING

FOR ADJUSTMENT CONTROL OPTIONS SEE PAGE 0–050.0

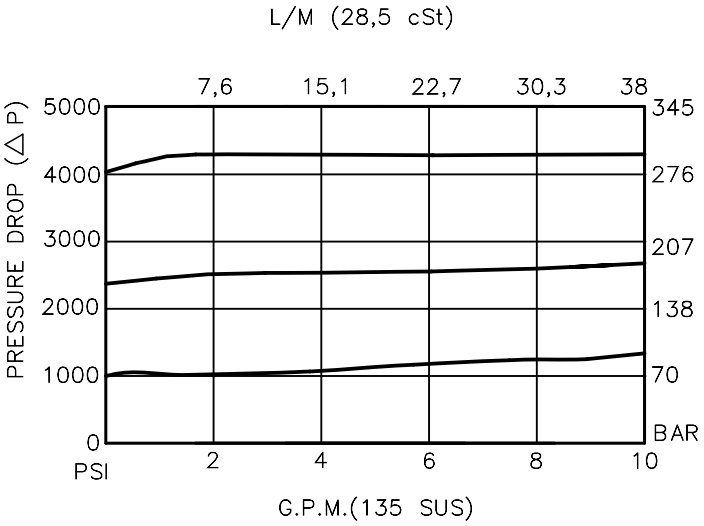

BUCHER hydraulics

WWW.SUMY.IR

RELIEF VALVE
PILOT OPERATED, SLIDING SPOOL

DESCRIPTION

This unit is a PILOT OPERATED, BALANCED SLIDING SPOOL, PRESSURE RELIEF, cartridge valve for accurate and smooth pressure regulation.

OPERATIONS

This valve (RVPS) blocks flow from port #1 to port #2 until sufficient pressure is present at port #1 to force the pilot poppet from its seat thus opening the valve.
This cartridge relief valve offers a smooth transition in response to a load change in a hydraulic circuit.

FEATURES AND BENEFITS

Leakproof screw adjustment.
Pressure in tank port (2) will add to the bias spring setting, and is limited to 2000 psi.
Adjustment screw can not be backed out of the valve.
Overset protection - pilot spring can not go solid.
Hardened precision fitted spool & cage provides reliable, long life.
A unique self aligning (floating) cage provides very low hysteresis and reliable operation.
All external carbon steel parts are plated for longer life against the elements.
Valve is available with screw, tamperproof, capped and handknob adjustments.
All cartridge valves are 100% functionally tested.
Industry common cavity.

SPECIFICATIONS

OPERATING PRESSURE:	5,000 psi [350 bar]
PROOF PRESSURE:	10,000 psi [700 bar]
FLOW:	15.0 gpm [57 l/m] nominal. See performance chart.
INTERNAL LEAKAGE:	7 cu.in/min [114 cc/m] @ 85% of crack pressure.
DEFINITION OF CRACK:	evident at 0.06 gpm [0.25 lpm]
VALVE HOUSINGS:	2500 psi [175 bar] = Aluminum - Anodized. 5000 psi [350 bar] = Steel - Unplated.
OPERATING TEMPERATURE:	-40° to +250° F. [-40° to +120° C.]
OPERATING MEDIA:	All general purpose hydraulic fluids such as MIL-H-5606, SAE-#10, SAE-#20, etc.
INSTALLATION:	No restriction.
FILTRATION:	25 microns or better.
SEAL KIT NUMBER:	SKN-0822 for Buna "N". SKV-0822 for Viton.
WEIGHT:	0.26 lb [.12 kg] cartridge only.
VALVE CAVITY:	#C0820, See Page 0-011.0.

info.el@bucherhydraulics.com

www.bucherhydraulics.com/commoncavity

© 2026 by Bucher Hydraulics, Inc., 2545 Northwest Parkway, Elgin, Illinois 60124, USA
All rights reserved.
Data is provided for the purpose of product description only, and must not be construed as warranted characteristics in the legal sense. The information does not relieve users from the duty of conducting their own evaluations and tests. Because the products are subject to continual improvement, we reserve the right to amend the product specifications contained in this catalogue.

BUCHER hydraulics

RELIEF VALVE PILOT OPERATED, SLIDING SPOOL

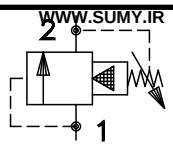

WWW.SUMY.IR

Pat.#5,546,980

TORQUE:
Steel = 55/60 Ft–Lb. [74/81 Nm]
Aluminum = 35/40 Ft–Lb. [47/54 Nm]

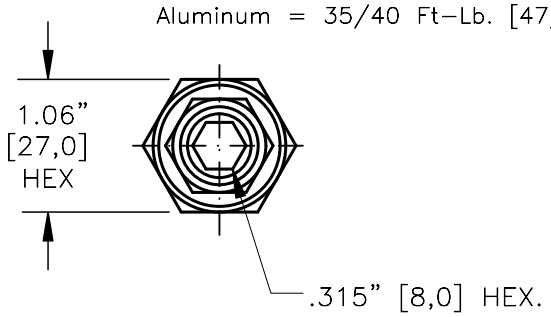

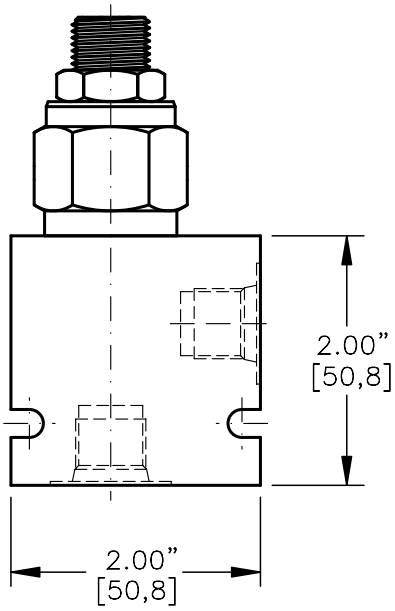

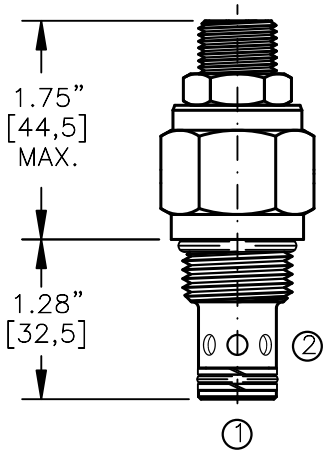

FOR ALUMINUM OR STEEL VALVE HOUSING CONFIGURATIONS SEE PAGE 0–012.1

RVPS–10–X–X–X–XX

BASIC

SIZE
10 = 7/8"–14 UNF

SEALS
N = BUNA "N"
V = VITON

ADJUSTMENT
S = ADJUSTING SCREW
C = CAPPED
T = TAMPERPROOF
K = HANDKNOB
M = METAL HANDKNOB

PRESSURE RANGE
15 = 50 TO 1500 PSI
30 = 50 TO 3000 PSI
50 = 50 TO 5000 PSI

PORTS
0 = CARTRIDGE ONLY
02BX = G 1/4" BSPP
03BX = G 3/8" BSPP
06TX = SAE – #6
08TX = SAE – #8

"A" – ALUM. HOUSING
"S" – STEEL HOUSING

FOR ADJUSTMENT CONTROL OPTIONS SEE PAGE 0–050.0

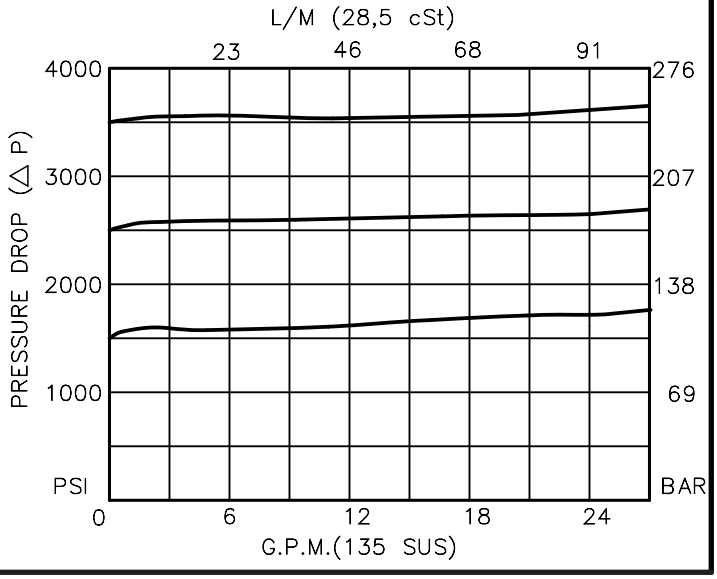

BUCHER hydraulics

WWW.SUMY.IR

RELIEF VALVE PILOT OPERATED, SLIDING SPOOL

DESCRIPTION

This unit is a PILOT OPERATED, BALANCED SLIDING SPOOL, PRESSURE RELIEF, cartridge valve for accurate and smooth pressure regulation.

OPERATIONS

This valve (RVPS) blocks flow from port #1 to port #2 until sufficient pressure is present at port #1 to force the pilot poppet from its seat thus opening the valve.
This cartridge relief valve offers a smooth transition in response to a load change in a hydraulic circuit.

FEATURES AND BENEFITS

Leakproof screw adjustment.
Pressure in tank port (2) will add to the bias spring setting, and is limited to 2000 psi.
Adjustment screw can not be backed out of the valve.
Overset protection - pilot spring can not go solid.
Hardened precision fitted spool & cage provides reliable, long life.
A unique self aligning (floating) cage provides very low hysteresis and reliable operation.
All external carbon steel parts are plated for longer life against the elements.
Valve is available with screw, tamperproof, capped and handknob adjustments.
All cartridge valves are 100% functionally tested.
Industry common cavity.

SPECIFICATIONS

OPERATING PRESSURE:	5,000 psi [350 bar]
PROOF PRESSURE:	10,000 psi [700 bar]
FLOW:	26.0 gpm [100 l/m] nominal. See performance chart..
INTERNAL LEAKAGE:	9 cu.in/min [147 cc/m] @ 85% of crack pressure.
DEFINITION OF CRACK:	evident at 0.06 gpm [0.25 lpm]
VALVE HOUSINGS:	2500 psi [175 bar] = Aluminum - Anodized. 5000 psi [350 bar] = Steel - Unplated.
OPERATING TEMPERATURE:	-40° to +250° F. [-40° to +120° C.]
OPERATING MEDIA:	All general purpose hydraulic fluids such as MIL-H-5606, SAE-#10, SAE-#20, etc.
INSTALLATION:	No restriction.
FILTRATION:	25 microns or better.
SEAL KIT NUMBER:	SKN-1022 for Buna "N". SKV-1022 for Viton.
WEIGHT:	0.38 lb [.17 kg] cartridge only.
VALVE CAVITY:	#C1020, See Page 0-012.0.

info.el@bucherhydraulics.com www.bucherhydraulics.com/commoncavity

© 2026 by Bucher Hydraulics, Inc., 2545 Northwest Parkway, Elgin, Illinois 60124, USA
All rights reserved.
Data is provided for the purpose of product description only, and must not be construed as warranted characteristics in the legal sense. The information does not relieve users from the duty of conducting their own evaluations and tests. Because the products are subject to continual improvement, we reserve the right to amend the product specifications contained in this catalogue.

BUCHER hydraulics

RELIEF VALVE
PILOT OPERATED, SLIDING SPOOL

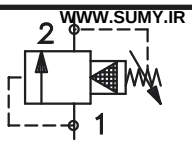

WWW.SUMY.IR

Pat, # 5,546,980

TORQUE:
Steel = 70/75 Ft–Lb. [95/102 Nm]
Aluminum = 55/60 Ft–Lb. [74/81 Nm]

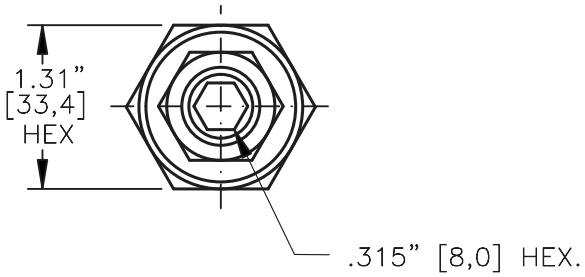

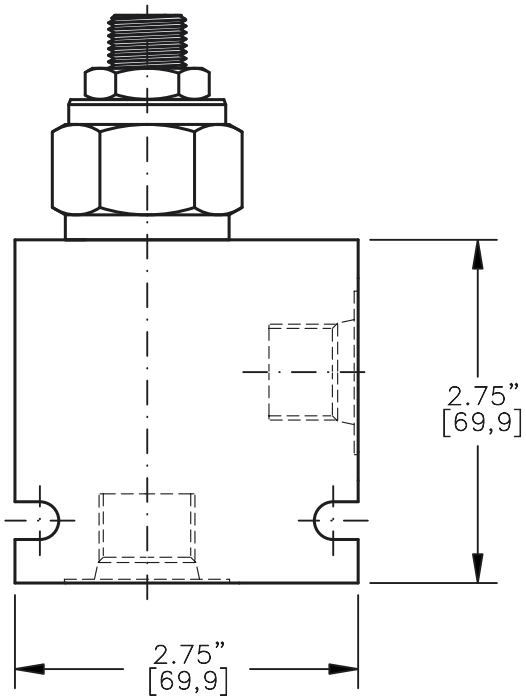

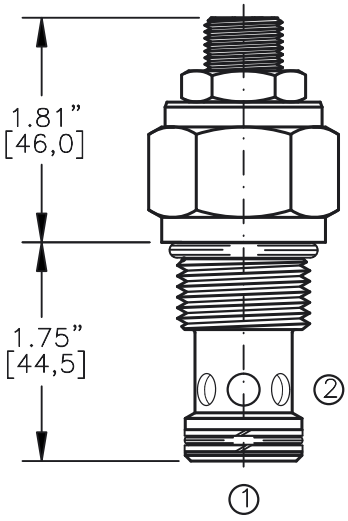

FOR ALUMINUM OR STEEL VALVE HOUSING CONFIGURATIONS SEE PAGE 0–013.1

RVPS–12–X–X–X–XX

BASIC

SIZE
12 = 1.062"–12 UNF

SEALS
N = BUNA "N"
V = VITON

ADJUSTMENT
S = ADJUSTING SCREW
C = CAPPED
T = TAMPERPROOF
K = HANDKNOB
M = METAL HANDKNOB

PRESSURE RANGE
15 = 100 TO 1500 PSI
30 = 300 TO 3000 PSI
50 = 500 TO 5000 PSI

PORTS
0 = CARTRIDGE ONLY
04BX = G 1/2" BSPP
06BX = G 3/4" BSPP
10TX = SAE – #10
12TX = SAE – #12

"A" – ALUM. HOUSING
"S" – STEEL HOUSING

FOR ADJUSTMENT CONTROL OPTIONS SEE PAGE 0–050.0

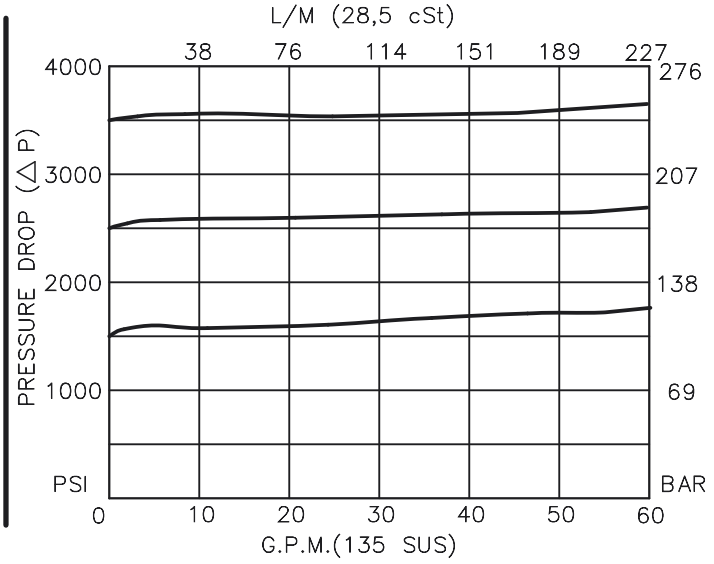

BUCHER hydraulics

WWW.SUMY.IR

RELIEF VALVE
PILOT OPERATED, SLIDING SPOOL

DESCRIPTION

This unit is a PILOT OPERATED, BALANCED SLIDING SPOOL, PRESSURE RELIEF, cartridge valve for accurate and smooth pressure regulation.

OPERATIONS

This valve blocks flow from port 1 to port 2 until sufficient pressure is present at port 1 to force the pilot poppet from its seat thus opening the valve.
This cartridge relief valve offers a smooth transition in response to a load change in a hydraulic circuit.

FEATURES AND BENEFITS

Leakproof screw adjustment.
Pressure in tank port (2) will add to the bias spring setting, and is limited to 2000 PSI.
Adjustment screw can not be backed out of the valve.
Overset protection - pilot spring can not go solid.
Hardened precision fitted spool & cage provides reliable, long life.
A unique self aligning (floating) cage provides very low hysteresis and reliable operation.
All external carbon steel parts are plated for longer life against the elements.
Valve is available with screw, tamperproof, capped and handknob adjustments.
All cartridge valves are 100% functionally tested.

SPECIFICATIONS

OPERATING PRESSURE:	5,000 psi [350 bar]
PROOF PRESSURE:	10,000 psi [700 bar]
FLOW:	60.0 gpm [227 l/m] nominal. See performance chart.
INTERNAL LEAKAGE:	12 cu.in/min [196 cc/m] @ 85% of crack pressure.
DEFINITION OF CRACK:	evident at 0.06 gpm [0.25 lpm]
VALVE HOUSINGS:	2500 psi [175 bar] = Aluminum - Anodized. 5000 psi [350 bar] = Steel - Unplated.
OPERATING TEMPERATURE:	-40° to +250° F. [-40° to +120° C.]
OPERATING MEDIA:	All general purpose hydraulic fluids such as MIL-H-5606, SAE-#10, SAE-#20, etc.
INSTALLATION:	No restriction.
FILTRATION:	25 microns or better.
SEAL KIT NUMBER:	SKN-1222 for Buna "N". SKV-1222 for Viton.
WEIGHT:	0.63 lb [.25 kg] cartridge only.
VALVE CAVITY:	#C1220, See Page 0-013.0.

info.el@bucherhydraulics.com

www.bucherhydraulics.com/commoncavity

© 2026 by Bucher Hydraulics, Inc., 2545 Northwest Parkway, Elgin, Illinois 60124, USA
All rights reserved.
Data is provided for the purpose of product description only, and must not be construed as warranted characteristics in the legal sense. The information does not relieve users from the duty of conducting their own evaluations and tests. Because the products are subject to continual improvement, we reserve the right to amend the product specifications contained in this catalogue.

BUCHER hydraulics

RELIEF VALVE PILOT OPERATED, POPPET TYPE, FREE REVERSE FLOW

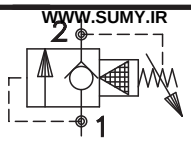

WWW.SUMY.IR

TORQUE:
Steel = 55/60 Ft–Lb. [74/81 Nm]
Aluminum = 35/40 Ft–Lb. [47/54 Nm]

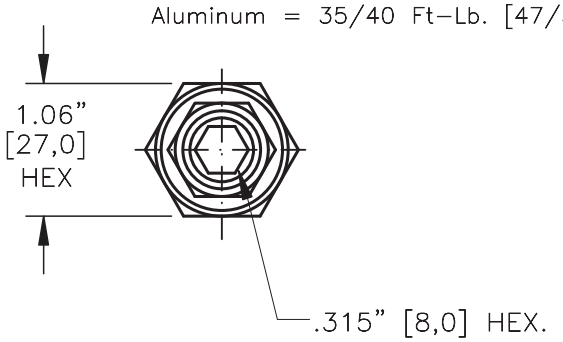

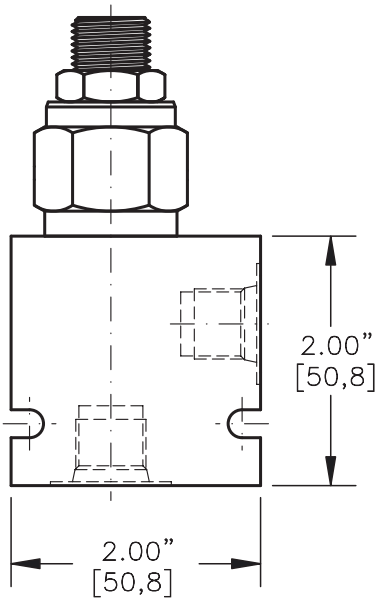

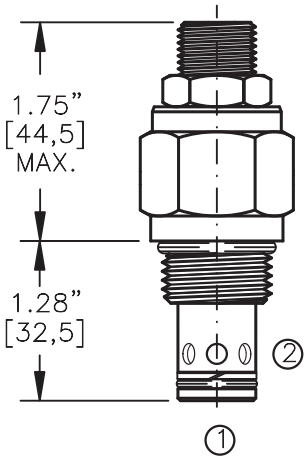

FOR ALUMINUM OR STEEL VALVE HOUSING CONFIGURATIONS SEE PAGE 0–012.1

RVPP–10–X–X–X–XX

BASIC

SIZE
10 = 7/8"–14 UNF

SEALS
N = BUNA "N"
V = VITON

ADJUSTMENT
S = ADJUSTING SCREW
C = CAPPED
T = TAMPERPROOF
K = HANDKNOB
M = METAL HANDKNOB

PRESSURE RANGE
15 = 50 TO 1500 PSI
30 = 50 TO 3000 PSI
50 = 50 TO 5000 PSI

PORTS
0 = CARTRIDGE ONLY
02BX = G 1/4" BSPP
03BX = G 3/8" BSPP
06TX = SAE – #6
08TX = SAE – #8

"A" – ALUM. HOUSING
"S" – STEEL HOUSING

FOR ADJUSTMENT CONTROL OPTIONS SEE PAGE 0–050.0

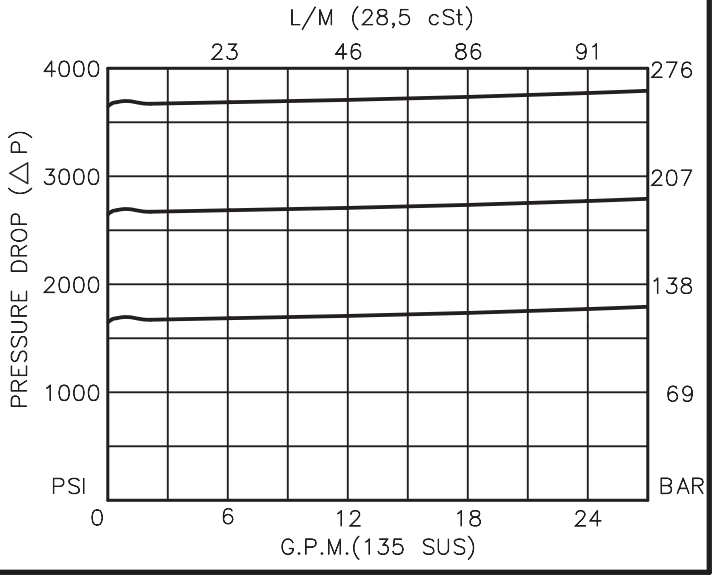

BUCHER hydraulics

WWW.SUMY.IR

RELIEF VALVE PILOT OPERATED, POPPET TYPE, FREE REVERSE FLOW

DESCRIPTION

This unit is a PILOT OPERATED, POPPET TYPE, ADJUSTABLE, HYDRAULIC PRESSURE RELIEF WITH FREE REVERSE FLOW, screw in cartridge valve.

OPERATIONS

This valve (RVPP) blocks flow from port #1 to port #2 until sufficient pressure is present at port #1 to force the pilot poppet from its seat thus opening the valve.
This cartridge relief valve offers a free reverse flow suitable for anti-cavitation and it has a very fast response and low hysteresis.

FEATURES AND BENEFITS

Leakproof screw adjustment.
Pressure in tank port (2) will add to the bias spring setting, and is limited to 2000 PSI.
Adjustment screw can not be backed out of the valve.
Overset protection-pilot spring can not go solid.
Hardened precision fitted poppet & cage provides reliable, long life.
A unique self aligning (floating) cage provides very low hysteresis and reliable operation.
All external carbon steel parts are plated for longer life against the elements.
Valve is available with screw, tamperproof, capped and handknob adjustments.
All cartridge valves are 100% functionally tested.
Industry common cavity.

SPECIFICATIONS

OPERATING PRESSURE: 5,000 PSI [350 Bar]
PROOF PRESSURE: 10,000 PSI [700 Bar]
FLOW: 26.0 GPM [100 L/M] nominal. See performance chart.
INTERNAL LEAKAGE: 5 drops/min (.25 cc/m) @ 90% of crack pressure.
DEFINITION OF CRACK: evident at 0.06 GPM (0.25 LPM)
VALVE HOUSINGS: 2500 PSI [175 Bar] = Aluminum - Anodized.
5000 PSI [350 Bar] = Steel - Unplated.
OPERATING TEMPERATURE: -40° to +250° F. [-40° to +120° C.]
OPERATING MEDIA: All general purpose hydraulic fluids such as MIL-H-5606, SAE-#10, SAE-#20, etc.
INSTALLATION: No restriction.
FILTRATION: 25 microns or better.
SEAL KIT NUMBER: SKN-1021 for Buna "N".
SKV-1021 for Viton.
WEIGHT: 0.38 lb [.17 kg] cartridge only.
VALVE CAVITY: #C1020, See Page 0-012.0.

info.el@bucherhydraulics.com www.bucherhydraulics.com/commoncavity

© 2015 by Bucher Hydraulics, Inc., 2545 Northwest Parkway, Elgin, Illinois 60124, USA
All rights reserved.
Data is provided for the purpose of product description only, and must not be construed as warranted characteristics in the legal sense. The information does not relieve users from the duty of conducting their own evaluations and tests. Because the products are subject to continual improvement, we reserve the right to amend the product specifications contained in this catalogue.

BUCHER hydraulics

RELIEF VALVE PILOT OPERATED, POPPET TYPE, FREE REVERSE FLOW

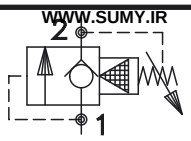

WWW.SUMY.IR

Pat, # 5,546,980

TORQUE:
Steel = 70/75 Ft–Lb. [95/102 Nm]
Aluminum = 55/60 Ft–Lb. [74/81 Nm]

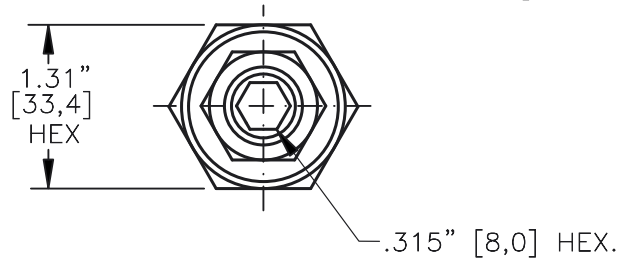

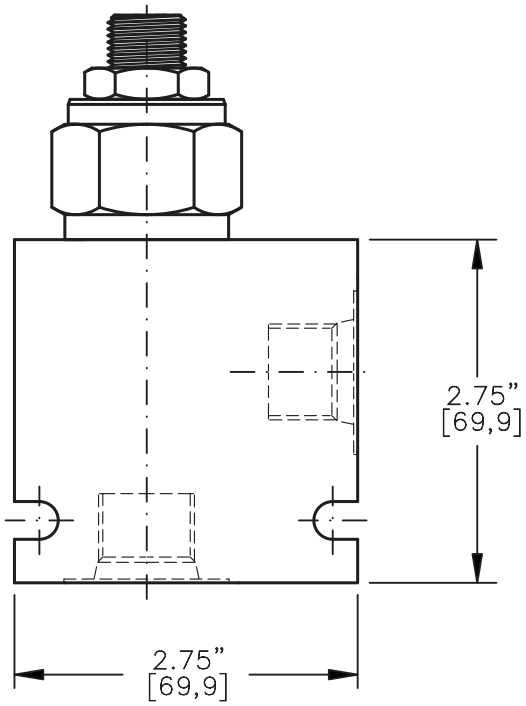

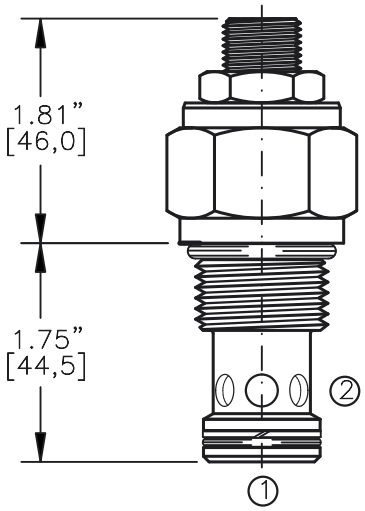

FOR ALUMINUM OR STEEL VALVE HOUSING CONFIGURATIONS SEE PAGE 0–013.1

RVPP–12–X–X–X–XX

BASIC

SIZE
12 = 1.062"–12 UNF

SEALS
N = BUNA "N"
V = VITON

ADJUSTMENT
S = ADJUSTING SCREW
C = CAPPED
T = TAMPERPROOF
K = HANDKNOB
M = METAL HANDKNOB

PRESSURE RANGE
15 = 100 TO 1500 PSI
30 = 300 TO 3000 PSI
50 = 500 TO 5000 PSI

PORTS
0 = CARTRIDGE ONLY
04BX = G 1/2" BSPP
06BX = G 3/4" BSPP
10TX = SAE – #10
12TX = SAE – #12

"A" – ALUM. HOUSING
"S" – STEEL HOUSING

FOR ADJUSTMENT CONTROL OPTIONS SEE PAGE 0–050.0

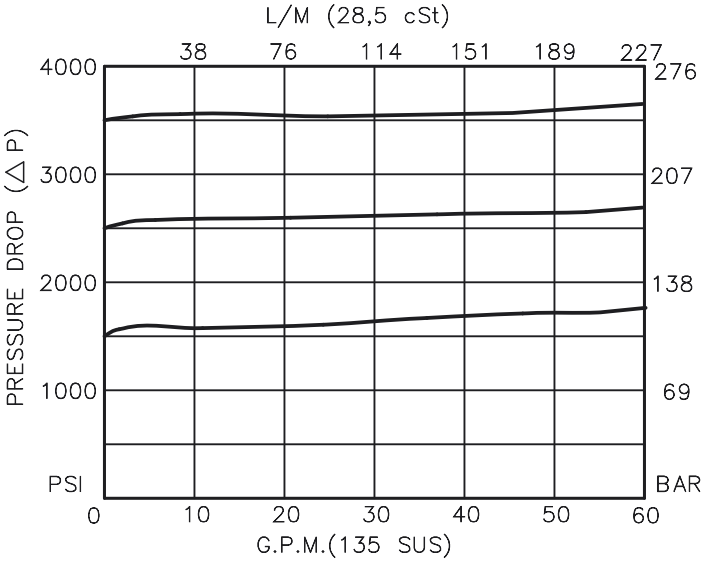

BUCHER hydraulics

WWW.SUMY.IR

RELIEF VALVE PILOT OPERATED, POPPET TYPE, FREE REVERSE FLOW

DESCRIPTION

This unit is a PILOT OPERATED, POPPET TYPE, ADJUSTABLE, HYDRAULIC PRESSURE RELIEF WITH FREE REVERSE FLOW, screw in cartridge valve.

OPERATIONS

This valve (RVPP) blocks flow from port #1 to port #2 until sufficient pressure is present at port #1 to force the pilot poppet from its seat thus opening the valve.
This cartridge relief valve offers a free reverse flow suitable for anti-cavitation and it has a very fast response and low hysteresis.

FEATURES AND BENEFITS

Leakproof screw adjustment.
Pressure in tank port (2) will add to the bias spring setting, and is limited to 2000 PSI.
Adjustment screw can not be backed out of the valve.
Overset protection-pilot spring can not go solid.
Hardened precision fitted poppet & cage provides reliable, long life.
A unique self aligning (floating) cage provides very low hysteresis and reliable operation.
All external carbon steel parts are plated for longer life against the elements.
Valve is available with screw, tamperproof, capped and handknob adjustments.
All cartridge valves are 100% functionally tested.
Industry common cavity.

SPECIFICATIONS

OPERATING PRESSURE: 5,000 PSI [350 Bar]
PROOF PRESSURE: 10,000 PSI [700 Bar]
FLOW: 60.0 GPM [230 L/M] nominal. See performance chart.
INTERNAL LEAKAGE: 5 drops/min (.25 cc/m) @ 90% of crack pressure.
DEFINITION OF CRACK: evident at 0.06 GPM (0.25 LPM)
VALVE HOUSINGS: 2500 PSI [175 Bar] = Aluminum - Anodized.
5000 PSI [350 Bar] = Steel - Unplated.
OPERATING TEMPERATURE: -40° to +250° F. [-40° to +120° C.]
OPERATING MEDIA: All general purpose hydraulic fluids such as MIL-H-5606, SAE-#10, SAE-#20, etc.
INSTALLATION: No restriction.
FILTRATION: 25 microns or better.
SEAL KIT NUMBER: SKN-1221 for Buna "N".
SKV-1221 for Viton.
WEIGHT: 0.63 lb [.25 kg] cartridge only.
VALVE CAVITY: #C1220, See Page 0-013.0.

info.el@bucherhydraulics.com www.bucherhydraulics.com/commoncavity

© 2015 by Bucher Hydraulics, Inc., 2545 Northwest Parkway, Elgin, Illinois 60124, USA
All rights reserved.
Data is provided for the purpose of product description only, and must not be construed as warranted characteristics in the legal sense. The information does not relieve users from the duty of conducting their own evaluations and tests. Because the products are subject to continual improvement, we reserve the right to amend the product specifications contained in this catalogue.

Pressure-Relief Cartridge Valve, Size SAE 08 / NG 5

Q_{max} = 10.0 gpm [37 l/min], p_{max} = 5000 psi [350 bar]
bi-directional, poppet type, adjustable
Series RVBD-08…

- Screw-in cartridge acc. to ISO 17209 – Common Cavity
- Compact construction
- For common cavities: C0820, BH/C0820 – 3/4-16 UNF
- 3 pressure ranges available
- Adjustment screw can not be backed out of valve
- A unibody cage construction provides very low hysteresis, dependable and reliable operation
- Hardened precision fitted poppet & cage provides reliable long life
- Overset protection, spring can not go solid
- All external parts are zinc-plated for longer life
- All cartridges valves are 100% functionally tested

1 Description

Series RVBD-08… pressure-relief catridges are size SAE 08 / NG 5, high performance screw-in cartridges with a 3/4-16 UNF mounting thread. This cartridge is a bi-directional pressure valve, is adjustable, has an extremely low leakage and has a conical piston design. Due to the differential range the valve can also be used as a pressure control valve. This valve relieves from port 1 to port 2 and port 2 to port 1. This valve provides a fast response, rugged, dirt tolerant operation and has a good pressure vs. flow characteristics. All external parts of the cartridge are zinc plated and are thus suitable for use in the harshest operating environments

2 Symbol

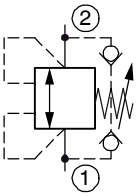

3 Technical data

General characteristics	Description, value, unit	
Designation	pressure-relief cartridge	
Design	bi-directional, poppet type, adjustable	
Mounting method	screw-in cartridge 3/4-16 UNF	
Tightening torque	see chapter 5, dimensions & sectional view	
Size	SAE 08, cavity type C0820 NG 5, cavity type BH/C0820	
Weight	0.325 lbs	[0.15 kg]
Mounting attitude	unrestricted	
Ambient temperature range	-40 °F … +248 °F	[-40 °C … +120 °C]

WWW.SUMY.IR

Hydraulic characteristics		Description, value, unit	
Maximum operating pressure	- ports 1, 2	5000 psi	[350 bar]
Maximum flow rate		10 gpm	[37 l/min]
Nominal pressure ranges		1500, 3000, 5000 psi For further pressure ranges, please contact BUCHER	[105, 210, 350 bar]
Flow direction		1 → 2 pressure relieving 2 → 1 pressure relieving	
Definition of opening		visible at 0.06 gpm	[0,25 l/min]
Internal leakage		5 cu. in./min (85 cc/min) @ 80% of opening pressure	
Hydraulic fluid		HL and HLP mineral oil to DIN 51 524; for other fluids, please contact BUCHER	
Hydraulic fluid temperature range		-13 °F … +158 °F	[-25 °C … +70 °C]
Viscosity range		10…500 mm^2/s (cSt), recommended 15...250 mm^2/s (cSt)	
Minimum fluid cleanliness Cleanliness class to ISO 4406 : 1999		class 18/16/13	

4 Performance graphs

measured with oil viscosity 33 mm^2/s (cSt)

p = f (Q) Pressure - Flow rate characteristic [p_N = 5000 psi]

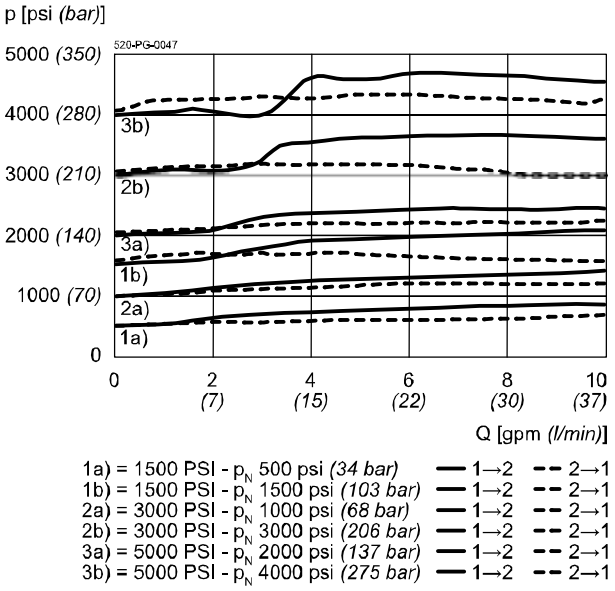

5 Dimensions & sectional view

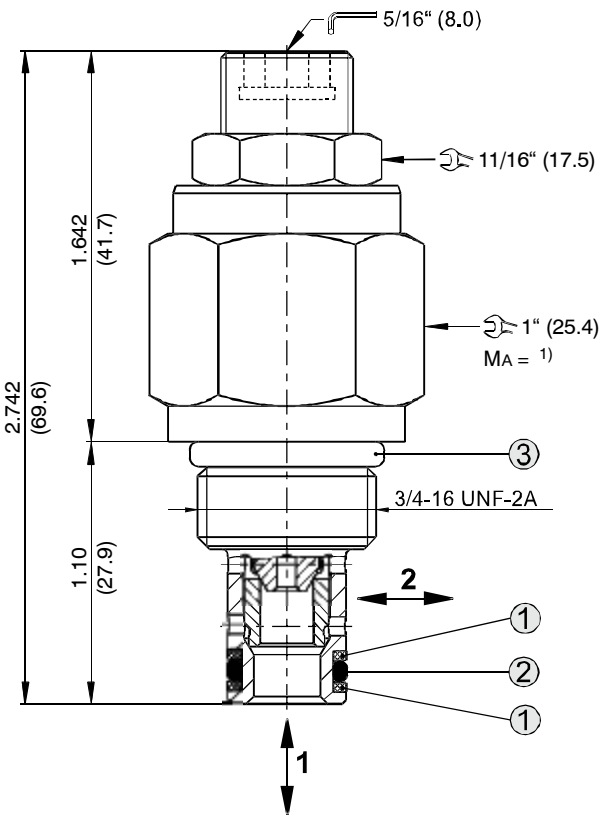

Tightening torque M_A 1)

Cavity type	C0820 – BH/C0820
When fitted in aluminium When fitted in steel	25…30 ft-lbs (34 - 42 [Nm]) 35…40 ft-lbs (47 - 54 [Nm])

6 Installation information

IMPORTANT!
When fitting the cartridges, use the specified tightening torque. No adjustments are necessary, since the cartridges are set in the factory.

ATTENTION!
Only qualified personnel with mechanical skills may carry out any maintenance work. Generally, the only work that should ever be undertaken is to check, and possibly replace, the seals. When changing seals, oil or grease the new seals thoroughly before fitting them.

Seal kit NBR no. SKN-0822 2)

Item	Qty.	Description			
1	2	Backup ring		∅ 0,390 x 0,053 x 0,048	Inch
2	1	O-ring	012	∅ 0,364 x 0,070 FKM	Inch
3	1	O-ring	908	∅ 0,664 x 2,087 FKM	Inch

IMPORTANT!
2) Seal kit with FKM (Viton) seals, no. SKV-0822

7 Ordering code

Ex. RVBD - 08 - N - S - 0 - 30 _

RVBD	=	pressure-relief valve, bi-directional
08	=	nominal size SAE 08 / NG 5
N	=	NBR (Nitrile) seals (**standard**)
V	=	FKM (Viton) seals (special seals - please contact BUCHER)
S	=	adjustment screw (**standard**)
C	=	capped adustment screw
T	=	tamperproof
K	=	handknob
M	=	metal handknob
0	=	cartridge only
06TA	=	line-mounting body SAE-6 aluminum
06TS	=	line-mounting body SAE-6 steel
15	=	pressure stage 100 … 1500 psi
30	=	pressure stage 750 … 3000 psi
50	=	pressure stage 1500 … 5000 psi
(blank)	=	without pressure setting (**standard**)
/XX	=	factory pressure setting in “100 psi” (e.g. “/12” = 1200 PSI)

8 Related data sheets

Reference	Description
520-P-000050	The form-tool loan program
520-P-000110	Cavity type C0820
400-P-040401	Cavity type BH/0820
520-P-000111	Line-mounting body, 8 Series -2-way

info.el@bucherhydraulics.com www.bucherhydraulics.com/commoncavity

© 2020 by Bucher Hydraulics, Inc., 2545 Northwest Parkway, Elgin, Illinois 60124, USA
All rights reserved.
Data is provided for the purpose of product description only, and must not be construed as warranted characteristics in the legal sense. The information does not relieve users from the duty of conducting their own evaluations and tests. Because the products are subject to continual improvement, we reserve the right to amend the product specifications contained in this catalogue.

Classification: 430.300.300.305.310.330

Pressure-Relief Cartridge Valve, Size SAE 10 / NG 8

Q_{max} = 20 gpm [75 l/min], p_{max} = 5000 psi [350 bar]
bi-directional, poppet type, adjustable
Series RVBD-10…

- Screw-in valve acc. to ISO 17209 – Common Cavity
- Compact construction
- For common cavities: C1020, AX/C1020 – 7/8-14 UNF
- 3 pressure ranges available
- Adjustment screw can not be backed out of valve
- A unibody cage construction provides very low hysteresis, dependable and reliable operation
- Hardened precision fitted poppet & cage provides reliable long life
- Overset protection, spring can not go solid
- All external parts are zinc-plated for longer life
- All cartridges valves are 100% functionally tested

1 Description

Series RVBD-10… pressure-relief catridges are size SAE 10 / NG 8, high performance screw-in cartridges with a 7/8-14 UNF mounting thread. This cartridge is a bi-directional pressure valve, is adjustable, has an extremely low leakage and has a conical piston design. Due to the differential range the valve can also be used as a pressure control valve. This valve relieves from port 1 to port 2 and port 2 to port 1. This valve provides a fast response, rugged, dirt tolerant operation and has a good pressure vs. flow characteristics. All external parts of the cartridge are zinc plated and are thus suitable for use in the harshest operating environments

2 Symbol

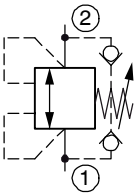

3 Technical data

General characteristics	Description, value, unit	
Designation	pressure-relief cartridge	
Design	bi-directional, poppet type, adjustable	
Mounting method	screw-in cartridge 7/8-14 UNF	
Tightening torque	see chapter 5, dimensions & sectional view	
Size	SAE 10, cavity type C1020 NG 8, cavity type AX/C1020	
Weight	0.38 lbs	[0.17 kg]
Mounting attitude	unrestricted	
Ambient temperature range	-40 °F … +248 °F	[-40 °C … +120 °C]

WWW.SUMY.IR

Hydraulic characteristics		Description, value, unit	
Maximum operating pressure	- ports 1, 2	5000 psi	[350 bar]
Maximum flow rate		20 gpm	[75 l/min]
Nominal pressure ranges		1500, 3000, 5000 psi For further pressure ranges, please contact BUCHER	[105, 210, 350 bar]
Flow direction		1 → 2 pressure relieving 2 → 1 pressure relieving	
Definition of opening		visible at 0.06 gpm	[0,25 l/min]
Internal leakage		5 cu. in./min (85 cc/min) @ 85% of opening pressure	
Hydraulic fluid		HL and HLP mineral oil to DIN 51 524; for other fluids, please contact BUCHER	
Hydraulic fluid temperature range		-13 °F … +158 °F	[-25 °C … +70 °C]
Viscosity range		10…500 mm^2/s (cSt), recommended 15...250 mm^2/s (cSt)	
Minimum fluid cleanliness Cleanliness class to ISO 4406 : 1999		class 18/16/13	

4 Performance graphs

measured with oil viscosity 33 mm^2/s (cSt)

p = f (Q) Pressure - Flow Rate / Druck-Volumenstrom

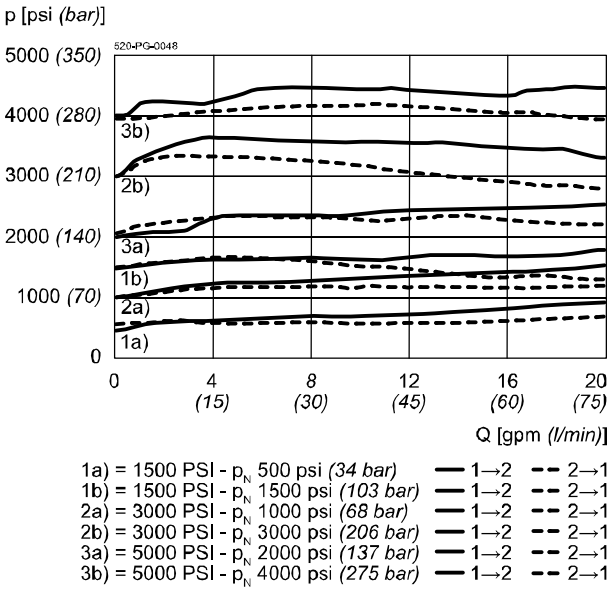

1a) = 1500 PSI - p_N 500 psi *(34 bar)* — 1→2 - - 2→1
1b) = 1500 PSI - p_N 1500 psi *(103 bar)* — 1→2 - - 2→1
2a) = 3000 PSI - p_N 1000 psi *(68 bar)* — 1→2 - - 2→1
2b) = 3000 PSI - p_N 3000 psi *(206 bar)* — 1→2 - - 2→1
3a) = 5000 PSI - p_N 2000 psi *(137 bar)* — 1→2 - - 2→1
3b) = 5000 PSI - p_N 4000 psi *(275 bar)* — 1→2 - - 2→1

5 Dimensions & sectional view

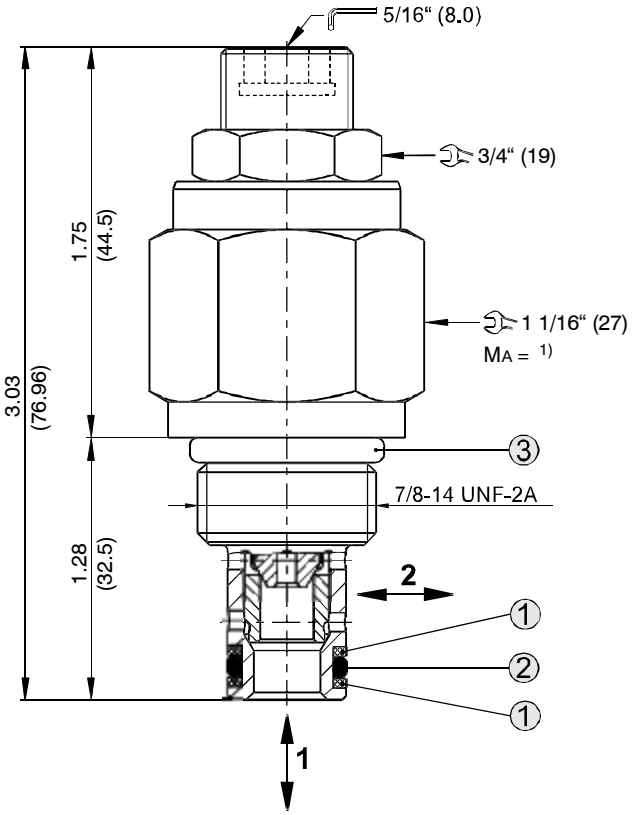

Tightening torque M_A 1)

Cavity type	C1020 – AX/C1020
When fitted in aluminium When fitted in steel	28…32 ft-lbs (38 - 43 [Nm]) 55…60 ft-lbs (74 - 81 [Nm])

6 Installation information

IMPORTANT!
When fitting the cartridges, use the specified tightening torque. No adjustments are necessary, since the cartridges are set in the factory.

ATTENTION!
Only qualified personnel with mechanical skills may carry out any maintenance work. Generally, the only work that should ever be undertaken is to check, and possibly replace, the seals. When changing seals, oil or grease the new seals thoroughly before fitting them.

Seal kit NBR no. SKN-1022 2)

Item	Qty.	Description			
1	2	Backup ring		∅ 0,518 x 0,053 x 0,048	Inch
2	1	O-ring	014	∅ 0,489 x 0,070 FKM	Inch
3	1	O-ring	910	∅ 0,775 x 0,097 FKM	Inch

IMPORTANT!
2) Seal kit with FKM (Viton) seals, no. SKV-1022

7 Ordering code

Ex. RVBD - 10 - N - S - 0 - 30 _

RVBD	=	pressure-relief valve, bi-directional
10	=	nominal size SAE 10 / NG 8
N	=	NBR (Nitrile) seals (**standard**)
V	=	FKM (Viton) seals (special seals - please contact BUCHER)
S	=	adjustment screw (**standard**)
C	=	capped adustment screw
T	=	tamperproof
K	=	handknob
M	=	metal handknob
0	=	cartridge only
06TA	=	line-mounting body SAE-6 aluminum
06TS	=	line-mounting body SAE-6 steel
08TA	=	line-mounting body SAE-8 aluminum
08TS	=	line-mounting body SAE-8 steel
15	=	pressure stage 100 … 1500 psi
30	=	pressure stage 750 … 3000 psi
50	=	pressure stage 1500 … 5000 psi
(blank)	=	without pressure setting (**standard**)
/XX	=	factory pressure setting in “100 psi” (e.g. “/12” = 1200 PSI)

8 Related data sheets

Reference (Old no.)	Description
520-P-000050	The form-tool loan program
520-P-000120	Cavity type C1020
400-P-040261	Cavity type AX/C1020
520-P-000121	Line-mounting body, 10 Series -2-way

info.el@bucherhydraulics.com www.bucherhydraulics.com/commoncavity

© 2020 by Bucher Hydraulics, Inc., 2545 Northwest Parkway, Elgin, Illinois 60124, USA
All rights reserved.
Data is provided for the purpose of product description only, and must not be construed as warranted characteristics in the legal sense. The information does not relieve users from the duty of conducting their own evaluations and tests. Because the products are subject to continual improvement, we reserve the right to amend the product specifications contained in this catalogue.

Classification: 430.300.300.305.310.330

BUCHER hydraulics

WWW.SUMY.IR

RELIEF VALVE
POPPET TYPE, BI-DIRECTIONAL (CROSS-OVER)

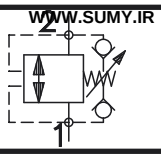

TORQUE:
Steel = 70/75 Ft-Lb. [95/102 Nm]
Aluminum = 55/60 Ft-Lb. [74/81 Nm]

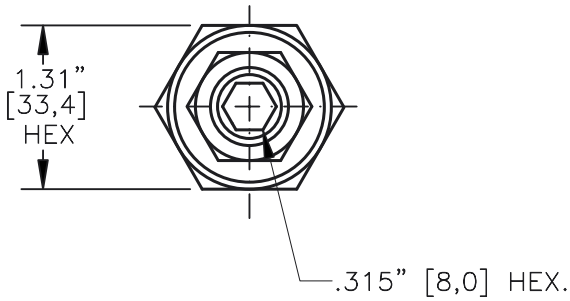

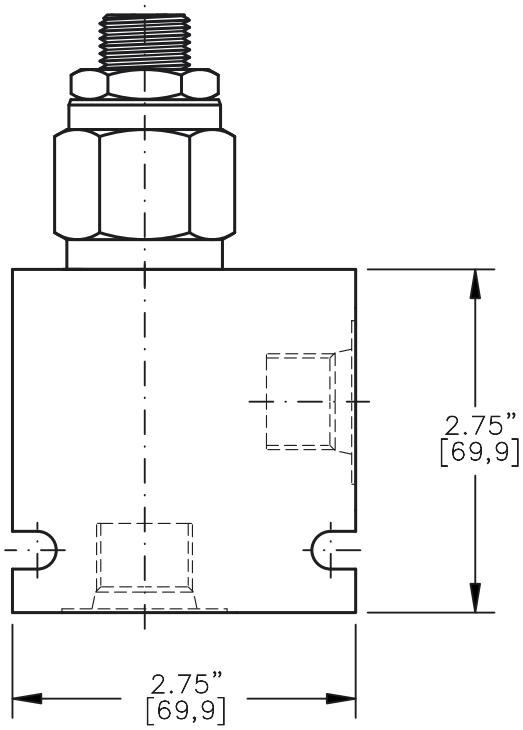

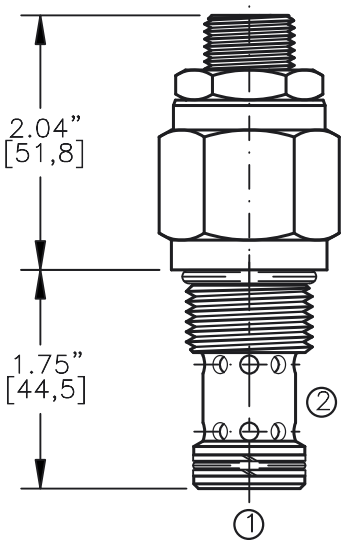

FOR ALUMINUM OR STEEL VALVE HOUSING CONFIGURATIONS SEE PAGE 0-013.1

RVBD-12-X-X-X-XX

BASIC

SIZE
12 = 1.062"-12 UNF

SEALS
N = BUNA "N"
V = VITON

ADJUSTMENT
S = ADJUSTING SCREW
C = CAPPED
T = TAMPERPROOF

PRESSURE RANGE
15 = 100 TO 1500 PSI
30 = 300 TO 3000 PSI
50 = 500 TO 5000 PSI

PORTS
0 = CARTRIDGE ONLY
04BX = G 1/2" BSPP
06BX = G 3/4" BSPP
10TX = SAE - #10
12TX = SAE - #12

"A" - ALUM. HOUSING
"S" - STEEL HOUSING

FOR ADJUSTMENT CONTROL OPTIONS SEE PAGE 0-050.0

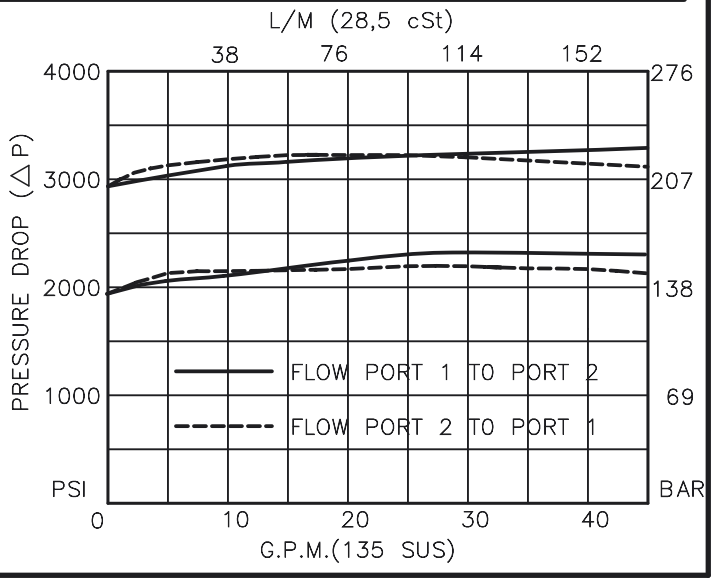

BUCHER hydraulics

WWW.SUMY.IR

RELIEF VALVE
POPPET TYPE, BI-DIRECTIONAL (CROSS-OVER)

DESCRIPTION

This unit is a CARTRIDGE STYLE, DIFFERENTIAL AREA, POPPET TYPE, BI-DIRECTIONAL, ADJUSTABLE, HYDRAULIC PRESSURE RELIEF VALVE.

OPERATIONS

This valve relieves from port 1 to port 2 and port 2 to port 1. This valve provides a fast response, rugged, dirt tolerant operation and has a good pressure vs. flow characteristics.

FEATURES AND BENEFITS

Leakproof screw adjustment is standard.
Adjustment screw can not be backed out of the valve.
Overset protection – spring can not go solid.
Hardened precision fitted poppet & cage provides reliable, long life.
A unibody cage construction provides very low hysteresis, dependable and reliable operation.
All external carbon steel parts are plated for longer life against the elements.
Valve is available with screw, tamperproof, capped and handknob adjustments.
All cartridge valves are 100% functionally tested.
Industry common cavity.

SPECIFICATIONS

OPERATING PRESSURE: 5,000 PSI [350 Bar]
PROOF PRESSURE: 10,000 PSI [700 Bar]
FLOW: 40.0 GPM [152 L/M] nominal. See performance chart.
INTERNAL LEAKAGE: 5 cu.in/min [85 cc/m] @ 85% of crack pressure.
DEFINITION OF CRACK: evident at 0.06 GPM [0.25 LPM]
VALVE HOUSINGS: 2500 PSI [175 Bar] = Aluminum – Anodized.
5000 PSI [350 Bar] = Steel – Unplated.
OPERATING TEMPERATURE: –40° to +250° F. [–40° to +120° C.]
OPERATING MEDIA: All general purpose hydraulic fluids such as MIL–H–5606, SAE–#10, SAE–#20, etc.
INSTALLATION: No restriction.
FILTRATION: 25 microns or better.
SEAL KIT NUMBER: SKN–1222 for buna "N".
SKV–1222 for viton.
WEIGHT: 0.68 lb [.34 kg] cartridge only.
VALVE CAVITY: #C1220, See Page 0–013.0.

info.el@bucherhydraulics.com www.bucherhydraulics.com/commoncavity

© 2015 by Bucher Hydraulics, Inc., 2545 Northwest Parkway, Elgin, Illinois 60124, USA
All rights reserved.
Data is provided for the purpose of product description only, and must not be construed as warranted characteristics in the legal sense. The information does not relieve users from the duty of conducting their own evaluations and tests. Because the products are subject to continual improvement, we reserve the right to amend the product specifications contained in this catalogue.

Pressure-Relief Cartridge Valve, Size SAE 08 / NG 5

Q_{max} = 6.0 gpm [22 l/min], p_{max} = 5000 psi [350 bar]
direct acting, poppet type, adjustable
Series RVDI-08…

- Screw-in cartridge according to ISO 17209 – Common Cavity
- Compact construction
- For common cavities: C0820 or BH/C0820 – 3/4-16 UNF
- 3 pressure ranges available
- Adjustment screw can not be backed out of valve
- A unibody cage construction provides very low hysteresis, dependable and reliable operation
- Hardened precision fitted poppet & cage provides reliable long life
- Overset protection, spring can not go solid
- All external parts are zinc-plated for longer life
- All cartridges valves are 100% functionally tested

1 Description

Series RVDI-08… pressure-relief catridges are size SAE 08 / NG 5, high performance screw-in cartridges with a 3/4-16 UNF mounting thread. This unit is a direct acting relief valve, cartridge type, poppet type, low leakage, screw in type, adjustable, pressure control valve. This valve blocks flow from port 1 to port 2 until sufficient pressure is present at port 1 to force the poppet from its seat thus opening the valve. This cartridge relief valve offers a smooth transition in response to a load change in a hydraulic circuit. All external parts of the cartridge are zinc plated and are thus suitable for use in the harshest operating environments.

2 Symbol

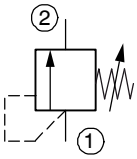

3 Technical data

General characteristics	Description, value, unit	
Designation	pressure-relief cartridge	
Design	direct acting, poppet type, adjustable	
Mounting method	screw-in cartridge 3/4-16 UNF	
Tightening torque	see chapter 5, Dimensions & sectional view	
Size	SAE 08, cavity type C0820 NG 5, cavity type BH/C0820	
Weight	0.33 lbs	[0.15 kg]
Mounting attitude	unrestricted	
Ambient temperature range	-40 °F … +248 °F	[-40 °C … +120 °C]

WWW.SUMY.IR

Hydraulic characteristics	Description, value, unit
Maximum operating pressure - ports 1, 2	5000 psi [350 bar]
Maximum flow rate	6 gpm [22 l/min]
Nominal pressure ranges	1500, 3000, 5000 psi [105, 210, 350 bar] For further pressure ranges, please contact BUCHER
Flow direction	1 → 2 pressure relieving
Definition of opening	visible at 0.06 gpm [0,25 l/min]
Internal leakage	15 drops/min (0.75 cc/min) @ 80% of opening pressure
Hydraulic fluid	HL and HLP mineral oil to DIN 51 524; for other fluids, please contact BUCHER
Hydraulic fluid temperature range	-13 °F … +158 °F [-25 °C … +70 °C]
Viscosity range	10…500 mm^2/s (cSt), recommended 15...250 mm^2/s (cSt)
Minimum fluid cleanliness Cleanliness class to ISO 4406 : 1999	class 18/16/13

4 Performance graphs

measured with oil viscosity 33 mm^2/s (cSt)

p = f (Q) Pressure - Flow rate characteristic [p_N = 5000 psi]

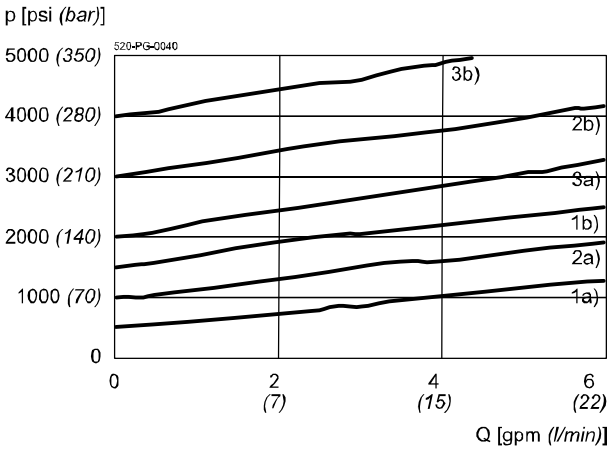

1a) = 1500 PSI - p_N 500 psi *(34 bar)*
1b) = 1500 PSI - p_N 1500 psi *(103 bar)*
2a) = 3000 PSI - p_N 1000 psi *(68 bar)*
2b) = 3000 PSI - p_N 3000 psi *(206 bar)*
3a) = 5000 PSI - p_N 2000 psi *(137 bar)*
3b) = 5000 PSI - p_N 4000 psi *(275 bar)*

5 Dimensions & sectional view

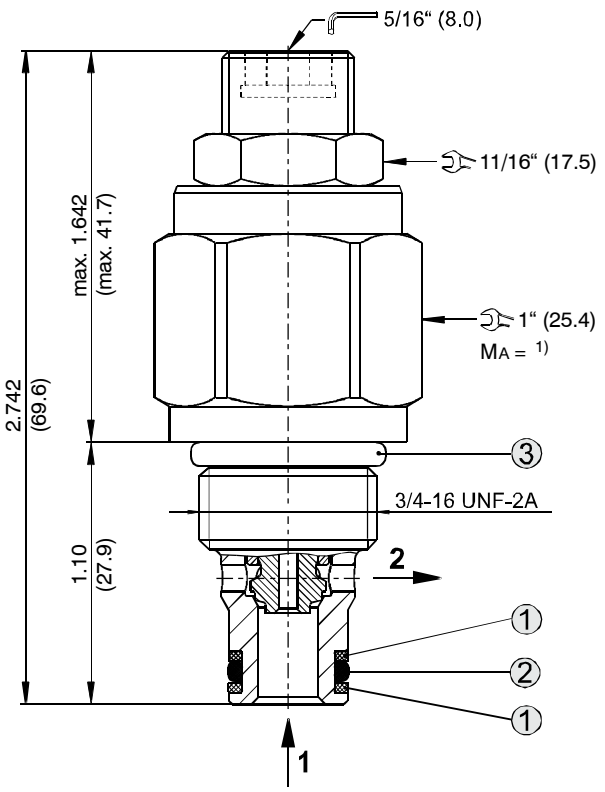

Tightening torque M_A 1)

Cavity type	C0820 – BH/C0820
When fitted in aluminium When fitted in steel	25…30 ft-lbs (34 - 42 [Nm]) 35…40 ft-lbs (47 - 54 [Nm])

6 Installation information

IMPORTANT!
When fitting the cartridges, use the specified tightening torque. No adjustments are necessary, since the cartridges are set in the factory.

ATTENTION!
Only qualified personnel with mechanical skills may carry out any maintenance work. Generally, the only work that should ever be undertaken is to check, and possibly replace, the seals. When changing seals, oil or grease the new seals thoroughly before fitting them.

Seal kit NBR no. SKN-0822 2)

Item	Qty.	Description			
1	2	Backup ring		∅ 0,390 x 0,053 x 0,048	Inch
2	1	O-ring	012	∅ 0,364 x 0,070 FKM	Inch
3	1	O-ring	908	∅ 0,644 x 0,087 FKM	Inch

IMPORTANT!
2) Seal kit with FKM (Viton) seals, no. SKV-0822

7 Ordering code

Ex. RVDI - 08 - N - S - 0 - 30 _

RVDI	=	pressure-relief valve
08	=	nominal size SAE 08 / NG 5
N	=	NBR (Nitrile) seals (**standard**)
V	=	FKM (Viton) seals (special seals - please contact BUCHER)
S	=	adjustment screw (**standard**)
C	=	capped adustment screw
T	=	tamperproof adjustment screw
K	=	handknob
M	=	metal handknob
0	=	cartridge only
06TA	=	line-mounting body SAE-6 aluminum
06TS	=	line-mounting body SAE-6 steel
15	=	pressure stage 100 … 1500 psi
30	=	pressure stage 750 … 3000 psi
50	=	pressure stage 1500 … 5000 psi
(blank)	=	without pressure settting (**standard**)
/XX	=	factory pressure settting in „100 psi“ (e.g. „/12„ = 1200 psi) on request

8 Related data sheets

Reference (Old no.)	Description
520-P-000050	The form-tool loan program
520-P-000110	Cavity type C0820
400-P-040401	Cavity type BH/0820
520-P-000111	Line-mounting body, 8 Series -2-way

info.el@bucherhydraulics.com www.bucherhydraulics.com/commoncavity

© 2020 by Bucher Hydraulics, Inc., 2545 Northwest Parkway, Elgin, Illinois 60124, USA
All rights reserved.
Data is provided for the purpose of product description only, and must not be construed as warranted characteristics in the legal sense. The information does not relieve users from the duty of conducting their own evaluations and tests. Because the products are subject to continual improvement, we reserve the right to amend the product specifications contained in this catalogue.

Classification: 430.300.305.305.310.330

RELIEF VALVE DIRECT ACTING, POPPET TYPE

WWW.SUMY.IR

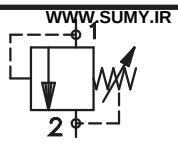

TORQUE:
Steel = 55/60 Ft–Lb. [74/81 Nm]
Aluminum = 35/40 Ft–Lb. [47/54 Nm]

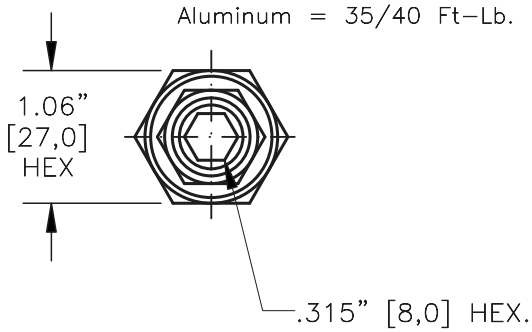

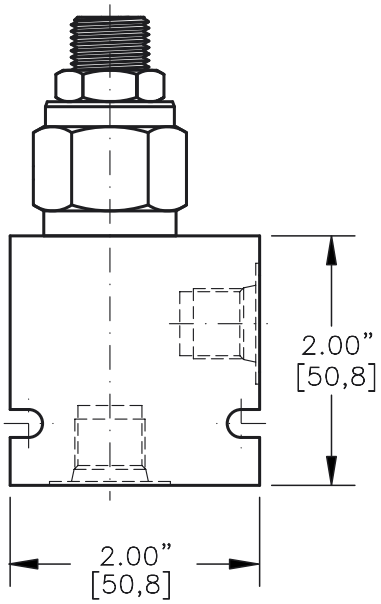

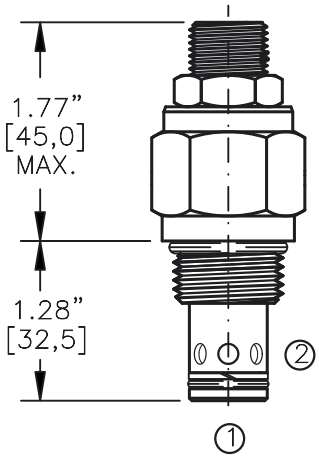

FOR ALUMINUM OR STEEL VALVE HOUSING CONFIGURATIONS SEE PAGE 0–012.1

RVDI–10–X–X–X–XX

BASIC

SIZE
10 = 7/8"–14 UNF

SEALS
N = BUNA "N"
V = VITON

ADJUSTMENT
S = ADJUSTING SCREW
C = CAPPED
T = TAMPERPROOF
K = HANDKNOB
M = METAL HANDKNOB

PRESSURE RANGE
15 = 100 TO 1500 PSI
30 = 300 TO 3000 PSI
50 = 500 TO 5000 PSI

PORTS
0 = CARTRIDGE ONLY
02BX = G 1/4" BSPP
03BX = G 3/8" BSPP
06TX = SAE – #6
08TX = SAE – #8

"A" – ALUM. HOUSING
"S" – STEEL HOUSING

FOR ADJUSTMENT CONTROL OPTIONS SEE PAGE 0–050.0

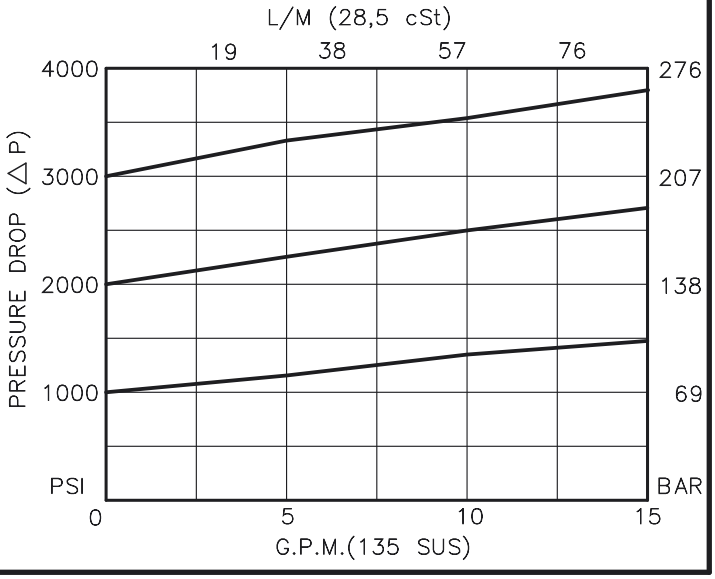

WWW.SUMY.IR

RELIEF VALVE DIRECT ACTING, POPPET TYPE

DESCRIPTION

This unit is a DIRECT ACTING RELIEF VALVE, cartridge type, poppet type, low leackage, screw in type, adjustable, pressure control valve.

OPERATIONS

This valve (RVDI) blocks flow from port #1 to port #2 until sufficient pressure is present at port #1 to force the poppet from its seat thus opening the valve.
This cartridge relief valve offers a smooth transition in response to a load change in a hydraulic circuit.

FEATURES AND BENEFITS

Leakproof screw adjustment.
Adjustment screw can not be backed out of valve.
Overset protection – spring can not go solid.
Hardened precision fitted poppet & cage provides reliable, long life.
All external carbon steel parts are plated for longer life against the elements.
Valve is available with screw, tamperproof, capped and handknob adjustments.
All cartridge valves are 100% functionally tested.
Industry common cavity.

SPECIFICATIONS

OPERATING PRESSURE: 5,000 PSI [350 Bar]
PROOF PRESSURE: 10,000 PSI [700 Bar]
FLOW: 10.0 GPM [38 L/M] nominal. See performance chart.
INTERNAL LEAKAGE: 5 drops/min [.25 cc/m] @ 85% of crack pressure.
DEFINITION OF CRACK: evident at 0.06 GPM [0.25 LPM]
VALVE HOUSINGS: 2500 PSI [175 Bar] = Aluminum – Anodized.
5000 PSI [350 Bar] = Steel – Unplated.
OPERATING TEMPERATURE: –40° to +250° F. [–40° to +120° C.]
OPERATING MEDIA: All general purpose hydraulic fluids such as MIL–H–5606, SAE–#10, SAE–#20, etc.
INSTALLATION: No restriction.
FILTRATION: 25 microns or better.
SEAL KIT NUMBER: SKN–1021 for Buna "N".
SKV–1021 for Viton.
WEIGHT: 0.38 lb [.17 kg] cartridge only.
VALVE CAVITY: #C1020, See Page 0–012.0.

info.el@bucherhydraulics.com www.bucherhydraulics.com/commoncavity

© 2015 by Bucher Hydraulics, Inc., 2545 Northwest Parkway, Elgin, Illinois 60124, USA
All rights reserved.
Data is provided for the purpose of product description only, and must not be construed as warranted characteristics in the legal sense. The information does not relieve users from the duty of conducting their own evaluations and tests. Because the products are subject to continual improvement, we reserve the right to amend the product specifications contained in this catalogue.

BUCHER hydraulics

BREAKER RELIEF VALVE PILOT OPERATED, SLIDING SPOOL, KICK-DOWN VALVE.

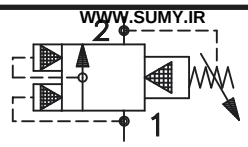

WWW.SUMY.IR

Pat.#5,546,980

TORQUE:
Steel = 55/60 Ft-Lb. [74/81 Nm]
Aluminum = 35/40 Ft-Lb. [47/54 Nm]

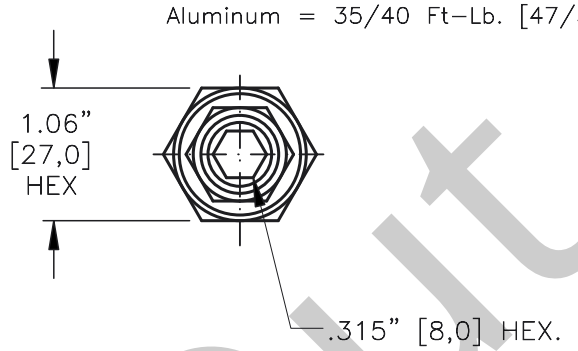

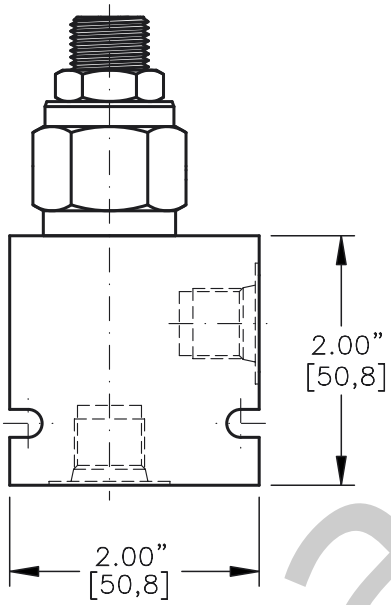

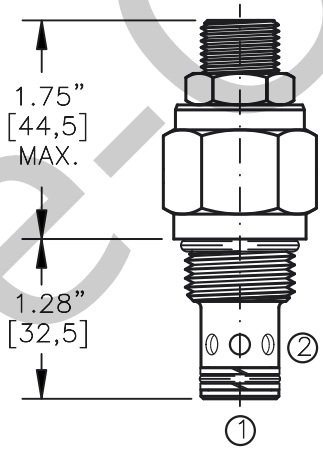

Phase-Out

FOR ALUMINUM OR STEEL VALVE HOUSING CONFIGURATIONS SEE PAGE 0-012.1

RVBS-10-X-X-X-XX

BASIC

SIZE
10 = 7/8"-14 UNF

SEALS
N = BUNA "N"
V = VITON

ADJUSTMENT
S = ADJUSTING SCREW
C = CAPPED
T = TAMPERPROOF
K = HANDKNOB
M = METAL HANDKNOB

PRESSURE RANGE
15 = 50 TO 1500 PSI
30 = 50 TO 3000 PSI
50 = 50 TO 5000 PSI

PORTS
0 = CARTRIDGE ONLY
02BX = G 1/4" BSPP
03BX = G 3/8" BSPP
06TX = SAE - #6
08TX = SAE - #8

"A" - ALUM. HOUSING
"S" - STEEL HOUSING

FOR ADJUSTMENT CONTROL OPTIONS SEE PAGE 0-050.0

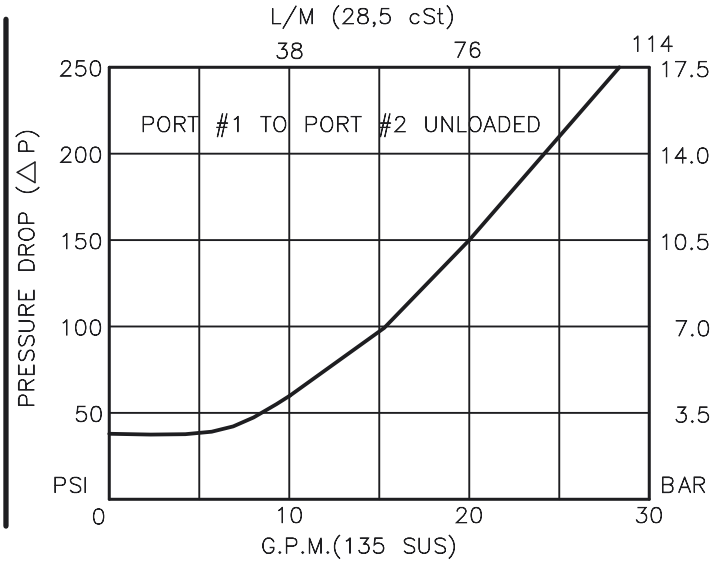

BUCHER hydraulics

WWW.SUMY.IR

BREAKER RELIEF VALVE
PILOT OPERATED, SLIDING SPOOL, KICK-DOWN VALVE.

DESCRIPTION

This unit is a PILOT OPERATED, SLIDING SPOOL, PRESSURE BREAKER RELIEF VALVE,cartridge style, screw in type valve.

OPERATIONS

This valve (RVBS) blocks flow from port #1 to port #2 until sufficient pressure is present at port #1 to force the pilot poppet from its seat thus opening the valve and unloads the system to a low pressure. Acts as a circuit breaker in a hydraulic system.
After the flow and pressure is removed from the valve the valve will re-set itself to the original pressure setting.

FEATURES AND BENEFITS

Leakproof screw adjustment.
Pressure in tank port (2) will add to the bias spring setting, and is limited to 2000 PSI.
Adjustment screw can not be backed out of the valve.
Overset protection - pilot spring can not go solid.
Hardened precision fitted spool & cage provides reliable, long life.
A unique self aligning (floating) cage provides very low hysteresis and reliable operation.
All external carbon steel parts are plated for longer life against the elements.
Valve is available with screw, tamperproof, capped and handknob adjustments.
All cartridge valves are 100% functionally tested.
Industry common cavity.

SPECIFICATIONS

OPERATING PRESSURE: 5,000 PSI [350 Bar]
PROOF PRESSURE: 10,000 PSI [700 Bar]
FLOW: 25.0 GPM [95 L/M] nominal. See performance chart.
INTERNAL LEAKAGE: 5 cu.in/min [85 cc/m] @ 95% of crack pressure.
DEFINITION OF CRACK: evident at 0.06 GPM [0.25 LPM]
VALVE HOUSINGS: 2500 PSI [175 Bar] = Aluminum - Anodized.
5000 PSI [350 Bar] = Steel - Unplated.
OPERATING TEMPERATURE: -40° to +250° F. [-40° to +120° C.]
OPERATING MEDIA: All general purpose hydraulic fluids such as MIL-H-5606, SAE-#10, SAE-#20, etc.
INSTALLATION: No restriction.
FILTRATION: 25 microns or better.
SEAL KIT NUMBER: SKN-1022 for Buna "N".
SKV-1022 for Viton.
WEIGHT: 0.38 lb [.17 kg] cartridge only.
VALVE CAVITY: #C1020, See Page 0-012.0.

info.el@bucherhydraulics.com www.bucherhydraulics.com/commoncavity

© 2015 by Bucher Hydraulics, Inc., 2545 Northwest Parkway, Elgin, Illinois 60124, USA
All rights reserved.
Data is provided for the purpose of product description only, and must not be construed as warranted characteristics in the legal sense. The information does not relieve users from the duty of conducting their own evaluations and tests. Because the products are subject to continual improvement, we reserve the right to amend the product specifications contained in this catalogue.

Phase-Out

BUCHER hydraulics

DIFFERENTIAL AREA UNLOADING RELIEF VALVE

WWW.SUMY.IR

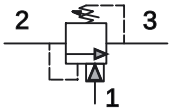

TORQUE:
Steel = 55/60 Ft–Lb. [74/81 Nm]
Aluminum = 35/40 Ft–Lb. [47/54 Nm]

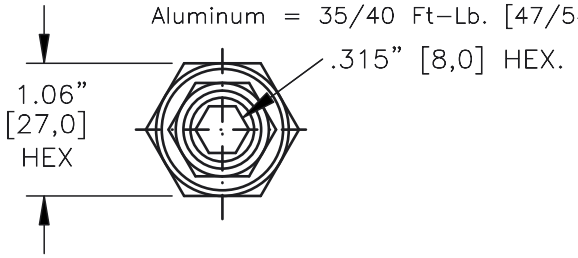

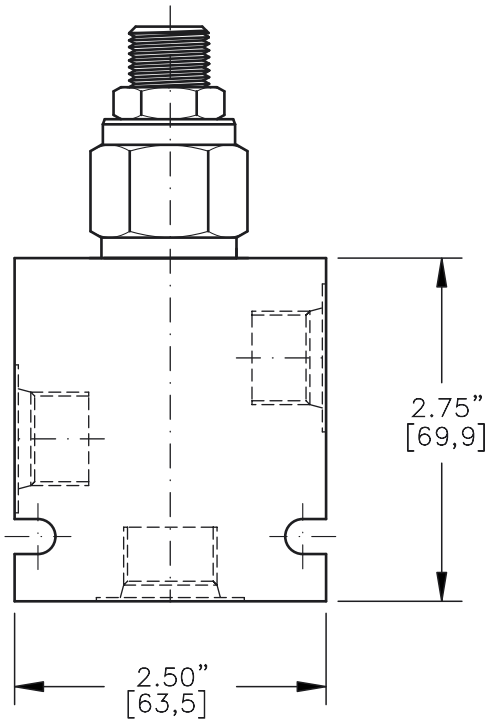

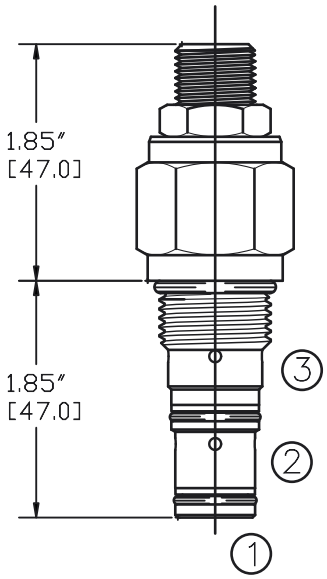

FOR ALUMINUM OR STEEL VALVE HOUSING CONFIGURATIONS SEE PAGE 0–032.1

PUVA–10–N–X–X–X–XX

BASIC

SIZE
10 = 7/8"–14 UNF

SEALS
N = BUNA "N"
V = VITON

ADJUSTMENT
S = ADJUSTING SCREW
C = CAPPED
T = TAMPERPROOF
K = HANDKNOB
M = METAL HANDKNOB

PORTS
0 = CARTRIDGE ONLY
02BX = G 1/4" BSPP
03BX = G 3/8" BSPP
06TX = SAE – #6
08TX = SAE – #8

"A" – ALUM. HOUSING
"S" – STEEL HOUSING

RATIO
7 = 70%
8 = 80%
9 = 90%

PRESSURE RANGE
20 = 50 TO 2000 PSI
40 = 50 TO 4000 PSI

FOR ADJUSTMENT CONTROL OPTIONS SEE PAGE 0–050.0

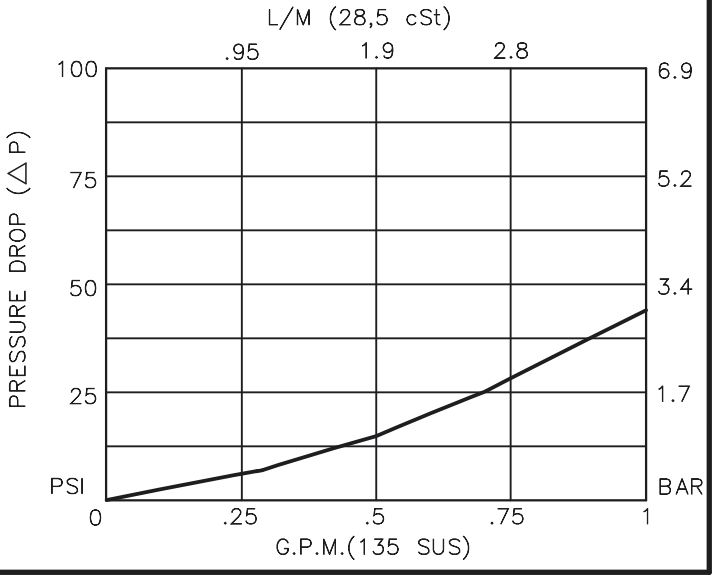

BUCHER hydraulics

WWW.SUMY.IR

DIFFERENTIAL AREA UNLOADING RELIEF VALVE

DESCRIPTION

This unit is a DIRECT ACTING, SCREW IN CARTRIDGE STYLE, HYDRAULIC 3-WAY, 2 POS. UNLOADING VALVE, which can be dumped or unloaded via a remote pilot signal. This valve is used as the pilot stage of a two-stage unloading valve.

OPERATIONS

This valve provides a fixed percentage between load and unload pressures. The fixed differential area is provided by the pilot spool which has a greater area than the pilot seat. When pressure at the pilot port 1 reaches the spring setting, the valve opens and unloads pressure port 2 to tank port 3. The greater area of the spool holds the pilot poppet off its seat until pressure at pilot port 1 drops to the RATIO percentage of the spring setting, at which point the valve closes. This valve to be used as a pilot valve in hydraulic unloading valve applications.

FEATURES AND BENEFITS

Hardened precision fitted spool and cage provides reliable, long life.
A unibody cage construction provides very low hysteresis and reliable operation.
All external carbon steel parts are plated for longer life against the elements.
All cartridge valves are 100% functionally tested.
Industry common cavity.

SPECIFICATIONS

OPERATING PRESSURE: 5,000 PSI [350 Bar]
PROOF PRESSURE: 10,000 PSI [700 Bar]
FLOW: 1.0 GPM [3,8 L/M] nominal. See performance chart.
INTERNAL LEAKAGE: 5 drops/min [.25 cc/m] @ PORT1.
DEFINITION OF CRACK: evident at 0.06 GPM [0.25 LPM]
VALVE HOUSINGS: 2500 PSI [175 Bar] = Aluminum - Anodized.
5000 PSI [350 Bar] = Steel - Unplated.
OPERATING TEMPERATURE: -40° to +250° F. [-40° to +120° C.]
OPERATING MEDIA: All general purpose hydraulic fluids such as MIL-H-5606, SAE-#10, SAE-#20, etc.
INSTALLATION: No restriction.
FILTRATION: 25 microns or better.
SEAL KIT NUMBER: SKN-1022 for Buna "N".
SKV-1022 for Viton.
WEIGHT: 0.42 lbs [0,19 kg] cartridge only.
VALVE CAVITY: #C1030, See Page 0-032.1.

info.el@bucherhydraulics.com www.bucherhydraulics.com/commoncavity

© 2015 by Bucher Hydraulics, Inc., 2545 Northwest Parkway, Elgin, Illinois 60124, USA
All rights reserved.
Data is provided for the purpose of product description only, and must not be construed as warranted characteristics in the legal sense. The information does not relieve users from the duty of conducting their own evaluations and tests. Because the products are subject to continual improvement, we reserve the right to amend the product specifications contained in this catalogue.

BUCHER hydraulics

NORMALLY OPEN SOLENOID VENTED RELIEF VALVE, PILOT OPERATED, SPOOL TYPE (2/2)

WWW.SUMY.IR

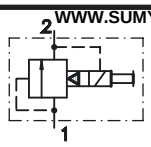

TORQUE:
Steel = 55/60 Ft–Lb. [74/81 Nm]
Aluminum = 35/40 Ft–Lb. [47/54 Nm]

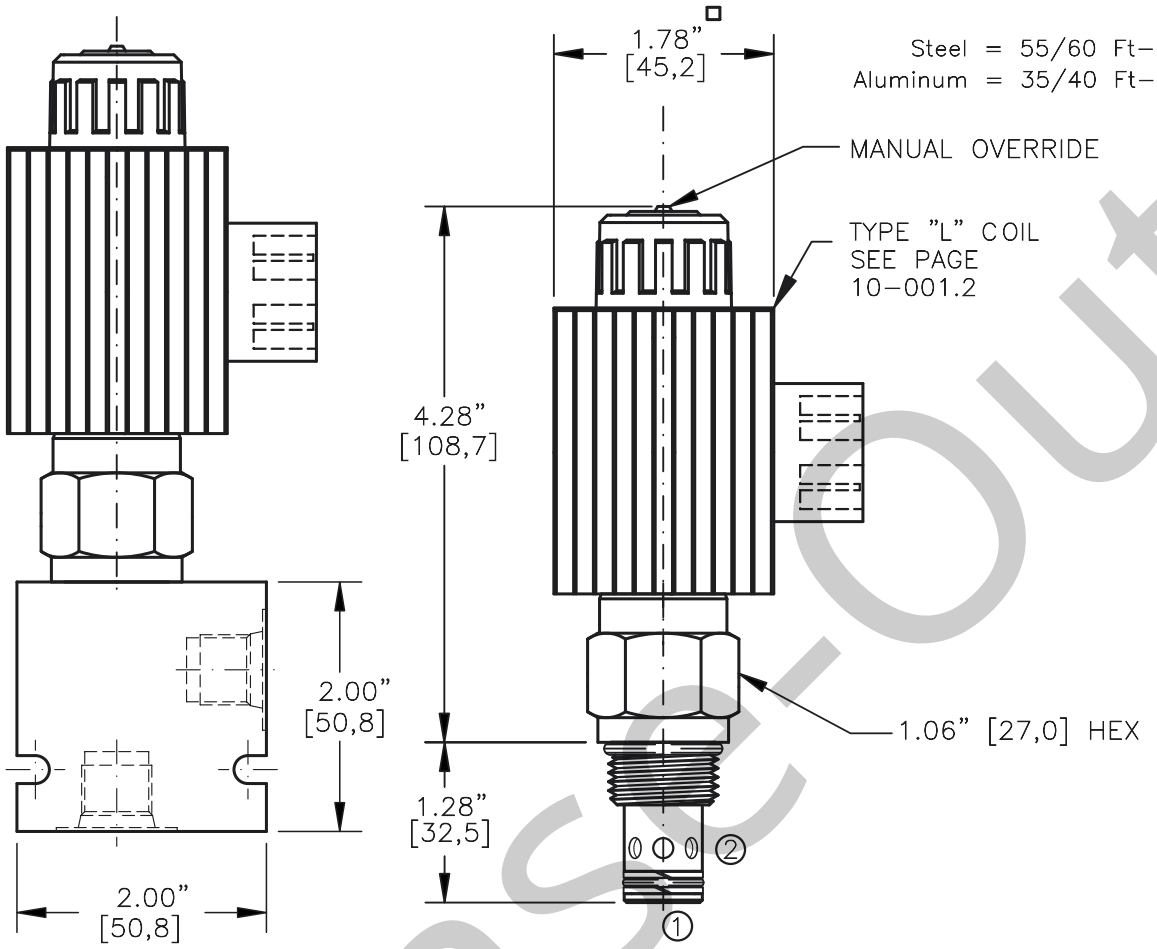

NOTES:
1. FOR ALUMINUM OR STEEL VALVE HOUSING CONFIGURATIONS SEE PAGE 0–012.1
2. SOLENOIDS AVAILABLE WITH DIODES – CONSULT FACTORY.
3. ALL A.C. COILS ARE INTERNALLY A.C. TO D.C. RECTIFIED...
4. FOR CONTINUOUS ENERGIZED OR HIGH AMBIENT TEMPERATURE (>120°F) APPLICATION CONSULT FACTORY FOR FURTHER DETAILS

ESRV–10–X–XX–X–XXX X

BASIC

SIZE
10 = 7/8"–14UNF

SEALS
N = BUNA "N"
V = VITON

REGULATED PRESSURE
10 = 1000 PSI
15 = 1500 PSI
20 = 2000 PSI
25 = 2500 PSI
30 = 3000 PSI
35 = 3500 PSI
* FOR CUSTOM SETTINGS CONSULT FACTORY

PORTS
0 = CARTRIDGE ONLY
02BX = G 1/4" BSPP
03BX = G 3/8" BSPP
06TX = SAE – #6
08TX = SAE – #8
"A" = ALUM. HOUSING
"S" = STEEL HOUSING

VOLTAGE AMPS
12D = 12 VDC 3.00
24D = 24 VDC 1.50
36D = 36 VDC 1.00
48D = 48 VDC 0.75
110D = 110 VDC 0.33
115A = 115 VAC 0.32
230A = 230 VAC 0.16

TERMINALS
L = 18GA. 24" LEADS
T = SPADE TERM.
B = BOLT TERM.
G = DIN43650
W = WEATHER–PACK
D = DEUTSCH–DT04–2P
M = METRI–PACK CONN.

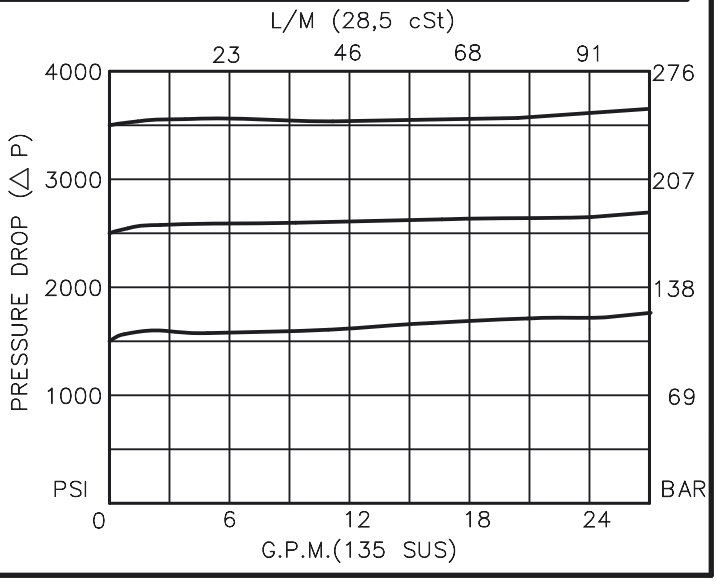

Phase-Out

BUCHER hydraulics

WWW.SUMY.IR

NORMALLY OPEN SOLENOID VENTED RELIEF VALVE, PILOT OPERATED, SPOOL TYPE (2/2)

DESCRIPTION

This unit is a NORMALLY OPEN, TWO POSITION, cartridge type, spool type, pilot operated, screw in type, solenoid operated, hydraulic relief valve.

OPERATIONS

When the solenoid coil is de-energized, this valve allows flow from port 1 to port 2 (tank). When the solenoid coil is energized this valve blocks flow from port 1 to port 2. When the solenoid coil is energized and the pressure at port 1 exceeds the relief pressure setting, this valve will open and allow flow from port 1 to port 2.

Manual Operator Standard: Push in and hold a small plunger on top of the valve with a screw driver or a similar plunger smaller then .188" dia.

FEATURES AND BENEFITS

Continuous-duty, very low heat rise & waterproof solenoid coil.
Interchangeable solenoid coils & terminations options available.
Pressure in tank port (2) will add to the bias spring setting, and is limited to 2000 PSI.
Hardened precision fitted spool & sleeve provides reliable, long life.
A unique self aligning (floating) cage provides very low hysteresis and reliable operation.
Very efficient, wet-armature solenoid core tube construction.
All external carbon steel parts are plated for longer life against the elements.
All cartridge valves are 100% functionally tested.
Industry common cavity.

SPECIFICATIONS

OPERATING PRESSURE: 5000 PSI [350 Bar]
PROOF PRESSURE: 10,000 PSI [700 Bar]
FLOW: 26.0 GPM [100 L/M] nominal. See performance chart.
INTERNAL LEAKAGE: 5 cu.in/min [85 cc/m] @ 95% of crack pressure.
INTERNAL PILOT FLOW: 60 cu.in/min [1,0 l/m] @ 3000 PSI [210 Bar]
VALVE HOUSINGS: 2500 PSI [175 Bar] = Aluminum - Anodized.
5000 PSI [350 Bar] = Steel - Unplated.
OPERATING TEMPERATURE: -40° to +250° F. [-40° to +120° C.]
OPERATING MEDIA: All general purpose hydraulic fluids such as MIL-H-5606, SAE-#10, SAE-#20, etc.
SEAL KIT: SKN-1022 Buna "N"
SKV-1022 Viton
INSTALLATION: No restrictions.
WEIGHT: 1.90 lb [0,86 kg] cartridge with coil only.
VALVE CAVITY: #C1020, See Page 0-012.0.

info.el@bucherhydraulics.com www.bucherhydraulics.com/commoncavity

© 2015 by Bucher Hydraulics, Inc., 2545 Northwest Parkway, Elgin, Illinois 60124, USA
All rights reserved.
Data is provided for the purpose of product description only, and must not be construed as warranted characteristics in the legal sense. The information does not relieve users from the duty of conducting their own evaluations and tests. Because the products are subject to continual improvement, we reserve the right to amend the product specifications contained in this catalogue.

Phase-Out

BUCHER hydraulics

PROPORTIONAL PRESSURE RELIEF VALVE. PILOT OPERATED, SLIDING SPOOL TYPE.

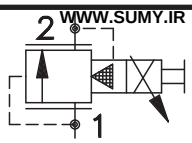

WWW.SUMY.IR

Pat.#5,546,980

TORQUE:
Steel = 55/60 Ft–Lb. [74/81 Nm]
Aluminum = 35/40 Ft–Lb. [47/54 Nm]

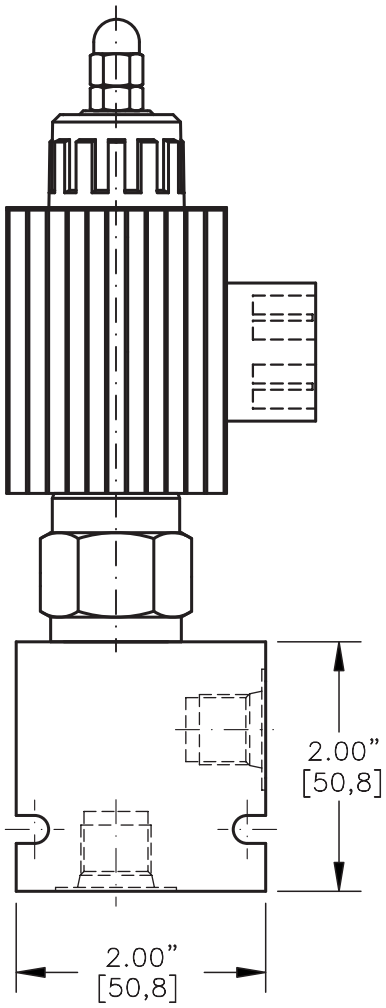

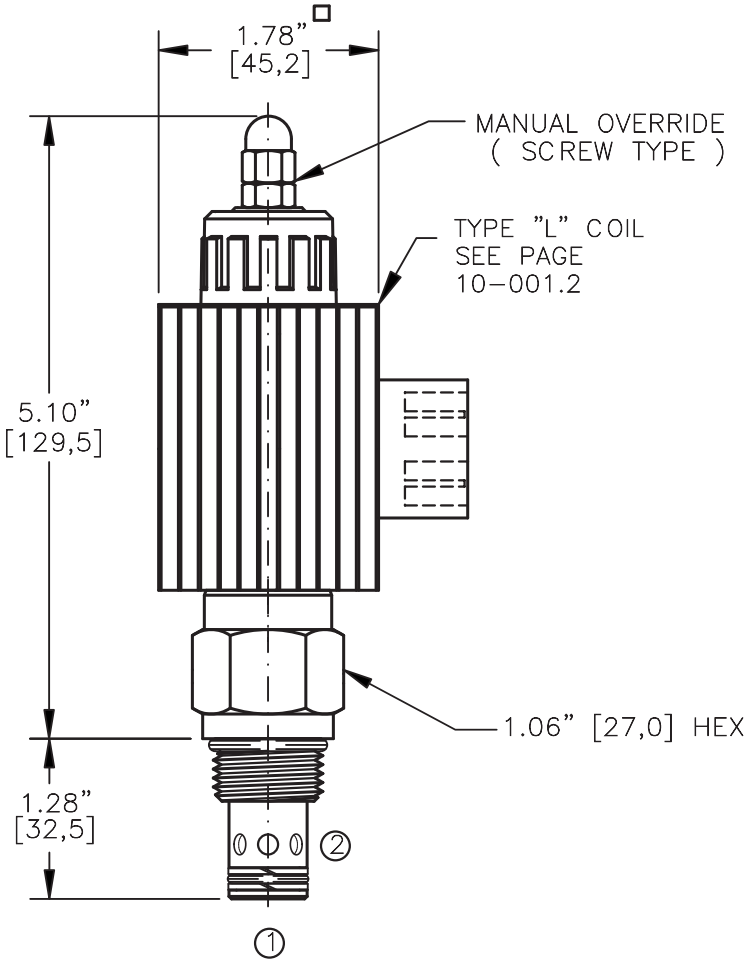

NOTES:
1. FOR ALUMINUM OR STEEL VALVE HOUSING CONFIGURATIONS SEE PAGE 0–012.1
2. SOLENOIDS AVAILABLE WITH DIODES – CONSULT FACTORY.

ERVP–10–X–XX–X–X–XXX X

BASIC

SIZE
10 = 7/8"–14UNF

SEALS
N = BUNA "N"
V = VITON

REGULATED PRESSURE
15 = 50 TO 1500 PSI
30 = 50 TO 3000 PSI
50 = 50 TO 5000 PSI

PORTS = CARTRIDGE ONLY
0 = G 1/4" BSPP
02BX = G 3/8" BSPP
06BX = SAE – #6
06TX = SAE – #8
08TX "A" = ALUM. HOUSING
"S" = STEEL HOUSING

ADJUSTMENT OPTIONS
M = MANUAL OVERRIDE

VOLTAGE AMPS
12D = 12 VDC 3.00
24D = 24 VDC 1.50

TERMINALS
L =18GA. 24" LEADS
T =SPADE TERM.
B =BOLT TERM.
G =DIN43650
W =WEATHER–PACK
D =DEUTSCH–DT04–2P
M =METRI–PACK CONN.

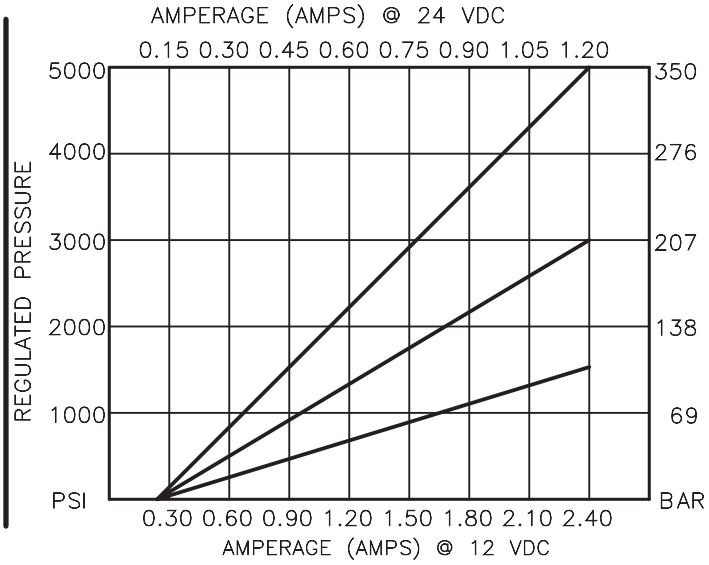

BUCHER hydraulics

WWW.SUMY.IR

ELECTRO–HYDRAULIC, PROPORTIONAL, PRESSURE RELIEF VALVE.

DESCRIPTION

This unit is a electro–hydraulic, proportional, screw in cartridge style, pilot operated, sliding spool type, high pressure relief valve.

OPERATIONS

When the coil is de–energized, this valve allows flow and pressure from port 1 to port 2 if pressure exceeds the spring bias (50 psi). When the coil is energized the armature moves a precision bias spring against the pilot orifice thus varying the pressure setting at port 1 proportional to the current input. When the current is increased to the coil the relief pressure will increase and when decreased it will decrease. IN THE EVENT OF POWER FAILURE THE VALVE RELIEF PRESSURE SETTING AT PORT 1 WILL BE THE SPRING BIAS.

FEATURES AND BENEFITS

Continuous–duty, very low heat rise & waterproof solenoid coil.
Pressure in tank port (2) will add to the bias spring setting, and is limited to 2000 PSI.
Interchangeable solenoid coils & terminations options available.
Hardened precision fitted spool & sleeve provides reliable, long life.
A unique self aligning (floating) cage provides very low hysteresis and reliable operation.
Very efficient wet – armature solenoid core tube construction.
All external carbon steel parts are plated for longer life against the elements.
All cartridge valves are 100% functionally tested.
Industry common cavity.

BUCHER hydraulics

WWW.SUMY.IR

ELECTRO–HYDRAULIC, PROPORTIONAL, PRESSURE RELIEF VALVE.

SPECIFICATIONS

OPERATING PRESSURE: 5000 PSI [350 Bar]
PROOF PRESSURE: 10,000 PSI [700 Bar]
REGULATED PRESSURE: 50 to 5000 PSI [3,5 to 345] See performance chart.
FLOW: 25.0 GPM [95,0 L/M] nominal.
INTERNAL PILOT FLOW: 60 cu.in/min [1,0 l/m] @ 3000 PSI [210 Bar]
VALVE HOUSINGS: 2500 PSI [175 Bar] = Aluminum – Anodized.
5000 PSI [350 Bar] = Steel – Unplated.
OPERATING TEMPERATURE: –40° to +250° F. [–40° to +120° C.]
OPERATING MEDIA: All general purpose hydraulic fluids such as MIL–H–5606, SAE–#10, SAE–#20, etc.
RESPONSE: The most efficient method to control this valve is with current control and a 50 Hz dither.
POWER REQUIREMENTS: 12 VDC, Operating current 0.2 to 2.4 AMPS.
24 VDC, Operating current 0.1 to 1.2 AMPS.
SEAL KIT: SKN–1022 Buna "N"
SKV–1022 Viton
INSTALLATION: No restrictions.
WEIGHT: 1.95 lb [.88 kg] cartridge with coil only.
VALVE CAVITY: #C1020, See Page 0–012.0.

info.el@bucherhydraulics.com

www.bucherhydraulics.com/commoncavity

© 2015 by Bucher Hydraulics, Inc., 2545 Northwest Parkway, Elgin, Illinois 60124, USA
All rights reserved.
The technical information in this catalog, may contain calculated figures (for reference only) and not actual performance data for this product. Data is provided for the purpose of product description only, and must not be construed as warranted characteristics in the legal sense. The information does not relieve users from the duty of conducting their own evaluations and tests. Because the products are subject to continual improvement, we reserve the right to amend the product specifications contained in this catalogue.

ERVP-12

BUCHER hydraulics

PROPORTIONAL PRESSURE RELIEF VALVE. PILOT OPERATED, SLIDING SPOOL TYPE.

WWW.SUMY.IR

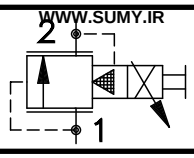

Pat.#5,546,980

TORQUE:
Steel = 70/75 Ft–Lb. [95/102 Nm]
Aluminum = 55/60 Ft–Lb. [74/81 Nm]

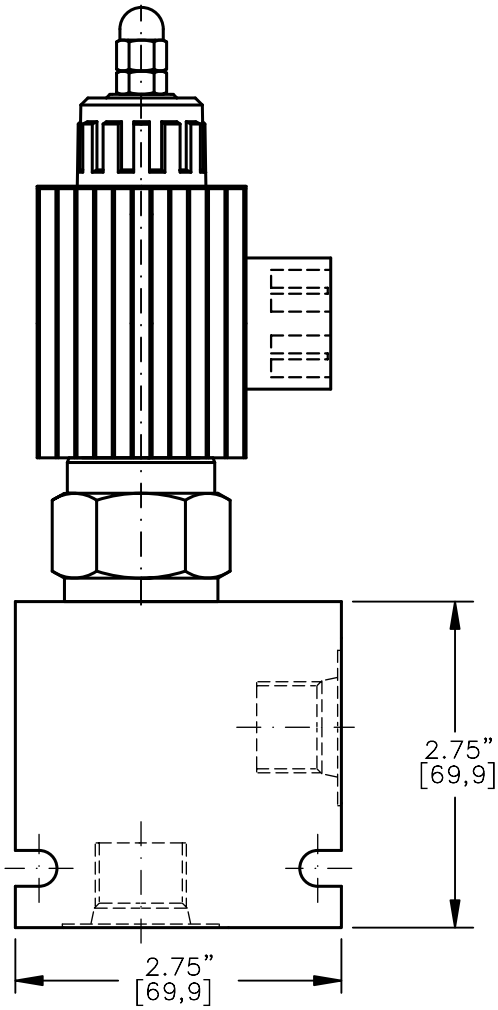

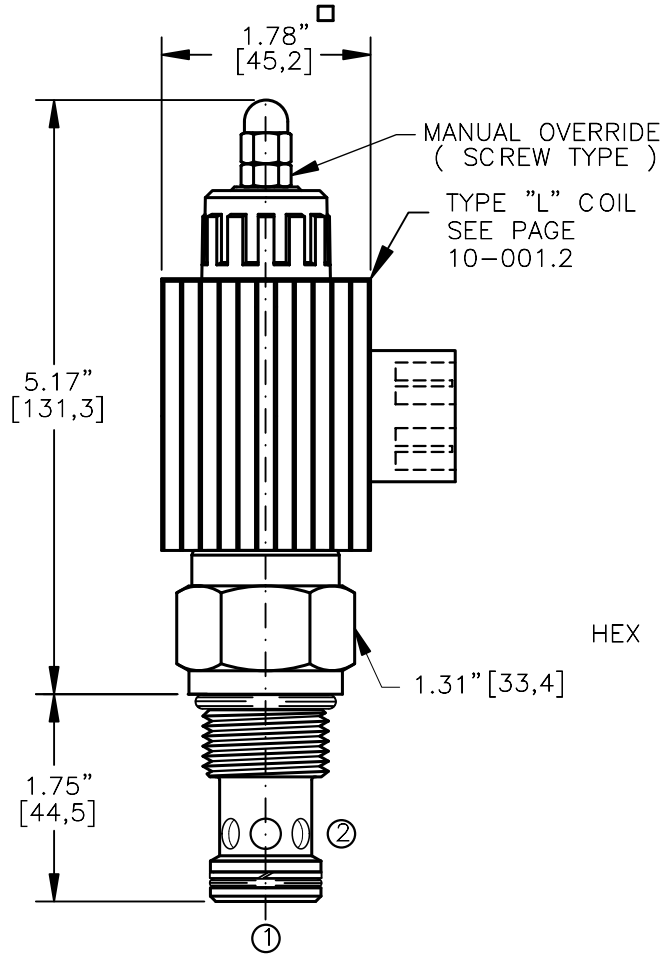

NOTES:
1. FOR ALUMINUM OR STEEL VALVE HOUSING CONFIGURATIONS SEE PAGE 0–013.1
2. SOLENOIDS AVAILABLE WITH DIODES – CONSULT FACTORY.

ERVP–12–X–XX–X–X–XXX X

BASIC

SIZE
12 = 1.062"–12UNF

SEALS
N = BUNA "N"
V = VITON

REGULATED PRESSURE
15 = 50 TO 1500 PSI
30 = 50 TO 3000 PSI
50 = 50 TO 5000 PSI

PORTS
0 = CARTRIDGE
4BX = G 1/2" BSPP
6BX = G 3/4" BSPP
10TX = SAE – #10
12TX = SAE – #12
"A" – ALUM. HOUSING
"S" – STEEL HOUSING

ADJUSTMENT OPTIONS
M = MANUAL OVERRIDE

VOLTAGE AMPS
12D = 12 VDC 3.00
24D = 24 VDC 1.50

TERMINALS
L =18GA. 24" LEADS
T =SPADE TERM.
B =BOLT TERM.
G =DIN43650
W =WEATHER–PACK
D =DEUTSCH–DT04–2P
M =METRI–PACK CONN.

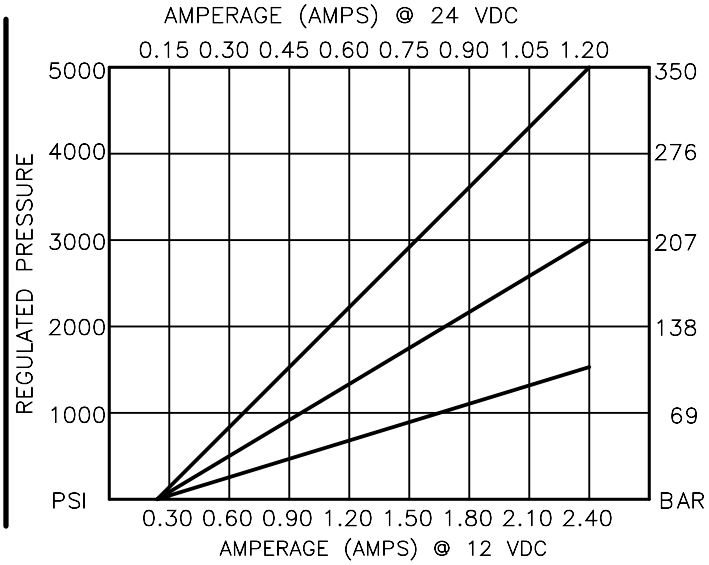

BUCHER hydraulics

WWW.SUMY.IR

ELECTRO–HYDRAULIC, PROPORTIONAL, PRESSURE RELIEF VALVE.

DESCRIPTION

This unit is a electro–hydraulic, proportional, screw in cartridge style, pilot operated, sliding spool type, high pressure relief valve.

OPERATIONS

When the coil is de–energized, this valve allows flow and pressure from port 1 to port 2 if pressure exceeds the spring bias (50 psi). When the coil is energized the armature moves a precision bias spring against the pilot orifice thus varying the pressure setting at port 1 proportional to the current input. When the current is increased to the coil the relief pressure will increase and when decreased it will decrease. IN THE EVENT OF POWER FAILURE THE VALVE RELIEF PRESSURE SETTING AT PORT 1 WILL BE THE SPRING BIAS.

FEATURES AND BENEFITS

Continuous–duty, very low heat rise & waterproof solenoid coil.
Pressure in tank port (2) will add to the bias spring setting, and is limited to 2000 PSI.
Interchangeable solenoid coils & terminations options available.
Hardened precision fitted spool & sleeve provides reliable, long life.
A unique self aligning (floating) cage provides very low hysteresis and reliable operation.
Very efficient wet – armature solenoid core tube construction.
All external carbon steel parts are plated for longer life against the elements.
All cartridge valves are 100% functionally tested.

BUCHER hydraulics

WWW.SUMY.IR

ELECTRO–HYDRAULIC, PROPORTIONAL, PRESSURE RELIEF VALVE.

SPECIFICATIONS

OPERATING PRESSURE: 5000 PSI [350 Bar]
PROOF PRESSURE: 10,000 PSI [700 Bar]
REGULATED PRESSURE: 50 to 5000 PSI [3,5 to 345] See performance chart.
FLOW: 60.0 GPM [227,0 L/M] nominal.
INTERNAL PILOT FLOW: 60 cu.in/min [1,0 l/m] @ 3000 PSI [210 Bar]
VALVE HOUSINGS: 2500 PSI [175 Bar] = Aluminum – Anodized.
5000 PSI [350 Bar] = Steel – Unplated.
OPERATING TEMPERATURE: –40° to +250° F. [–40° to +120° C.]
OPERATING MEDIA: All general purpose hydraulic fluids such as MIL–H–5606, SAE–#10, SAE–#20, etc.
RESPONSE: The most efficient method to control this valve is with current control and a 50 Hz dither.
POWER REQUIREMENTS: 12 VDC, Operating current 0.2 to 2.4 AMPS.
24 VDC, Operating current 0.1 to 1.2 AMPS.
SEAL KIT: SKN–1222 Buna "N"
SKV–1222 Viton
INSTALLATION: No restrictions.
WEIGHT: 2.25 lb [1,12 kg] cartridge with coil only.
VALVE CAVITY: #C1220, See Page 0–013.0.

info.el@bucherhydraulics.com

www.bucherhydraulics.com/commoncavity

© 2015 by Bucher Hydraulics, Inc., 2545 Northwest Parkway, Elgin, Illinois 60124, USA
All rights reserved.
The technical information in this catalog, may contain calculated figures (for reference only) and not actual performance data for this product. Data is provided for the purpose of product description only, and must not be construed as warranted characteristics in the legal sense. The information does not relieve users from the duty of conducting their own evaluations and tests. Because the products are subject to continual improvement, we reserve the right to amend the product specifications contained in this catalogue.

BUCHER hydraulics

CROSS PORT RELIEF VALVE, DIRECT ACTING DIFFERENTIAL AREA, POPPET TYPE

WWW.SUMY.IR

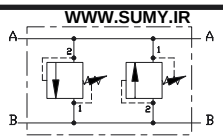

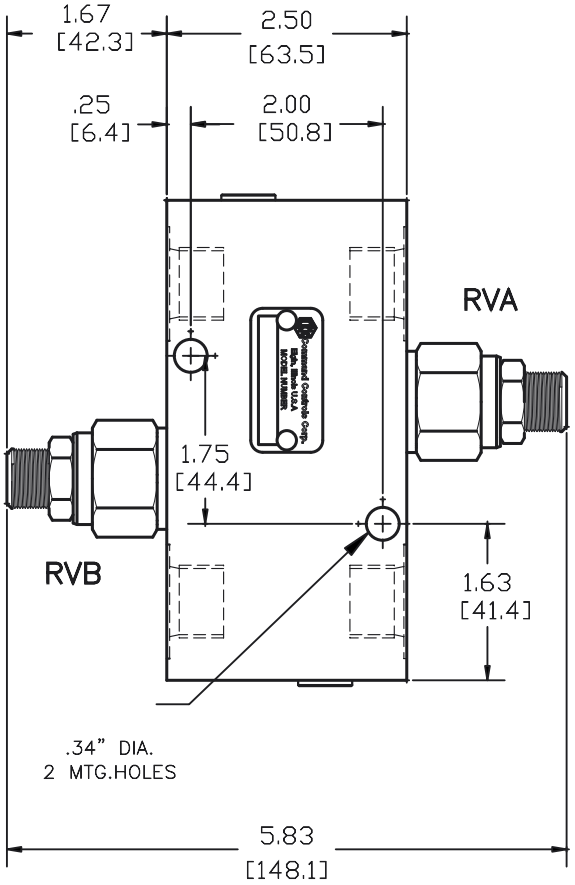

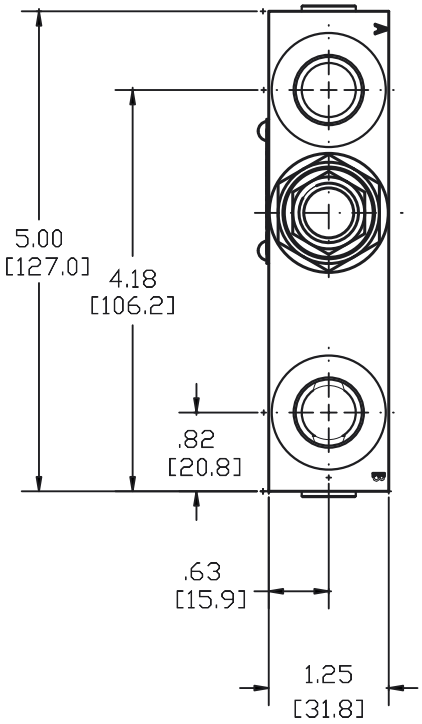

CPRV–10–X–X–0–XX–XX/XXX/XXX

RVA RVB RVA RVB

BASIC

SIZE
10 = 7/8"–14 UNF

SEALS
N = BUNA "N"
V = VITON

ADJUSTMENT
S = ADJUSTING SCREW
C = CAPPED
T = TAMPERPROOF
K = HANDKNOB
M = METAL HANDKNOB

PORTS
08TX = SAE – #8
"A" – ALUM. HOUSING
"S" – STEEL HOUSING

PRESSURE RANGE
15 = 100 TO 1500 PSI
30 = 300 TO 3000 PSI
50 = 500 TO 5000 PSI

OPTIONAL PRESSURE SETTING
(PRESSURE/100)
Ex.: 42.5 = 4250 PSI

FOR ADJUSTMENT CONTROL OPTIONS SEE PAGE 0–050.0

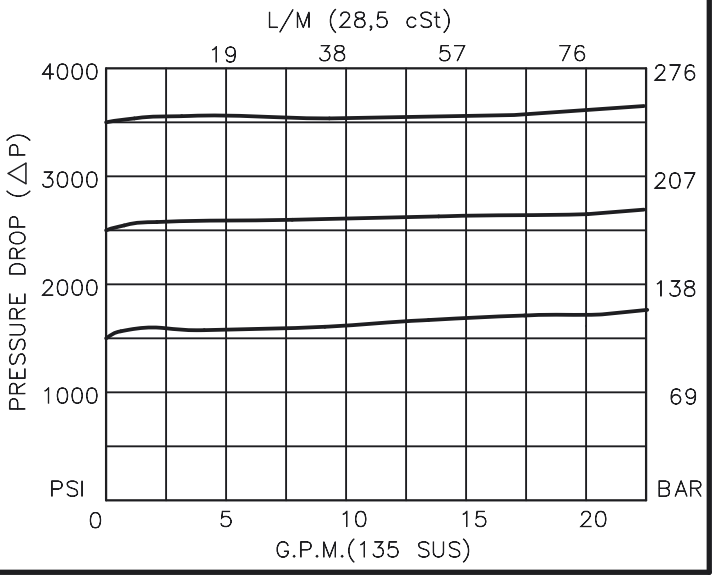

BUCHER hydraulics

WWW.SUMY.IR

CROSS PORT RELIEF VALVE, DIRECT ACTING, POPPET TYPE

DESCRIPTION

This unit consists of two RVDA cartridges in an inline housing. The cartridges are differential area, poppet type, bi-directional, adjustable, hydraulic pressure relief valves.

OPERATIONS

This manifold (CPRV) allows flow with minimal pressure drop through normally separated A and B thru ports. If pressure in either port exceeds its valve setting, flow will cross over to the other port.

FEATURES AND BENEFITS

Leakproof screw adjustment.
Adjustment screw can not be backed out of valve.
Overset protection – spring can not go solid.
Hardened precision fitted poppet & cage provides reliable, long life.
All external carbon steel parts are plated for longer life against the elements.
Valve is available with screw, tamperproof, capped and handknob adjustments.
All cartridge valves are 100% functionally tested.
Industry common cavity.

SPECIFICATIONS

OPERATING PRESSURE: 5,000 PSI [350 Bar]
PROOF PRESSURE: 10,000 PSI [700 Bar]
FLOW: 20.0 GPM [76 L/M] nominal. See performance chart.
INTERNAL LEAKAGE: 5 drops/min [.25 cc/m] @ 85% of crack pressure.
DEFINITION OF CRACK: evident at 0.06 GPM [0.25 LPM]
VALVE HOUSINGS: 2500 PSI [175 Bar] = Aluminum – Anodized.
5000 PSI [350 Bar] = Steel – Unplated.
OPERATING TEMPERATURE: –40° to +250° F. [–40° to +120° C.]
OPERATING MEDIA: All general purpose hydraulic fluids such as MIL–H–5606, SAE–#10, SAE–#20, etc.
INSTALLATION: No restriction.
FILTRATION: 25 microns or better.
SEAL KIT NUMBER: SKN–1021 for Buna "N".
SKV–1021 for Viton.
WEIGHT: 2.65 lbs [1,21 kg] Aluminum. 5.25 lbs [2,38 kg] Steel.
VALVE CAVITY: #C1020, See Page 0–012.0.

NOTE: A 100 PSI pressure differential must be present between the two relief valve settings. If same setting is needed, use RVBD–10 cartridge.

info.el@bucherhydraulics.com www.bucherhydraulics.com/commoncavity

© 2015 by Bucher Hydraulics, Inc., 2545 Northwest Parkway, Elgin, Illinois 60124, USA
All rights reserved.
Data is provided for the purpose of product description only, and must not be construed as warranted characteristics in the legal sense. The information does not relieve users from the duty of conducting their own evaluations and tests. Because the products are subject to continual improvement, we reserve the right to amend the product specifications contained in this catalogue.

BUCHER hydraulics
WWW.SUMY.IR

General information
Cavity

Type series: AGS

Dimensions and sectional view

Beispiel für die Masseinheit:
Example for the dimensional units:
0.79 = 0.79 mm millimeter

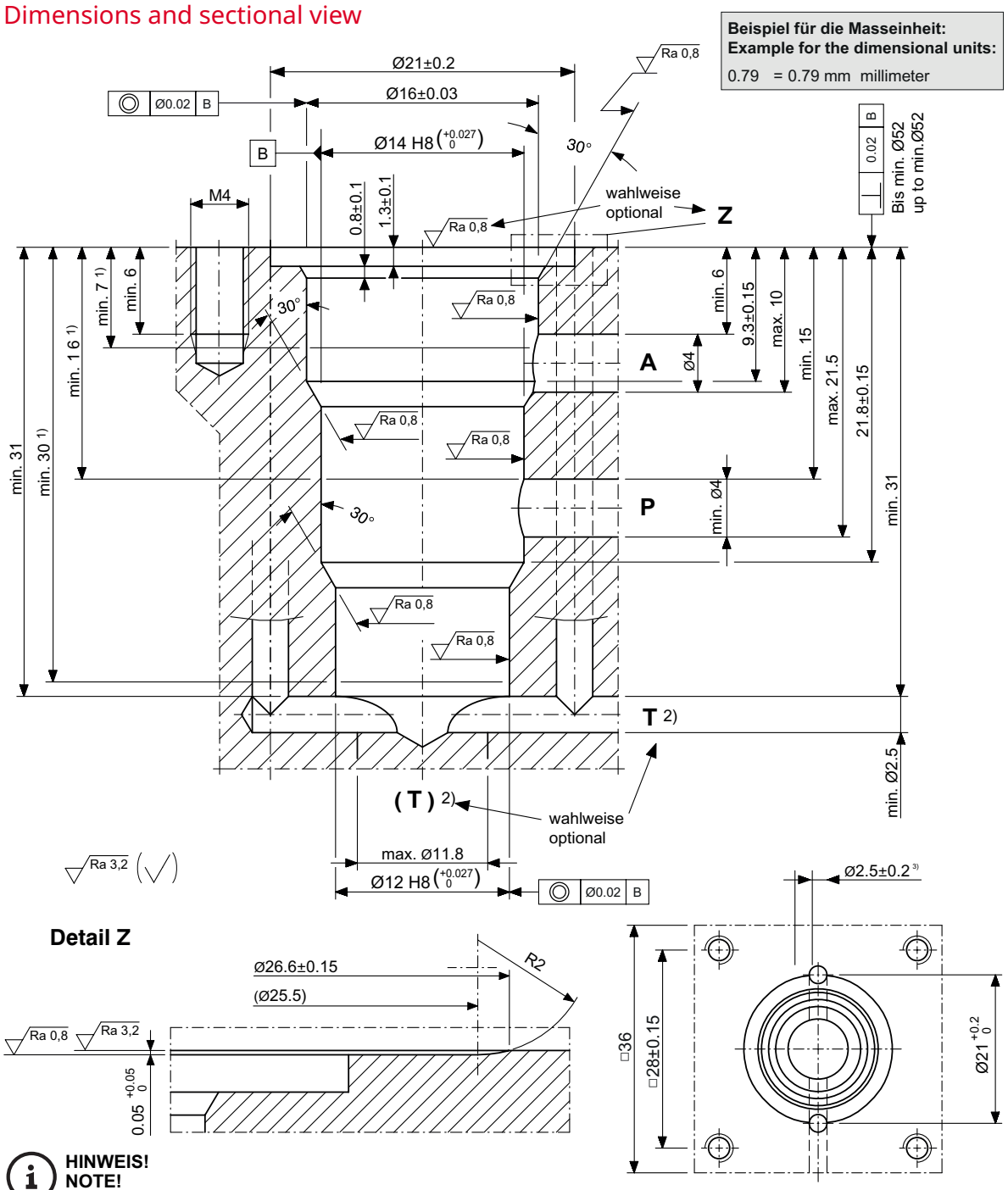

HINWEIS!
NOTE!

1) Passungstiefe / Minimum depth of specified diametral tolerance
2) Bei Verwendung des axialen Anschlusses (T), ist der radiale Anschluss T zu verschliessen
If using the axial port (T) option, plug the radial port T
3) 2 Bohrungen beliebig auf Teilkreis Ø21 Achtung: Darf die Bohrungen P und A nicht tangieren
2 opposing holes at any convenient position on a Ø21 PCD. Note: they must not affect the P and A drillings

Installation information

ATTENTION!
You must maintain the specified positional and diametral tolerances. To ensure trouble-free operation of the screw-in cartridges, we strongly recommend that pilot drilling, boring, reaming and cavity thread-cutting are always performed in one setup.

NOTE!
Cavity type to factory standard.

IMPORTANT!
To ensure proper sealing, machine either the seal depression as per Detail Z, or the top surface Ra 0,8 to a minimum Ø52. In the case of the Bucher stepped reamer, the seal depression is incorporated in the tool.

NOTE!
We offer form tool sets for sale or hire. For further information, see data sheet 400-P-040011.

info.ch@bucherhydraulics.com **www.bucherhydraulics.com**

© 2023 by Bucher Hydraulics AG Frutigen, 3714 Frutigen, Switzerland

All rights reserved.
Data is provided for the purpose of product description only, and must not be construed as warranted characteristics in the legal sense. The information does not relieve users from the duty of conducting their own evaluations and tests. Because the products are subject to continual improvement, we reserve the right to amend the product specifications contained in this catalogue.

BUCHER hydraulics

WWW.SUMY.IR

Pressure valve
Reducing function

Q_{max} = 10 l/min, p_{max} = 210 bar
Direct acting, spool type, proportional solenoid
Type series: DDRRZ-7-_-4...

- Slip-in cartridge valve for cavity AGS
- All external parts with zinc-nickel plating according to DIN EN ISO 19598
- Installation in threaded port body type GAAZ
- Excellent stability over the whole pressure and flow range
- Operated by a proportional solenoid
- High pressure wet-armature solenoids
- Various plug-connector systems and voltages are available

Symbol

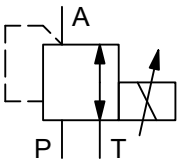

Description

Series DDRRZ-7_... proportional 3-way pressure-reducing valves are direct acting, spool-type, push-in cartridges and are size 4. They reduce the outlet pressure in A as a function of the control current signal and independently of the inlet pressure in P. In the initial position (solenoid de-energized) the inlet of the 3-way pressure-reducing cartridge is shut off and the outlet is connected to tank (port A to T). In control mode, the connection P to A opens until the pressure in port A reaches the preset level. If the pressure rises above the preset level, the control spool opens the A to T connection until balance is attained. Two pressure ranges are available. To accommodate a maximum operating pressure (inlet pressure) of pmax 210 bar, the “H” model must be used. With other models the maximum operating pressure is dependent on the pressure range. They are suitable for controlling larger directional valves, where they can be incorporated in the valve

body or directly in the end covers, for example, and for controlling pumps and motors. All external parts of the valves are zinc-nickel plated and are thus suitable for use in the harshest operating environments. These valves are predominantly used for reducing a system pressure in mobile and industrial applications. For self-assembly, please refer to the section related data sheets.

Technical data

General characteristics	Description, value, unit
Function group	pressure valve
Function	reducing function
Design	slip-in cartridge valve
Controls	proportional solenoid
Characteristic	direct acting, spool type
MTTFd value	150 years
Construction size	NG 04
Mounting attitude	unrestricted (preferably vertical, coil down)
Weight	0.55 kg
Cavity acc. factory standard	AGS
Tightening torque steel	2.6 Nm
Tightening torque aluminium	2.6 Nm
Tightening torque tolerance	± 10 %
Minimum ambient temperature	- 30 °C
Maximum ambient temperature	+ 50 °C
Surface protection	all external parts with zinc-nickel plating according to DIN EN ISO 19598
Seal kit order number	NBR: DS-250-N / FKM: DS-250-V

Hydraulic characteristics	Description, value, unit
Maximum operating pressure	210 bar
Restriction of the operating pressure	model "H" 210 bar, both pressure ranges
Maximum flow rate	10 l/min
Control flow range	8 l/min
Flow direction	see symbol
Hydraulic fluid	HL and HLP mineral oil according to DIN 51 524; other fluids on request!
Minimum fluid temperature	- 30 °C
Maximum fluid temperature	+ 70 °C
Viscosity range	15 ... 380 mm^2/s (cSt)
Recommended viscosity range	20 ... 130 mm^2/s (cSt)
Minimum fluid cleanliness (cleanliness class according to ISO 4406:1999)	class 18/16/13
Nominal pressure range	nominal pressure range 080: ...80 bar nominal pressure range 110: ...110 bar

Electric characteristics	Description, value, unit
Supply voltage DC	12 V DC 24 V DC
Control current	12 V = 0...1400 mA 24 V = 0...800 mA
Nominal power consumption	max. 19 W
Relative duty cycle	100 %
Coil resistance R	cold value at 20 °C = 12 V = 6.4 Ω / 24 V = 17.2 Ω cold value at -25 °C = 12 V = 5.2 Ω / 24 V = 14.1 Ω max. warm value = 12 V = 10.0 Ω / 24 V = 27.0 Ω
Recommended PWM frequency	160 Hz
Response sensitivity with PWM	< 1 % I_{max}
Reproducibility with PWM	< 2 % Q_{nenn}
Hysteresis with PWM	2...4 % I_{max}
Reversal error with PWM	2...4 % I_{max}
Electrical connection coil	DIN EN 175301-803, 3-pole 2 P+E (IP 65)
Protection class solenoid coil to ISO 20 653 / EN 60 529	IP 65 / IP 67 / IP 69K, see Ordering code (with appropriate mating connector and proper fitting and sealing)

Performance graphs

measured with oil viscosity 33.0 mm²/s (cSt)

p = f (I) Pressure adjustment

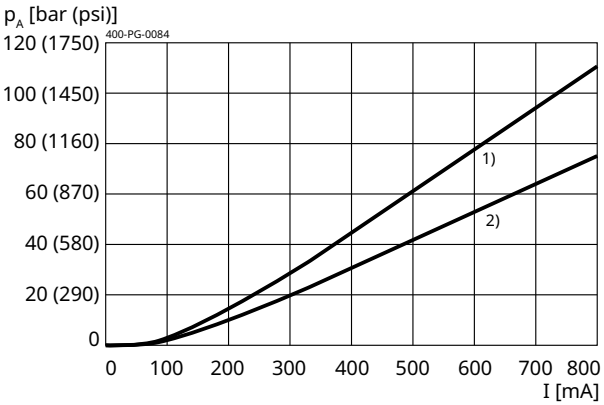

1) p_N 110 bar (1600 psi)
2) p_N 80 bar (1160 psi)

p = f (I) Pressure adjustment

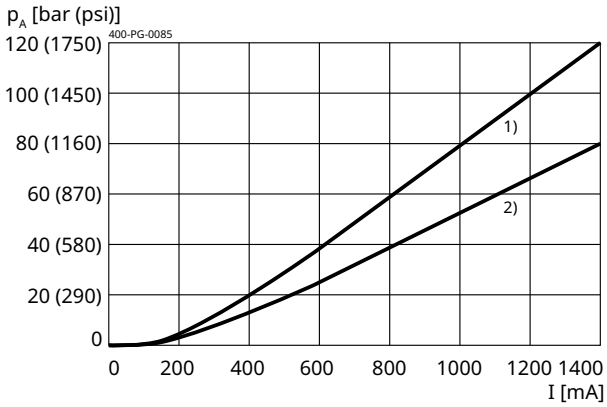

1) p_N 110 bar (1600 psi)
2) p_N 80 bar (1160 psi)

p = f (Q) Pressure-flow rate

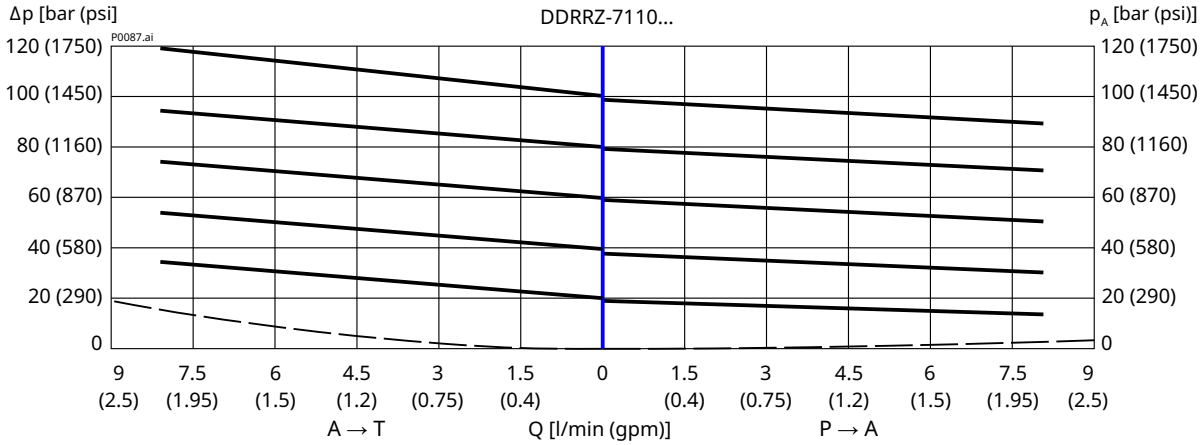

p = f (Q) Pressure-flow rate

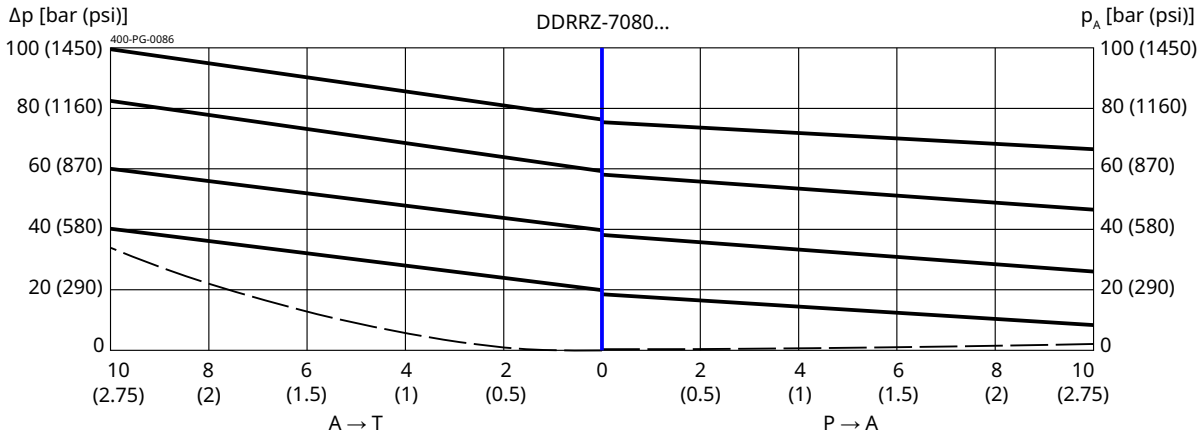

Installation

Beispiel für die Masseinheit:
Example for the dimensional units:

0.79 = 0.79 mm millimeter
(.031) = 0.031'' inch

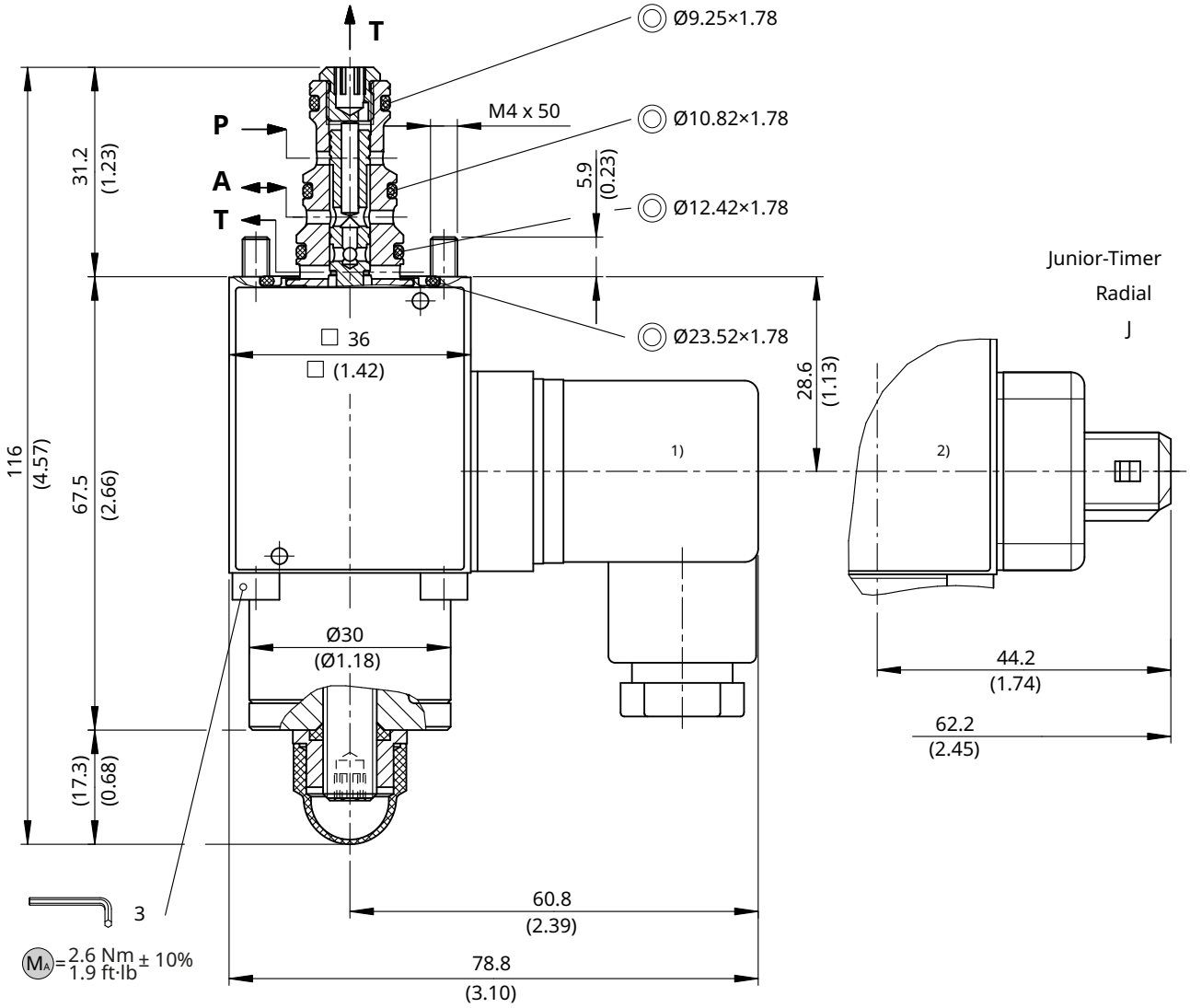

[1] Gegenstecker nach ISO 4400 / DIN 43 650 / ISO 4400 / DIN 43 650 mating plug connection
[2] Junior-Timer-Radialstecker-Anschluss / Junior Timer Radial plug connection

NOTE!

- Observe tightening torque M_A.
- Mount the valve preferably suspended (automatic air bleed).
- The valve is factory-set, no further adjustments are necessary.

ATTENTION!

Only qualified personnel with mechanical skills may carry out the following work:

- installation and, if necessary, adjustment.
- inspection and, if necessary, replacement of the seals shown in the illustration. New seals must only be installed after being oiled or greased (seal kit; see "Technical Data").

Ordering code

Ex. DDR R Z - 7 080 - 4 - _ _ - 2 24 D _

DDR	=	pressure-reducing cartridge, direct acting
R	=	electrically operated, ☐36, proportional solenoid
A ...Q	=	standard model according to valid data sheet
Y ... R	=	special model (on request)
7	=	3-way pressure-reducing
080	=	pressure range ... 80 bar
110	=	pressure range ... 110 bar
4	=	nominal size 4
(blank)	=	NBR (nitril-butadien-rubber / BUNA) seals **(standard)**
V	=	FKM (fluorocarbon rubber / VITON) seals (special seals on request)
(blank)	=	armature without orifice **(standard)**
H	=	armature with orifice(for higher inlet pressure, p_{max} 210 bar)
1...9	=	technical design no. (omit by ordering)
...	=	voltage e.g. 24 (24 V)
D	=	current DC

(blank)	=	DIN EN 175301-803 connection	3-pole 2 P+E **(standard)**	(IP 65)	with mating plug
M100	=	DIN EN 175301-803 connection	3-pole 2 P+E	(IP 65)	mating plug not supplied
J	=	Junior Timer plug connection	2-pole radial	(IP 65)	mating plug not supplied
D	=	Deutsch plug connection DT04-2P	2-pole 45°	(IP 67/69K)	mating plug not supplied
		other plug-variants, please consult BUCHER.			

IMPORTANT!
Not every combination of voltage values, current type and plug connections vailable.

Related data sheets

Reference	Description
400-P-040011	form tools
400-P-010101	MTTFd Values for Hydraulic Valves
400-P-040151	cavity AGS
400-P-712105	threaded port body GAAZ

info.ch@bucherhydraulics.com **www.bucherhydraulics.com**

© 2026 by Bucher Hydraulics AG Frutigen, 3714 Frutigen, Switzerland

All rights reserved.
Data is provided for the purpose of product description only, and must not be construed as warranted characteristics in the legal sense. The information does not relieve users from the duty of conducting their own evaluations and tests. Because the products are subject to continual improvement, we reserve the right to amend the product specifications contained in this catalogue.

BUCHER
hydraulics
WWW.SUMY.IR

General information
Cavity

Type series: AG

Dimensions and sectional view

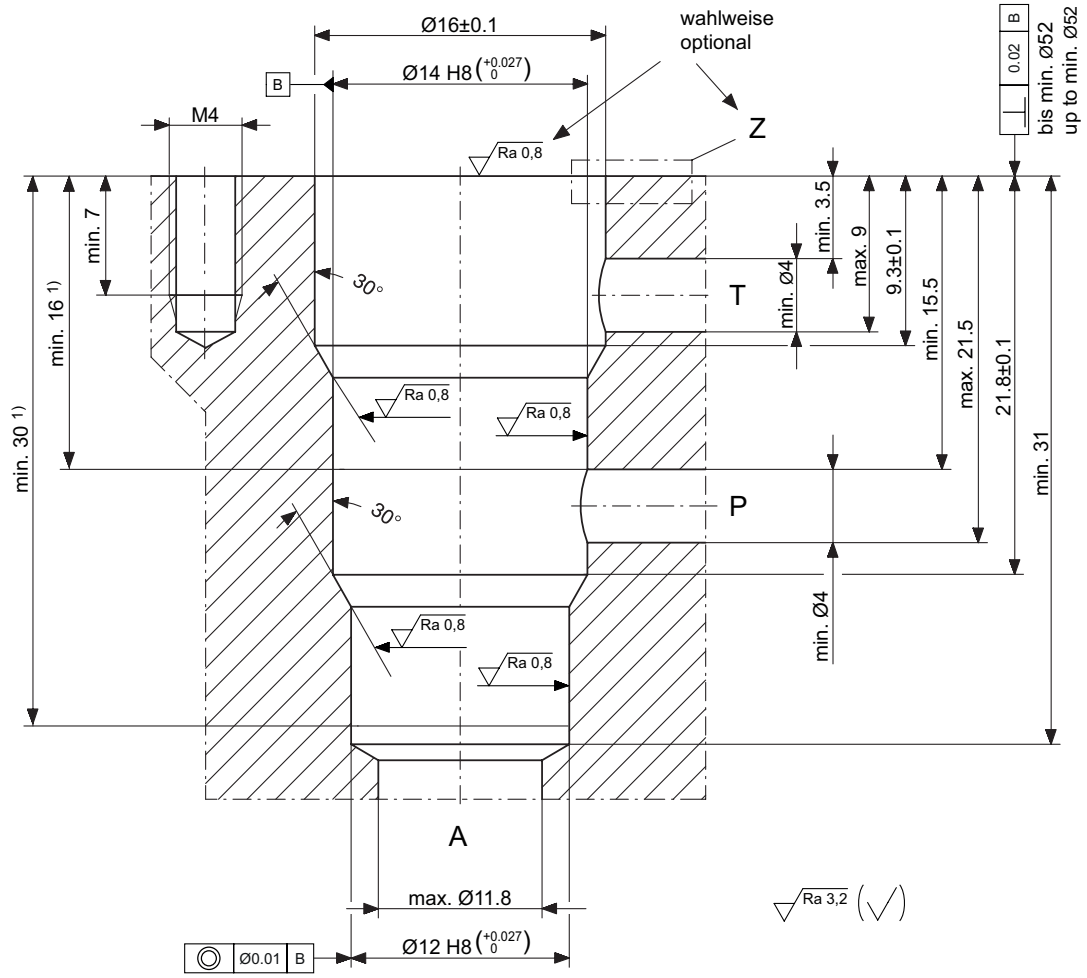

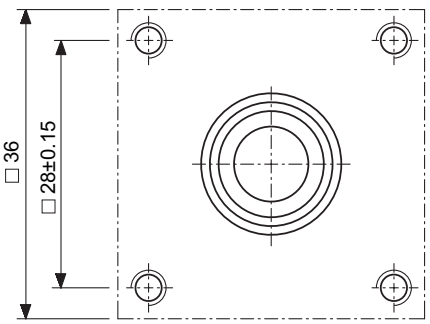

Detail Z

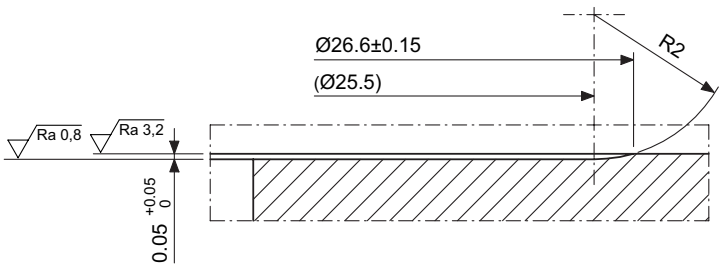

HINWEIS!
NOTE!

1) Passungstiefe
Minimum depth of specified diametral tolerance

Beispiel für die Masseinheit:
Example for the dimensional units:
0.79 = 0.79 mm millimeter

Installation information

ATTENTION!
You must maintain the specified positional and diametral tolerances. To ensure trouble-free operation of the screw-in cartridges, we strongly recommend that pilot drilling, boring, reaming and cavity thread-cutting are always performed in one setup.

NOTE!
We offer form tool sets for sale or hire. For further information, see data sheet 400-P-040011.

NOTE!
Cavity type to factory standard.

info.ch@bucherhydraulics.com **www.bucherhydraulics.com**

© 2023 by Bucher Hydraulics AG Frutigen, 3714 Frutigen, Switzerland

All rights reserved.
Data is provided for the purpose of product description only, and must not be construed as warranted characteristics in the legal sense. The information does not relieve users from the duty of conducting their own evaluations and tests. Because the products are subject to continual improvement, we reserve the right to amend the product specifications contained in this catalogue.

BUCHER hydraulics

WWW.SUMY.IR

Pressure valve
Reducing function

Q_{max} = 12 l/min, p_{max} = 100 bar
Direct acting, spool type, proportional solenoid
Type series: DRDRA-7GG-4-...

- Slip-in cartridge valve for cavity AG
- All external parts with zinc-nickel plating according to DIN EN ISO 19598
- Installation in threaded port body type GAAA
- Nominal pressure when solenoid de-energized (fail-safe function)
- Excellent stability over the whole pressure and flow range
- High pressure wet-armature solenoids
- Various plug-connector systems and voltages are available

Symbol

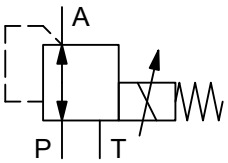

Description

The proportional pressure-reducing valves, series DRDRA-7GG... , are size 2...4, pilot-operated, high performance slip-in cartridge valve. They are designed on the proven sliding-spool principle. These cartridges reduce the output pressure in proportion to the control flow, regardless of the input pressure. The required secondary pressure is controlled to the value set independently of the inlet pressure. If the specified pressure is exceeded, connection opens to restore the balance. To obtain a reliable pressure setting over the entire pressure range, the overall pressure range is divided into different pressure levels. These valves are mainly used in certain mobile and industrial applications to reduce the system pressure. The pressure is set by means of an adjusting spindle. All external parts of the screw-in valves are zinc-nickel plated and are thus suitable for use in the harshest operating environments. For installation and further information, please refer to the section related data sheets.

Technical data

General characteristics	Description, value, unit
Function group	pressure valve
Function	reducing function
Design	slip-in cartridge valve
Controls	proportional solenoid
Characteristic	direct acting, spool type
MTTFd value	150 years
Construction size	NG 04
Mounting attitude	unrestricted (preferably vertical, coil down)
Weight	0.65 kg
Cavity acc. factory standard	AG
Tightening torque steel	4.5 Nm
Tightening torque aluminium	4.5 Nm
Tightening torque tolerance	± 10 %
Minimum ambient temperature	- 30 °C
Maximum ambient temperature	+ 50 °C
Surface protection	all external parts with zinc-nickel plating according to DIN EN ISO 19598
Seal kit order number	NBR: DS-453-N / FKM: DS-453-V

Hydraulic characteristics	Description, value, unit
Maximum operating pressure	100 bar
Restriction of the operating pressure	30...50 bar
Maximum flow rate	12 l/min
Flow direction	see symbol
Hydraulic fluid	mineral-based or synthetics with lubricating properties. HL and HLP mineral oil according to DIN 51 524; other fluids on request!
Minimum fluid temperature	- 30 °C
Maximum fluid temperature	+ 70 °C
Viscosity range	15 ... 380 mm^2/s (cSt)
Recommended viscosity range	20 ... 130 mm^2/s (cSt)
Minimum fluid cleanliness (cleanliness class according to ISO 4406:1999)	class 18/16/13
Nominal pressure range	Pressure range 04 = ...40 bar Pressure range 03 = ...30 bar Pressure range 02 = ...20 bar

Electric characteristics	Description, value, unit
Actuator type	solenoid coil
Supply voltage DC	12 V DC 24 V DC
Control current	12 V = 0...1400 mA 24 V = 0...800 mA
Nominal power consumption	Max. 19 W
Relative duty cycle	100 %
Coil resistance R	cold value at 20°C 12 V = 6.4 Ω 24 V = 17.2 Ω cold value at -25°C 12 V = 5.2 Ω 24 V = 14.1Ω max. warm value 12 V = 10.0 Ω 24 V = 27.0 Ω
Recommended PWM frequency	200 Hz
Response sensitivity with PWM	< 1 % I_{max}
Reproducibility with PWM	< 2 % Q_{nenn}
Hysteresis with PWM	2...4 % I_{max}
Reversal error with PWM	2...4 % I_{max}
Electrical connection coil	DIN EN 175301-803, 3-pole 2 P+E (IP 65)
Protection class solenoid coil to ISO 20 653 / EN 60 529	IP 65 / IP 67 / IP 69K, see Ordering code (with appropriate mating connector and proper fitting and sealing)

Performance graphs

measured with oil viscosity 33.0 mm²/s (cSt)

p = f (I) Pressure adjustment

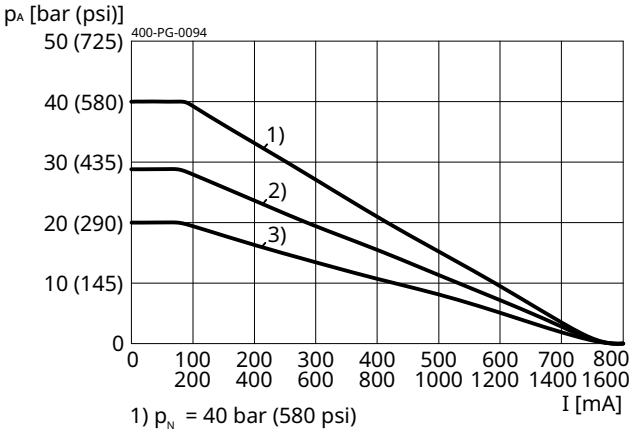

1) p_N = 40 bar (580 psi)
2) p_N = 30 bar (435 psi)
3) p_N = 20 bar (290 psi)

p = f (Q) Pressure-flow rate

NG04

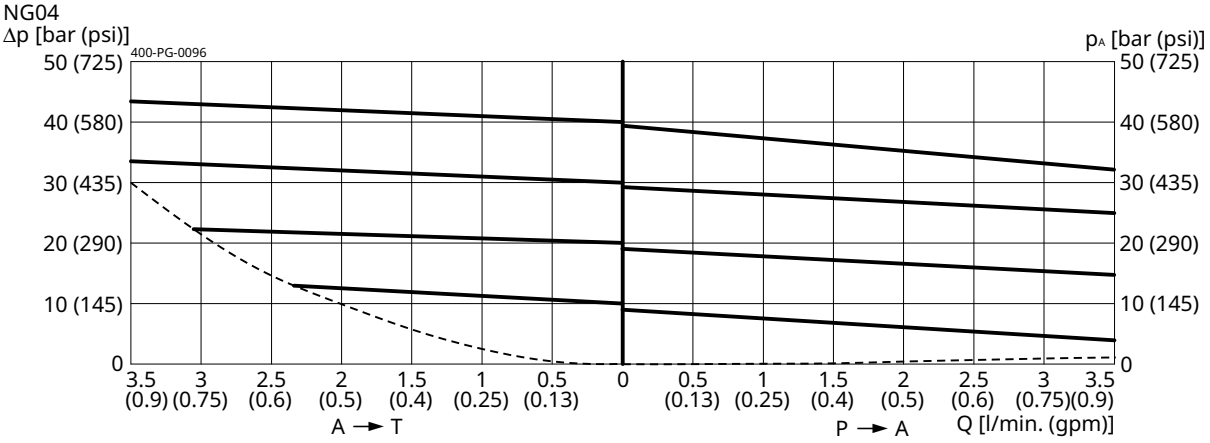

p = f (Q) Pressure-flow rate

NG03

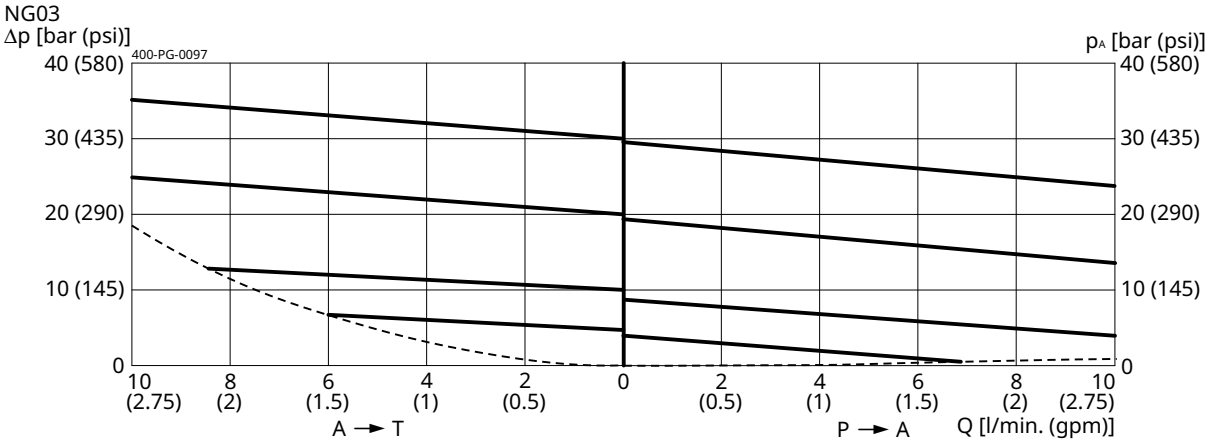

p = f (Q) Pressure-flow rate

NG02

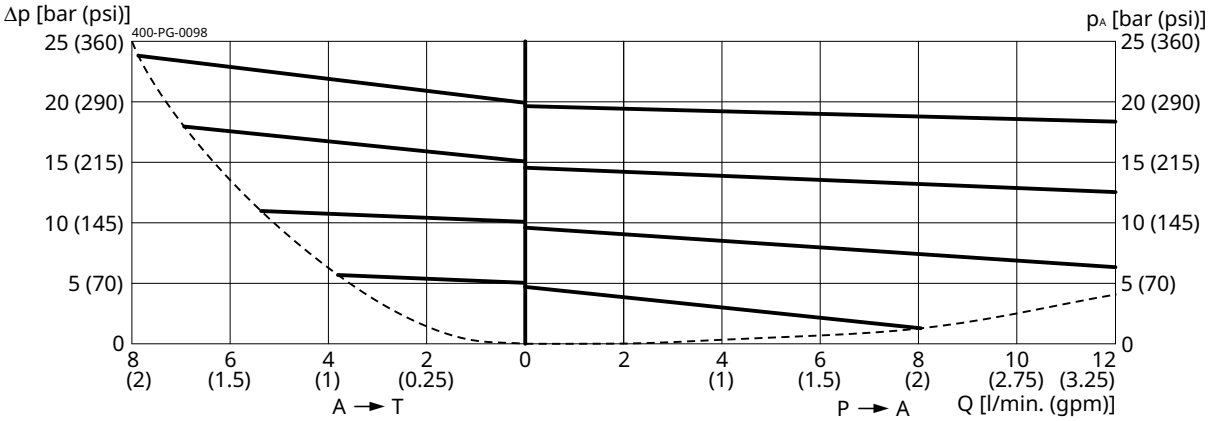

Installation

Beispiel für die Masseinheit:
Exampel for the dimensional units:

0.79	= 0.79 mm	millimeter
(.031)	= 0.031"	inch

DIN EN 175201-803

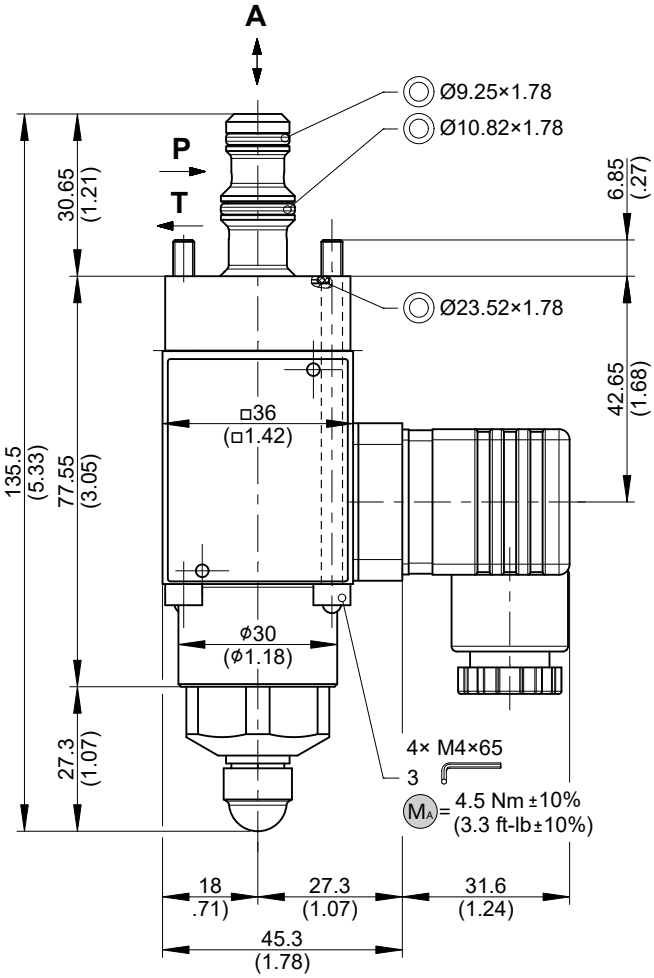

Deutsch DT04-2P

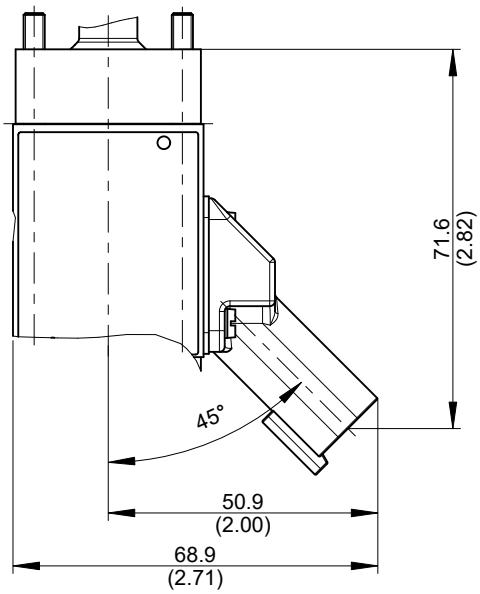

Junior-Timer

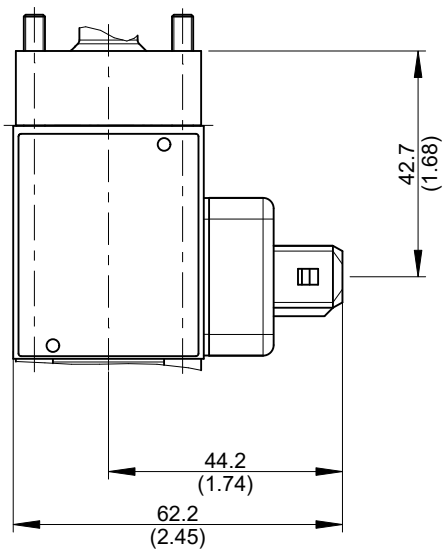

NOTE!

- Observe tightening torque MA .
- Mount the valve preferably suspended (automatic air bleed).
- The valve is factory-set, no further adjustments are necessary.

ATTENTION!

Only qualified personnel with mechanical skills may carry out the following work:

- installation and, if necessary, adjustment.
- inspection and, if necessary, replacement of the seals shown in the illustration. New seals must only be installed after being oiled or greased (seal kit; see "Technical Data").

Ordering code

Ex. DR D R A - 7 G G - 02 - 4 - _ _ - 2 - 24 D _

DR	=	pressure reducing cartridge
D	=	direct acting
R	=	electrically operated, 36mm, prop. solenoid
A ... Q	=	standard model according to valid data sheet
Z ... R	=	special model (on request)
7	=	pressure-reducing with full-flow pressure relief
G	=	cavity type AG
G	=	proportional solenoid, inverse type (pulling)
04	=	pressure range ...40 bar / ...580 psi
03	=	pressure range ...30 bar / ...435 psi
02	=	pressure range ...20 bar / ...290 psi
2	=	nominal size 2 (pressure range 04)
3	=	nominal size 3 (pressure range 03)
4	=	nominal size 4 (pressure range 02)
(blank)	=	NBR (nitril-butadien-rubber / BUNA) seals **(standard)**
V	=	FKM (fluorocarbon rubber / VITON) seals (special seals on request)
(blank)	=	armature without orifice **(standard)**
H	=	armature with orifice (for higher inlet pressure, pmax 100 bar)
1 ... 9	=	technical design no. (omit by ordering)
...	=	voltage e.g. 24 (24 V)
D	=	current DC

(blank)	=	DIN EN 175301-803 connection	3-pole 2 P+E **(standard)**	(IP 65)	
M100	=	DIN EN 175301-803 connection	3-pole 2 P+E	(IP 65)	mating plug not supplied
D	=	Deutsch plug connection DT04-2P	2-pole 45°	(IP 67/69K)	
J	=	Junior Timer plug connection	2-pole radial	(IP 65)	
		other plug-variants, please consult BUCHER.			

IMPORTANT!
Not every combination of voltage values and plug connections available.

Related data sheets

Reference	Description
400-P-040011	form tools
400-P-040141	cavity AG
400-P-712101	threaded port body GAAA
400-P-010101	MTTFd Values for Hydraulic Valves

info.ch@bucherhydraulics.com **www.bucherhydraulics.com**

© 2026 by Bucher Hydraulics AG Frutigen, 3714 Frutigen, Switzerland

All rights reserved.
Data is provided for the purpose of product description only, and must not be construed as warranted characteristics in the legal sense. The information does not relieve users from the duty of conducting their own evaluations and tests. Because the products are subject to continual improvement, we reserve the right to amend the product specifications contained in this catalogue.

BUCHER hydraulics

WWW.SUMY.IR

Pressure valve
Reducing function

Q_{max} = 15 l/min, p_{max} = 250 bar
Direct acting, spool type, proportional solenoid
Type series: DRDTA-7MQ-_-5...

- Screw-in cartridge valve for cavity AM
- All external parts with zinc-nickel plating according to DIN EN ISO 19598
- Installation in threaded port body type GAMA
- Excellent stability over the whole pressure and flow range
- The slip-on coil can be rotated, and it can be replaced without opening the hydraulic envelope
- Various plug-connector systems and voltages are available
- High pressure wet-armature solenoids

Symbol

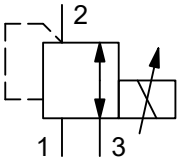

Description

The proportional pressure-reducing valves, series DRDTA-7MQ... , are size 5, pilot-operated, high performance screw-in valves with a 3/4-16 UNF-2A mounting thread. They are designed on the proven sliding-spool principle. These cartridges reduce the output pressure in proportion to the control flow, regardless of the input pressure. The required secondary pressure is controlled to the value set independently of the inlet pressure. If the specified pressure is exceeded, connection opens to restore the balance. These valves are mainly used in certain mobile and industrial applications to reduce the system pressure. The pressure is set by means of an adjusting spindle. All external parts of the screw-in valves are zinc-nickel plated and are thus suitable for use in the harshest operating environments. For installation and further information, please refer to the section related data sheets.

Technical data

General characteristics	Description, value, unit
Function group	pressure valve
Function	reducing function
Design	screw-in cartridge valve
Controls	proportional solenoid
Characteristic	direct acting, spool type
Construction size	NG 5
Thread size	3/4-16 UNF-2A
Mounting attitude	unrestricted (preferably vertical, coil down)
Weight	0.40 kg
Cavity acc. factory standard	AM
Tightening torque steel	40 Nm
Tightening torque aluminium	40 Nm
Tightening torque tolerance	± 10 %
Minimum ambient temperature	- 30 °C
Maximum ambient temperature	+ 60 °C
Surface protection	all external parts with zinc-nickel plating according to DIN EN ISO 19598
Sealing material	see ordering code
Seal kit order number	NBR: DS-247-N / FKM: DS-247-V

Hydraulic characteristics	Description, value, unit
Maximum operating pressure	250 bar
Maximum flow rate	15 l/min
Flow direction	see symbol
Hydraulic fluid	HL and HLP mineral oil according to DIN 51 524; other fluids on request!
Minimum fluid temperature	- 30 °C
Maximum fluid temperature	+ 70 °C
Viscosity range	15 ... 380 mm^2/s (cSt)
Recommended viscosity range	20 ... 130 mm^2/s (cSt)
Minimum fluid cleanliness (cleanlineless class according to ISO 4406:1999)	class 18/16/13
Nominal pressure range	...100 [1]) bar

NOTE!
[1]) For lower pressure 45 bar, 70 bar (640 psi, 1000 psi) valve DRDS_-7MQ...can be used.

ATTENTION!
If there is pressure at the secondary connection, this is added to the set pressure value.

WWW.SUMY.IR

Electric characteristics	Description, value, unit
Actuator type	solenoid coil
Solenoid coils type	36X48/16.1
Supply voltage DC	12/24 V DC
Supply voltage tolerance	± 10 %
Control current	12 V = 0...1600 mA / 24 V = 0...800 mA
Nominal power consumption	17.5 W
Relative duty cycle	100 %
Coil resistance R	cold value at 20°C - 12 V = 4.35 Ω / 24 V = 17.2 Ω / max. warm value - 12 V = 6.8 Ω / 24 V = 26.9 Ω
Response sensitivity with PWM	< 2 % I_N
Reproducibility with PWM	< 3 % p_N
Hysterese with PWM	3...6 % I_N
Reversal error with PWM	3...6 % I_N
Electrical connection coil	DIN EN 175301-803, 3-pole 2 P+E (IP 65)
Protection class solenoid coil to ISO 20 653 / EN 60 529	IP 65 / IP 67 / IP 69K, see “Ordering code” (with appropriate mating connector and proper fitting and sealing)

Performance graphs

measured with oil viscosity 33.0 mm²/s (cSt)

p = f (I) Pressure adjustment

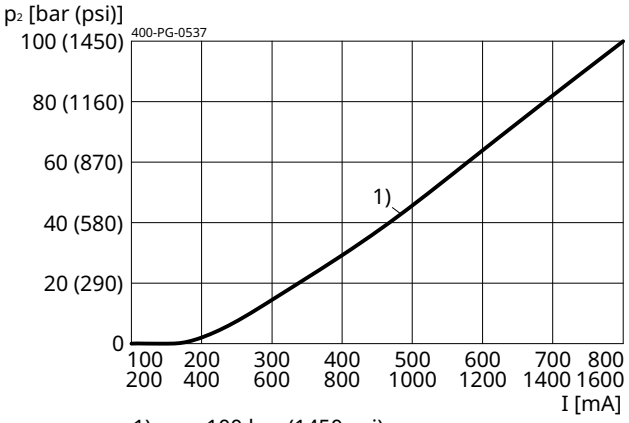

1) p_N = 100 bar (1450 psi)

p = f (Q) Pressure-flow rate

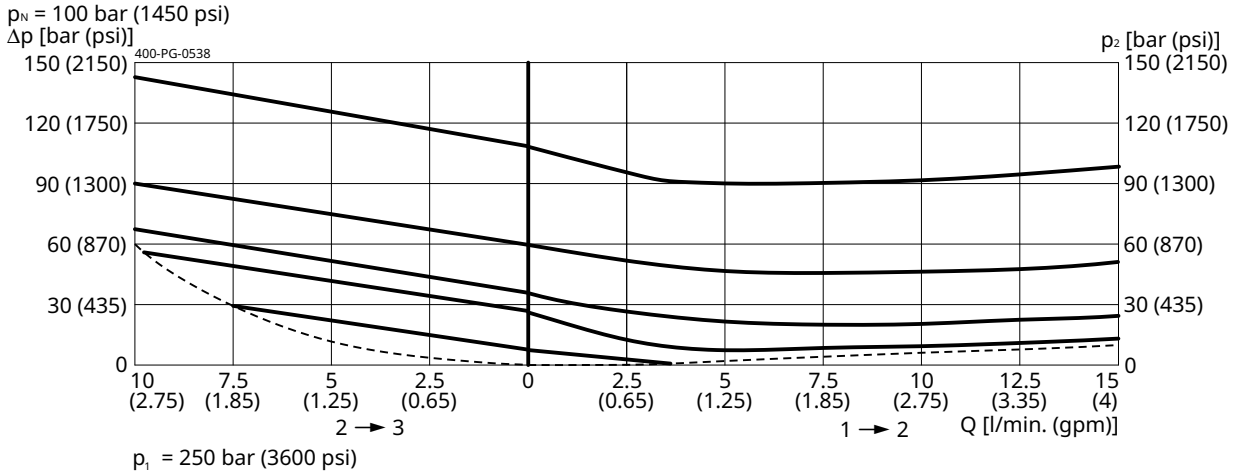

Installation

Beispiel für die Masseinheit:
Exampel for the dimensional units:

0.79 = 0.79 mm millimeter
(.031) = 0.031" inch

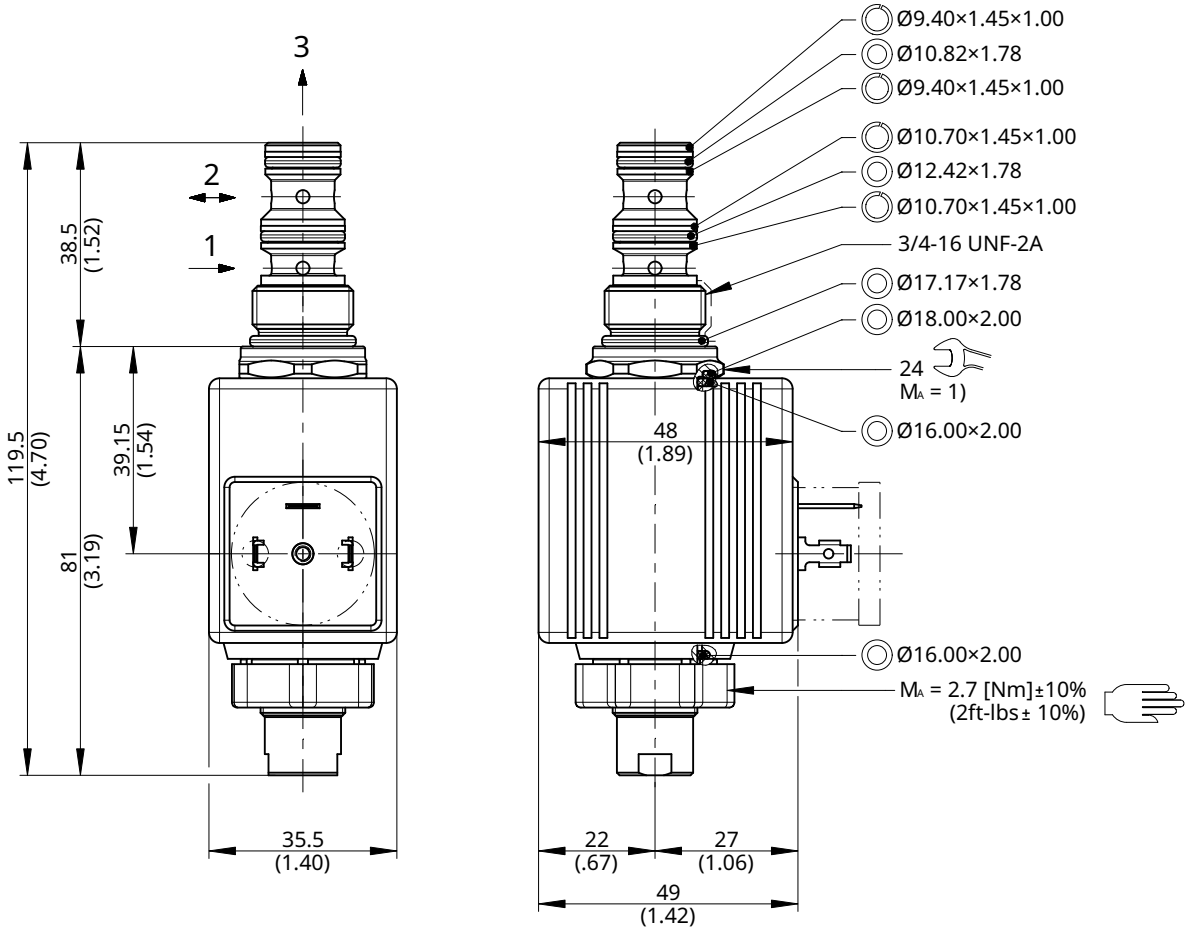

NOTE!
1) When fitting the screw-in cartridge valve, use the specified tightening torque. The value can be found in the chapter "Technical data".

IMPORTANT!
To achieve the screw-in valve's maximum performance rating, fit the solenoid coil as shown (with the plug pins nearest the knurled nut). The valve must be installed in a steel body.

NOTE!
The seals are not available individually. The seal kit order number can be found in the chapter "Technical data".

ATTENTION!
Only qualified personnel with mechanical skills may carry out any maintenance work. Generally, the only work that should ever be undertaken is to check, and possibly replace, the seals. When changing seals, oil or grease the new seals thoroughly before fitting them.

Ordering code

Ex. DR D T A - 7 M Q - 100 - 5 _ - O - 1 - 24 D G _

DR	=	pressure reducing cartridge
D	=	direct acting
T	=	elect. operated, COIL 36X48, 30 W, prop.
A ... Q	=	standard model according to valid data sheet
Z ... R	=	special model (on request)
7	=	pressure-reducing with full-flow pressure relief
M	=	cavity type AM
Q	=	special volume flow direction, reduced pressure at port 2
100	=	pressure range ...100 bar / ...1450 psi
5	=	nominal size 5
(blank)	=	NBR (nitril-butadien-rubber / BUNA) seals **(standard)**
V	=	FKM (fluorocarbon rubber / VITON) seals (special seals on request)
O	=	without manual override
1 ... 9	=	technical design no. (omit by ordering)
...	=	voltage e.g. 24 (24 V)
D	=	current DC
G	=	DIN EN 175301-803 connection — 3-pole 2 P+E **(standard)** — (IP 65)
GR	=	DIN EN 175301-803 connection — 3-pole 2 P+E, with protection diode — (IP 65)
J	=	Junior Timer plug connection — 2-pole radial — (IP 65)
JR	=	Junior Timer plug connection — 2-pole radial, with protection diode — (IP 65)
U	=	Deutsch plug connection DT04-2P — 2-pole radial — (IP 67/69K)
UR	=	Deutsch plug connection DT04-2P — 2-pole radial, with protection diode — (IP 67/69K)
		other plug-variants, please consult BUCHER.
(blank)	=	connection without mating plug **(standard)**
Q	=	only connection “G“ and “GR“ with mating plug

mating plug not supplied

IMPORTANT!
Not every combination of voltage values and plug connections available.

Related data sheets

Reference	Description
400-P-040011	form tools
400-P-040181	cavity AM
400-P-120112	solenoid coil 36X48-161
400-P-720111	threaded port body GAMA

info.ch@bucherhydraulics.com **www.bucherhydraulics.com**

© 2026 by Bucher Hydraulics AG Frutigen, 3714 Frutigen, Switzerland

All rights reserved.
Data is provided for the purpose of product description only, and must not be construed as warranted characteristics in the legal sense. The information does not relieve users from the duty of conducting their own evaluations and tests. Because the products are subject to continual improvement, we reserve the right to amend the product specifications contained in this catalogue.

BUCHER hydraulics

WWW.SUMY.IR

Pressure valve
Reducing function

Q_{max} = 25 l/min, p_{max} = 250 bar
Direct acting, spool type, proportional solenoid
Type series: DRDTA-7M-_-5...

- Screw-in cartridge valve for cavity AM
- All external parts with zinc-nickel plating according to DIN EN ISO 19598
- Installation in threaded port body type GAMA
- Excellent stability over the whole pressure and flow range
- With integral manual pressure setting
- The slip-on coil can be rotated, and it can be replaced without opening the hydraulic envelope
- Various plug-connector systems and voltages are available
- High pressure wet-armature solenoids

Symbol

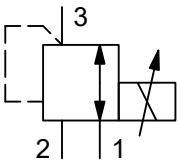

Description

The proportional pressure-reducing valves, series DRDTA-7M... , are size 5, pilot-operated, high performance screw-in valves with a 3/4-16 UNF-2A mounting thread. They are designed on the proven sliding-spool principle. These cartridges reduce the output pressure in proportion to the control flow, regardless of the input pressure. The required secondary pressure is controlled to the value set independently of the inlet pressure. If the specified pressure is exceeded, connection opens to restore the balance. To obtain a reliable pressure setting over the entire pressure range, the overall pressure range is divided into different pressure levels. These valves are mainly used in certain mobile and industrial applications to reduce the system pressure. The pressure is set by means of an adjusting spindle. All external parts of the screw-in valves are zinc-nickel plated and are thus suitable for use in the harshest operating environments. For installation and further information, please refer to the section related data sheets.

WWW.SUMY.IR

Technical data

General characteristics	Description, value, unit
Function group	pressure valve
Function	reducing function
Design	screw-in cartridge valve
Controls	proportional solenoid
Characteristic	direct acting, spool type
MTTFd value	150 years
Construction size	NG 5
Thread size	3/4-16 UNF-2A
Mounting attitude	unrestricted (preferably vertical, coil down)
Weight	0.40 kg
Cavity acc. factory standard	AM
Tightening torque steel	40 Nm
Tightening torque aluminium	40 Nm
Tightening torque tolerance	± 10 %
Minimum ambient temperature	- 30 °C
Maximum ambient temperature	+ 60 °C
Surface protection	all external parts with zinc-nickel plating according to DIN EN ISO 19598
Sealing material	see ordering code
Seal kit order number	NBR: DS-247-N / FKM: DS-247-V

Hydraulic characteristics	Description, value, unit
Maximum operating pressure	250 bar
Maximum flow rate	25 l/min
Restriction of the flow rate	depend on the inlet pressure [1])
Flow direction	see symbol
Hydraulic fluid	HL and HLP mineral oil according to DIN 51 524; other fluids on request!
Minimum fluid temperature	- 30 °C
Maximum fluid temperature	+ 70 °C
Viscosity range	15 ... 380 mm^2/s (cSt)
Recommended viscosity range	20 ... 130 mm^2/s (cSt)
Minimum fluid cleanliness (cleanlineless class according to ISO 4406:1999)	class 18/16/13
Opening pressure	...70 /...100 / ...150 bar
Pilot-oil consumption	0.1 ... 0.4 l/min
Nominal pressure range	pressure range 070 = ...70 bar pressure range 100 = ...100 bar pressure range 150 = ...150 bar

IMPORTANT!
[1]) The restrictions of the maximum flow rate depend on the inlet pressure. See performance graphs.

ATTENTION!
If there is pressure at the secondary connection, this is added to the set pressure value.

WWW.SUMY.IR

Electric characteristics	Description, value, unit
Actuator type	solenoid coil
Solenoid coils type	36X48/16.1
Supply voltage DC	12/24 V DC
Supply voltage tolerance	± 10 %
Control current	12 V = 0...1600 mA / 24 V = 0...800 mA
Nominal power consumption	17.5 W
Relative duty cycle	100 %
Coil resistance R	Cold value at 20° 12 V = 4.35 Ω 24 V = 17.2 Ω max. warm value 12 V = 6.8 Ω 24 V = 26.9 Ω
Response sensitivity with PWM	< 2 % I_N
Reproducibility with PWM	< 3 % p_N
Hysterese with PWM	3...6 % I_N
Reversal error with PWM	3...6 % I_N
Electrical connection coil	DIN EN 175301-803, 3-pole 2 P+E (IP 65)
Protection class solenoid coil to ISO 20 653 / EN 60 529	IP 65 / IP 67 / IP 69K, see “Ordering code” (with appropriate mating connector and proper fitting and sealing)

Performance graphs

measured with oil viscosity 33.0 mm²/s (cSt)

p = f (I) Pressure adjustment

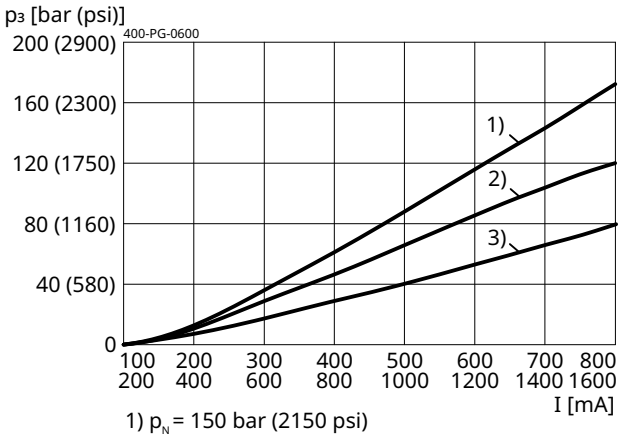

1) p_N = 150 bar (2150 psi)
2) p_N = 100 bar (1450 psi)
3) p_N = 70 bar (1000 psi)

Δp = f (Q) Pressure drop-flow rate characteristic

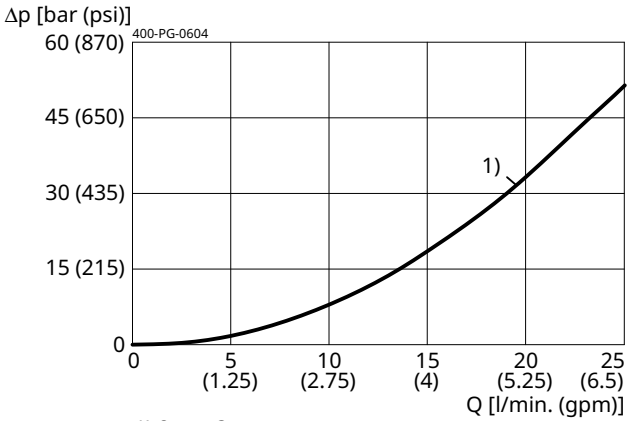

1) 2 → 3

Δp = f (Q) Pressure drop-flow rate characteristic

P_N = 150 bar (2150 psi)

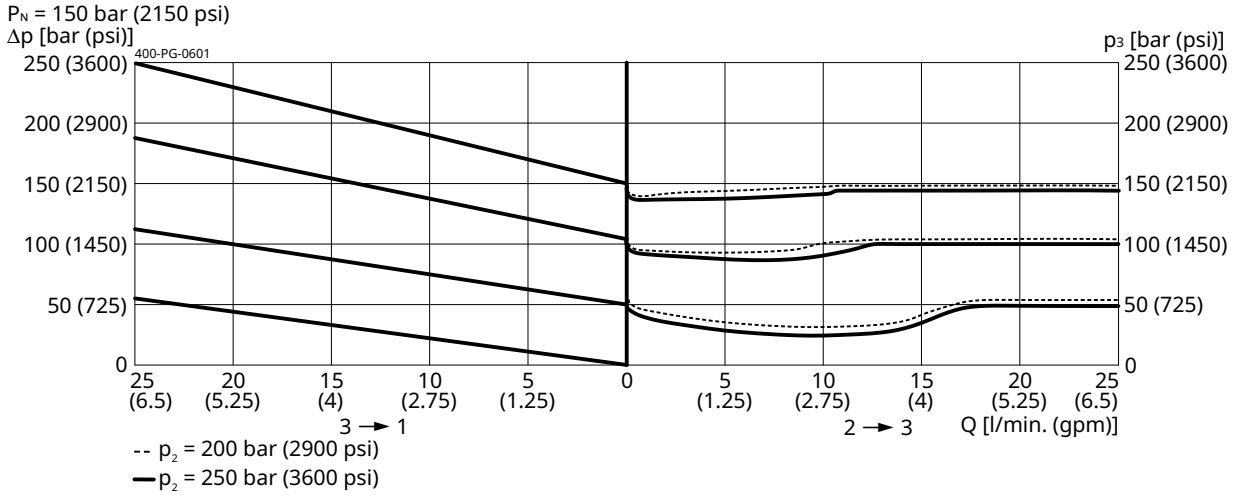

Δp = f (Q) Pressure drop-flow rate characteristic

P_N = 100 bar (1450 psi)

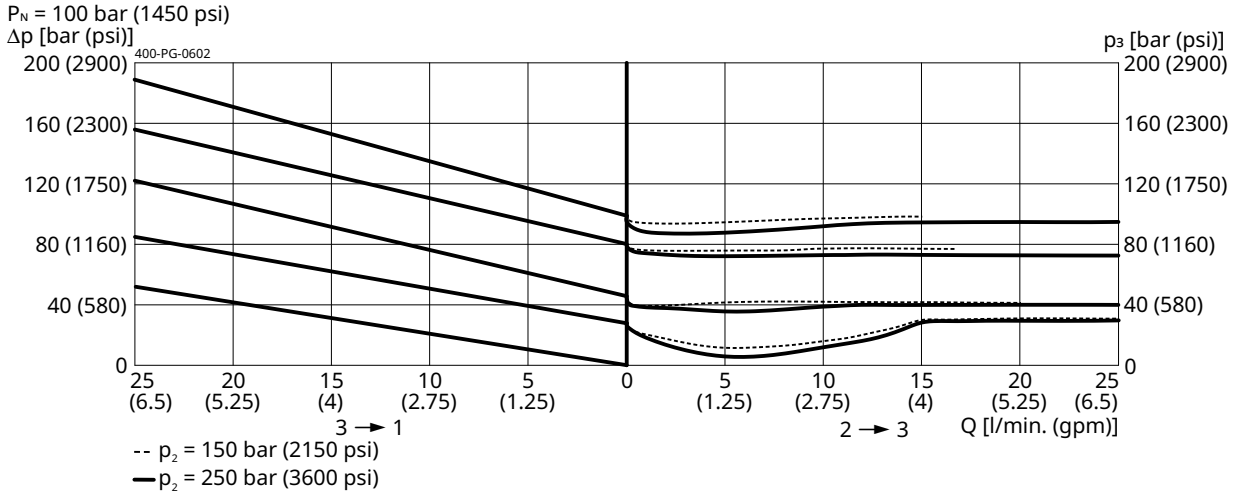

Δp = f (Q) Pressure drop-flow rate characteristic

P_N = 070 bar (1000 psi)

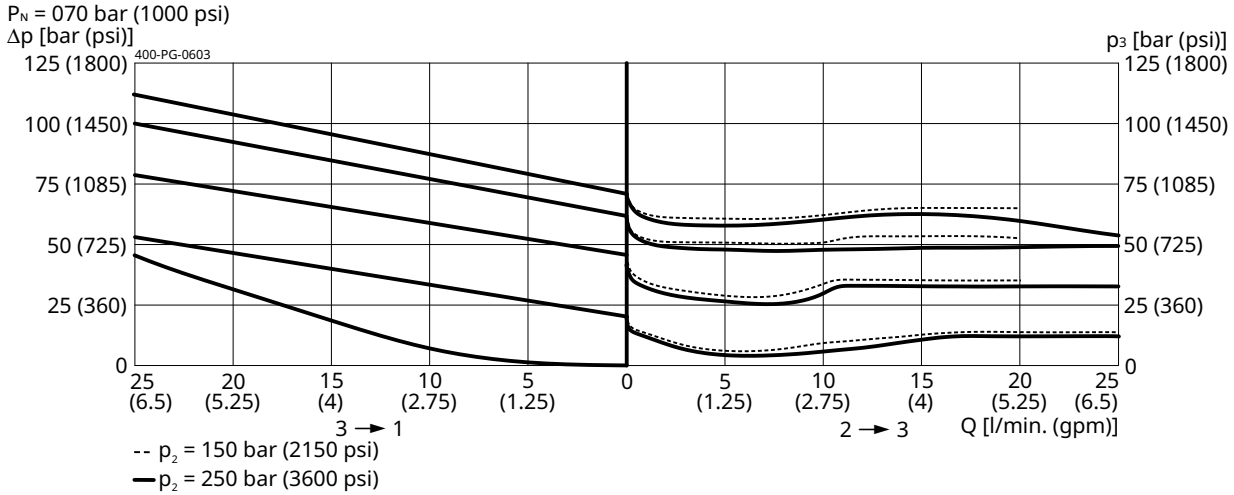

Installation

Beispiel für die Masseinheit:
Exampel for the dimensional units:

0.79	= 0.79 mm	millimeter
(.031)	= 0.031"	inch

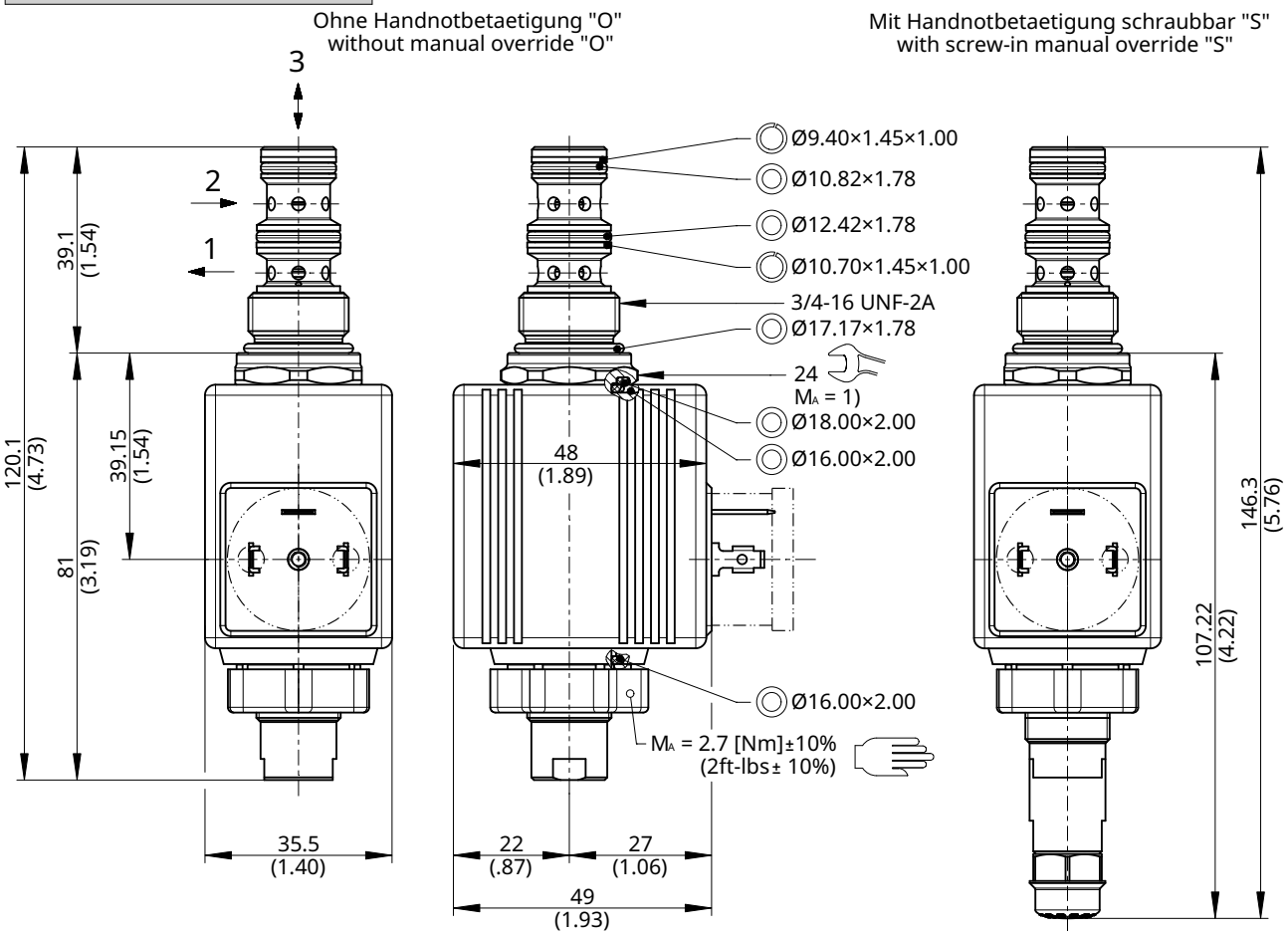

NOTE!
1) When fitting the screw-in cartridge valve, use the specified tightening torque. The value can be found in the chapter "Technical data".

IMPORTANT!
To achieve the screw-in valve's maximum performance rating, fit the solenoid coil as shown (with the plug pins nearest the knurled nut). The valve must be installed in a steel body.

NOTE!
The seals are not available individually. The seal kit order number can be found in the chapter "Technical data".

ATTENTION!
Only qualified personnel with mechanical skills may carry out any maintenance work. Generally, the only work that should ever be undertaken is to check, and possibly replace, the seals. When changing seals, oil or grease the new seals thoroughly before fitting them.

Manual pressure setting

Optionally, the proportional pressure screw-in cartridge valves can be supplied with an integral manual emergency pressure setting. If a proportional solenoid is faulty, for example, this manual pressure setting enables the required pressure to be set mechanically up to max. 60% of the nominal pressure. The manual pressure setting is not designed for adjusting the pressure in a dynamic control mode. The following steps must be observed.

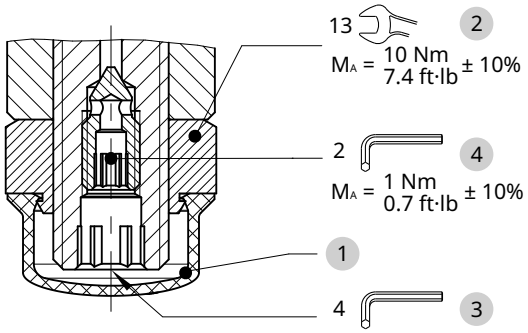

1. Remove the protective cap 1
2. Loosen the lock nut 2
3. Screw-in (turn to right) the adjusting spindle 3 until the required pressure is set.
4. Tighten the lock nut 2 to the specified torque.
5. Fit the protective cap 1

Reset to factory settings

To reset the proportional pressure-relief cartridges to their initial position (the factory setting), a constant flow rate and a pressure gauge that measures the pressure in the input port are needed. The pressure setting must not exceed the nominal pressure of the spring range in use. The following steps must be observed.

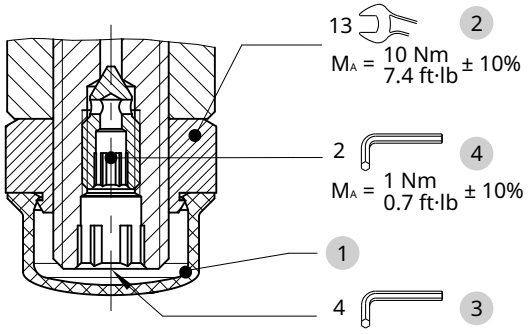

1. Ensure that the solenoid coil is de-energized
2. Remove the protective cap 1
3. Loosen the lock nut 2
4. Unscrew the adjusting spindle 3 to its end-stop
5. Screw-in the adjusting spindle 3 until the pressure on the gauge reaches the nominal pressure (pN) of the spring range in use
6. Tighten the lock nut 2 to the specified torque
7. Fit the protective cap 1

Air-bleeding (Type "O")

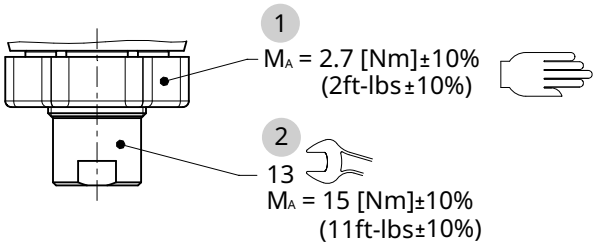

1. Set reduced pressure to minimum.
2. Loosen and remove the knurled nut 1 .
3. ⚠ **Caution!**

   Loosen the cap nut 2 approx. 1.5 turns. Oil will spray out when you loosen the cap nut 2 .
4. Slightly increase the reduced pressure several times and then lower it again until no more air escapes.
5. Tighten the cap nut 2 to the specified torque.
6. Refit the knurled nut 1 and tighten it to the specified torque.

Air-bleeding (Type "S")

The integrated air-bleed screw allows the proportional pressure valves to be vented if necessary. If the screw-in valve is mounted as preferred (solenoid-coil hanging), it is self-venting. To vent the valve manually, follow the steps below.

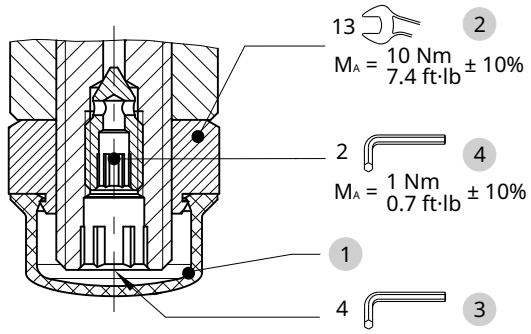

1. Remove the protective cap 1
2. Loosen the air-bleed screw 4 approx. 2 turns
3. Switch the valve ON/OFF several times until no more air bubbles escape
4. Tighten the air-bleed screw 4 to the specified torque
5. Fit the protective cap 1

Ordering code

Ex. DR D T A - 7 M - 150 - 5 _ - O - 1 - 24 D G _

DR	=	pressure reducing cartridge
D	=	direct acting
T	=	electrically operated, COIL 36X48, 30 W,prop.
A ... Q	=	standard model according to valid data sheet
Z ... R	=	special model (on request)
7	=	pressure-reducing with full-flow pressure relief
M	=	cavity type AM
070	=	pressure range ...70 bar / ...1000 psi
100	=	pressure range ...100 bar / ...1450 psi
150	=	pressure range ...150 bar / ...2150 psi
5	=	nominal size 5
(blank)	=	NBR (nitril-butadien-rubber / BUNA) seals **(standard)**
V	=	FKM (fluorocarbon rubber / VITON) seals (special seals on request)
O	=	without manual override **(standard)**
S	=	with screwable manual override
1 ... 9	=	technical design no. (omit by ordering)
...	=	voltage e.g. 24 (24 V)
D	=	current DC
G	=	DIN EN 175301-803 connection 3-pole 2 P+E **(standard)** (IP 65)
GR	=	DIN EN 175301-803 connection 3-pole 2 P+E, with protection diode (IP 65)
J	=	Junior Timer plug connection 2-pole radial (IP 65)
JR	=	Junior Timer plug connection 2-pole radial, with protection diode (IP 65)
U	=	Deutsch plug connection DT04-2P 2-pole radial (IP 67/69K)
UR	=	Deutsch plug connection DT04-2P 2-pole radial, with protection diode (IP 67/69K)
		other plug-variants, please consult BUCHER.
(blank)	=	connection without mating plug **(standard)**
Q	=	only connection “G“ and “GR“ with mating plug

mating plug not supplied

IMPORTANT!
Not every combination of voltage values and plug connections available.

Related data sheets

Reference	Description
400-P-040011	form tools
400-P-040181	cavity AM
400-P-120112	solenoid coil 36X48-161
400-P-720111	threaded port body GAMA
400-P-010101	MTTFd Values for Hydraulic Valves

info.ch@bucherhydraulics.com **www.bucherhydraulics.com**

© 2026 by Bucher Hydraulics AG Frutigen, 3714 Frutigen, Switzerland

All rights reserved.
Data is provided for the purpose of product description only, and must not be construed as warranted characteristics in the legal sense. The information does not relieve users from the duty of conducting their own evaluations and tests. Because the products are subject to continual improvement, we reserve the right to amend the product specifications contained in this catalogue.

BUCHER hydraulics
WWW.SUMY.IR

General information
Cavity

Type series: AGA

Dimensions and sectional view

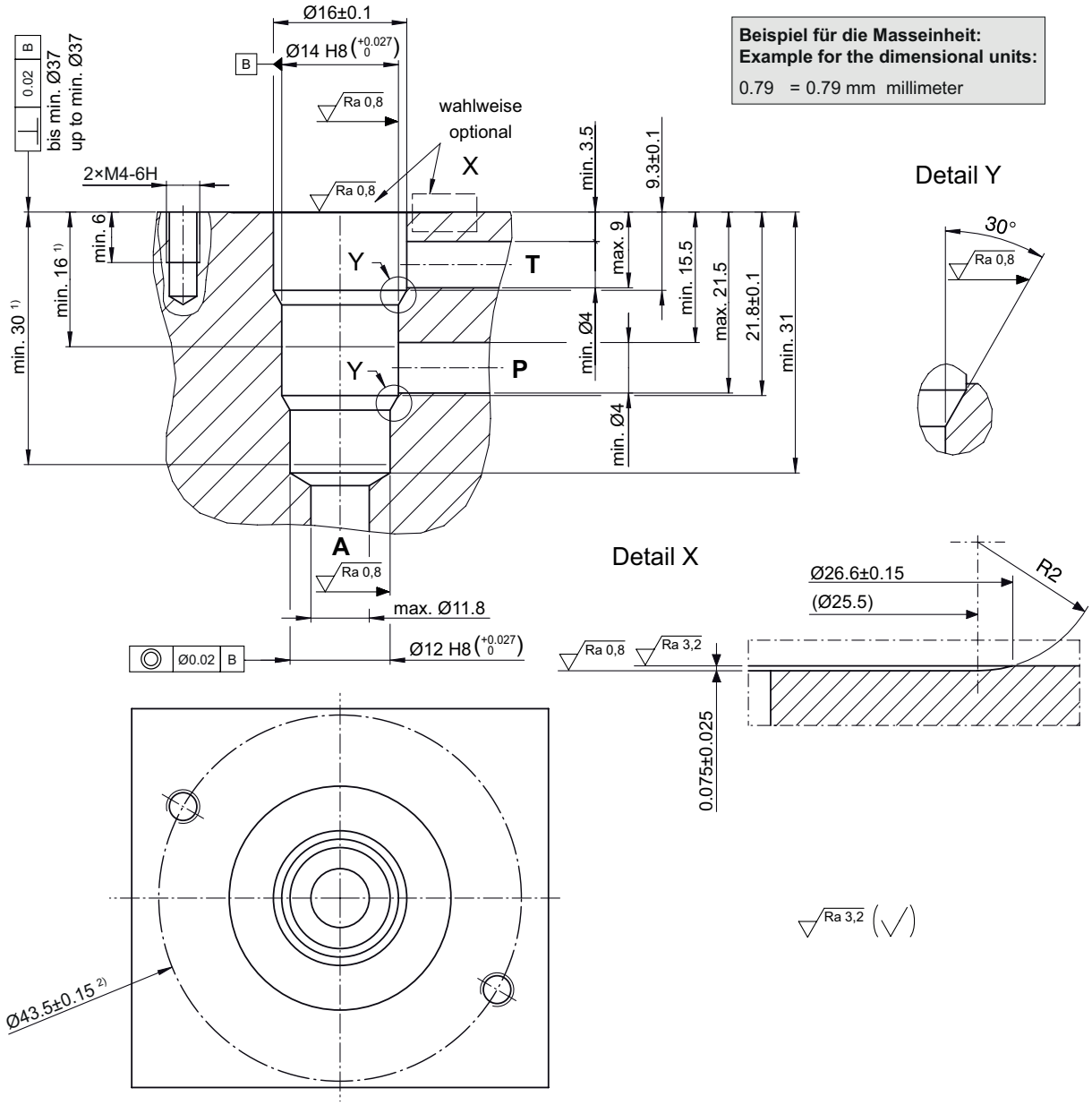

HINWEIS!
NOTE!

1) Passungstiefe / Minimum depth of specified diametral tolerance
2) Befestigungsbohrungen muessen immer im Winkel von 180° zueinander sein, können jedoch auf dem Teilkreis beliebig sein. Achtung: Befestigungsbohrungen dürfen Anschlüsse T und P nicht tangieren!
The mounting holes can be at any desired position but must be at 180° to each other on the PCD.
Note: they must not affect the T and P drillings!

Installation information

ATTENTION!
You must maintain the specified positional and diametral tolerances. To ensure trouble-free operation of the screw-in cartridges, we strongly recommend that pilot drilling, boring, reaming and cavity thread-cutting are always performed in one setup.

NOTE!
Cavity type to factory standard.

IMPORTANT!
To ensure proper sealing, machine either the seal depression as per Detail X, or the top surface Ra 0,8 to a minimum Ø40. In the case of the Bucher stepped reamer, the seal depression is incorporated in the tool.

NOTE!
We offer form tool sets for sale or hire. For further information, see data sheet 400-P-040011.

info.ch@bucherhydraulics.com **www.bucherhydraulics.com**

© 2023 by Bucher Hydraulics AG Frutigen, 3714 Frutigen, Switzerland

All rights reserved.
Data is provided for the purpose of product description only, and must not be construed as warranted characteristics in the legal sense. The information does not relieve users from the duty of conducting their own evaluations and tests. Because the products are subject to continual improvement, we reserve the right to amend the product specifications contained in this catalogue.

BUCHER hydraulics
WWW.SUMY.IR

Pressure valve
Reducing function

Q_{max} = 15 l/min, p_{max} = 70 bar
Direct acting, spool type, proportional solenoid
Type series: DDRCZ-7...

- Slip-in cartridge valve for cavity AGA
- All external parts with zinc-nickel plating according to DIN EN ISO 19598
- Installation in threaded port body type GAAA
- Excellent stability over the whole pressure and flow range
- Various plug-connector systems and voltages are available
- Operated by a proportional solenoid

Symbol

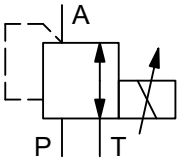

DDRCZ-7...

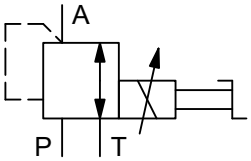

DDRCZ-7...S619

Description

Series DDRCZ-7... proportional 3-way pressure-reducing valves are direct acting push-in valves with a compact solenoid system and are available in sizes 2...5. They reduce the outlet pressure in A as a function of the control current signal and independently of the inlet pressure in P. In the initial position (solenoid de-energized) the inlet of the 3-way pressure-reducing valve is shut off and the outlet is connected to tank (port A to T). In control mode, the connection P to A opens until the pressure in port A reaches the preset level. If the pressure rises above the preset level, the control spool opens the A to T connection until balance is attained. Five pressure ranges are available in order to obtain precise pressure settings over the whole of the required pressure range. The maximum operating pressure depends on the particular pressure range. All external parts are zinc-nickel plated and are thus suitable for use in the harshest operating environments. These valves are predominantly used for reducing a system pressure in mobile and industrial applications. They are suitable for controlling larger directional valves, where they can be incorporated in the valve body or directly in the end covers, for example, and for controlling pumps and motors. The advantages are the small space requirement, 360° rotatability at installation, and easy installation of the plug-in cartridge thanks to the mounting clip.

WWW.SUMY.IR

The compact solenoid system also offers an ideal price/performance ratio, which is vital for reducing operating costs and capital expenditures. For self-assembly, please refer to the section related data sheets.

Technical data

General characteristics	Description, value, unit
Function group	pressure valve
Function	reducing function
Design	slip-in cartridge valve
Controls	proportional solenoid
Characteristic	direct acting, spool type
MTTFd value	150 years
Construction size	NG 02
Mounting attitude	unrestricted (preferably vertical, coil down)
Weight	0.45 kg
Cavity acc. factory standard	AGA
Tightening torque steel	1.8 Nm
Tightening torque aluminium	1.8 Nm
Tightening torque tolerance	± 10 %
Minimum ambient temperature	- 30 °C
Maximum ambient temperature	+ 50 °C
Surface protection	all external parts with zinc-nickel plating according to DIN EN ISO 19598
Sealing material	see ordering code
Seal kit order number	NBR: DS-154-N / FKM: DS-154-V

Hydraulic characteristics	Description, value, unit
Maximum operating pressure	70 bar
Maximum flow rate	15 l/min
Flow direction	see symbol
Hydraulic fluid	HL and HLP mineral oil according to DIN 51 524; other fluids on request!
Minimum fluid temperature	- 30 °C
Maximum fluid temperature	+ 70 °C
Viscosity range	15 ... 380 mm^2/s (cSt)
Recommended viscosity range	20 ... 130 mm^2/s (cSt)
Minimum fluid cleanliness (cleanliness class according to ISO 4406:1999)	class 18/16/13

WWW.SUMY.IR

Electric characteristics	Description, value, unit
Supply voltage DC	12 V DC 24 V DC
Control current	12 V = 0...1500 mA 24 V = 0...800 mA
Nominal power consumption	max. 18 W
Relative duty cycle	100 %
Coil resistance R	cold value at 20 °C = 12 V = 4.8 Ω / 24 V = 17.6 Ω cold value at -25 °C = 12 V = 4.0 Ω / 24 V = 14.5 Ω max. warm value = 12 V = 8.0 Ω / 24 V = 28.0 Ω
Recommended PWM frequency	200 Hz
Response sensitivity with PWM	< 1 % I_{max}
Reproducibility with PWM	< 2 % Q_{nenn}
Hysteresis with PWM	2...4 % I_{max}
Reversal error with PWM	2...4 % I_{max}
Electrical connection coil	several connection types available, see ordering code
Protection class solenoid coil to ISO 20 653 / EN 60 529	IP 65 / IP 67 / IP 69K, see Ordering code (with appropriate mating connector and proper fitting and sealing)

Performance graphs

measured with oil viscosity 33.0 mm²/s (cSt)

p = f (I) Pressure adjustment

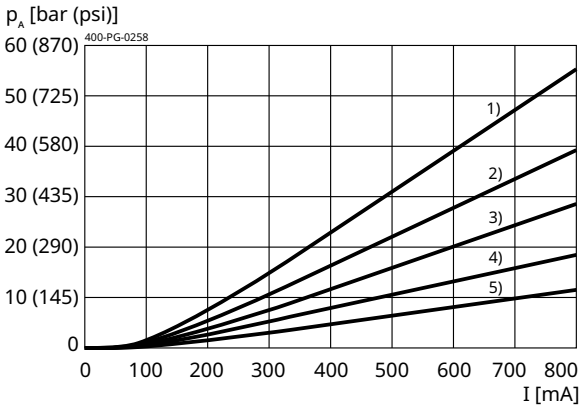

1) = pN 55 bar (800 psi)
2) = pN 40 bar (580 psi)
3) = pN 30 bar (435 psi)
4) = pN 20 bar (290 psi)
5) = pN 11 bar (160 psi)

p = f (I) Pressure adjustment

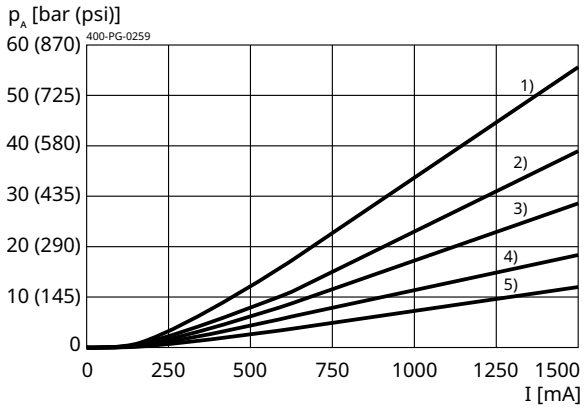

1) = pN 55 bar (800 psi)
2) = pN 40 bar (580 psi)
3) = pN 30 bar (435 psi)
4) = pN 20 bar (290 psi)
5) = pN 11 bar (160 psi)

p = f (Q) Pressure-flow rate

DDRCZ-7055...

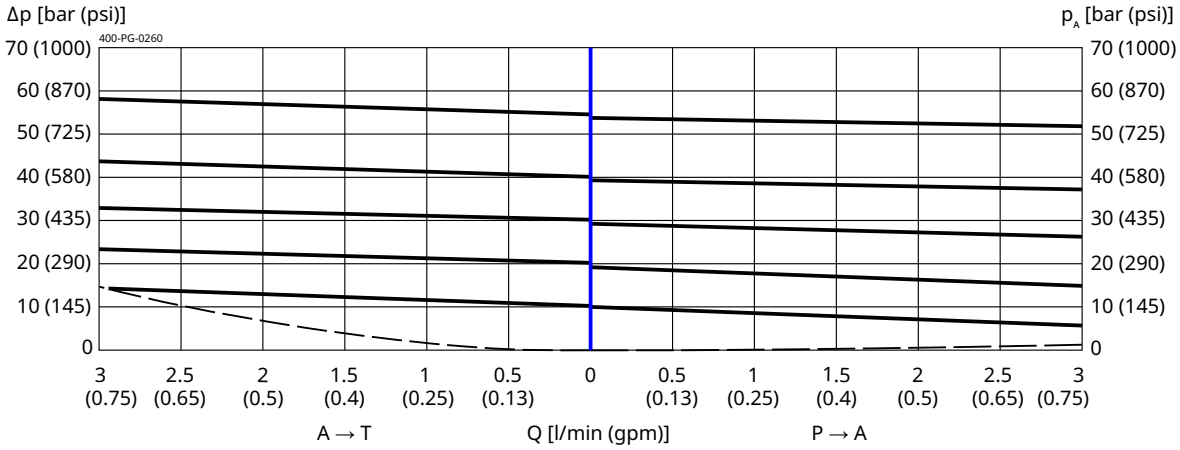

p = f (Q) Pressure-flow rate

DDRCZ-7040...

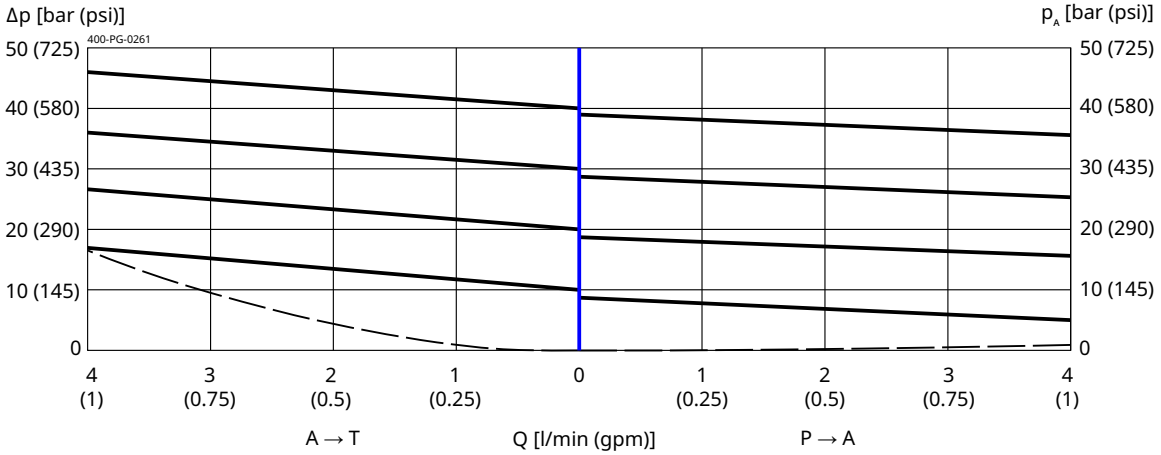

p = f (Q) Pressure-flow rate

DDRCZ-7030...

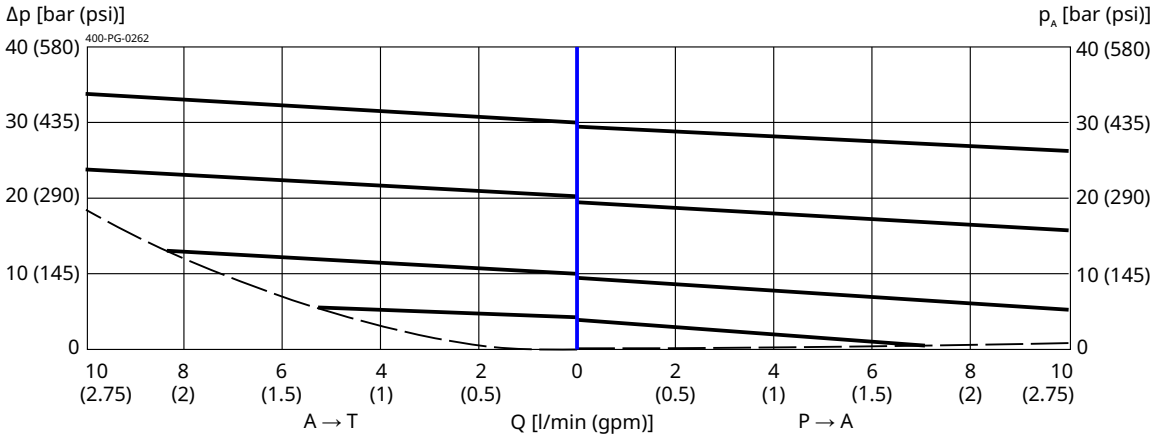

p = f (Q) Pressure-flow rate

DDRCZ-7020...

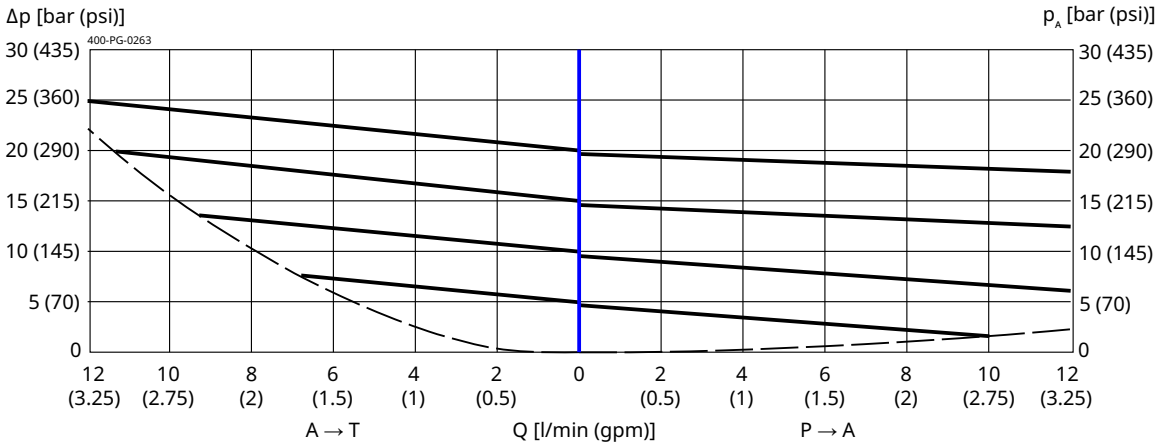

p = f (Q) Pressure-flow rate

DDRCZ-7011...

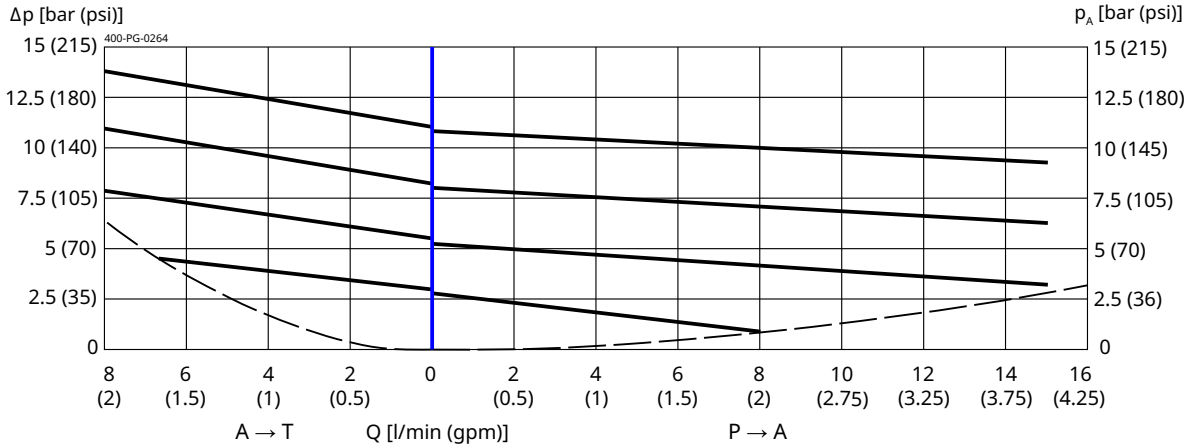

Installation

Beispiel für die Masseinheit:
Example for the dimensional units:

0.79 = 0.79 mm millimeter
(.031) = 0.031'' inch

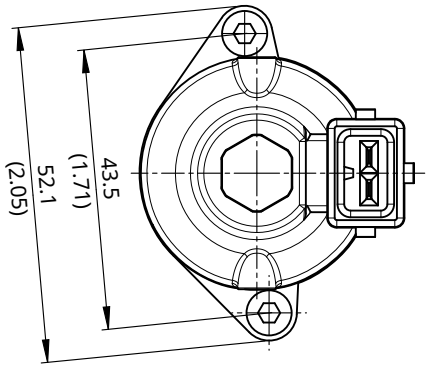

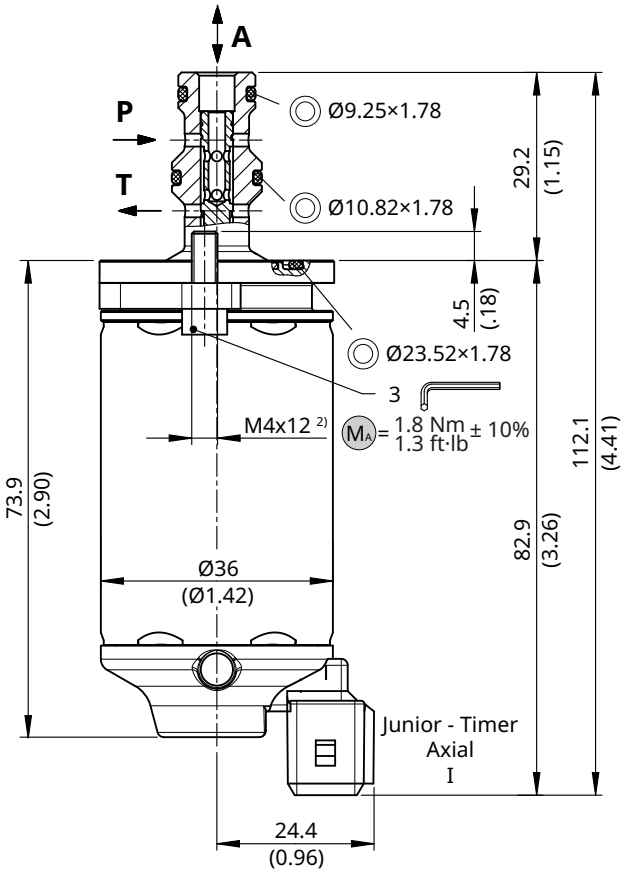

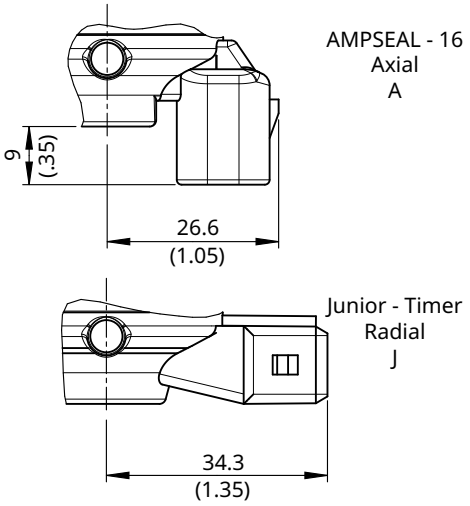

NOTE!

- Observe tightening torque M_A.
- Mount the valve preferably suspended (automatic air bleed).
- The valve is factory-set, no further adjustments are necessary.

ATTENTION!

Only qualified personnel with mechanical skills may carry out the following work:

- installation and, if necessary, adjustment.
- inspection and, if necessary, replacement of the seals shown in the illustration. New seals must only be installed after being oiled or greased (seal kit; see "Technical Data").

Auxiliary manual adjustment

As an option, series DDRCZ... proportional 3-way pressure- reducing valves can be provided with an auxiliary manual adjustment, type S619. In the event of a power failure, for example, it can be used to set the required pressure mechanically.

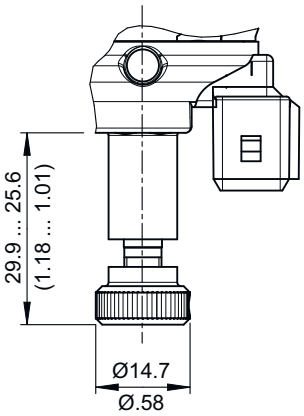

Ordering code

Ex. DDR C Z - 7 011 - 2 _ - 3 24 D _ S619

DDR	=	pressure-reducing cartridge, direct acting
C	=	compact solenoid (proportional)
A ...Q	=	standard model according to valid data sheet
Y ... R	=	special model (on request)
7	=	3-way pressure-reducing
011	=	pressure range ... 11 bar
020	=	pressure range ... 20 bar
030	=	pressure range ... 30 bar
040	=	pressure range ... 40 bar
055	=	pressure range ... 55 bar
2	=	nominal size 2 for pressure range 055
2	=	nominal size 2 for pressure range 040
3	=	nominal size 3 for pressure range 030
4	=	nominal size 4 for pressure range 020
5	=	nominal size 5 for pressure range 011
(blank)	=	NBR (nitril-butadien-rubber / BUNA) seals **(standard)**
V	=	FKM (fluorocarbon rubber / VITON) seals (special seals on request)
1...9	=	technical design no. (omit by ordering)
...	=	voltage e.g. 24 (24 V)
D	=	current DC

(blank)	=	DIN EN 175301-803 connection	3-pole 2 P+E **(standard)**	(IP 65)	with mating plug
J	=	Junior Timer plug connection	2-pole radial	(IP 65)	mating plug not supplied
I	=	Junior Timer plug connection	2-pole axial	(IP 65)	mating plug not supplied
D	=	Deutsch plug connection DT04-2P	2-pole 45°	(IP 67/69K)	mating plug not supplied
A	=	AMPSEAL plug connection	2-pole axial	(IP 67/69K)	mating plug not supplied
F	=	flying leads (20 inch / 500 mm)		(IP 65)	mating plug not supplied
		other plug-variants, please consult BUCHER.			

S619	=	as option: auxiliary manual adjustment (mechanical pressure setting)

IMPORTANT!
Not every combination of voltage values, current type and plug connections available.

Related data sheets

Reference	Description
400-P-040011	form tools
400-P-010101	MTTFd Values for Hydraulic Valves
400-P-040142	cavity AGA
400-P-712101	threaded port body GAAA

info.ch@bucherhydraulics.com **www.bucherhydraulics.com**

© 2026 by Bucher Hydraulics AG Frutigen, 3714 Frutigen, Switzerland

All rights reserved.
Data is provided for the purpose of product description only, and must not be construed as warranted characteristics in the legal sense. The information does not relieve users from the duty of conducting their own evaluations and tests. Because the products are subject to continual improvement, we reserve the right to amend the product specifications contained in this catalogue.

BUCHER hydraulics

WWW.SUMY.IR

Pressure valve
Reducing function

Q_{max} = 15 l/min, p_{max} = 100 bar
Direct acting, spool type, proportional solenoid
Type series: DDRRZ-7...

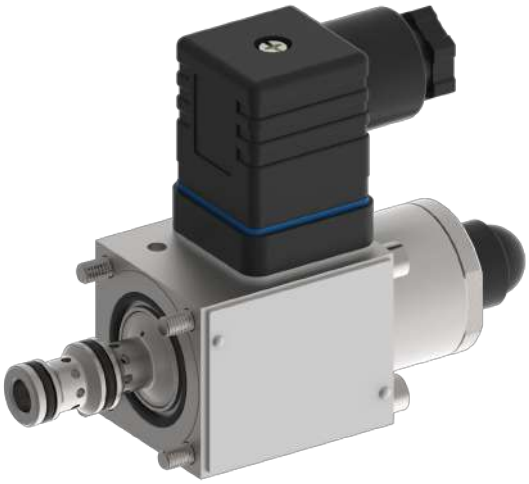

- Slip-in cartridge valve for cavity AG
- All external parts with zinc-nickel plating according to DIN EN ISO 19598
- Installation in threaded port body type GAAA
- Excellent stability over the whole pressure and flow range
- Operated by a proportional solenoid
- High pressure wet-armature solenoids
- Various plug-connector systems and voltages are available

Symbol

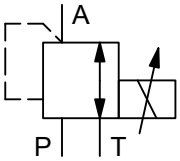

Description

Series DDRRZ-7_... proportional 3-way pressure-reducing valves are direct acting, spool-type, push-in cartridges and are available in sizes 2...5. They reduce the outlet pressure in A as a function of the control current signal and independently of the inlet pressure in P. In the initial position (solenoid de-energized) the inlet of the 3-way pressure-reducing cartridge is shut off and the outlet is connected to tank (port A to T). In control mode, the connection P to A opens until the pressure in port A reaches the preset level. If the pressure rises above the preset level, the control spool opens the A to T connection until balance is attained. Five pressure ranges are available. To accommodate a maximum operating pressure (inlet pressure) of pmax 100 bar, the “H” model must be used. With other models the maximum operating pressure is dependent on the pressure range. They are suitable for controlling larger directional valves, where they can be incor-

WWW.SUMY.IR

porated in the valve body or directly in the end covers, for example, and for controlling pumps and motors. All external parts of the cartridge are zinc-nickel plated and are thus suitable for use in the harshest operating environments. These valves are predominantly used for reducing a system pressure in mobile and industrial applications. For self-assembly, please refer to the section related data sheets.

Technical data

General characteristics	Description, value, unit
Function group	pressure valve
Function	reducing function
Design	slip-in cartridge valve
Controls	proportional solenoid
Characteristic	direct acting, spool type
MTTFd value	150 years
Construction size	NG 04
Mounting attitude	unrestricted (preferably vertical, coil down)
Weight	0.55 kg
Cavity acc. factory standard	AG
Tightening torque steel	2.6 Nm
Tightening torque aluminium	2.6 Nm
Tightening torque tolerance	± 10 %
Minimum ambient temperature	- 30 °C
Maximum ambient temperature	+ 50 °C
Surface protection	all external parts with zinc-nickel plating according to DIN EN ISO 19598
Seal kit order number	NBR: DS-154-N / FKM: DS-154-V

WWW.SUMY.IR

Hydraulic characteristics	Description, value, unit
Maximum operating pressure	100 bar
Restriction of the operating pressure	pressure range 011: 20 bar pressure range 020: 30 bar pressure range 030: 40 bar pressure range 040: 50 bar pressure range 055: 70 bar type H, all pressure ranges: 100 bar
Maximum back pressure, return pressure, tank pressure	static, not controlling: p_{max} 50 bar while controlling: < 2 % pN
Maximum flow rate	15 l/min
Control flow range	pressure range 011: 15 l/min pressure range 020: 12 l/min pressure range 030: 10 l/min pressure range 040: 3.5 l/min pressure range 055: 3 l/min
Flow direction	see symbol
Hydraulic fluid	HL and HLP mineral oil according to DIN 51 524; other fluids on request!
Minimum fluid temperature	- 30 °C
Maximum fluid temperature	+ 70 °C
Viscosity range	15 ... 380 mm^2/s (cSt)
Recommended viscosity range	20 ... 130 mm^2/s (cSt)
Minimum fluid cleanliness (cleanliness class according to ISO 4406:1999)	class 18/16/13
Definition of cracking pressure for relief valve	static, not controlling, pmax 50 bar / while controlling < 2 % pN
Nominal pressure range	nominal pressure range 055: ...55 bar nominal pressure range 040: ...40 bar nominal pressure range 030: ...30 bar nominal pressure range 020: ...20 bar nominal pressure range 011: ...11 bar

WWW.SUMY.IR

Electric characteristics	Description, value, unit
Supply voltage DC	12 V DC 24 V DC
Control current	12 V = 0...1400 mA 24 V = 0...800 mA
Nominal power consumption	max. 19 W
Relative duty cycle	100 %
Coil resistance R	cold value at 20 °C = 12 V = 6.4 Ω / 24 V = 17.2 Ω cold value at -25 °C = 12 V = 5.2 Ω / 24 V = 14.1 Ω max. warm value = 12 V = 10.0 Ω / 24 V = 27.0 Ω
Recommended PWM frequency	200 Hz
Response sensitivity with PWM	< 1 % I_{max}
Reproducibility with PWM	< 2 % Q_{nenn}
Hysteresis with PWM	2...4 % I_{max}
Reversal error with PWM	2...4 % I_{max}
Electrical connection coil	DIN EN 175301-803, 3-pole 2 P+E (IP 65)
Protection class solenoid coil to ISO 20 653 / EN 60 529	several classes of protection available, see ordering code (with appropriate mating connector and proper fitting and sealing)

Performance graphs

measured with oil viscosity 33.0 mm²/s (cSt)

p = f (I) Pressure adjustment

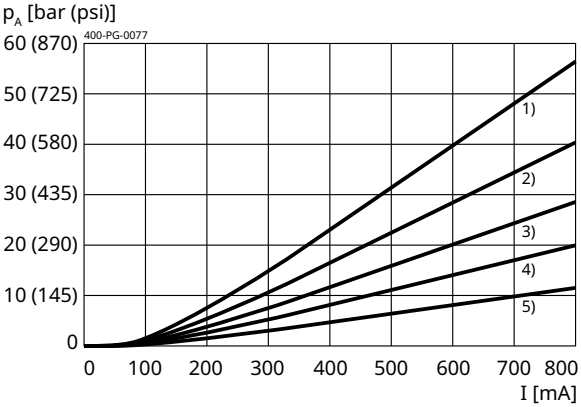

1) p_N 55 bar (800 psi)
2) p_N 40 bar (580 psi)
3) p_N 30 bar (435 psi)
4) p_N 20 bar (290 psi)
5) p_N 11 bar (160 psi)

p = f (I) Pressure adjustment

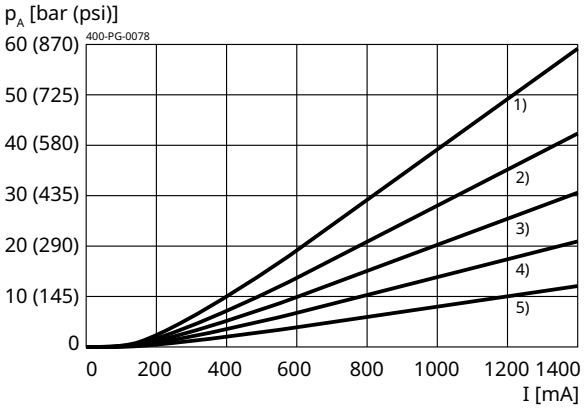

1) p_N 55 bar (800 psi)
2) p_N 40 bar (580 psi)
3) p_N 30 bar (435 psi)
4) p_N 20 bar (290 psi)
5) p_N 11 bar (160 psi)

p = f (Q) Pressure-flow rate

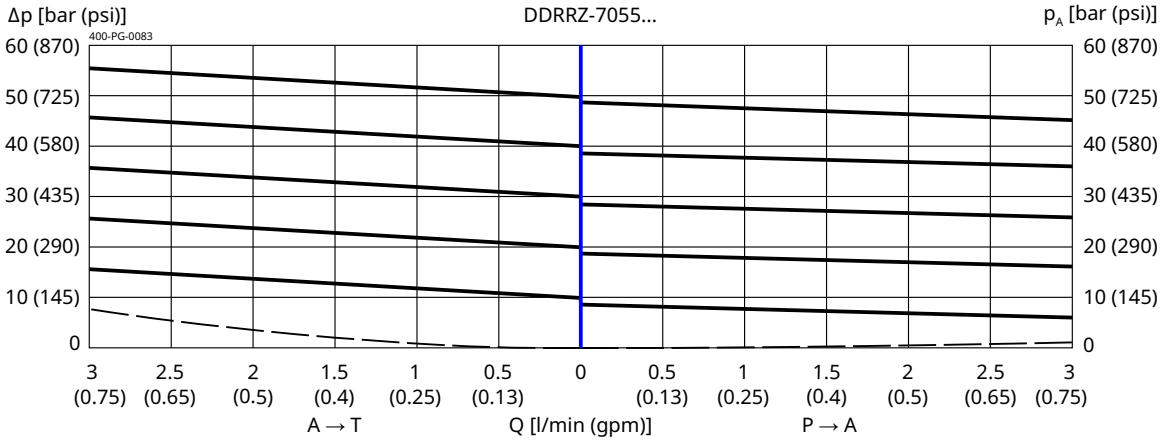

p = f (Q) Pressure-flow rate

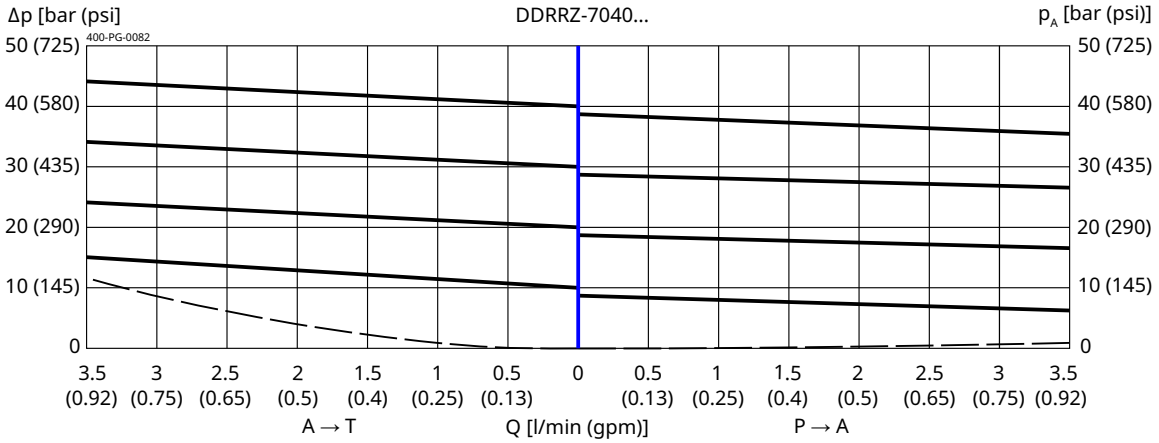

p = f (Q) Pressure-flow rate

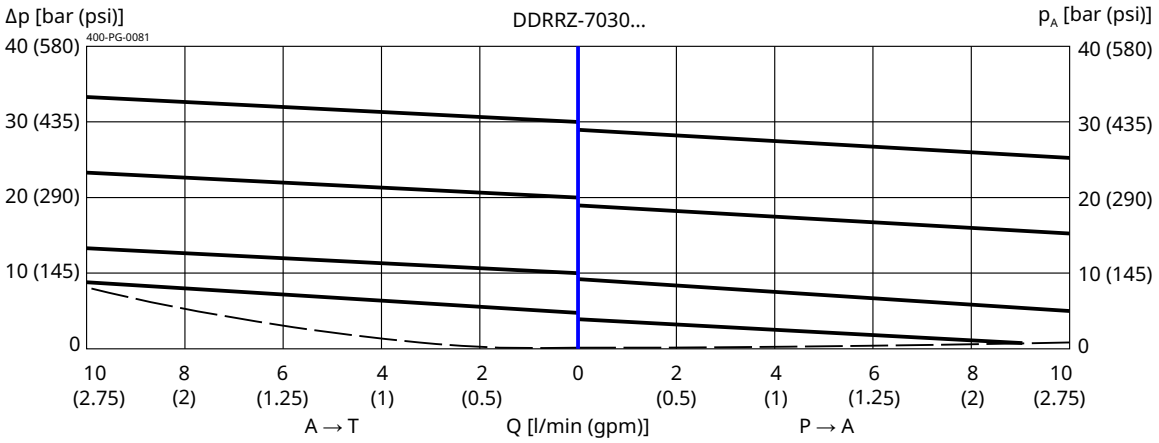

p = f (Q) Pressure-flow rate

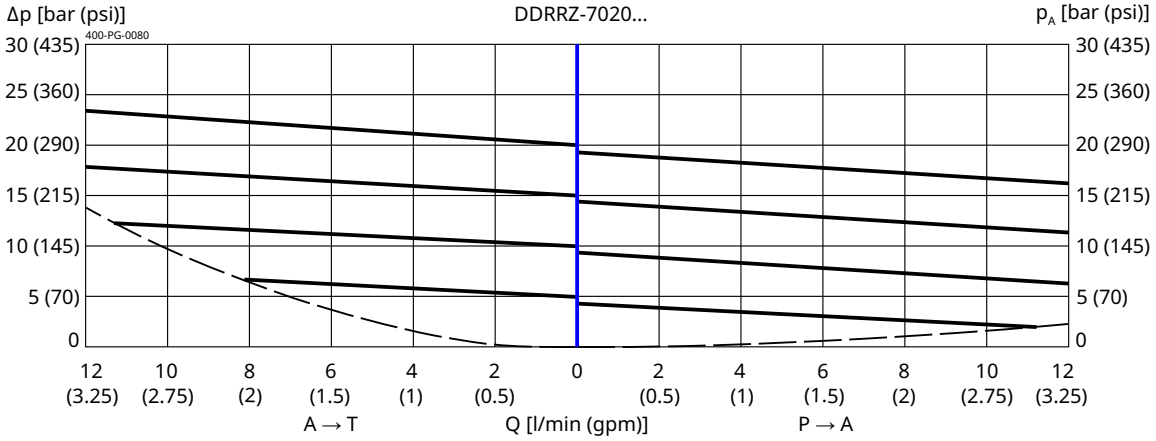

p = f (Q) Pressure-flow rate

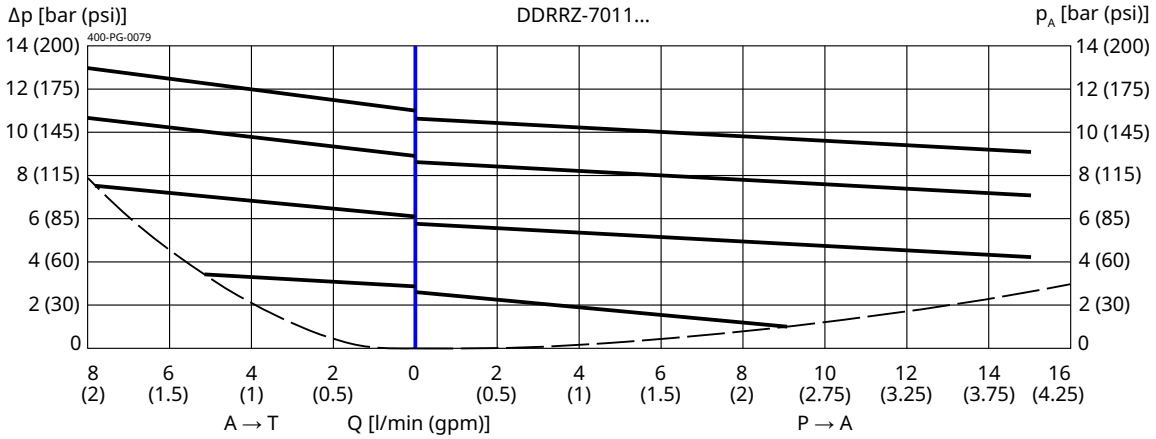

Installation

Beispiel für die Masseinheit:
Example for the dimensional units:

0.79 = 0.79 mm millimeter
(.031) = 0.031'' inch

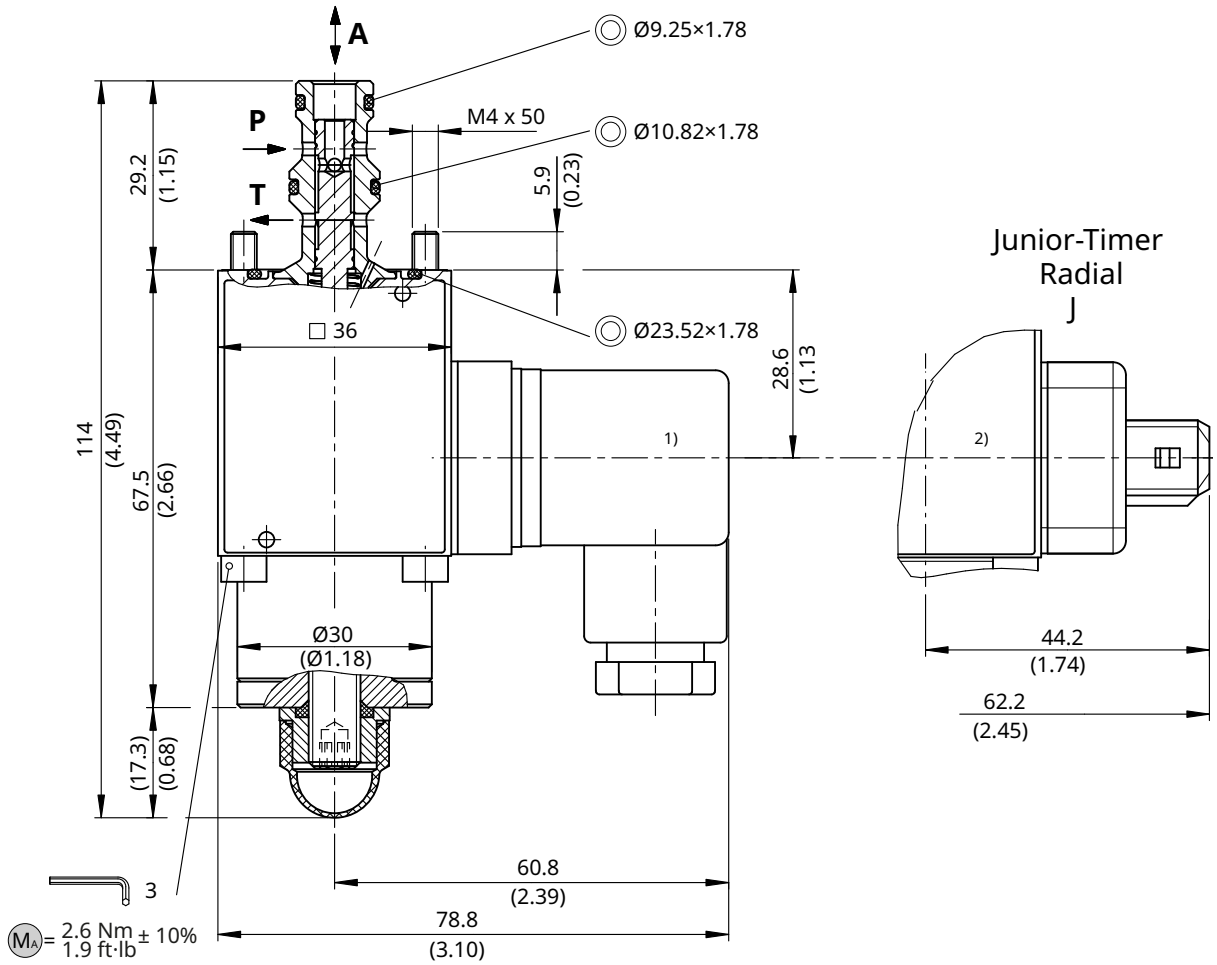

NOTE!

- Observe tightening torque MA .
- Mount the valve preferably suspended (automatic air bleed).
- The valve is factory-set, no further adjustments are necessary.

ATTENTION!

Only qualified personnel with mechanical skills may carry out the following work:

- installation and, if necessary, adjustment.
- inspection and, if necessary, replacement of the seals shown in the illustration. New seals must only be installed after being oiled or greased (seal kit; see "Technical Data").

Ordering code

Ex. DDR R Z - 7 011 - 2 - _ _ - 2 24 D _

DDR = pressure-reducing cartridge, direct acting
R = electrically operated, □36, proportional solenoid
A ...Q = standard model according to valid data sheet
Y ... R = special model (on request)
7 = 3-way pressure-reducing
011 = pressure range ... 11 bar
020 = pressure range ... 20 bar
030 = pressure range ... 30 bar
040 = pressure range ... 40 bar
055 = pressure range ... 55 bar
2 = nominal size 2 for pressure range 055
2 = nominal size 2 for pressure range 040
3 = nominal size 3 for pressure range 030
4 = nominal size 4 for pressure range 020
5 = nominal size 5 for pressure range 011
(blank) = NBR (nitril-butadien-rubber / BUNA) seals **(standard)**
V = FKM (fluorocarbon rubber / VITON) seals (special seals on request)
(blank) = armature without orifice **(standard)**
H = armature with orifice (for higher inlet pressure, p_{max}100 bar)
1...9 = technical design no. (omit by ordering)
... = voltage e.g. 24 (24 V)
D = current DC

(blank) =	DIN EN 175301-803 connection	3-pole 2 P+E **(standard)**	(IP 65)	with mating plug
M100 =	DIN EN 175301-803 connection	3-pole 2 P+E	(IP 65)	mating plug not supplied
J =	Junior Timer plug connection	2-pole radial	(IP 65)	
D =	Deutsch plug connection DT04-2P	2-pole 45° (on request)	(IP 67)	

IMPORTANT!
Not every combination of voltage values, current type and plug connections available.

Related data sheets

Reference	Description
400-P-040011	form tools
400-P-010101	MTTFd Values for Hydraulic Valves
400-P-040141	cavity AG
400-P-712101	threaded port body GAAA

info.ch@bucherhydraulics.com **www.bucherhydraulics.com**

© 2026 by Bucher Hydraulics AG Frutigen, 3714 Frutigen, Switzerland

All rights reserved.
Data is provided for the purpose of product description only, and must not be construed as warranted characteristics in the legal sense. The information does not relieve users from the duty of conducting their own evaluations and tests. Because the products are subject to continual improvement, we reserve the right to amend the product specifications contained in this catalogue.

BUCHER hydraulics

WWW.SUMY.IR

Pressure valve
Reducing function

Q_{max} = 15 l/min, p_{max} = 250 bar
Direct acting, spool type, proportional solenoid
Type series: DRDSA-7MQ-_-5...

- Screw-in cartridge valve for cavity AM
- All external parts with zinc-nickel plating according to DIN EN ISO 19598
- Installation in threaded port body type GAMA
- Excellent stability over the whole pressure and flow range
- The slip-on coil can be rotated, and it can be replaced without opening the hydraulic envelope
- Various plug-connector systems and voltages are available
- High pressure wet-armature solenoids

Symbol

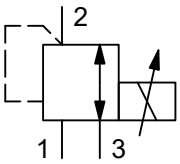

Description

The proportional pressure-reducing valves, series DRDSA-7MQ... , are size 5, pilot-operated, high performance screw-in valves with a 3/4-16 UNF-2A mounting thread. They are designed on the proven sliding-spool principle. These cartridges reduce the output pressure in proportion to the control flow, regardless of the input pressure. The required secondary pressure is controlled to the value set independently of the inlet pressure. If the specified pressure is exceeded, connection opens to restore the balance. To obtain a reliable pressure setting over the entire pressure range, the overall pressure range is divided into different pressure levels. These valves are mainly used in certain mobile and industrial applications to reduce the system pressure. The pressure is set by means of an adjusting spindle. All external parts of the screw-in valves are zinc-nickel plated and are thus suitable for use in the harshest operating environments. For installation and further information, please refer to the section related data sheets.

Technical data

General characteristics	Description, value, unit
Function group	pressure valve
Function	reducing function
Design	screw-in cartridge valve
Controls	proportional solenoid
Characteristic	direct acting, spool type
Construction size	NG 5
Thread size	3/4-16 UNF-2A
Mounting attitude	unrestricted (preferably vertical, coil down)
Weight	0.40 kg
Cavity acc. factory standard	AM
Tightening torque steel	40 Nm
Tightening torque aluminium	40 Nm
Tightening torque tolerance	± 10 %
Minimum ambient temperature	- 30 °C
Maximum ambient temperature	+ 50 °C
Surface protection	all external parts with zinc-nickel plating according to DIN EN ISO 19598
Sealing material	see ordering code
Seal kit order number	NBR: DS-247-N / FKM: DS-247-V

Hydraulic characteristics	Description, value, unit
Maximum operating pressure	250 bar
Maximum flow rate	15 l/min
Flow direction	see symbol
Hydraulic fluid	HL and HLP mineral oil according to DIN 51 524; other fluids on request!
Minimum fluid temperature	- 30 °C
Maximum fluid temperature	+ 70 °C
Viscosity range	15 ... 380 mm^2/s (cSt)
Recommended viscosity range	20 ... 130 mm^2/s (cSt)
Minimum fluid cleanliness (cleanlineless class according to ISO 4406:1999)	class 18/16/13
Nominal pressure range	[1]) Pressure range 045 = ...45bar Pressure range 070 = ...70 bar

NOTE!
[1]) For higher pressure up to 100 bar (1400 psi) valve DRDTA-7MQ.... can be used.

ATTENTION!
If there is pressure at the secondary connection, this is added to the set pressure value.

WWW.SUMY.IR

Electric characteristics	Description, value, unit
Actuator type	solenoid coil
Solenoid coils type	D36
Supply voltage DC	12/24 V DC
Supply voltage tolerance	± 10 %
Control current	12 V = 0...1400 mA / 24 V = 0...760 mA
Relative duty cycle	100 %
Coil resistance R	Cold value at 20°C - 12 V = 5.8 Ω / 24 V = 20.9 Ω / max. warm value - 12 V = 9.1 Ω / 24 V = 32.7 Ω
Response sensitivity with PWM	< 2 % I_N
Reproducibility with PWM	< 3 % p_N
Hysterese with PWM	3...6 % I_N
Reversal error with PWM	3...6 % I_N
Electrical connection coil	DIN EN 175301-803, 3-pole 2 P+E (IP 65)
Protection class solenoid coil to ISO 20 653 / EN 60 529	IP 65 / IP 67 / IP 69K, see “Ordering code” (with appropriate mating connector and proper fitting and sealing)

Performance graphs

measured with oil viscosity 33.0 mm²/s (cSt)

p = f (I) Pressure adjustment

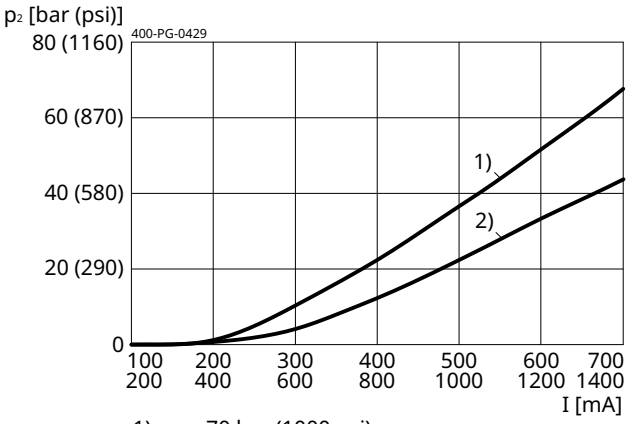

1) p_N = 70 bar (1000 psi)
2) p_N = 45 bar (650 psi)

p = f (Q) Pressure-flow rate

p_N = 70 bar (1000 psi)

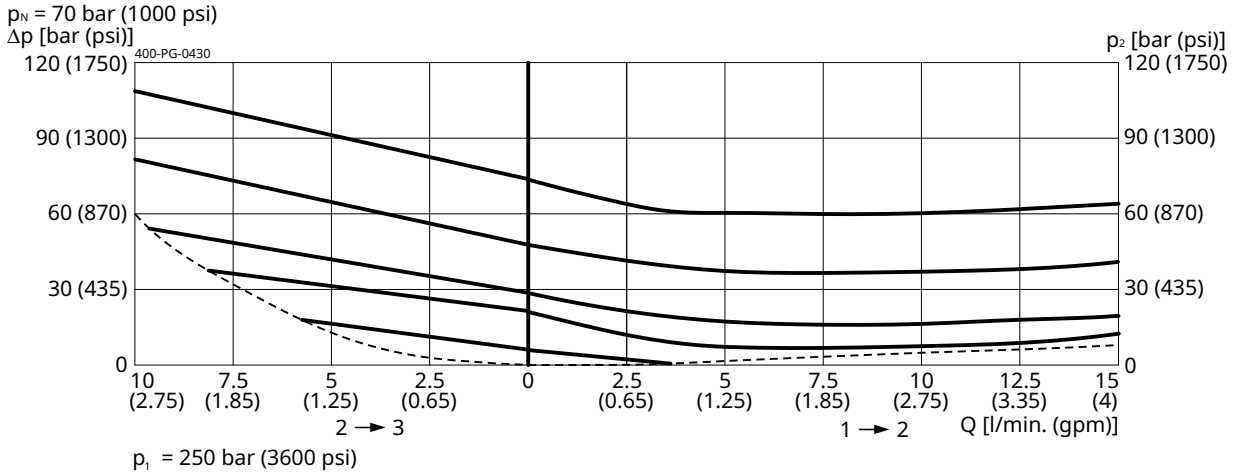

p_1 = 250 bar (3600 psi)

p = f (Q) Pressure-flow rate

p_N = 45 bar (650 psi)

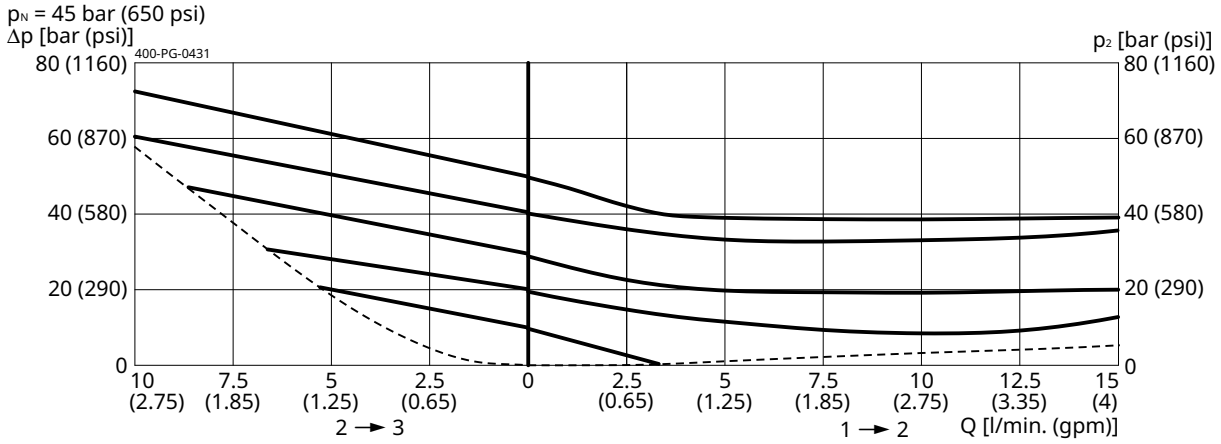

p_1 = 250 bar (3600 psi)

Installation

Beispiel für die Masseinheit:
Exampel for the dimensional units:

0.79	= 0.79 mm	millimeter
(.031)	= 0.031"	inch

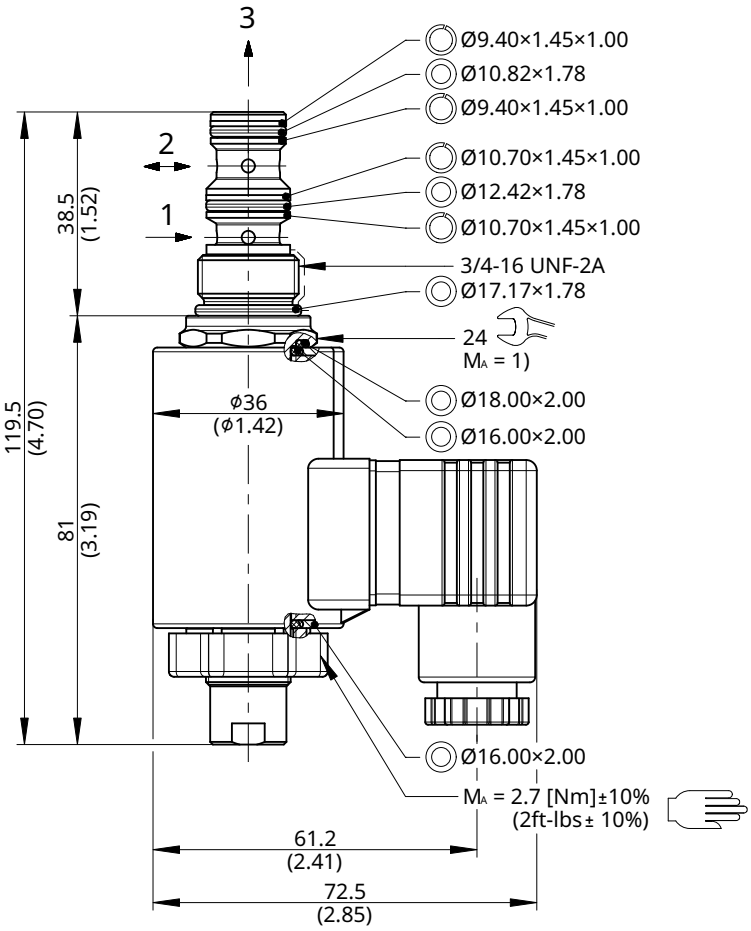

NOTE!
1) When fitting the screw-in cartridge valve, use the specified tightening torque. The value can be found in the chapter "Technical data".

IMPORTANT!
To achieve the screw-in valve's maximum performance rating, fit the solenoid coil as shown (with the plug pins nearest the knurled nut). The valve must be installed in a steel body.

NOTE!
The seals are not available individually. The seal kit order number can be found in the chapter "Technical data".

ATTENTION!
Only qualified personnel with mechanical skills may carry out any maintenance work. Generally, the only work that should ever be undertaken is to check, and possibly replace, the seals. When changing seals, oil or grease the new seals thoroughly before fitting them.

Ordering code

Ex. DR D S A - 7 M Q - 070 - 5 _ - O - 1 24 D _

DR	=	Pressure reducing cartridge
D	=	Direct operated
S	=	Electrohydraulically actuated, D36, 6W, 8 W, proportional
A ... Q	=	**Standard** modifications according to valid data sheet
Z ... R	=	**Special**-Ausführungen (auf Anfrage)
7	=	Pressure reducing valve with fixed pressure relief
M	=	Cavity type AM
Q	=	special volume flow direction, reduced pressure port 2
045	=	Pressure range 45 bar / ...650 psi
070	=	Pressure range 70 bar / ...1000 psi
5	=	Nominal size 5
(blank)	=	NBR (Nitril-Butadien-Kautschuk / BUNA N) **(Standard)**
V	=	FKM (Fluor-Kautschuk / VITON) Dichtungen **(Special**-Dichtungen auf Anfrage)
O	=	ohne Handbetätigung **(Standard)**
1 ... 9	=	Technische Stand (einstellbar bei Bestellung)
...	=	Spannungsart (24 V) 24 (24 V)
D	=	Strom DC
(blank)	=	DIN EN 175301-803 Anschluss 3-polig 2P+E **(Standard)** (IP 65) mit Gegenstecker
T	=	DIN EN 175301-803 Anschluss 3-polig 2P+E, mit Schutzdiode (IP 65) mit Gegenstecker
M100	=	DIN EN 175301-803 Anschluss 3-polig 2P+E (IP 65)
J	=	Junior-Timer-Steckeranschluss 2-polig radial (IP 65)
JT	=	Junior-Timer-Steckeranschluss 2-polig radial, mit Schutzdiode (IP 65)
I	=	Junior-Timer-Steckeranschluss 2-polig axial (IP 65)
IT	=	Junior-Timer-Steckeranschluss 2-polig axial, mit Schutzdiode (IP 65)
D	=	Deutsch-Steckeranschluss DT04-2P 2-polig 45° (IP 67/69K)
DT	=	Deutsch-Steckeranschluss DT04-2P 2-polig 45°, mit Schutzdiode (IP 67/69K)
		Weitere Steckeranschlüsse auf Anfrage.

mating plug ohne Gegenstecker not supplied

IMPORTANT!
Not every combination of specified values, current, type and plug connection is available.
Nicht jede Kombination von Spannungswerten, Strom und Steckeranschlussvarianten erhältlich.

Related data sheets

Reference	Description
400-P-040011	form tools
400-P-040181	cavity AM
400-P-120110	solenoid coil D36
400-P-720111	threaded port body GAMA

info.ch@bucherhydraulics.com www.bucherhydraulics.com

© 2026 by Bucher Hydraulics AG Frutigen, 3714 Frutigen, Switzerland

All rights reserved.
Data is provided for the purpose of product description only, and must not be construed as warranted characteristics in the legal sense. The information does not relieve users from the duty of conducting their own evaluations and tests. Because the products are subject to continual improvement, we reserve the right to amend the product specifications contained in this catalogue.

WWW.SUMY.IR

Pressure valve
Reducing function

Q_{max} = 20 l/min, p_{max} = 210 bar
Direct acting, spool type, proportional solenoid
Type series: DDRRY-7...

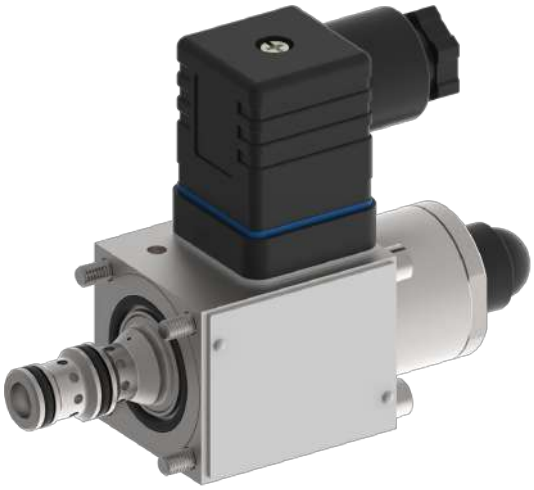

- Slip-in cartridge valve for cavity AG
- All external parts with zinc-nickel plating according to DIN EN ISO 19598
- Installation in threaded port body type GAAA
- Excellent stability over the whole pressure and flow range
- Operated by a proportional solenoid
- High pressure wet-armature solenoids
- Various plug-connector systems and voltages are available

Symbol

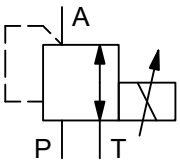

Description

Series DDRRY-7_... proportional 3-way pressure-reducing valves are direct acting, spool-type, push-in cartridges and are size 4. They reduce the outlet pressure in A as a function of the control current signal and independently of the inlet pressure in P. In the initial position (solenoid de-energized) the inlet of the 3-way pressure-reducing cartridge is shut off and the outlet is connected to tank (port A to T). In control mode, the connection P to A opens until the pressure in port A reaches the preset level. If the pressure rises above the preset level, the control spool opens the A to T connection until balance is attained. Four pressure ranges are available, with maximum operating pressure (inlet pressure) pmax 210 bar. All external parts of the cartridge are zinc-nickel plated and are thus suitable for use in the harshest operating environments. These 3-way pressure-reducing valves are predominantly used for reducing a system pressure in

mobile and industrial applications. They are suitable for controlling larger directional valves, where they can be incorporated in the valve body or directly in the end covers, for example, and for controlling pumps and motors. For self-assembly, please refer to the section related data sheets.

Technical data

General characteristics	Description, value, unit
Function group	pressure valve
Function	reducing function
Design	slip-in cartridge valve
Controls	proportional solenoid
Characteristic	direct acting, spool type
MTTFd value	150 years
Construction size	NG 04
Mounting attitude	unrestricted (preferably vertical, coil down)
Weight	0.55 kg
Cavity acc. factory standard	AG
Tightening torque steel	2.6 Nm
Tightening torque aluminium	2.6 Nm
Tightening torque tolerance	± 10 %
Minimum ambient temperature	- 30 °C
Maximum ambient temperature	+ 50 °C
Surface protection	all external parts with zinc-nickel plating according to DIN EN ISO 19598
Seal kit order number	NBR: DS-154-N / FKM: DS-154-V

Hydraulic characteristics	Description, value, unit
Maximum operating pressure	210 bar
Maximum flow rate	20 l/min
Flow direction	see symbol
Hydraulic fluid	HL and HLP mineral oil according to DIN 51 524; other fluids on request!
Minimum fluid temperature	- 30 °C
Maximum fluid temperature	+ 70 °C
Viscosity range	15 ... 380 mm^2/s (cSt)
Recommended viscosity range	20 ... 130 mm^2/s (cSt)
Minimum fluid cleanliness (cleanliness class according to ISO 4406:1999)	class 18/16/13
Nominal pressure range	nominal pressure range 020: ...20 bar nominal pressure range 030: ...30 bar nominal pressure range 050: ...50 bar nominal pressure range 100: ...100 bar

Electric characteristics	Description, value, unit
Supply voltage DC	12 V DC 24 V DC
Control current	12 V = 0...1400 mA 24 V = 0...800 mA
Nominal power consumption	max. 19 W
Relative duty cycle	100 %
Coil resistance R	cold value at 20 °C = 12 V = 6.4 Ω / 24 V = 17.2 Ω cold value at -25 °C = 12 V = 5.2 Ω / 24 V = 14.1 Ω max. warm value = 12 V = 10.0 Ω / 24 V = 27.0 Ω
Recommended PWM frequency	200 Hz
Response sensitivity with PWM	< 1 % I_{max}
Reproducibility with PWM	< 2 % Q_{nenn}
Hysteresis with PWM	2...4 % I_{max}
Reversal error with PWM	2...4 % I_{max}
Electrical connection coil	DIN EN 175301-803, 3-pole 2 P+E (IP 65)
Protection class solenoid coil to ISO 20 653 / EN 60 529	IP 65 / IP 67 / IP 69K, see Ordering code (with appropriate mating connector and proper fitting and sealing)

Performance graphs

measured with oil viscosity 33.0 mm²/s (cSt)

p = f (I) Pressure adjustment

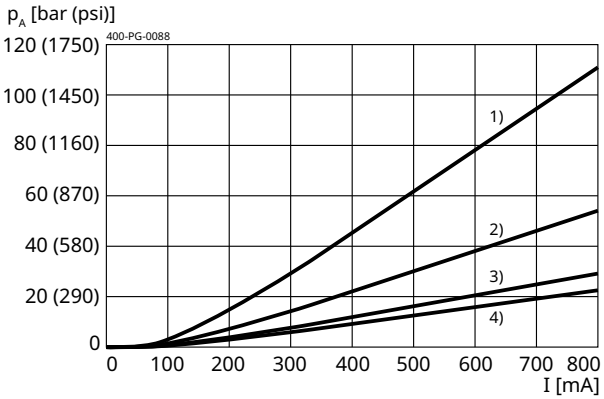

1) p_N 100 bar (1450 psi)
2) p_N 50 bar (725 psi)
3) p_N 30 bar (435 psi)
4) p_N 20 bar 290 psi)

p = f (I) Pressure adjustment

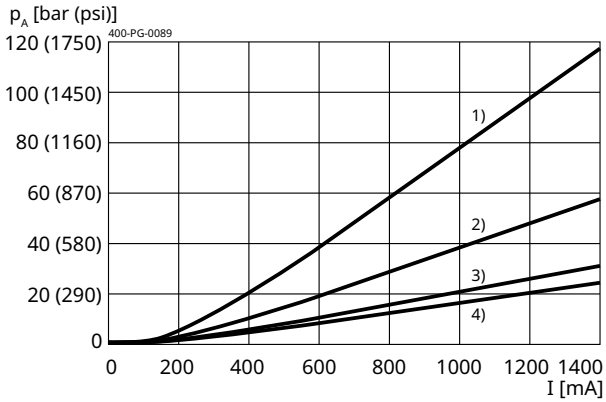

1) p_N 100 bar (1450 psi)
2) p_N 50 bar (725 psi)
3) p_N 30 bar (435 psi)
4) p_N 20 bar (290 psi)

p = f (Q) Pressure-flow rate

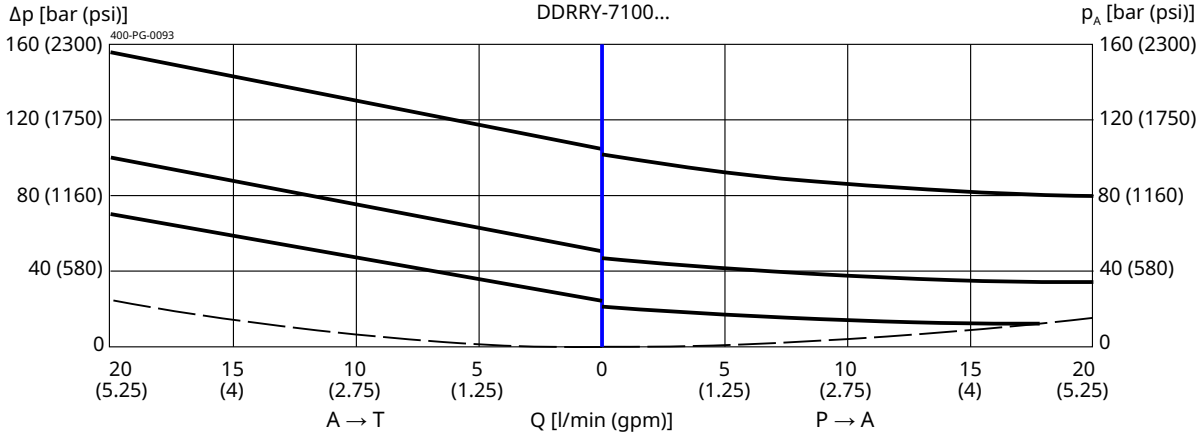

p = f (Q) Pressure-flow rate

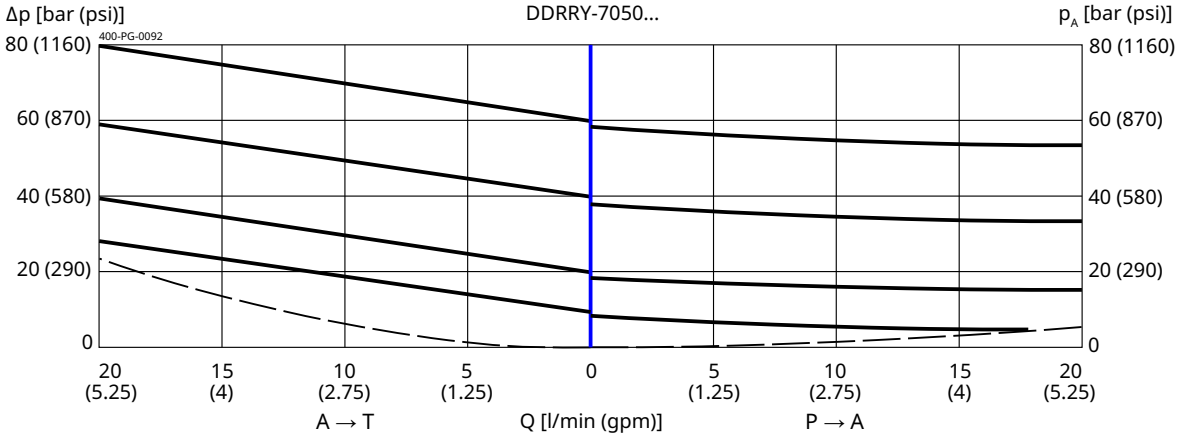

p = f (Q) Pressure-flow rate

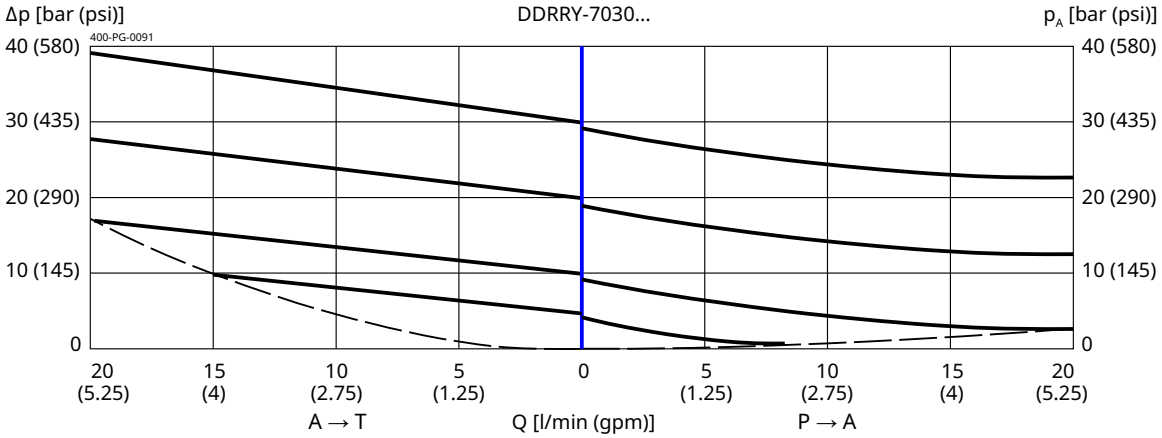

WWW.SUMY.IR

p = f (Q) Pressure-flow rate

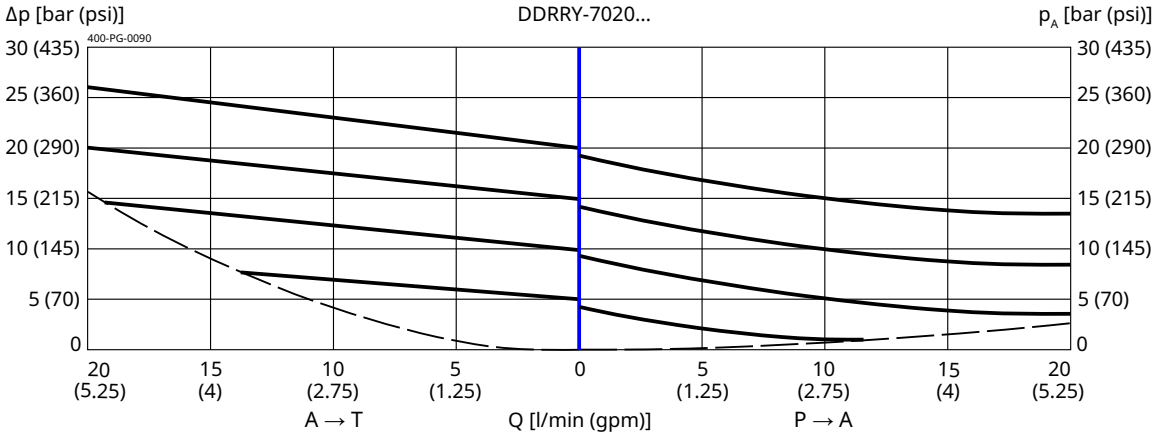

Installation

Beispiel für die Masseinheit:
Example for the dimensional units:

0.79 = 0.79 mm millimeter
(.031) = 0.031'' inch

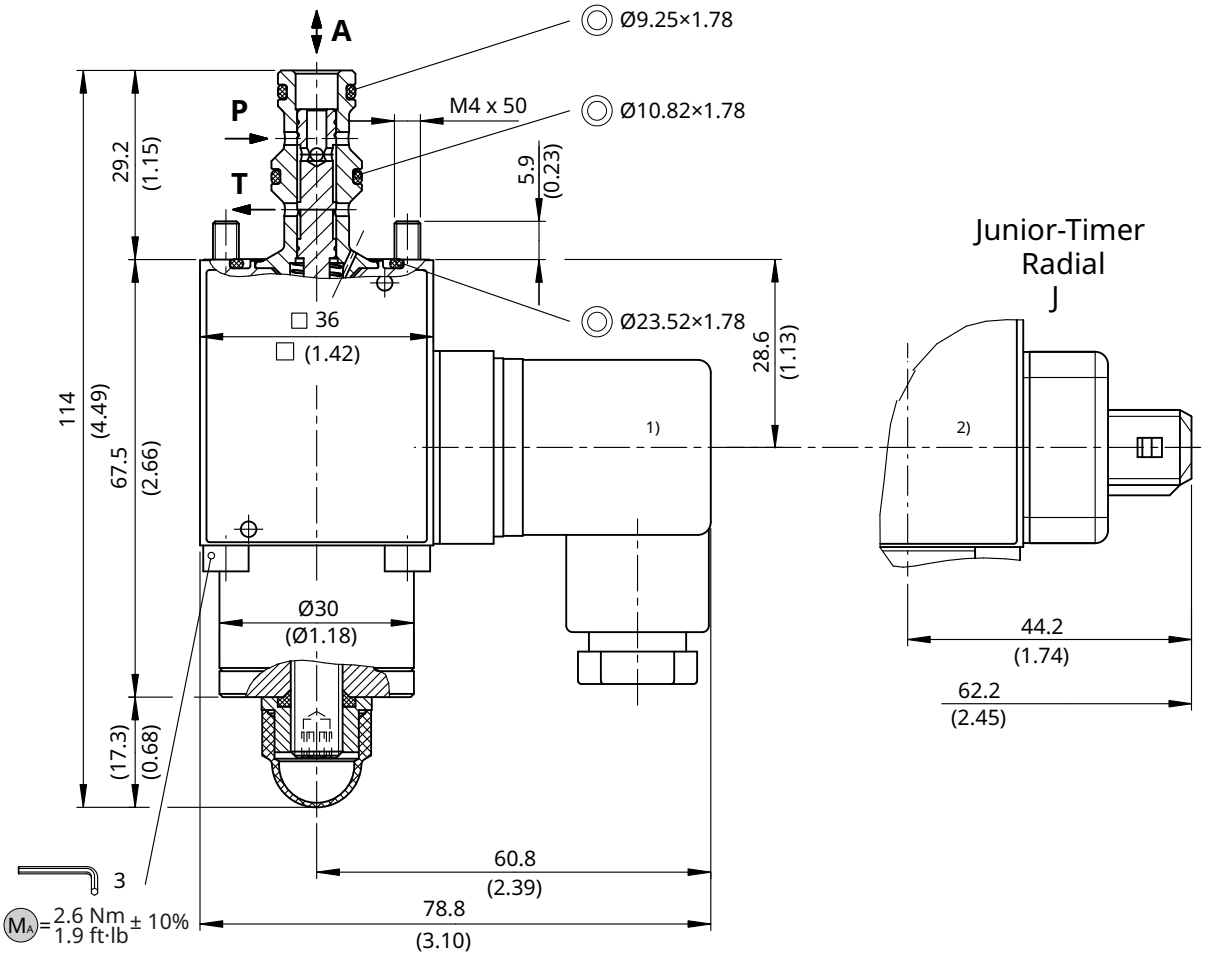

[1] Gegenstecker nach ISO 4400 / DIN 43 650 / ISO 4400 / DIN 43 650 mating plug connection
[2] Junior-Timer-Radialstecker-Anschluss / Junior Timer Radial plug connection

NOTE!
- Observe tightening torque M_A.
- Mount the valve preferably suspended (automatic air bleed).
- The valve is factory-set, no further adjustments are necessary.

ATTENTION!
Only qualified personnel with mechanical skills may carry out the following work:
- installation and, if necessary, adjustment.
- inspection and, if necessary, replacement of the seals shown in the illustration. New seals must only be installed after being oiled or greased (seal kit; see "Technical Data").

Ordering code

Ex. DDR R Y - 7 020 - 4 - _ - 2 24 D _

DDR	=	pressure-reducing cartridge, direct acting
R	=	electrically operated, ☐36, proportional solenoid
A ...Q	=	standard model according to valid data sheet
Y ... R	=	special model (on request)
7	=	3-way pressure-reducing
020	=	pressure range ... 11 bar
030	=	pressure range ... 20 bar
050	=	pressure range ... 30 bar
100	=	pressure range ... 40 bar
4	=	nominal size 4
(blank)	=	NBR (nitril-butadien-rubber / BUNA) seals **(standard)**
V	=	FKM (fluorocarbon rubber / VITON) seals (special seals on request)
1...9	=	technical design no. (omit by ordering)
...	=	voltage e.g. 24 (24 V)
D	=	current DC

(blank)	=	DIN EN 175301-803 connection	3-pole 2 P+E **(standard)**	(IP 65)	with mating plug
M100	=	DIN EN 175301-803 connection	3-pole 2 P+E	(IP 65)	mating plug not supplied
J	=	Junior Timer plug connection	2-pole radial	(IP 65)	mating plug not supplied
D	=	Deutsch plug connection DT04-2P	2-pole 45°	(IP 67/69K)	mating plug not supplied
		other plug-variants, please consult BUCHER.			

IMPORTANT!
Not every combination of voltage values, current type and plug connections vailable.

Related data sheets

Reference	Description
400-P-040011	form tools
400-P-010101	MTTFd Values for Hydraulic Valves
400-P-040141	cavity AG
400-P-712101	threaded port body GAAA

info.ch@bucherhydraulics.com **www.bucherhydraulics.com**

© 2026 by Bucher Hydraulics AG Frutigen, 3714 Frutigen, Switzerland

All rights reserved.
Data is provided for the purpose of product description only, and must not be construed as warranted characteristics in the legal sense. The information does not relieve users from the duty of conducting their own evaluations and tests. Because the products are subject to continual improvement, we reserve the right to amend the product specifications contained in this catalogue.

Prop. Pressure-Reducing/Relieving Cartridge, Size SAE 08

Q_{max} = 7.0 gpm [26 l/min], p_{max} = 3400 psi [240 bar]
Seated pilot, spool-type main stage
Series EPRT-08…

- Compact construction for cavity types: C0830 - 3/4-16 UNF
- Operated by a proportional solenoid
- 3 pressure ranges available
- Full-flow secondary pressure relief
- Internal pilot-oil drain
- Pilot stage protected from dirt by gap filter
- Excellent stability over the whole pressure and flow range
- All exposed parts with zinc-nickel plating
- High pressure wet-armature solenoids
- The slip-on coil can be rotated, and it can be replaced without opening the hydraulic envelope
- Various plug-connector systems and voltages are available
- Can be fitted in a line-mounting body

1 Description

Series EPRT-08… proportional pressure-reducing / relieving valves are size SAE 08, high performance screw-in cartridges with a 3/4-16 UNF mounting thread. Using the leak-free seat-type pilot cartridge, the secondary pressure in port 1 is dependent on the electrical control signal and it can be continuously varied and set at any desired level. In control mode, the connection 2 → 1 opens until the pressure in port 1 reaches the preset level. If the pressure rises above the preset level, the control spool opens the 1 → 3 connection until balance is attained. These pressure-reducing / relieving cartridges function as full-flow pressure relief valves from port 1 → 3 as soon as the reduced pressure rises above the valve pressure setting. A high degree of functional stability is reached even if the back pressure in the tank line fluctuates. Three pressure ranges are available in order to obtain precise pressure settings over the whole pressure range. These pressure-reducing / relieving cartridges are predominantly used in mobile and industrial applications for reducing a system pressure. All external parts of the cartridge are zinc-nickel plated according to DIN EN ISO 19 598 and are thus suitable for use in the harshest operating environments. The slip-on coils can be replaced without opening the hydraulic envelope and can be positioned at any angle through 360°. For self-assembly, please refer to the section related data sheets.

2 Symbol

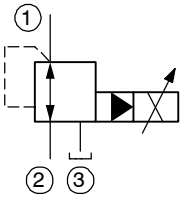

3 Technical data

General characteristics	Description, value, unit
Designation	proportional pressure-reducing / relieving cartridge
Design	seated pilot, spool-type main stage
Mounting method	screw-in cartridge 3/4-16 UNF-2A
Tightening torque	30 ft-lbs ± 10 % [40 Nm ± 10 %]

General characteristics	Description, value, unit	
Size	size SAE 08 for cavity type C0830 fits common cavity ISO 17209: 3/4-03-0-13 fits common cavity NFPA/T3.5.50: 0.750-03-0-09	
Weight	0.93 lbs	[0.42 kg]
Mounting attitude	unrestricted (preferably vertical, coil down)	
Ambient temperature range	-13 °F … +122 °F	[-25 °C … +50 °C]

Hydraulic characteristics		Description, value, unit	
Maximum operating pressure	- ports 1, 2 - port 3	3400 psi 3000 psi	[240 bar] [210 bar] 1)
Maximum flow rate		7 gpm	[26 l/min]
Nominal pressure ranges		1500, 2500, 3000 psi For further pressure ranges, please contact BUCHER	[100, 175, 210 bar]
Pilot-oil consumption		0.05… 0.08 gpm	[0,2 … 0,3 l/min]
Flow direction		2 → 1 pressure reducing 1 → 3 pressure relieving	
Hydraulic fluid		HL and HLP mineral oil to DIN 51 524; for other fluids, please contact BUCHER	
Hydraulic fluid temperature range		-13 °F … +158 °F	[-25 °C … +70 °C]
Viscosity range		15…380 mm^2/s (cSt), recommended 20...130 mm^2/s (cSt)	
Minimum fluid cleanliness Cleanliness class to ISO 4406 : 1999		class 18/16/13	

ATTENTION!
1) To prevent any pressure surges, port 3 must be routed to tank with the least possible back-pressure.

Electrical characteristics		Description, value, unit
Supply voltage		12 V DC, 24 V DC
Supply voltage tolerance		± 10 %
Control current		12 V = 0…1400 mA, 24 V = 0…750 mA
Power consumption at max. control current		max. 19 W
Coil resistance R	- cold value at 20 °C - max. warm value	12 V = 5.8 Ω / 24 V = 21 Ω 12 V = 8.6 Ω / 24 V = 32 Ω
Recommended PWM frequency (dither)		200 Hz
Hysteresis with PWM		2…4 % I_N
Reversal error with PWM		1…3 % I_N
Sensitivity with PWM		≤ 1 % I_N
Reproducibility with PWM		< 2 % p_N

Electrical characteristics	Description, value, unit
Switching time	*Pressure-reducing function*: 38 … 45 ms (solenoid ON) 8 … 12 ms (solenoid OFF) *Pressure-relief function:* 41 … 51 ms (solenoid ON) 6 … 12 ms (solenoid OFF) The switching times are strongly influenced by flow rate, pressure, viscosity and the dwell period under pressure.
Relative duty cycle	100 %
Protection class to ISO 20 653 / EN 60 529	IP 65 / IP 67 / IP 69K, see “Ordering code” (with appropriate mating connector and proper fitting and sealing)
Electrical connection	DIN EN 175301-803, 3-pin 2 P+E (standard) for other connectors, see “Ordering code”

4 Performance graphs measured with oil viscosity 33 mm²/s (cSt)

p = f (I) Pressure adjustment characteristic

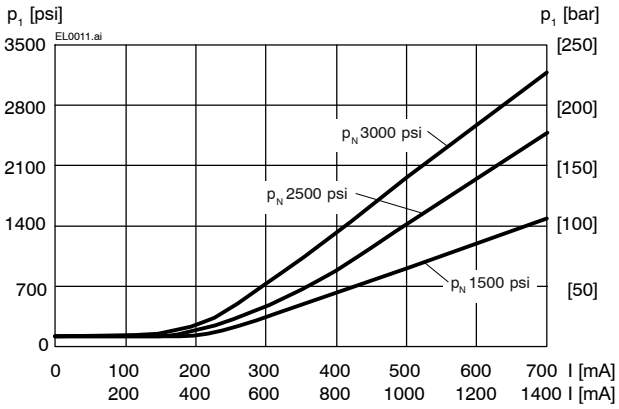

WWW.SUMY.IR

p = f (Q) Pressure - Flow rate characteristic [p_N = 3000 psi]

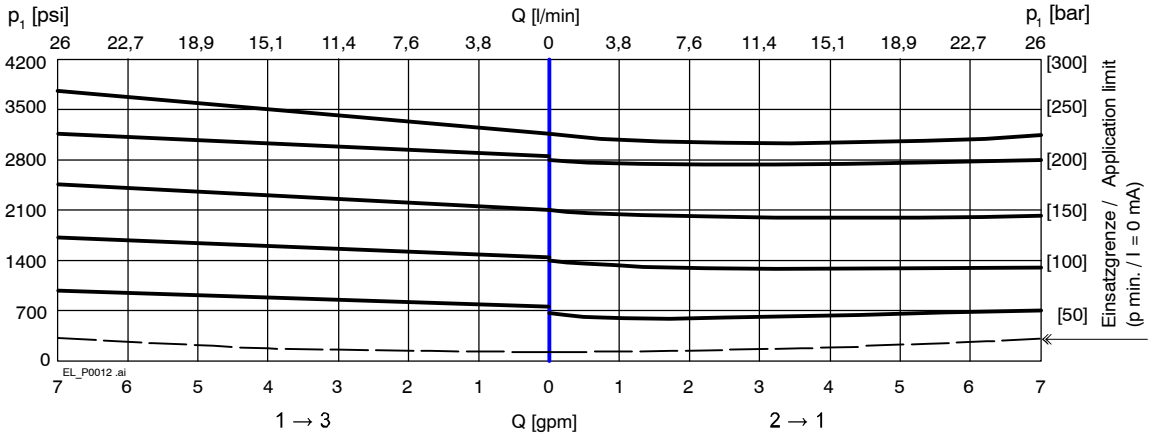

p = f (Q) Pressure - Flow rate characteristic [p_N = 2500 psi]

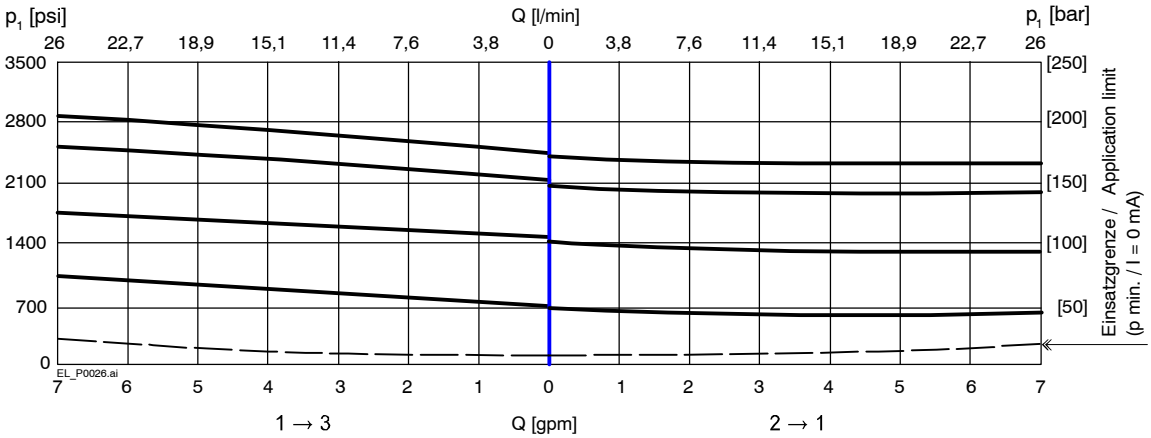

p = f (Q) Pressure - Flow rate characteristic [p_N = 1500 psi]

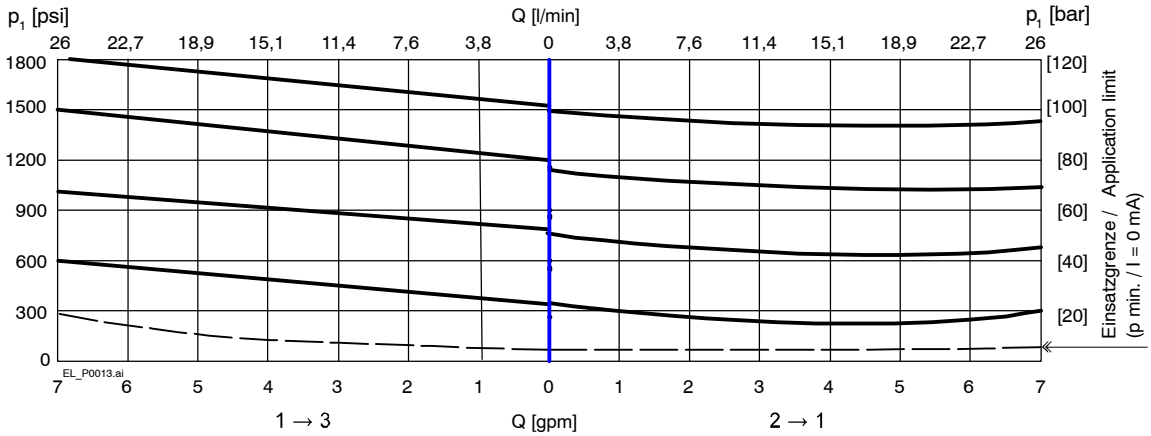

5 Dimensions & sectional view

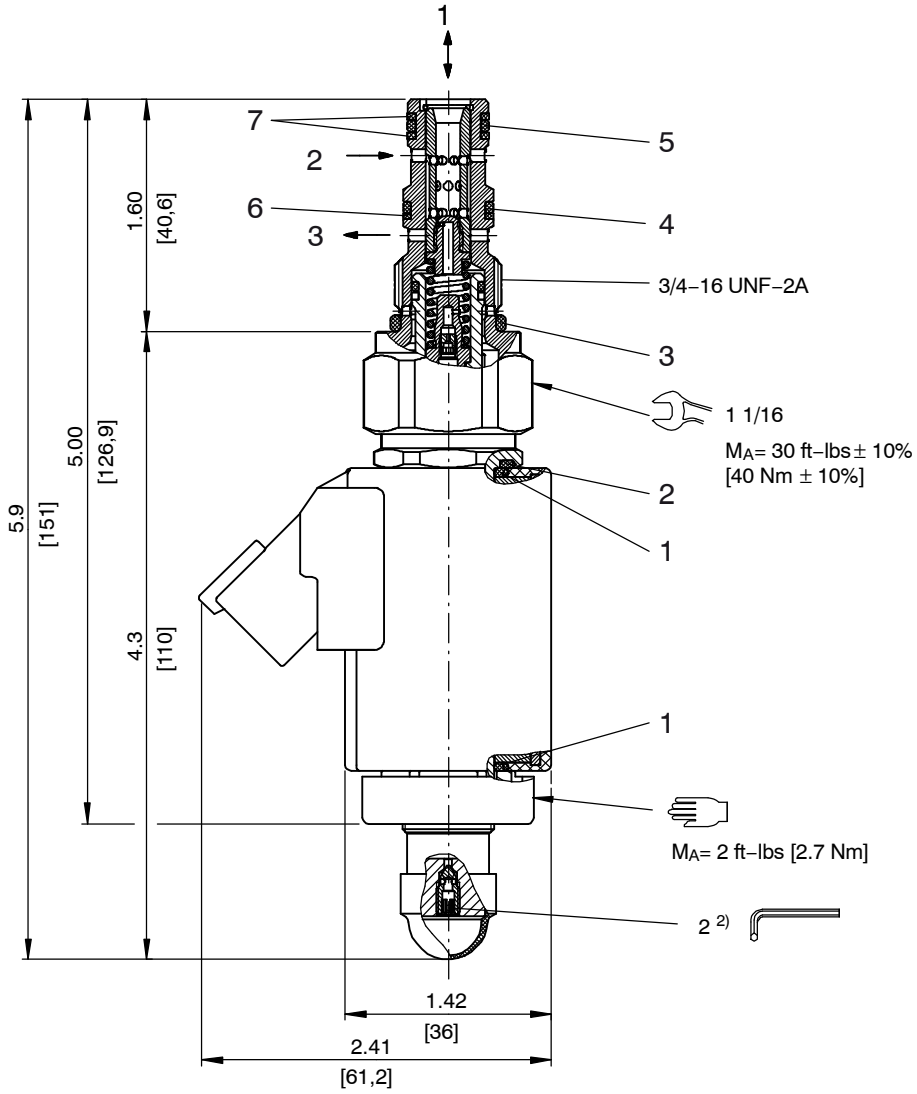

6 Installation information

IMPORTANT!
To achieve the proportional pressure-reducing cartridge's maximum performance rating, fit the solenoid coil as shown (with the plug pins at the bottom). When fitting the cartridges, note the mounting attitude (preferably vertical, with coil down → automatic air bleed) and use the specified tightening torque. No adjustments are necessary, since the cartridges are set in the factory.

ATTENTION!
Only qualified personnel with mechanical skills may carry out any maintenance work. Generally, the only work that should ever be undertaken is to check, and possibly replace, the seals. When changing seals, oil or grease the new seals thoroughly before fitting them.

Seal kit NBR no. SKN-0832-12-S1 1)

Item	Qty.	Description				
1	2	O-ring		∅ 16,00 x 2,00	FKM	mm
2	1	O-ring		∅ 18,00 x 2,00	FKM	mm
3	1	O-ring	no. 908	∅ 0,644 x 0,087	N70	Inch
4	1	O-ring	no. 014	∅ 0,489 x 0,070	N70	Inch
5	2	O-ring	no. 013	∅ 0,426 x 0,070	N70	Inch
6	1	Backup ring FI0751		∅ 0,421 x 0,057 x 0,039		Inch
7	2	Backup ring FI0751		∅ 0,370 x 0,057 x 0,039		Inch

IMPORTANT!
1) Seal kit with FKM (Viton) seals, no. SKV-0832-12-S1
2) vent screw to vent valve when mounted coil up screw torqued hand tight.

7 Ordering code

Ex. EPRT - 08 - N - 30 - 0 - 24 D _

EPRT	=	prop. pressure-reducing / relieving valve, two stage
08	=	nominal size SAE 08
N	=	NBR (Nitrile) seals (**standard**)
V	=	FKM (Viton) seals (special seals - please contact BUCHER)
30	=	Pressure option 3000 psi
25	=	Pressure option 2500 psi
15	=	Pressure option 1500 psi
0	=	cartridge only
02BA	=	line-mounting body G1/4 BSPP aluminum
02BS	=	line-mounting body G1/4 BSPP steel
03BA	=	line-mounting body G3/8 BSPP aluminum
03BS	=	line-mounting body G3/8 BSPP steel
06TA	=	line-mounting body SAE-6 aluminum
06TS	=	line-mounting body SAE-6 steel
...	=	voltage e.g. **24** (24 V)
D	=	current DC
(blank)	=	DIN EN 175301-803 connection with mating plug (**standard, IP 65**)
M100	=	DIN EN 175301-803 connection without mating plug
C	=	Kostal plug connection (IP 65)
JT	=	Junior Timer radial plug connection (with protection diode, IP65)
IT	=	Junior Timer axial plug connection (with protection diode, IP65)
D	=	Deutsch plug connection 45° DT04-2P (IP67/69K)
DT	=	Deutsch plug connection 45° DT04-2P (with protection diode, IP67/69K)
S	=	AMP Superseal 1.5 (IP67) / Metri-Pack 150 (IP65) plug connection
F	=	flying leads (500 mm)

on request

mating plug not supplied

8 Related data sheets

Reference	(Old no.)	Description
520-P-000050		The form-tool loan program
520-P-000310	(0-031.0)	Cavity type C0830
400-P-120110	(W-2.141)	Coils for screw-in cartridge valves
520-P-000311	(0-031.1)	Line-mounting body, 8 Series -3-way

info.el@bucherhydraulics.com www.bucherhydraulics.com/commoncavity

© 2021 by Bucher Hydraulics, Inc., 2545 Northwest Parkway, Elgin, Illinois 60124, USA
All rights reserved.
Data is provided for the purpose of product description only, and must not be construed as warranted characteristics in the legal sense. The information does not relieve users from the duty of conducting their own evaluations and tests. Because the products are subject to continual improvement, we reserve the right to amend the product specifications contained in this catalogue.

Classification: 430.300.305.305.320.310

BUCHER hydraulics
WWW.SUMY.IR

General information
Cavity

Type series: DP

Dimensions and sectional view

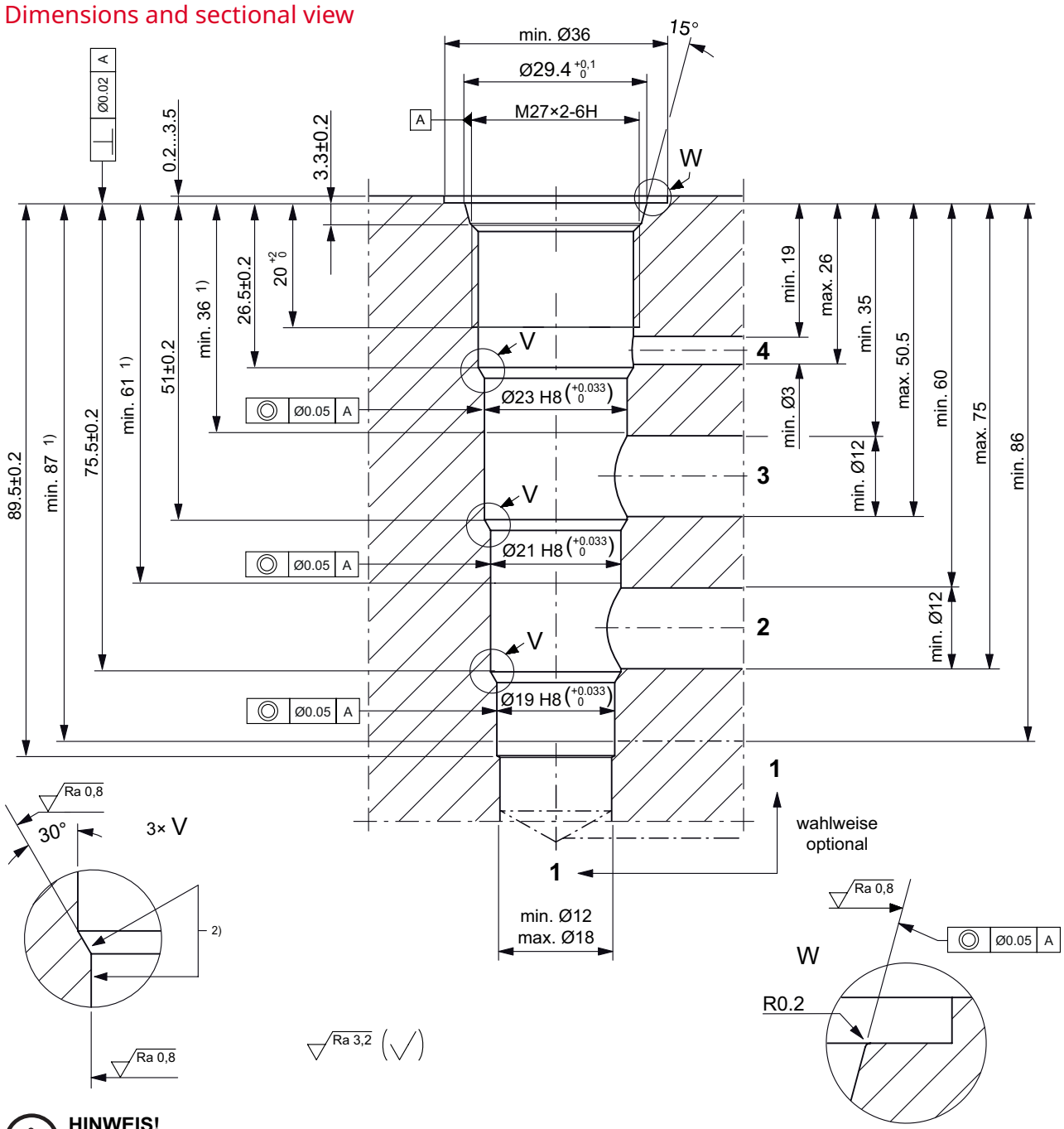

HINWEIS!
NOTE!

1) Passungstiefe
Minimum depth of specified diametral tolerance

2) Der Gewindeauslauf darf die Ringfläche und Ø23 H8 nicht verletzen.
The thread runout must not damage the ring surface or the Ø23 H8.

Beispiel für die Masseinheit:
Example for the dimensional units:
0.79 = 0.79 mm millimeter

Installation information

ATTENTION!
You must maintain the specified positional and diametral tolerances. To ensure trouble-free operation of the screw-in cartridges, we strongly recommend that pilot drilling, boring, reaming and cavity thread-cutting are always performed in one setup.

NOTE!
The cavity type DP complies with the standard according to ISO 7789: 27-09-0-07.

NOTE!
We offer form tool sets for sale or hire. For further information, see data sheet 400-P-040011.

info.ch@bucherhydraulics.com **www.bucherhydraulics.com**

© 2023 by Bucher Hydraulics AG Frutigen, 3714 Frutigen, Switzerland

All rights reserved.
Data is provided for the purpose of product description only, and must not be construed as warranted characteristics in the legal sense. The information does not relieve users from the duty of conducting their own evaluations and tests. Because the products are subject to continual improvement, we reserve the right to amend the product specifications contained in this catalogue.

Prop. 3-Way Pressure-Reducing Cartridge, Size 10

Q_{max} = 120 l/min (31 gpm), p_{max} = 350 bar (5000 psi)
Seated pilot, spool-type main stage
Series DRVSA-7P…

- Compact construction for cavity type DP to ISO 7789-27-09-0-07
- Operated by a proportional solenoid
- 4 pressure ranges available
- Full-flow secondary pressure relief
- External pilot-oil drain
- Excellent stability over the whole pressure and flow range
- All exposed parts with zinc-nickel plating
- High pressure wet-armature solenoids
- The slip-on coil can be rotated, and it can be replaced without opening the hydraulic envelope
- Various plug-connector systems and voltages are available
- Can be fitted in a line-mounting body
- Can be fitted in sandwich bodies

1 Description

Series DRVSA-7P… proportional 3-way pressure-reducing valves are size 10, high performance screw-in cartridges with an M27 x 2 mounting thread. Using the leak-free seat-type pilot cartridge, the secondary pressure in port 1 is dependent on the electrical control signal and it can be continuously varied and set at any desired level. In control mode, the connection 2 → 1 opens until the pressure in port 1 reaches the preset level. If the pressure rises above the preset level, the control spool opens the 1 → 3 connection until balance is attained. These 3-way pressure-reducing cartridges function as full-flow pressure relief valves from port 1 → 3 as soon as the reduced pressure rises above the valve pressure setting. Four spring ranges are available in order to obtain precise pressure settings over the whole of the required pressure range. To achieve a high degree of functional stability in systems that are susceptible to oscillation, the pilot drain (port 4) must be routed to tank with the least possible back-pressure. These 3-way pressure-reducing cartridges are predominantly used in mobile and industrial applications for reducing a system pressure. All external parts of the cartridge are zinc-nickel plated according to DIN EN ISO 19 598 and are thus suitable for use in the harshest operating environments. The slip-on coils can be replaced without opening the hydraulic envelope and can be positioned at any angle through 360°. For self-assembly, please refer to the section related data sheets.

2 Symbol

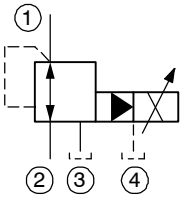

3 Technical data

General characteristics	Description, value, unit
Designation	proportional 3-way pressure-reducing cartridge
Design	seated pilot, spool-type main stage
Mounting method	screw-in cartridge M27 x 2
Tightening torque	80 Nm ± 10 % (60 ft-lbs ± 10 %)

WWW.SUMY.IR

General characteristics	Description, value, unit
Size	nominal size 10, cavity type DP
Weight	0.60 kg (1.32 lbs)
Mounting attitude	unrestricted (preferably vertical, coil down)
Ambient temperature range	-25 °C … +50 °C (-13 °F … +122 °F)

Hydraulic characteristics	Description, value, unit
Maximum operating pressure - ports 1, 2, 3 - port 4	350 bar (5000 psi) 250 bar (3600 psi) [1)]
Maximum flow rate	120 l/min (31 gpm)
Nominal pressure ranges	100 bar, 160 bar, 250 bar, 350 bar (1400 gpm, 2300 gpm, 3600 gpm, 5000 gpm)
Pilot-oil consumption	0.3 … 0.5 l/min (0.075 … 0.125 gpm)
Flow direction	see symbol
Hydraulic fluid	HL and HLP mineral oil to DIN 51 524; for other fluids, please contact BUCHER
Hydraulic fluid temperature range	-25 °C … +70 °C (-13 °F … +158 °F)
Viscosity range	15…380 mm^2/s (cSt), recommended 20...130 mm^2/s (cSt)
Minimum fluid cleanliness Cleanliness class to ISO 4406 : 1999	class 18/16/13

ATTENTION!
1) To prevent any pressure surges, port 4 must be routed to tank with the least possible back-pressure.

Electrical characteristics	Description, value, unit
Supply voltage	12 V DC, 24 V DC
Supply voltage tolerance	± 10 %
Control current	12 V = 0…1400 mA, 24 V = 0…750 mA
Power consumption at max. control current	max. 19 W
Coil resistance R - cold value at 20 °C - max. warm value	12 V = 5.8 Ω / 24 V = 21 Ω 12 V = 8.6 Ω / 24 V = 32 Ω
Recommended PWM frequency (dither)	200 Hz
Hysteresis with PWM	2…4 % I_N
Reversal error with PWM	1…3 % I_N
Sensitivity with PWM	≤ 1 % I_N
Reproducibility with PWM	< 2 % p_N
Switching time	*Pressure-reducing function*: 20 … 29 ms (Solenoid ON) 12 … 26 ms (Soleboid OFF) *Pressure-relief function:* 24 … 62 ms (Solenoid ON) 15 … 45 ms (Solenoid OFF) The switching times are strongly influenced by flow rate, pressure, viscosity and the dwell period under pressure.
Relative duty cycle	100 %

Electrical characteristics	Description, value, unit
Protection class to ISO 20 653 / EN 60 529	IP 65 / IP 67 / IP 69K, see “Ordering code” (with appropriate mating connector and proper fitting and sealing)
Electrical connection	DIN EN 175301-803, 3-pin 2 P+E (standard) for other connectors, see “Ordering code”

4 Performance graphs

measured with oil viscosity 33 mm^2/s (cSt)

p = f (I) Pressure adjustment characteristic

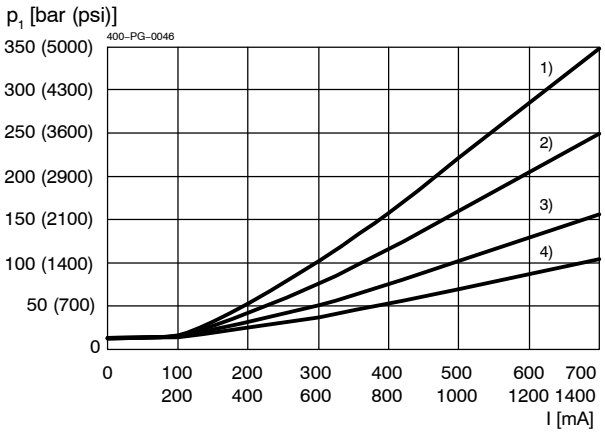

1) p_N 350 bar (5000 psi)
2) p_N 250 bar (3600 psi)
3) p_N 160 bar (2300 psi)
4) p_N 100 bar (1400 psi)

p = f (Q) Pressure - Flow rate characteristic [p_N = 100 bar (1400 psi)]

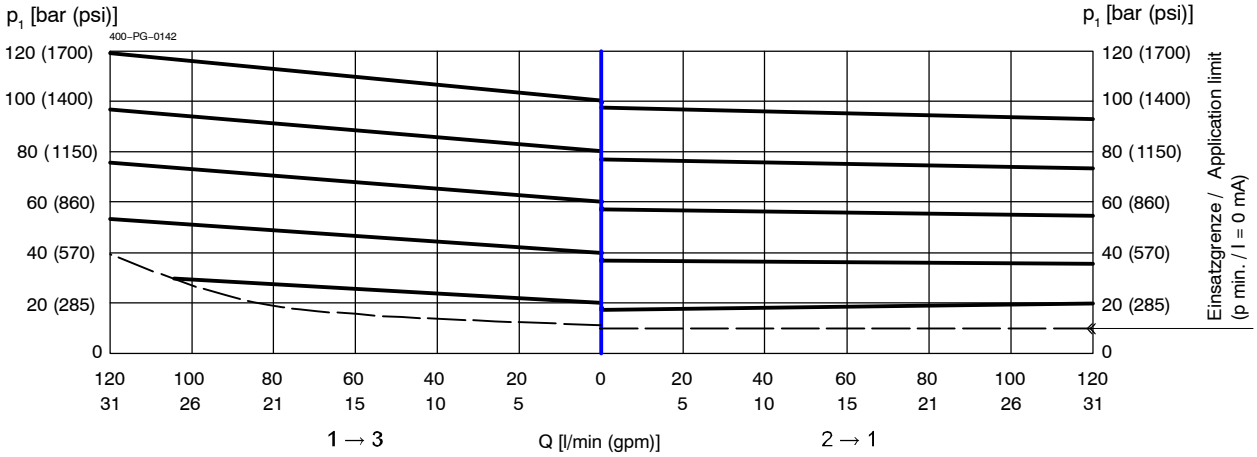

WWW.SUMY.IR

p = f (Q) Pressure - Flow rate characteristic [p_N = 160 bar (2300 psi)]

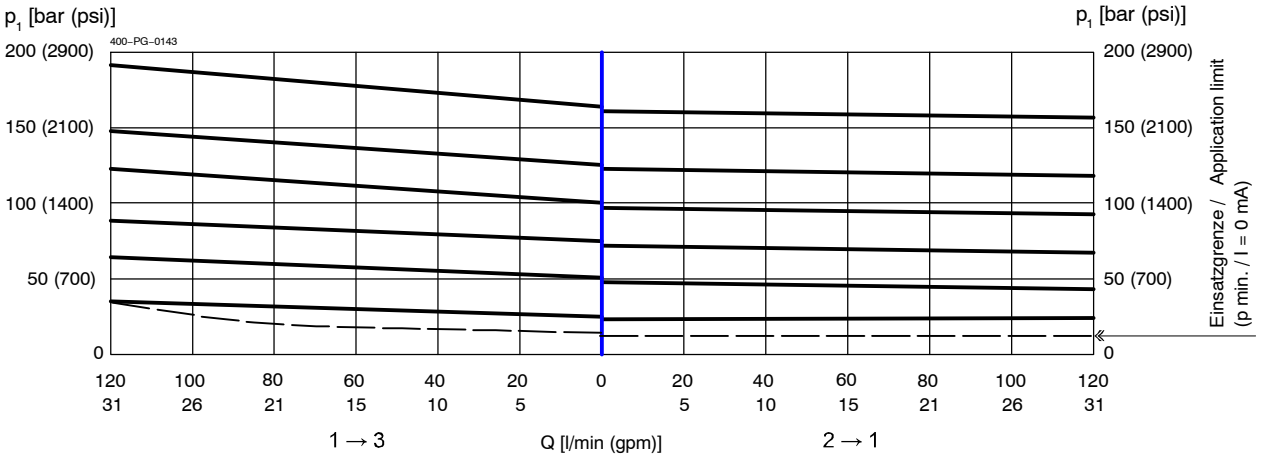

p = f (Q) Pressure - Flow rate characteristic [p_N = 250 bar (2300 psi)]

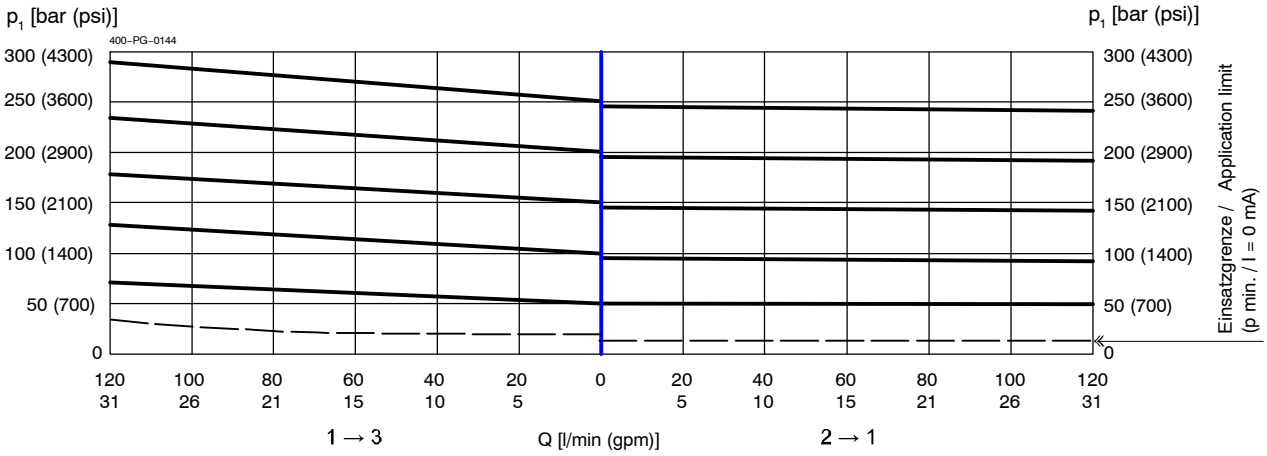

p = f (Q) Pressure - Flow rate characteristic [p_N = 350 bar (5000 psi)]

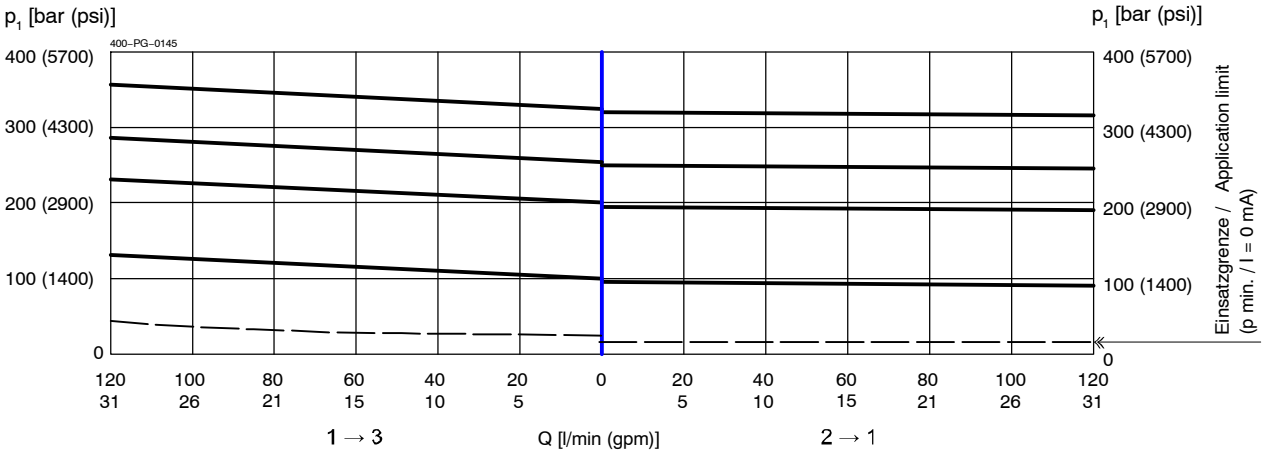

5 Dimensions & sectional view

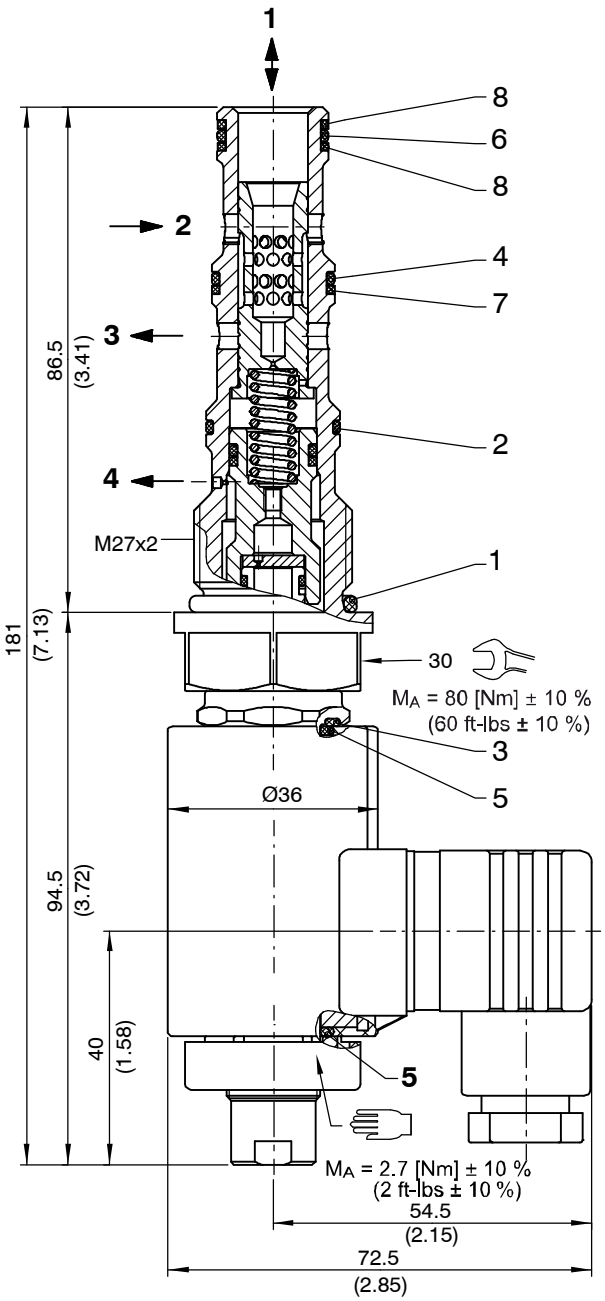

6 Installation information

IMPORTANT!
To achieve the maximum performance rating, fit the solenoid coil as shown (with the plug pins at the bottom) and install the valve in a steel body. When fitting the cartridges, note the mounting attitude (preferably vertical, with coil down → automatic air bleed) and use the specified tightening torque. No adjustments are necessary, since the cartridges are set in the factory.

ATTENTION!
Only qualified personnel with mechanical skills may carry out any maintenance work. Generally, the only work that should ever be undertaken is to check, and possibly replace, the seals. When changing seals, oil or grease the new seals thoroughly before fitting them.

ATTENTION!
To prevent any pressure surges, port 4 must be routed to tank with the least possible back-pressure.

Seal kit NBR no. DS-394-N [1)]

Item	Qty.	Description			
1	1	O-ring	no. 119	∅ 23,47 x 2,62	N90
2	1	O-ring	no. 018	∅ 18,77 x 1,78	N90
3	1	O-ring		∅ 18,00 x 2,00	FKM
4	1	O-ring	no. 017	∅ 17,17 x 1,78	N90
5	2	O-ring		∅ 16,00 x 2,00	FKM
6	1	O-ring	no. 016	∅ 15,60 x 1,78	N90
7	1	Backup ring		∅ 16,60 x 1,30 x 1,40	FI0751
8	2	Backup ring		∅ 14,90 x 1,40 x 1,40	FI0751

IMPORTANT!
1) Seal kit with FKM (Viton) seals, no. DS-394-V

7 Ordering code

Ex. DRV S A - 7 P - 350 - 10 _ - 2 24 D _

DRV	=	pressure-relief cartridge, two stage
S	=	standard solenoid (proportional)
A ... Q	=	standard model - see relevant data sheets
Z ... R	=	special features - please consult BUCHER
7	=	3-way pressure function (external pilot drain)
P	=	cavity type DP to ISO 7789-27-09-0-07
350	=	pressure range …350 bar (5000 psi)
250	=	pressure range …250 bar (3600 psi)
160	=	pressure range …160 bar (2300 psi)
100	=	pressure range …100 bar (1400 psi)
10	=	nominal size 10
(blank)	=	NBR (Nitrile) seals (**standard**)
V	=	FKM (Viton) seals (special seals - please contact BUCHER)
1 ... 9	=	design stage (omit when ordering new units)
...	=	voltage e.g. **24** (24 V)
D	=	current DC
(blank)	=	DIN EN 175301-803 connection with mating plug (**standard, IP 65**)
M100	=	DIN EN 175301-803 connection without mating plug
C	=	Kostal plug connection (IP 65)
JT	=	Junior Timer radial plug connection (with protection diode, IP65)
IT	=	Junior Timer axial plug connection (with protection diode, IP65)
D	=	Deutsch plug connection 45° DT04-2P (IP67/69K)
DT	=	Deutsch plug connection 45° DT04-2P (with protection diode, IP67/69K)
S	=	AMP Superseal 1.5 (IP67) / Metri-Pack 150 (IP65) plug connection
F	=	flying leads (500 mm)

mating plug not supplied

8 Related data sheets

Reference	(Old no.)	Description
400-P-040011	(i-32)	The form-tool hire programme
400-P-060211	(i-45.14)	Cavity type DP
400-P-120110	(W-2.141)	Coils for screw-in cartridge valves
400-P-510101		Amplifier unit for proportional valves (1-channel) PBS - 3A
400-P-595102		Sandwich prop. 3-way presssure-reducing valve, size 6, type SDRVSA-7…
400-P-596101		Sandwich prop. 3-way presssure-reducing valve, size 10, type SDRVSA-7…
400-P-740171		Line-mounting body, type GCPA (G 1/2”)
400-P-740172		Line-mounting body, type GCPAA (G 1/2”)

info.ch@bucherhydraulics.com www.bucherhydraulics.com

© 2021 by Bucher Hydraulics AG Frutigen, CH-3714 Frutigen
All rights reserved.
Data is provided for the purpose of product description only, and must not be construed as warranted characteristics in the legal sense. The information does not relieve users from the duty of conducting their own evaluations and tests. Because the products are subject to continual improvement, we reserve the right to amend the product specifications contained in this catalogue.

Classification: 430.305.305.305.320.310

BUCHER hydraulics

WWW.SUMY.IR

Pressure valve
Reducing function

Q_{max} = 10 l/min, p_{max} = 250 bar
direct acting, spool type, mechanically adjustable
Type series: DDRB-7M-2-...

- Screw-in cartridge valve
- For cavity AM
- All external parts with zinc-nickel plating according to DIN EN ISO 19598
- Installation in threaded port body type GAMA
- Excellent stability over the whole pressure and flow range
- Full-flow secondary pressure relief

Description

The 3-way pressure-reducing valves, series DDR_-7M-..., are size 2, direct acting, screw-in cartridge valves with a 3/4-16 UNF mounting thread. They are designed on the proven sliding-spool principle. The straightforward design delivers an outstanding price/performance ratio and good pressure/flow ratings. The valves control the required secondary pressure in port 3 to the value set with the pressure adjustment, and independently of the inlet pressure in port 2. In control mode, the connection 2 to 3 opens until the pressure in port 3 reaches the preset level. If the pressure rises above the preset level, the control spool opens the 3 to 1 connection until balance is restored. To obtain a reliable pressure setting over the entire pressure range, the overall pressure range is divided into different pressure levels. Each pressure range corresponds to a particular spring that allows a certain maximum operating pressure to be set. The pressure is set by means of an adjusting spindle. All external parts of the screw-in valves are zinc-nickel plated and are thus suitable for use in the harshest operating environments. These valves are mainly used in certain mobile and industrial applications to limit the system pressure. The 3-way design functions as full-flow pressure protection of the secondary circuit, (as soon as the reduced pressure rises above the valve pressure setting). For self-assembly, please refer to the section related data sheets.

Symbol

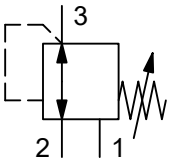

WWW.SUMY.IR

Technical data

General characteristics	Description, value, unit
Function group	Pressure valve
Function	Reducing function
Design	Screw-in cartridge valve
Controls	mechanically adjustable
Characteristic	direct acting, spool type
Construction size	NG 2
Thread size	3/4-16 UNF-2A
Mounting attitude	unrestricted
Weight	0.20 kg
Cavity acc. factory standard	For cavity AM
Tightening torque steel	50 Nm
Tightening torque aluminium	50 Nm
Tightening torque tolerance	± 10 %
Minimum ambient temperature	- 30 °C
Maximum ambient temperature	+ 80 °C
Surface protection	All external parts with zinc-nickel plating according to DIN EN ISO 19598
Sealing material	see ordering code
Seal kit order number	NBR: DS-249-N / FKM: DS-249-V

Hydraulic characteristics	Description, value, unit
Maximum operating pressure	250 bar
Maximum flow rate	10 l/min
Flow direction	see symbol
Hydraulic fluid	HL and HLP mineral oil according to DIN 51 524; other fluids on request!
Minimum fluid temperature	- 30 °C
Maximum fluid temperature	+ 80 °C
Viscosity range	10 ... 650 mm^2/s (cSt)
Recommended viscosity range	15 ... 250 mm^2/s (cSt)
Minimum fluid cleanliness (cleanlineless class according to ISO 4406:1999)	class 20/18/15
Opening pressure	160 / 250 bar
Pressure adjustment range	pressure range 16: 1 turn = ca. 24 bar pressure range 25: 1 turn = ca. 43 bar
Internal leakage flow rate	< 40 cm^3/min (with p2 250 bar) with oil viscosity 33 mm^2/s (cSt)

Performance graphs

measured with oil viscosity 33.0 mm²/s (cSt)

p = f (Q) Pressure-flow rate

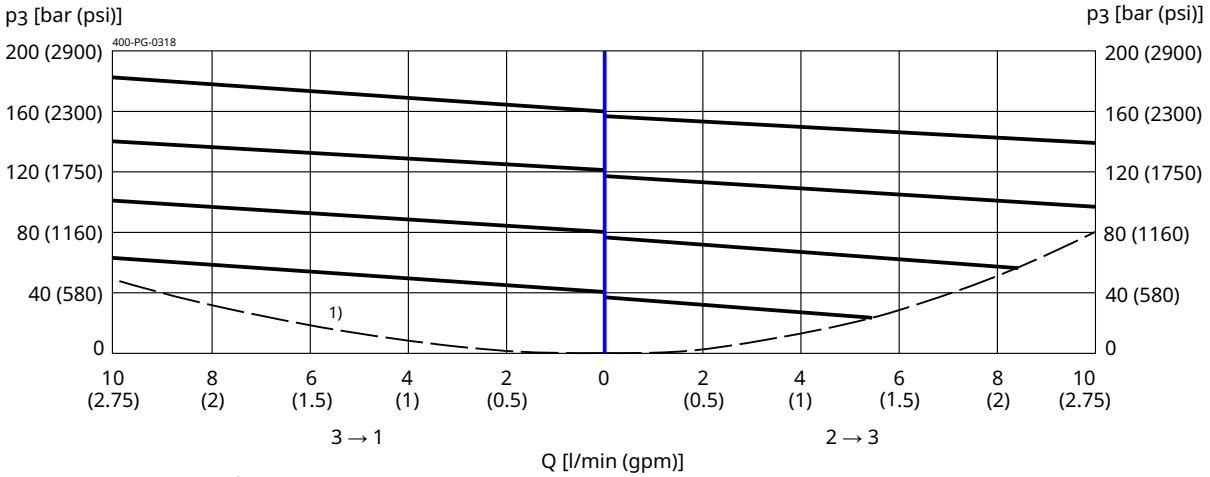

1) = pN = 160 bar (2300 psi)

p = f (Q) Pressure-flow rate

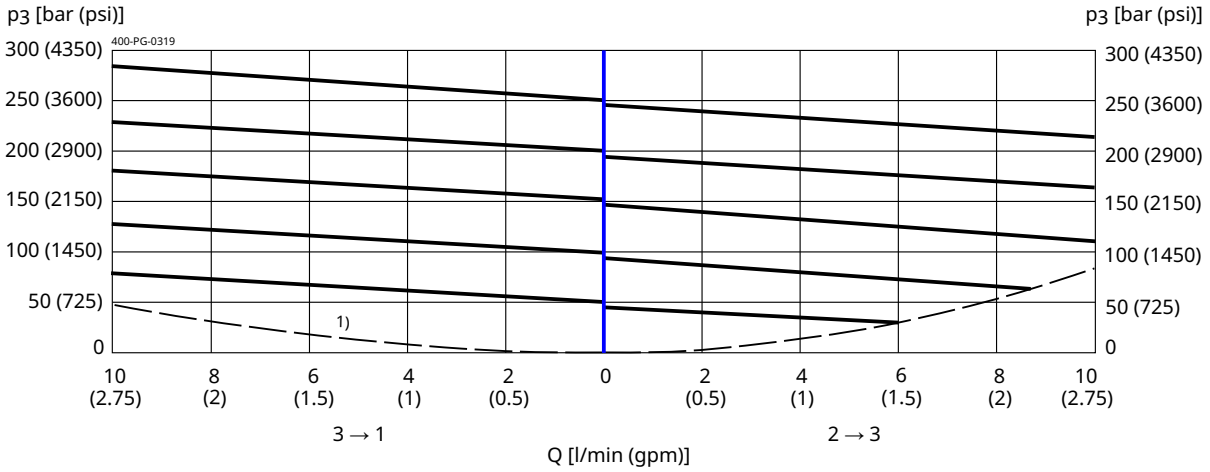

1) = pN = 250 bar (3600 psi)

Dimensions and sectional view

Beispiel für die Masseinheit:
Example for the dimensional units:

0.79 = 0.79 mm millimeter
(.031) = 0.031" inch

Version "S": Einstellschraube *(Standard)*
Version "S": adjustment screw *(standard)*

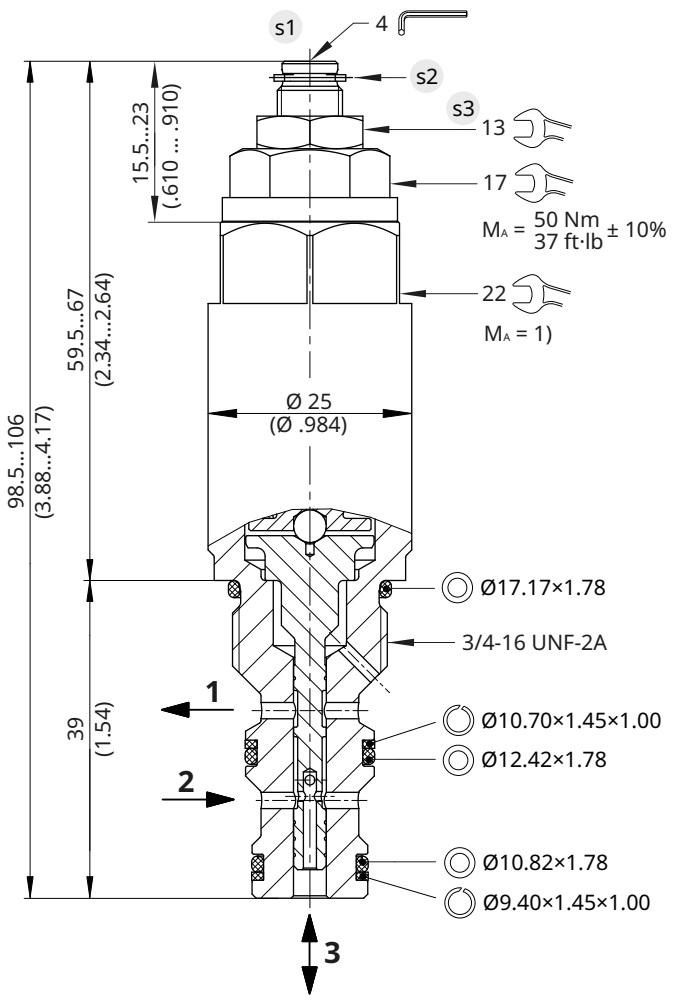

Version "H": Einstellschraube mit Handrad
Version "H": adjustment screw with handknob

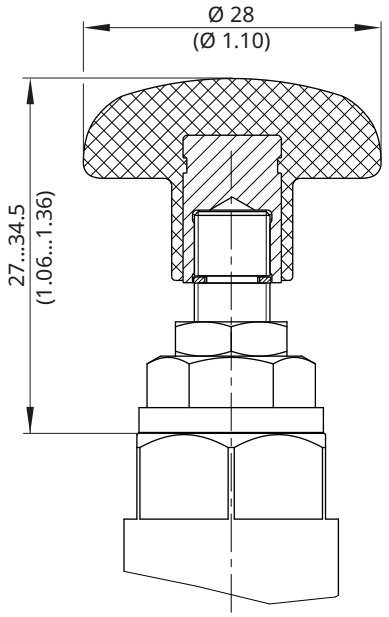

Installation information

ATTENTION!
Only qualified personnel with mechanical skills may carry out any maintenance work. Generally, the only work that should ever be undertaken is to check, and possibly replace, the seals. When changing seals, oil or grease the new seals thoroughly before fitting them.

NOTE!
Set the required pressure with the adjusting screw s1 . After you have set the valve, lock the adjusting screw s1 with the lock nut.

NOTE!
1) When fitting the screw-in cartridge valve, use the specified tightening torque. The value can be found in the chapter "Technical data".

NOTE!
To ensure proper function, the valve should be air-bled before commissioning. Refer to chapter "Air-bleeding before commissioning"

NOTE!
The seals are not available individually. The seal kit order number can be found in the chapter "Technical data".

Ordering code

Ex. D DR B - 7 M - 2 - 16 - S _ - 2

D	=	pressure-control valve
DR	=	direct acting pressure reducing cartridge
A ... Q	=	standard model according to valid data sheet
Z ... R	=	special model (on request)
7	=	3-way pressure-reducing
M	=	cavity type AM
2	=	nominal size 2
16	=	pressure range ...160 bar / ...2300 psi
25	=	pressure range ...250 bar / ...3600 psi
S	=	adjustment screw with internal hexagon **(standard)**
H	=	adjustment screw with hand knob
(blank)	=	NBR (nitril-butadien-rubber / BUNA) seals **(standard)**
V	=	FKM (fluorocarbon rubber / VITON) seals (special seals on request)
1...9	=	technical design no. (omit by ordering)

Related data sheets

Reference	Description
400-P-040011	Form tools
400-P-040181	Cavity AM
400-P-720111	Threaded port body GAMA

info.ch@bucherhydraulics.com **www.bucherhydraulics.com**

© 2026 by Bucher Hydraulics AG Frutigen, 3714 Frutigen, Switzerland

All rights reserved.
Data is provided for the purpose of product description only, and must not be construed as warranted characteristics in the legal sense. The information does not relieve users from the duty of conducting their own evaluations and tests. Because the products are subject to continual improvement, we reserve the right to amend the product specifications contained in this catalogue.

BUCHER hydraulics
WWW.SUMY.IR

General information
Cavity

Type series: DL

Dimensions and sectional view

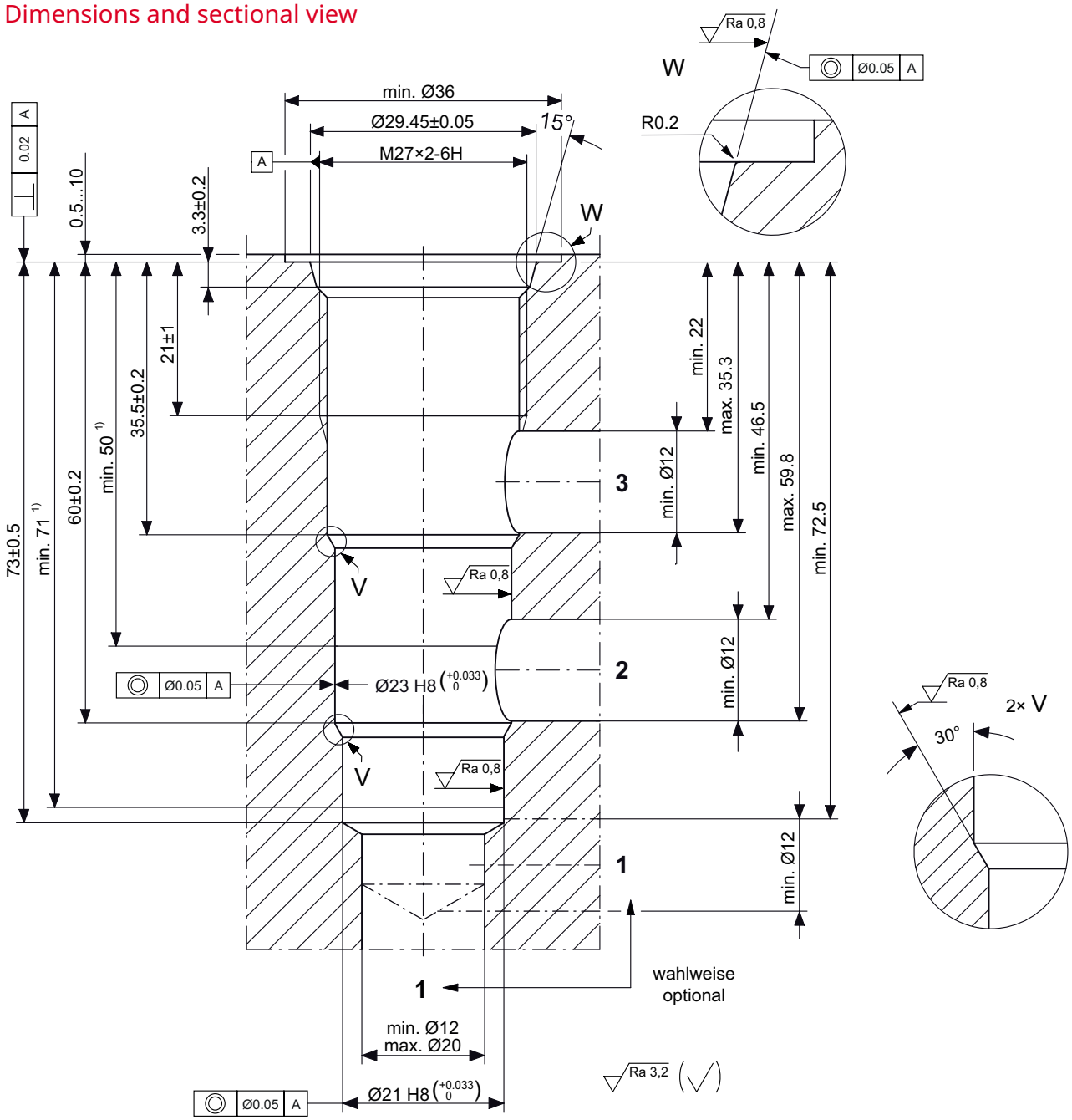

HINWEIS!
NOTE!

1) Passungstiefe
Minimum depth of specified diametral tolerance

Beispiel für die Masseinheit:
Example for the dimensional units:

0.79 = 0.79 mm millimeter

Installation information

ATTENTION!
You must maintain the specified positional and diametral tolerances. To ensure trouble-free operation of the screw-in cartridges, we strongly recommend that pilot drilling, boring, reaming and cavity thread-cutting are always performed in one setup.

NOTE!
The cavity type DL complies with the standard according to ISO 7789: 27-04-0-07.

NOTE!
We offer form toolsets for sale or hire. For further information, see data sheet 400-P-040011.

info.ch@bucherhydraulics.com **www.bucherhydraulics.com**

© 2023 by Bucher Hydraulics AG Frutigen, 3714 Frutigen, Switzerland

All rights reserved.
Data is provided for the purpose of product description only, and must not be construed as warranted characteristics in the legal sense. The information does not relieve users from the duty of conducting their own evaluations and tests. Because the products are subject to continual improvement, we reserve the right to amend the product specifications contained in this catalogue.

BUCHER hydraulics

WWW.SUMY.IR

Pressure valve
Reducing function

Q_{max} = 70 l/min, p_{max} = 350 bar
direct acting, spool type, mechanically adjustable
Type series: DDRA-7L-10-...

- Screw-in cartridge valve
- For cavity DL
- All external parts with zinc-nickel plating according to DIN EN ISO 19598
- Installation in threaded port body type GCLA
- Excellent stability over the whole pressure and flow range
- Full-flow secondary pressure relief
- Sensitive adjustment
- Available with hand-knob

Description

Die Druckventile der Typenreihe DDRA-7L-... sind direktgesteuerte Einschraubventile mit Gewinde M27×2 der NG 10. These two-stage pressure valves, series DDRA-7L-..., are size 10, screw-in cartridge valves with a seated pilot stage and an M27×2 mounting thread. They are designed on the proven sliding-spool principle. The required secondary pressure (port 1) is controlled to the value set independently of the inlet pressure (port 2). If the specified pressure in connection 1 is exceeded, connection 1 opens to 3 to restore the balance. To obtain a reliable pressure setting over the entire pressure range, the overall pressure range is divided into different pressure levels. These valves are mainly used in certain mobile and industrial applications to reduce the system pressure. The pressure is set by means of an adjusting spindle. All external parts of the screw-in valves are zinc-nickel plated and are thus suitable for use in the harshest operating environments. For installation and further information, please refer to the section related data sheets.

Symbol

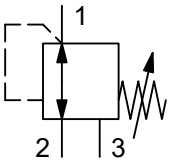

WWW.SUMY.IR

Technical data

General characteristics	Description, value, unit
Function group	Pressure valve
Function	Reducing function
Design	Screw-in cartridge valve
Controls	mechanically adjustable
Characteristic	direct acting, spool type
Construction size	NG 10
Thread size	M27×2
Mounting attitude	unrestricted
Weight	0.60 kg
Cavity acc. ISO	fits into ISO 7789: 27-04-0-07
Cavity acc. factory standard	For cavity DL
Tightening torque steel	80 Nm
Tightening torque aluminium	80 Nm
Tightening torque tolerance	± 10 %
Minimum ambient temperature	- 30 °C
Maximum ambient temperature	+ 80 °C
Surface protection	All external parts with zinc-nickel plating according to DIN EN ISO 19598
Sealing material	see ordering code
Seal kit order number	NBR: DS-324-N / FKM: DS-324-V

Hydraulic characteristics	Description, value, unit
Maximum operating pressure	350 bar
Maximum flow rate	70 l/min
Flow direction	see symbol
Hydraulic fluid	HL and HLP mineral oil according to DIN 51 524; other fluids on request!
Minimum fluid temperature	- 30 °C
Maximum fluid temperature	+ 80 °C
Viscosity range	10 ... 650 mm^2/s (cSt)
Recommended viscosity range	15 ... 250 mm^2/s (cSt)
Minimum fluid cleanliness (cleanlineless class according to ISO 4406:1999)	class 20/18/15
Opening pressure	30 / 60 / 100 / 160 / 250 bar
Pressure adjustment range	pressure range 15...30 bar: 1 turn = ca. 5 bar pressure range 20...60 bar: 1 turn = ca. 8 bar pressure range 30...100 bar: 1 turn = ca. 14 bar pressure range 40...160 bar: 1 turn = ca. 24 bar pressure range 50...250 bar: 1 turn = ca. 34 bar

BUCHER hydraulics
WWW.SUMY.IR

Performance graphs

measured with oil viscosity 33.0 mm²/s (cSt)

p = f (Q) Pressure-flow rate

Pressure range 15...30 bar

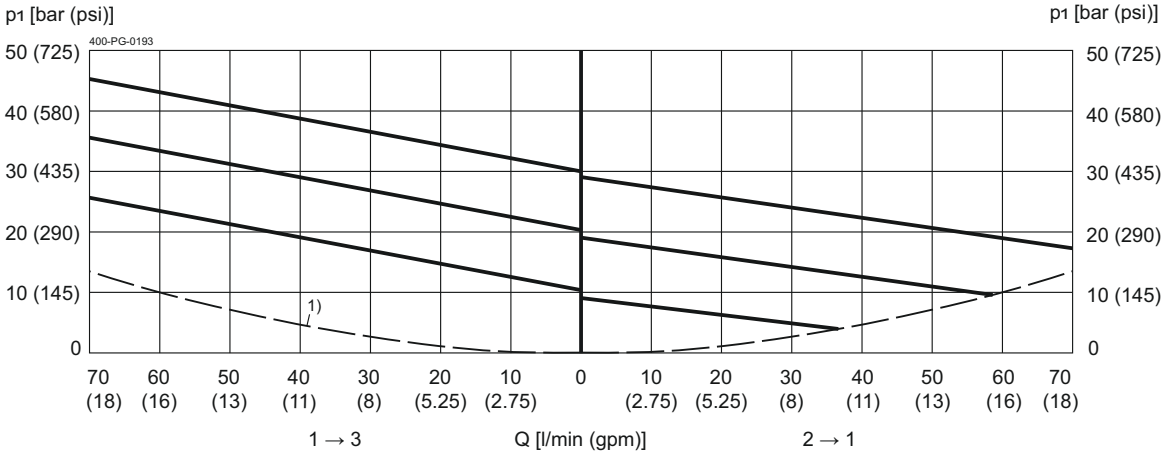

p_N = 30 bar (435 psi)
1) Einsatzgrenze / Application limit

p = f (Q) Pressure-flow rate

Pressure range 20...60 bar

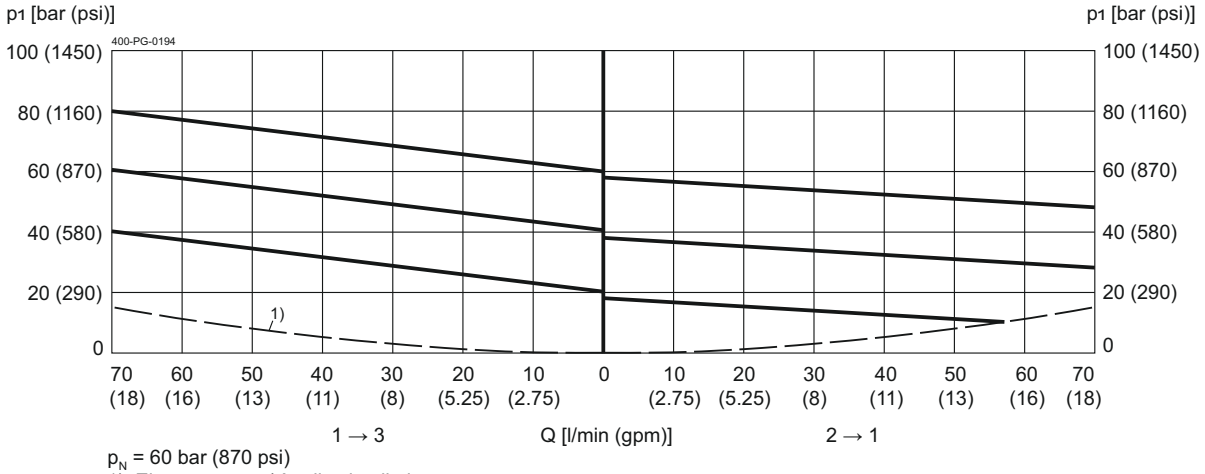

p_N = 60 bar (870 psi)
1) Einsatzgrenze / Application limit

p = f (Q) Pressure-flow rate

Pressure range 30...100 bar

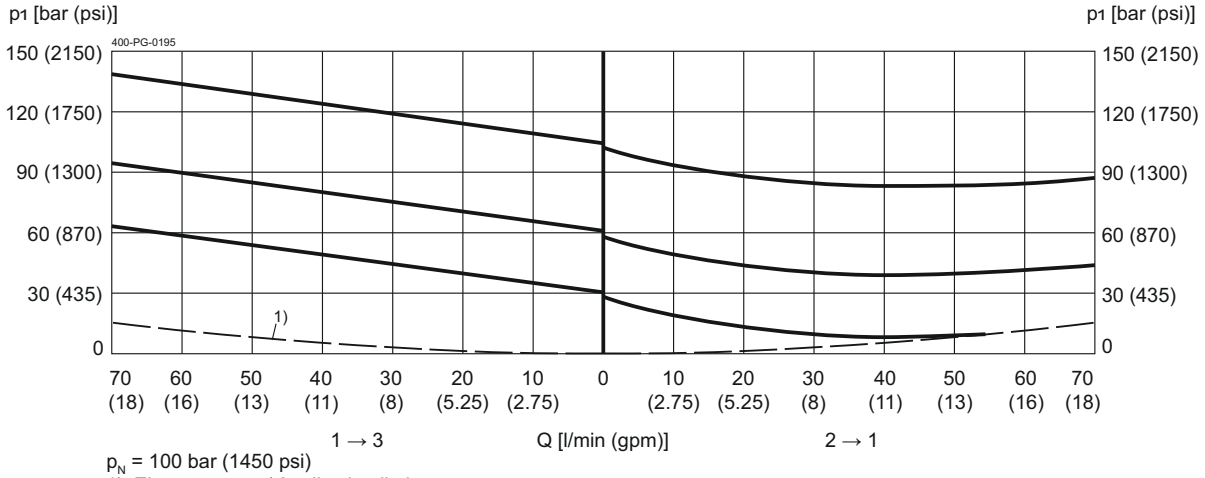

p_N = 100 bar (1450 psi)
1) Einsatzgrenze / Application limit

p = f (Q) Pressure-flow rate

Pressure range 40...160 bar

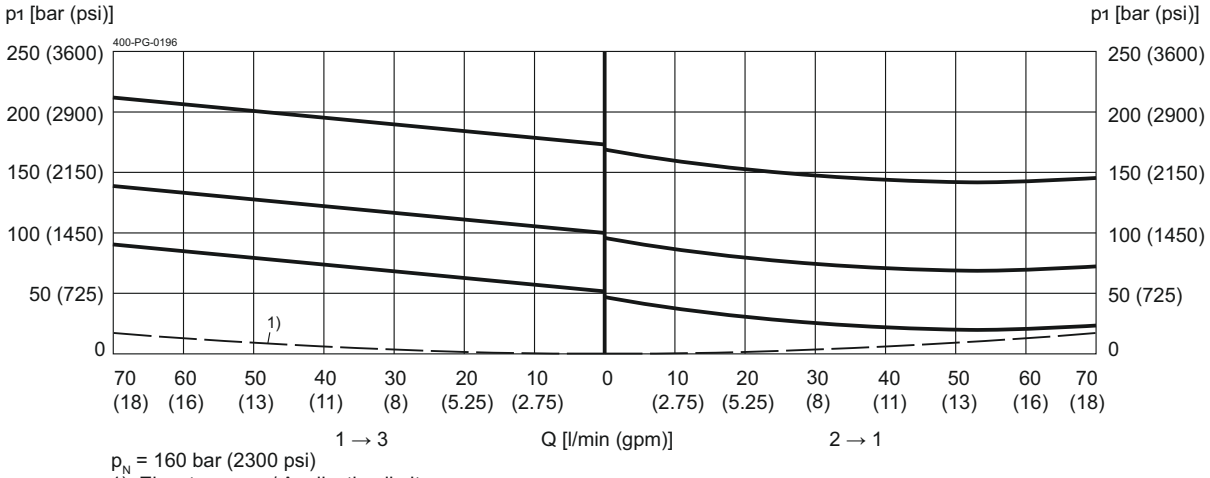

p_N = 160 bar (2300 psi)
1) Einsatzgrenze / Application limit

p = f (Q) Pressure-flow rate

Pressure range 50...250 bar

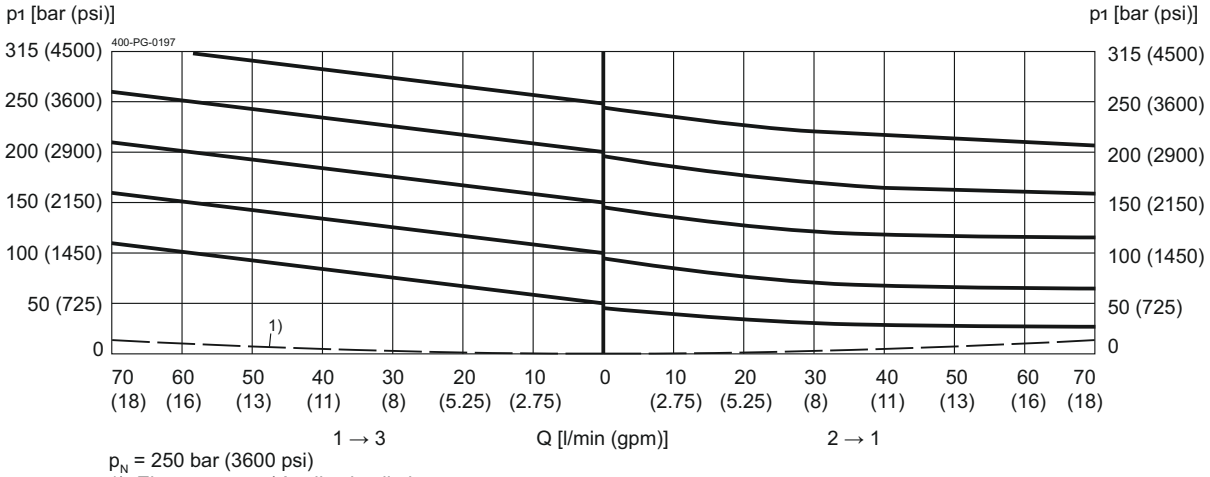

p_N = 250 bar (3600 psi)
1) Einsatzgrenze / Application limit

QL = f (l;Δp) Leakage flow rate

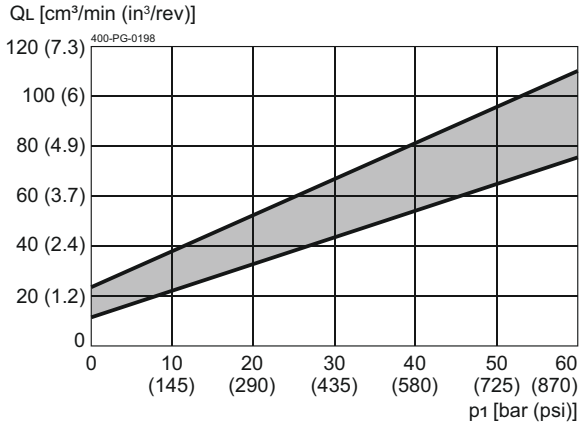

DDRA-7L-10-03…
DDRA-7L-10-06…

QL = f (l;Δp) Leakage flow rate

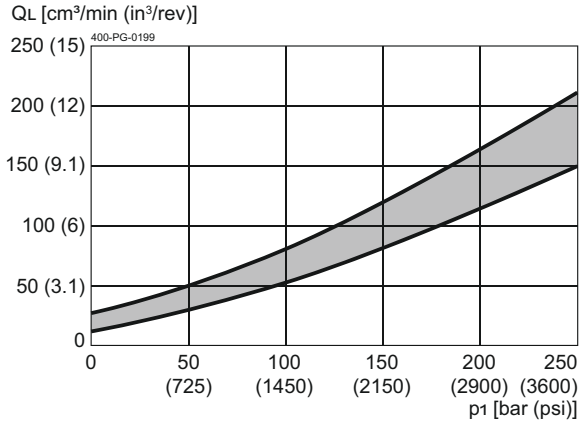

DDRA-7L-10-10…
DDRA-7L-10-16…
DDRA-7L-10-25…

Dimensions and sectional view

Beispiel für die Masseinheit:
Exampel for the dimensional units:

0.79	= 0.79 mm	millimeter
(.031)	= 0.031"	inch

Version "S": Einstellschraube mit Innensechskant (Standard)
Version "S": adjustment screw with internal hexagon (standard)

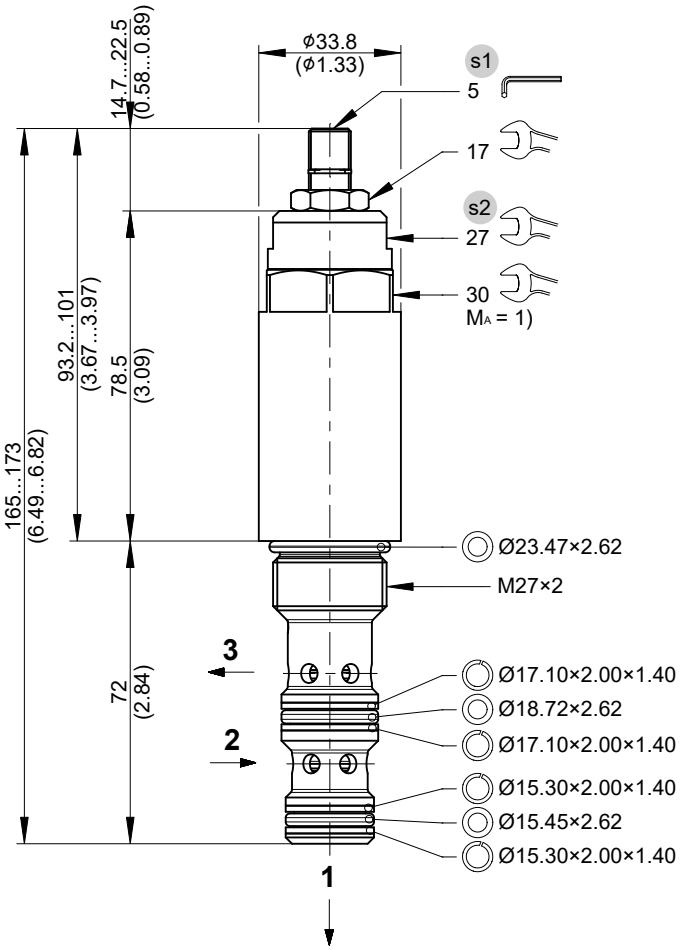

Version "H": Einstellschraube mit Handrad
Version "H": adjustment screw with handknob

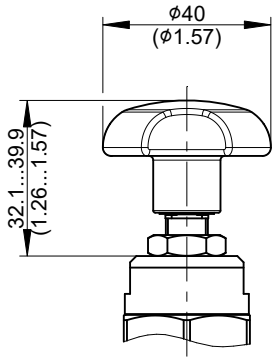

Installation information

NOTE!
1) When fitting the screw-in cartridge valve, use the specified tightening torque. The value can be found in the chapter "Technical data".

NOTE!
Set the required pressure with the adjusting screw s1 . After you have set the valve, lock the adjusting screw s1 with the lock nut.

NOTE!
To ensure proper function, the valve should be air-bled before commissioning. Refer to chapter "Air-bleeding before commissioning"

NOTE!
The seals are not available individually. The seal kit order number can be found in the chapter "Technical data".

ATTENTION!
Only qualified personnel with mechanical skills may carry out any maintenance work. Generally, the only work that should ever be undertaken is to check, and possibly replace, the seals. When changing seals, oil or grease the new seals thoroughly before fitting them.

Air-bleeding before commissioning

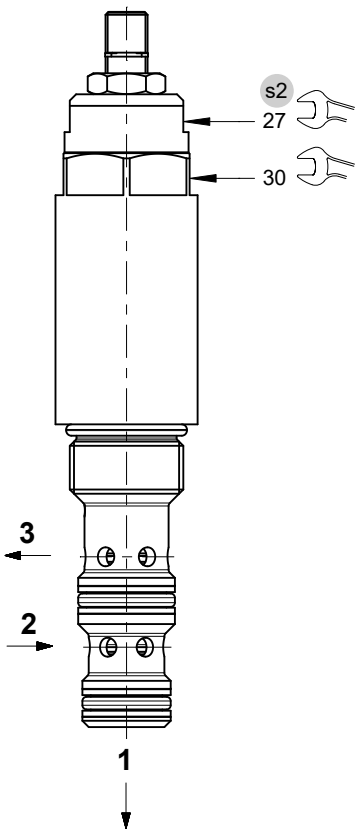

1. Loosen the plug screw s2 , unscrew approx. 2 turns.
2. Apply pressure to port 2 until oil escapes free of air bubbles from the plug srcew. s2 The Valve is deaerated when the pressure medium is free of air bubbles.
3. Tighten the plug screw s2 with a tightening torque of 30 Nm ±10%. (22 ft-lbs ±10%)

Ordering code

Ex. D | DR | A - 7 | L - 10 - 25 - S | _ - 1

D	=	pressure-control valve
DR	=	direct acting pressure reducing cartridge
A ... Q	=	standard model according to valid data sheet
Z ... R	=	special model (on request)
7	=	pressure-reducing with full-flow pressure relief
L	=	cavity type DL
10	=	nominal size 10
03	=	pressure range 15...30 bar / 215...435 psi
06	=	pressure range 20...60 bar / 290...870 psi
10	=	pressure range 30...100 bar / 435...1450 psi
16	=	pressure range 40...160 bar / 580...2300 psi
25	=	pressure range 50...250 bar / 725...3600 psi
S	=	adjustment screw with internal hexagon **(standard)**
H	=	adjustment screw with hand knob
(blank)	=	NBR (nitril-butadien-rubber / BUNA) seals **(standard)**
V	=	FKM (fluorocarbon rubber / VITON) seals (special seals on request)
1 ... 9	=	technical design no. (omit by ordering)

Related data sheets

Reference	Description
400-P-040011	Form tools
400-P-060201	Cavity DL
400-P-740121	Threaded port body GCLA
400-P-740122	Threaded port body GCLAA

info.ch@bucherhydraulics.com **www.bucherhydraulics.com**

© 2025 by Bucher Hydraulics AG Frutigen, 3714 Frutigen, Switzerland

All rights reserved.
Data is provided for the purpose of product description only, and must not be construed as warranted characteristics in the legal sense. The information does not relieve users from the duty of conducting their own evaluations and tests. Because the products are subject to continual improvement, we reserve the right to amend the product specifications contained in this catalogue.

Proportional Pressure-Reducing Cartridge, Size 10

Q_{max} = 120 l/min, p_{max} = 315 bar
Seated pilot, spool-type main stage
Series DRPSA-5D…

- Compact construction for cavity type DD – M24 x 1.5
- Operated by a proportional solenoid
- 5 pressure ranges available
- External pilot-oil drain
- Excellent stability over the whole pressure and flow range
- All exposed parts with zinc-nickel plating
- High pressure wet-armature solenoids
- The slip-on coil can be rotated, and it can be replaced without opening the hydraulic envelope
- Various plug-connector systems and voltages are available
- Can be fitted in a line-mounting body
- Can be fitted in sandwich bodies

1 Description

Series DRPSA-5D… two-stage proportional pressure-reducing valves are size 10, high performance screw-in cartridges with an M24x1.5 mounting thread. They consist of a spool-type main stage and a leak-free, poppet-type pilot stage. These cartridges reduce the outlet pressure in A proportionally to the control current and independently of the inlet pressure in B. In the initial position (solenoid de-energised), the connection B → A is open until the pressure reaches the minimum setting. Five spring ranges are available in order to obtain precise pressure settings over the whole of the required pressure range. To achieve a high degree of functional stability in systems that are susceptible to oscillation, the pilot drain (port Z) must be routed to tank with the least possible back-pressure. These proportional pressure-reducing cartridges are predominantly used in mobile and industrial applications for reducing a system pressure. All external parts of the cartridge are zinc-nickel plated to DIN 50 979 and are thus suitable for use in the harshest operating environments. The slip-on coils can be replaced without opening the hydraulic envelope and can be positioned at any angle through 360°. If you intend to manufacture your own cavities or are designing a line-mounting installation, please refer to the section “Related data sheets”.

2 Symbol

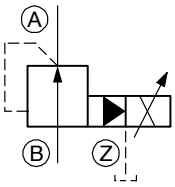

3 Technical data

General characteristics	Description, value, unit
Designation	proportional pressure-reducing cartridge
Design	seated pilot, spool-type main stage
Mounting method	screw-in cartridge M24 x 1.5
Tightening torque	Can be fitted in steel 65 Nm ± 10 % Can be fitted in aluminium 50 Nm ± 10 %
Size	nominal size 10, cavity type DD

WWW.SUMY.IR

General characteristics	Description, value, unit
Weight	0.50 kg
Mounting attitude	unrestricted (preferably vertical, coil down)
Ambient temperature range	-25 °C … +50 °C

Hydraulic characteristics	Description, value, unit
Maximum operating pressure - ports A and B - port Z	315 bar (for 350 bar, consult BUCHER) no back-pressure
Maximum flow rate	120 l/min
Nominal pressure ranges	60 bar, 100 bar, 160 bar, 250 bar, 315 bar
Pilot-oil consumption	0.1 … 0.4 l/min
Flow direction	see symbol
Hydraulic fluid	HL and HLP mineral oil to DIN 51 524; for other fluids, please contact BUCHER
Hydraulic fluid temperature range	-25 °C … +70 °C
Viscosity range	15…380 mm^2/s (cSt), recommended 20...130 mm^2/s (cSt)
Minimum fluid cleanliness Cleanliness class to ISO 4406 : 1999	class 18/16/13

Electrical characteristics	Description, value, unit
Supply voltage	12 V DC, 24 V DC
Supply voltage tolerance	± 10 %
Control current	12 V = 0…1400 mA, 24 V = 0…750 mA
Power consumption at max. control current	max. 19 W
Coil resistance R - cold value at 20 °C - max. warm value	12 V = 5.8 Ω / 24 V = 20.9 Ω 12 V = 9.1 Ω / 24 V = 32.7 Ω
Recommended PWM frequency (dither)	200 Hz
Hysteresis with PWM	2…4 % I_N
Reversal error with PWM	1…3 % I_N
Sensitivity with PWM	≤ 1 % I_N
Reproducibility with PWM	< 2 % p_N
Relative duty cycle	100 %
Protection class to ISO 20 653 / EN 60 529	IP 65 / IP 67 / IP 69K, see “Ordering code” (with appropriate mating connector and proper fitting and sealing)
Electrical connection	DIN EN 175301-803, 3-pin 2 P+E (standard) for other connectors, see “Ordering code”

4 Performance graphs

measured with oil viscosity 33 mm²/s (cSt)

p = f (I) Pressure adjustment characteristic

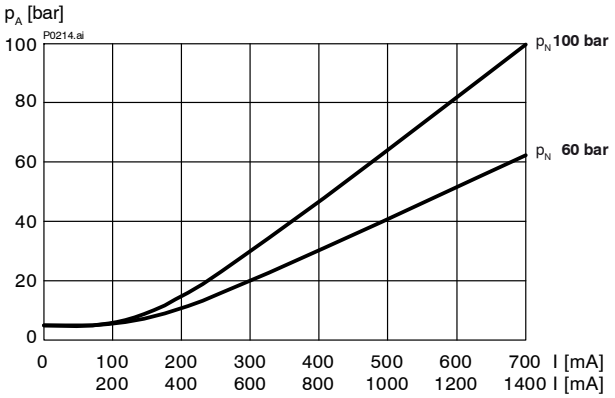

p = f (I) Pressure adjustment characteristic

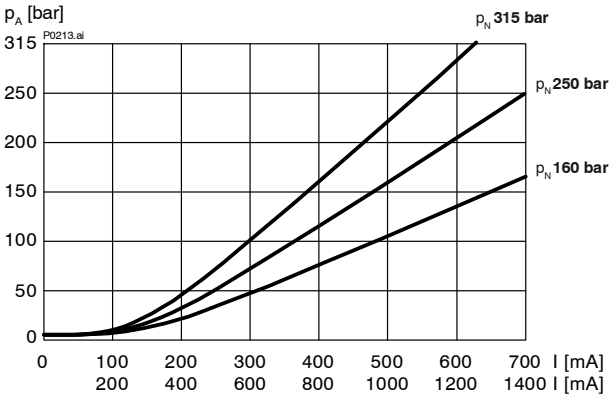

p = f (Q) Pressure - Flow rate characteristic p_N = 60 bar

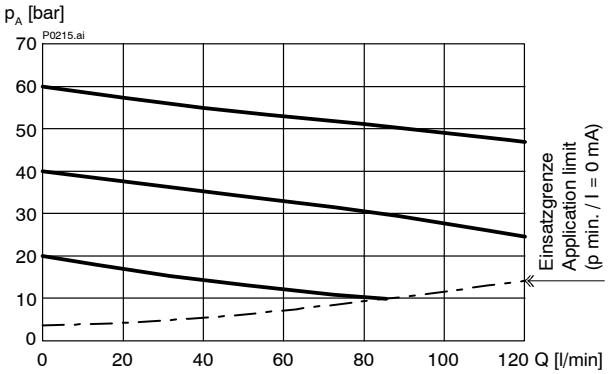

p = f (Q) Pressure - Flow rate characteristic p_N = 100 bar

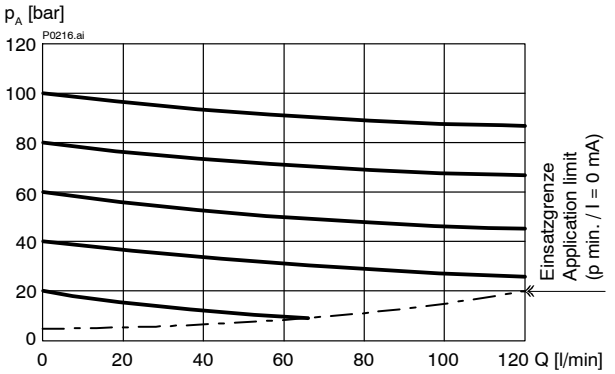

p = f (Q) Pressure - Flow rate characteristic p_N = 160 bar

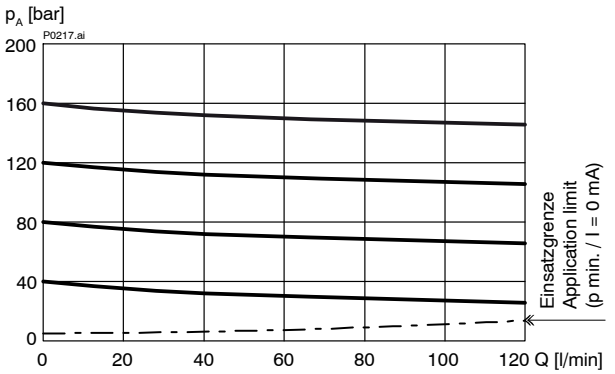

p = f (Q) Pressure - Flow rate characteristic p_N = 250 bar

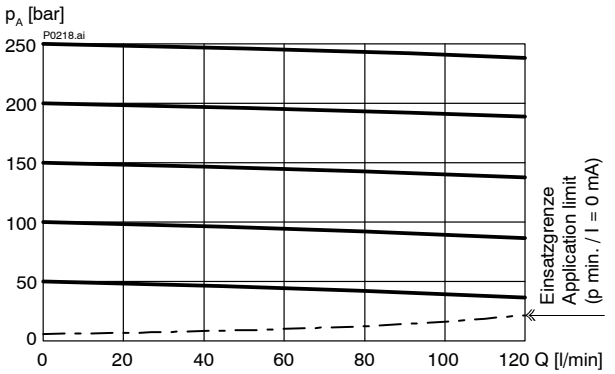

p = f (Q) Pressure - Flow rate characteristic p_N = 315 bar

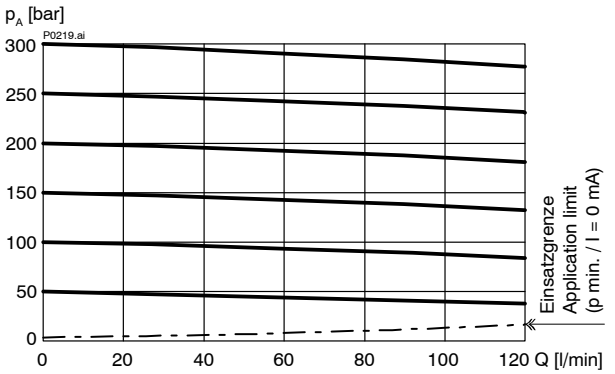

WWW.SUMY.IR

5 Dimensions & sectional view

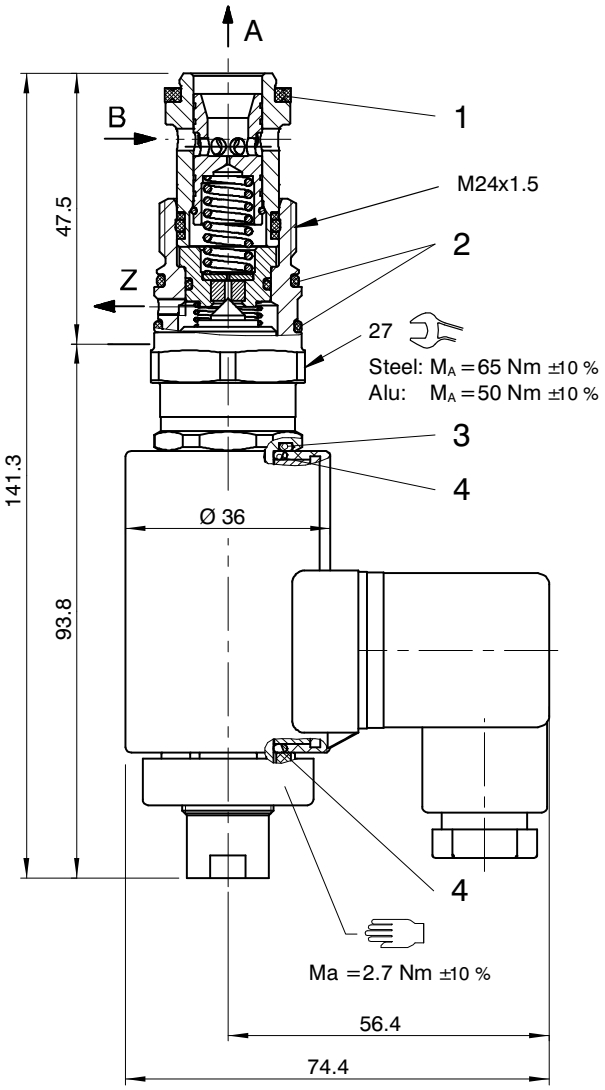

6 Installation information

IMPORTANT!
To achieve the maximum performance rating, fit the solenoid coil as shown (with the plug pins at the bottom) and install the valve in a steel body. When fitting the cartridges, note the mounting attitude (preferably vertical, with coil down → automatic air bleed) and use the specified tightening torque. No adjustments are necessary, since the cartridges are set in the factory.

ATTENTION!
Only qualified personnel with mechanical skills may carry out any maintenance work. Generally, the only work that should ever be undertaken is to check, and possibly replace, the seals. When changing seals, oil or grease the new seals thoroughly before fitting them.

Seal kit NBR no. DS-339-N [1)]

Item	Qty.	Description			
1	1	Seal ring		∅ 22,10 / 16,50 x 2,50	
2	2	O-ring	no. 020	∅ 21,95 x 1,78	N90
3	1	O-ring		∅ 18,00 x 2,00	Viton
4	2	O-ring		∅ 16,00 x 2,00	Viton

IMPORTANT!
1) Seal kit with FKM (Viton) seals, no. DS-339-V

7 Ordering code

Ex. DRP S A - 5 D - 315 - 10 _ - 2 24 D _

DRP	=	pressure-reducing cartridge, two stage
S	=	standard solenoid (proportional)
A ... Q	=	standard model - see relevant data sheets
Z ... R	=	special features - please consult BUCHER
5	=	pressure function 5 (pressure-reducing, external pilot drain)
D	=	cavity type DD
315	=	pressure range …315 bar
250	=	pressure range …250 bar
160	=	pressure range …160 bar
100	=	pressure range …100 bar
060	=	pressure range … 60 bar
10	=	nominal size 10
(blank)	=	NBR (Nitrile) seals (**standard**)
V	=	FKM (Viton) seals (special seals - please contact BUCHER)
1 ... 9	=	design stage (omit when ordering new units)
...	=	voltage e.g. **24** (24 V)
D	=	current DC
(blank)	=	DIN EN 175301-803 connection with mating plug (**standard, IP 65**)
M100	=	DIN EN 175301-803 connection without mating plug
C	=	Kostal plug connection (IP 65)
JT	=	Junior Timer radial plug connection (with protection diode, IP65)
IT	=	Junior Timer axial plug connection (with protection diode, IP65)
D	=	Deutsch plug connection 45° DT04-2P (IP67/69K)
DT	=	Deutsch plug connection 45° DT04-2P (with protection diode, IP67/69K)
S	=	AMP Superseal 1.5 (IP67) / Metri-Pack 150 (IP65) plug connection
F	=	flying leads (500 mm)

mating plug not supplied

8 Related data sheets

Reference	(Old no.)	Description
400-P-040011	(i-32)	The form-tool hire programme
400-P-060121	(i-45.2)	Cavity type DD
400-P-120110	(W-2.141)	Coils for screw-in cartridge valves
400-P-510101		Amplifier unit for proportional valves (1-channel) PBS - 3A
400-P-593451		Sandwich prop. presssure-reducing valve, ISO size 03, type SDRPSB-5…
400-P-593501		Sandwich prop. presssure-reducing valve, ISO size 05, type SDRPSA-5…
400-P-740111	(G-24.21)	Line- and manifold-mounting body, type DDY-12 (G 1/2")

info.ch@bucherhydraulics.com www.bucherhydraulics.com

© 2020 by Bucher Hydraulics AG Frutigen, CH-3714 Frutigen
All rights reserved.
Data is provided for the purpose of product description only, and must not be construed as warranted characteristics in the legal sense. The information does not relieve users from the duty of conducting their own evaluations and tests. Because the products are subject to continual improvement, we reserve the right to amend the product specifications contained in this catalogue.

Classification: 430.305.305.305.320.310

Inverse Proportional Pressure-Reducing Cart., Size 10

Q_{max} = 120 l/min, p_{max} = 300 bar
Seated pilot, spool-type main stage
Series DRPSA-5DG…

- Compact construction for cavity type DD – M24 x 1.5
- Nominal pressure when solenoid de-energised (fail-safe function)
- 5 pressure ranges available
- All exposed parts with zinc-nickel plating
- High pressure wet-armature solenoids
- The slip-on coil can be rotated, and it can be replaced without opening the hydraulic envelope
- Various plug-connector systems and voltages are available
- With integral manual pressure setting
- Can be fitted in a line-mounting body

1 Description

Series DRPSA-5DG… inverse-proportional pressure-reducing valves are size 10, high performance, two stage screw-in cartridges with an M24 x 1.5 mounting thread. They consist of a spool-type main stage and a leak-free, poppet-type pilot stage with a falling pressure/current characteristic. With these proportional pressure-reducing cartridges, the outlet pressure in A is dependent on the electrical control current and can be continuously varied. When the solenoid is de-energised (initial position), the effective pressure is the nominal pressure of the applicable pressure range (fail-safe function). In control mode, the reduced pressure is inversely proportional to the change in the required value (amplifier output current). In order to obtain precise pressure settings over the whole of the required pressure range (optimum resolution), the pressure-reducing cartridges are available in five spring ranges. To achieve a high degree of functional stability in systems that are susceptible to oscillation, the pilot drain (port Z) must be routed to tank with the least possible back-pressure. These inverse-proportional pressure-reducing cartridges are predominantly used in mobile and industrial applications for reducing a system pressure. All external parts of the cartridge are zinc-nickel plated according to DIN EN ISO 19 598 and are thus suitable for use in the harshest operating environments. The slip-on coils can be replaced without opening the hydraulic envelope and can be positioned at any angle through 360°. For self-assembly, please refer to the section related data sheets.

2 Symbol

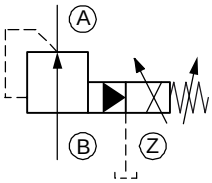

3 Technical data

General characteristics	Description, value, unit
Designation	inverse proportional pressure-relief cartridge
Design	seated pilot, spool-type main stage
Mounting method	screw-in cartridge M24 x 1.5
Tightening torque	can be fitted in steel 65 Nm ± 10 % can be fitted in aluminium 50 Nm ± 10 %
Size	nominal size 10, cavity type DD
Weight	0.60 kg

WWW.SUMY.IR

General characteristics	Description, value, unit
Mounting attitude	unrestricted (preferably vertical, coil down)
Ambient temperature range	-25 °C … +50 °C

Hydraulic characteristics	Description, value, unit
Maximum operating pressure (p_{max}) - main port A and B - port Z	300 bar no back-pressure
Maximum flow rate	120 l/min
Nominal pressure ranges (p_N)	50 bar, 100 bar, 160 bar, 230 bar, 300 bar
Pilot-oil consumption	0.1 … 0.4 l/min
Flow direction	B → A, see symbols
Hydraulic fluid	HL and HLP mineral oil to DIN 51 524; for other fluids, please contact BUCHER
Hydraulic fluid temperature range	-25 °C … +70 °C
Viscosity range	15…380 mm^2/s (cSt), recommended 20...130 mm^2/s (cSt)
Minimum fluid cleanliness Cleanliness class to ISO 4406 : 1999	class 18/16/13

Electrical characteristics	Description, value, unit
Supply voltage	12 V DC, 24 V DC
Control current	12 V = 0…1400 mA, 24 V = 0…750 mA
Power consumption at max. control current	max. 19 W
Coil resistance R - cold value at 20 °C - max. warm value	12 V = 5.8 Ω / 24 V = 20.9 Ω 12 V = 9.1 Ω / 24 V = 32.7 Ω
Recommended PWM frequency (dither)	200 Hz
Hysteresis with PWM	2…4 % I_N
Reversal error with PWM	2…4 % I_N
Sensitivity with PWM	< 1 % I_N
Reproducibility with PWM	< 2 % p_N
Relative duty cycle	100 %
Protection class to ISO 20 653 / EN 60 529	IP 65 / IP 67 / IP 69K, see “Ordering code” (with appropriate mating connector and proper fitting and sealing)
Electrical connection	DIN EN 175301-803, 3-pin 2 P+E (standard) for other connectors, see “Ordering code”

4 Performance graphs measured with oil viscosity 33 mm²/s (cSt)

p = f (I) Pressure adjustment characteristic

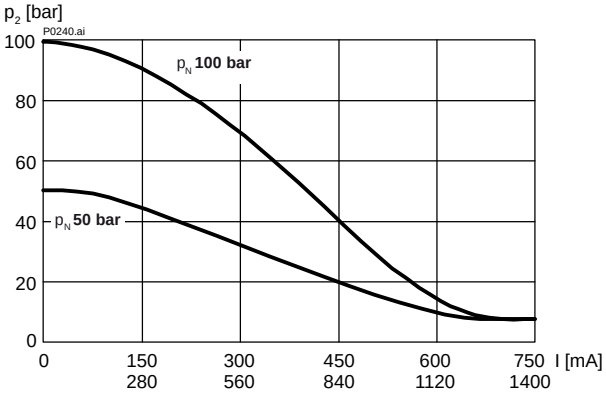

p = f (I) Pressure adjustment characteristic

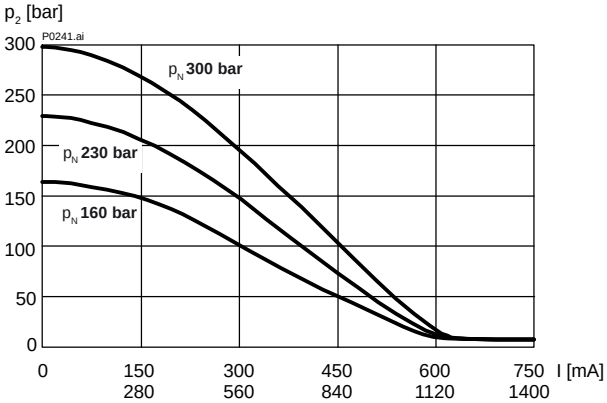

p = f (Q) Pressure - Flow rate characteristic p_N = 50 bar

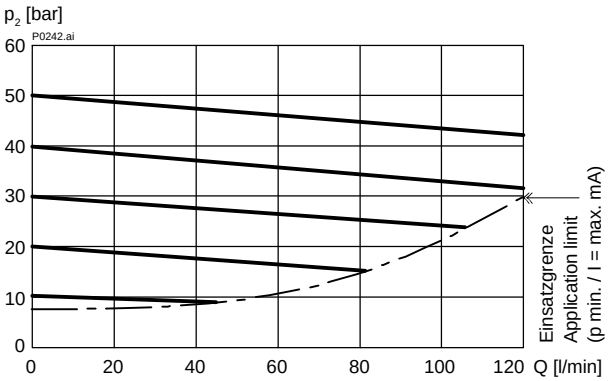

p = f (Q) Pressure - Flow rate characteristic p_N = 100 bar

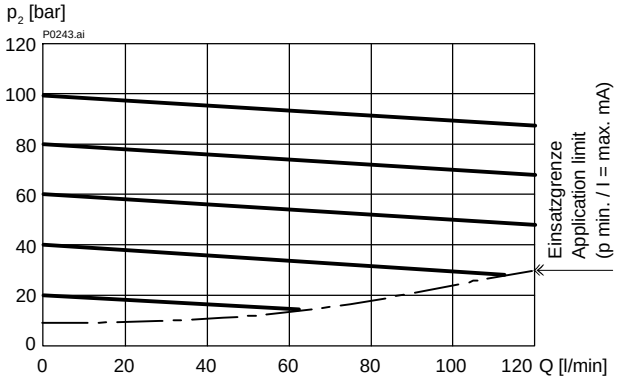

p = f (Q) Pressure - Flow rate characteristic p_N = 160 bar

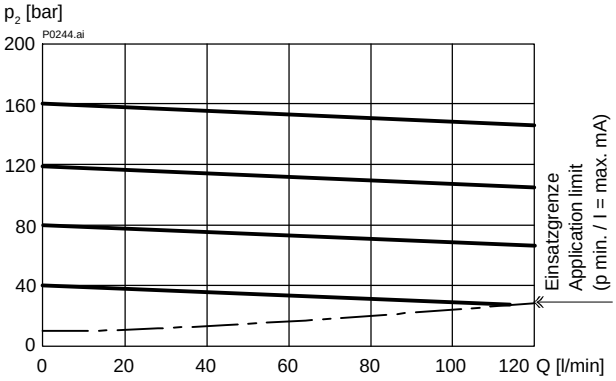

p = f (Q) Pressure - Flow rate characteristic p_N = 230 bar

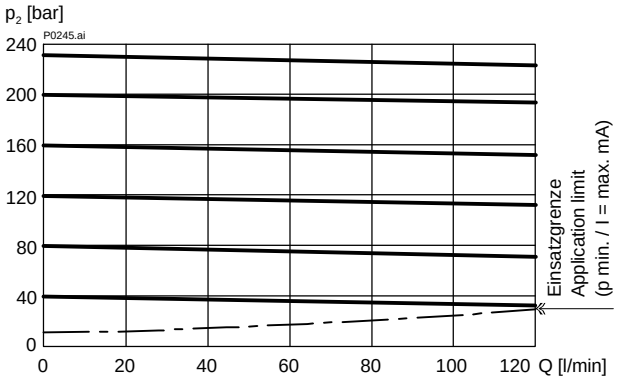

p = f (Q) Pressure - Flow rate characteristic p_N = 300 bar

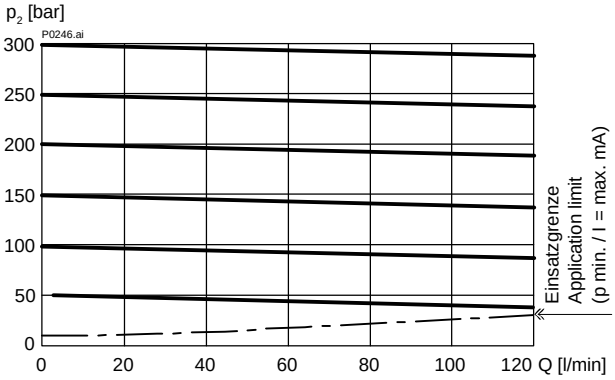

5 Dimensions & sectional view

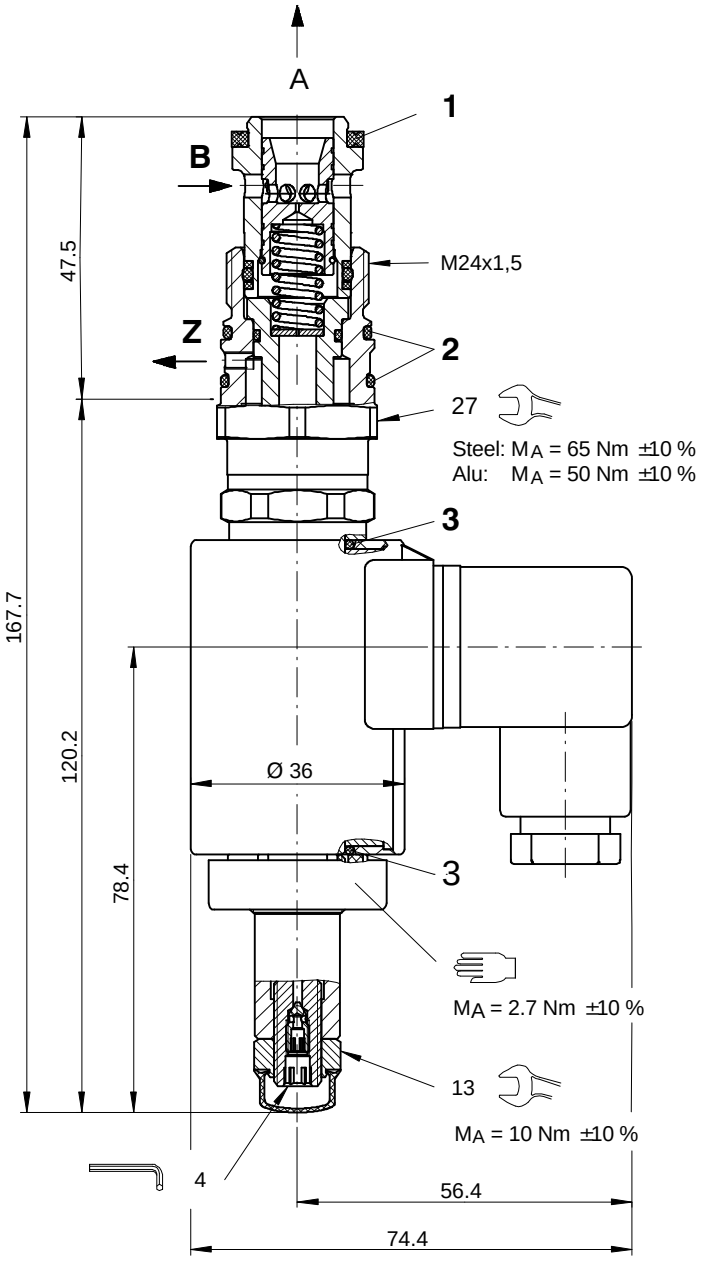

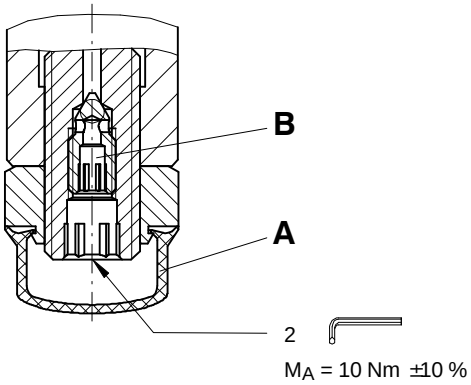

Seal kit NBR no. DS-339-N [1)]

Item	Qty.	Description			
1	1	Seal ring		∅ 22,10 / 16,50 x 2,50	
2	2	O-ring	no. 020	∅ 21,95 x 1,78	N90
3	2	O-ring		∅ 16,00 x 2,00	Viton

IMPORTANT!

1) Seal kit with FKM (Viton) seals no. DS-339-V

Integral air-bleeding

If necessary, air can be purged from these proportional pressure-reducing cartridges by using the integral air-bleed screw (Item B). The procedure is as follows:

A Protective cap

B Air-bleed screw

Steps:

1. Remove the protective cap.
2. Slacken the air-bleed screw approx. 2 turns.
3. Switch the pressure-relief cartridge ON/OFF several times until no more air bubbles escape.
4. Tighten the air-bleed screw (Ma = 1 Nm ± 10%).
5. Fit the protective cap.

6 Installation information

IMPORTANT!
To achieve the maximum performance rating, fit the solenoid coil as shown (with the plug pins at the bottom) and install the valve in a steel body. When fitting the cartridges, note the mounting attitude (preferably vertical, with coil down → automatic air bleed) and use the specified tightening torque. No adjustments are necessary, since the cartridges are set in the factory.

ATTENTION!
Only qualified personnel with mechanical skills may carry out any maintenance work. Generally, the only work that should ever be undertaken is to check, and possibly replace, the seals. When changing seals, oil or grease the new seals thoroughly before fitting them.

7 Manual pressure setting

These inverse proportional pressure-reducing cartridges are equipped as standard with an integral manual pressure setting. If a proportional solenoid is faulty, for example, this manual pressure setting enables the required pressure to be set mechanically. **The manual pressure setting can also be used to make minor pressure adjustments directly at the system.**

IMPORTANT!
Any changes to the manual pressure setting have a direct effect on the factory settings.

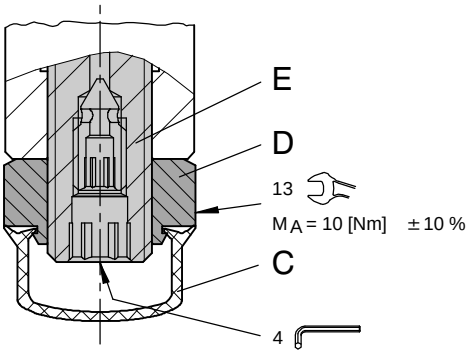

C Protective cap

D Lock nut (13 A/F)

E Adjusting spindle for pressure setting

Setting the pressure manually

Steps:

1. Remove the protective cap.
2. Slacken the lock nut (13 A/F).
3. Unscrew (turn to left) the adjusting spindle (4 A/F) until the required pressure is set.
4. Tighten the lock nut (13 A/F).
5. Fit the protective cap.

ATTENTION!
To reset the inverse-proportional pressure-reducing cartridges to their initial position (the factory setting), a constant pressure (> p_N) and a pressure gauge that measures the pressure in port A are needed. **It should be noted that there must be no flow from B → A, and the set pressure must not exceed the nominal pressure of the spring range employed.** The procedure is as follows:

Restoring the factory settings

Steps:

1. Solenoid de-energised.
2. Remove the protective cap.
3. Slacken the lock nut (13 A/F).
4. Unscrew the adjusting spindle (4 A/F) to its end-stop, then screw it in until the pressure on the gauge reaches the nominal pressure (pN) of the spring range in use.
5. Tighten the lock nut (13 A/F).
6. Fit the protective cap.

8 Ordering code

DRP S A - 5 D G - 300 - 10 N - 1 24 D _

DRP	=	pressure-reducing cartridge, tow stage
S	=	standard solenoid (proportional)
A ... Q	=	standard model - see relevant data sheets
Z ... R	=	special features - please consult BUCHER
5	=	pressure function 5 (pressure-reducing, external pilot drain)
D	=	cavity type DD
G	=	proportional solenoid, inverse type (pulling)
300	=	pressure range …300 bar
230	=	pressure range …230 bar
160	=	pressure range …160 bar
100	=	pressure range …100 bar
050	=	pressure range … 50 bar
10	=	nominal size 10
N	=	NBR (Nitrile) seals **(standard)**
V	=	FKM (Viton) seals (special seals - please contact BUCHER)
1 ... 9	=	design stage (omit when ordering new units)
...	=	voltage e.g. **24** (24 V)
D	=	current DC
(blank)	=	DIN EN 175301-803 connection with mating plug (**standard, IP 65**)
M100	=	DIN EN 175301-803 connection without mating plug
C	=	Kostal plug connection (IP 65)
JT	=	Junior Timer radial plug connection (with protection diode, IP65)
IT	=	Junior Timer axial plug connection (with protection diode, IP65)
D	=	Deutsch plug connection 45° DT04-2P (IP67/69K)
DT	=	Deutsch plug connection 45° DT04-2P (with protection diode, IP67/69K)
S	=	AMP Superseal 1.5 (IP67) / Metri-Pack 150 (IP65) plug connection
F	=	flying leads (500 mm)

mating plug not supplied

9 Related data sheets

Reference	(Old no.)	Description
400-P-040011	(i-32)	The form-tool hire programme
400-P-060121	(i-45.2)	Cavity type DD
400-P-120110	(W-2.141)	Coils for screw-in cartridge valves
400-P-510101		Amplifier unit for proportional valves (1-channel) PBS - 3A
400-P-740111	(G-24.21)	Line- and manifold-mounting body, type DDY-12 (G 1/2")

info.ch@bucherhydraulics.com www.bucherhydraulics.com

© 2026 by Bucher Hydraulics AG Frutigen, CH-3714 Frutigen
All rights reserved.
Data is provided for the purpose of product description only, and must not be construed as warranted characteristics in the legal sense. The information does not relieve users from the duty of conducting their own evaluations and tests. Because the products are subject to continual improvement, we reserve the right to amend the product specifications contained in this catalogue.

Classification: 430.305.305.305.320.310

Proportional Pressure-Reducing Cartridge, Size 16

Q_{max} = 250 l/min, p_{max} = 350 bar
Seated pilot, spool-type main stage
Series DRPSB-5B…

- Compact construction for cavity type EB – M42 x 2
- Operated by a proportional solenoid
- 5 pressure ranges available
- External pilot-oil drain
- Excellent stability over the whole pressure and flow range
- All exposed parts with zinc-nickel plating
- High pressure wet-armature solenoids
- The slip-on coil can be rotated, and it can be replaced without opening the hydraulic envelope
- Various plug-connector systems and voltages are available
- Can be fitted in a line-mounting body
- Can be fitted in sandwich bodies

1 Description

Series DRPSB-5B… two-stage proportional pressure-reducing valves are size 16, high performance screw-in cartridges with an M42x2 mounting thread. They consist of a spool-type main stage and a leak-free, poppet-type pilot stage. These cartridges reduce the outlet pressure in A proportionally to the control current and independently of the inlet pressure in 2. In the initial position (solenoid de-energized), the connection 2 → 1 is open until the pressure reaches the minimum setting. Five spring ranges are available in order to obtain precise pressure settings over the whole of the required pressure range. To achieve a high degree of functional stability in systems that are susceptible to oscillation, the pilot drain (port 3) must be routed to tank with the least possible back-pressure. These proportional pressure-reducing cartridges are predominantly used in mobile and industrial applications for reducing a system pressure. All external parts of the cartridge are zinc-nickel plated according to DIN EN ISO 19 598 and are thus suitable for use in the harshest operating environments. The slip-on coils can be replaced without opening the hydraulic envelope and can be positioned at any angle through 360°. For self-assembly, please refer to the section related data sheets.

2 Symbol

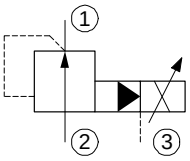

3 Technical data

General characteristics	Description, value, unit
Designation	proportional pressure-reducing cartridge
Design	seated pilot, spool-type main stage
Mounting method	screw-in cartridge M42 x 2
Tightening torque	Can be fitted in steel 200 Nm ± 10 % Can be fitted in aluminium 200 Nm ± 10 %
Size	nominal size 16, cavity type EB to ISO 7789-42-06-0-07
Weight	1.25 kg

WWW.SUMY.IR

General characteristics	Description, value, unit
Mounting attitude	unrestricted (preferably vertical, coil down)
Ambient temperature range	-25 °C … +50 °C

Hydraulic characteristics	Description, value, unit
Maximum operating pressure - ports 1 and 2 - port 3	350 bar no back-pressure
Maximum flow rate	250 l/min
Nominal pressure ranges	8 … 40 bar 8 … 100 bar 8 … 160 bar 8 … 250 bar 8 … 350 bar
Pilot-oil consumption	0.1 … 0.4 l/min
Flow direction	see symbol
Hydraulic fluid	HL and HLP mineral oil to DIN 51 524; for other fluids, please contact BUCHER
Hydraulic fluid temperature range	-25 °C … +70 °C
Viscosity range	15…380 mm^2/s (cSt), recommended 20...130 mm^2/s (cSt)
Minimum fluid cleanliness Cleanliness class to ISO 4406 : 1999	class 18/16/13

Electrical characteristics	Description, value, unit
Supply voltage	12 V DC, 24 V DC
Supply voltage tolerance	± 10 %
Control current	12 V = 0…1400 mA, 24 V = 0…700 mA
Power consumption at max. control current	max. 19 W
Coil resistance R - cold value at 20 °C - max. warm value	12 V = 5.8 Ω / 24 V = 20.9 Ω 12 V = 9.1 Ω / 24 V = 32.7 Ω
Recommended PWM frequency (dither)	200 Hz
Hysteresis with PWM	2…4 % I_N
Reversal error with PWM	1…3 % I_N
Sensitivity with PWM	≤ 1 % I_N
Reproducibility with PWM	< 2 % p_N
Relative duty cycle	100 %
Protection class to ISO 20 653 / EN 60 529	IP 65 / IP 67 / IP 69K, see “Ordering code” (with appropriate mating connector and proper fitting and sealing)
Electrical connection	DIN EN 175301-803, 3-pin 2 P+E (standard) for other connectors, see “Ordering code”

4 Performance graphs

measured with oil viscosity 33 mm^2/s (cSt)

p = f (I) Pressure adjustment characteristic

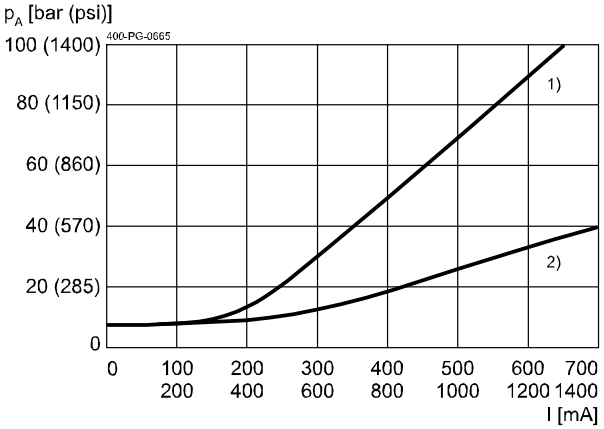

1) p_N 100 bar (1400 psi)
2) p_N 40 bar (570 psi)

p = f (I) Pressure adjustment characteristic

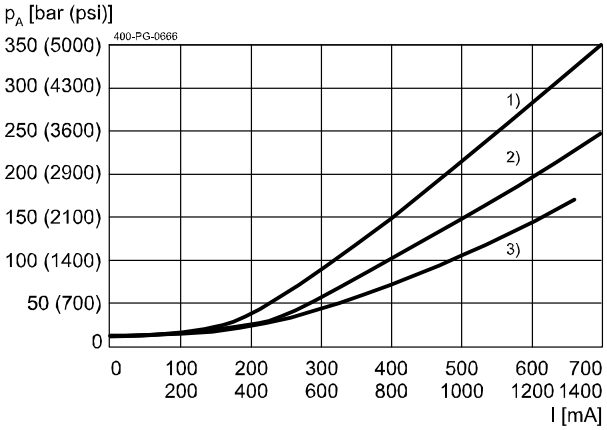

1) p_N 350 bar (5000 psi)
2) p_N 250 bar (3600 psi)
3) p_N 160 bar (2300 psi)

p = f (Q) Pressure - Flow rate characteristic p_N = 40 bar

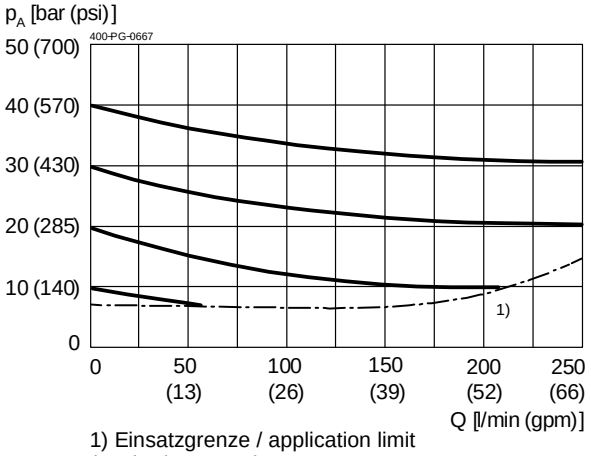

1) Einsatzgrenze / application limit
(p min. / I = 0 mA)

p = f (Q) Pressure - Flow rate characteristic p_N = 100 bar

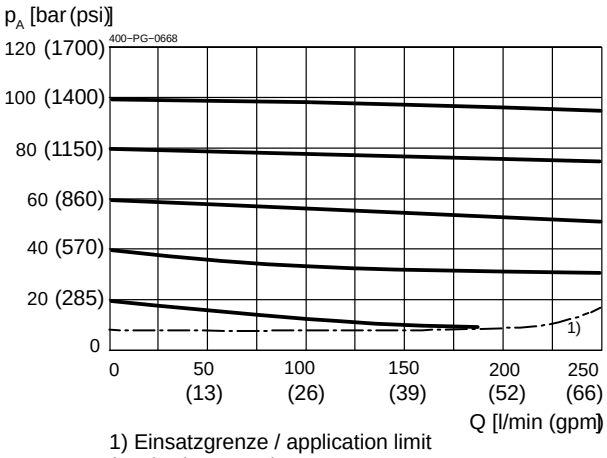

1) Einsatzgrenze / application limit
(p min. / I = 0 mA)

p = f (Q) Pressure - Flow rate characteristic p_N = 160 bar

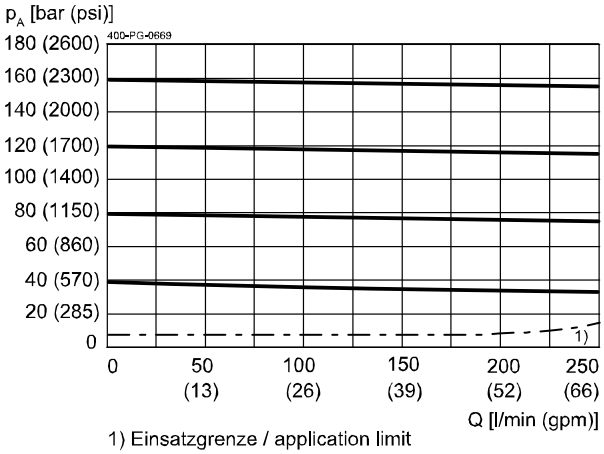

1) Einsatzgrenze / application limit
(p min. / I = 0 mA)

p = f (Q) Pressure - Flow rate characteristic p_N = 250 bar

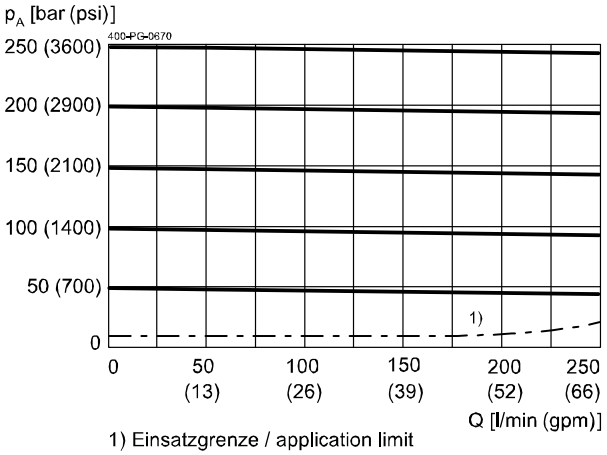

1) Einsatzgrenze / application limit
(p min. / I = 0 mA)

WWW.SUMY.IR

p = f (Q) Pressure - Flow rate characteristic **p_N = 350 bar**

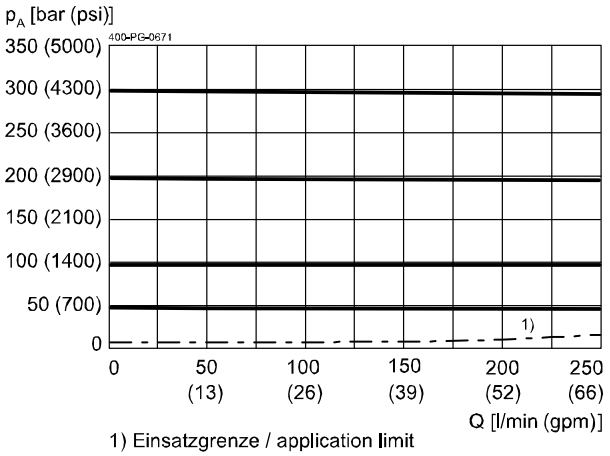

1) Einsatzgrenze / application limit
(p min. / I = 0 mA)

Δp = f (Q) Pressure-drop - Flow rate characteristic
(all pressure ranges)

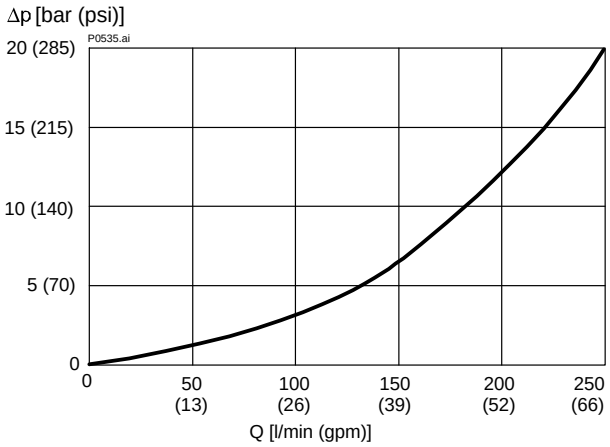

5 Dimensions & sectional view

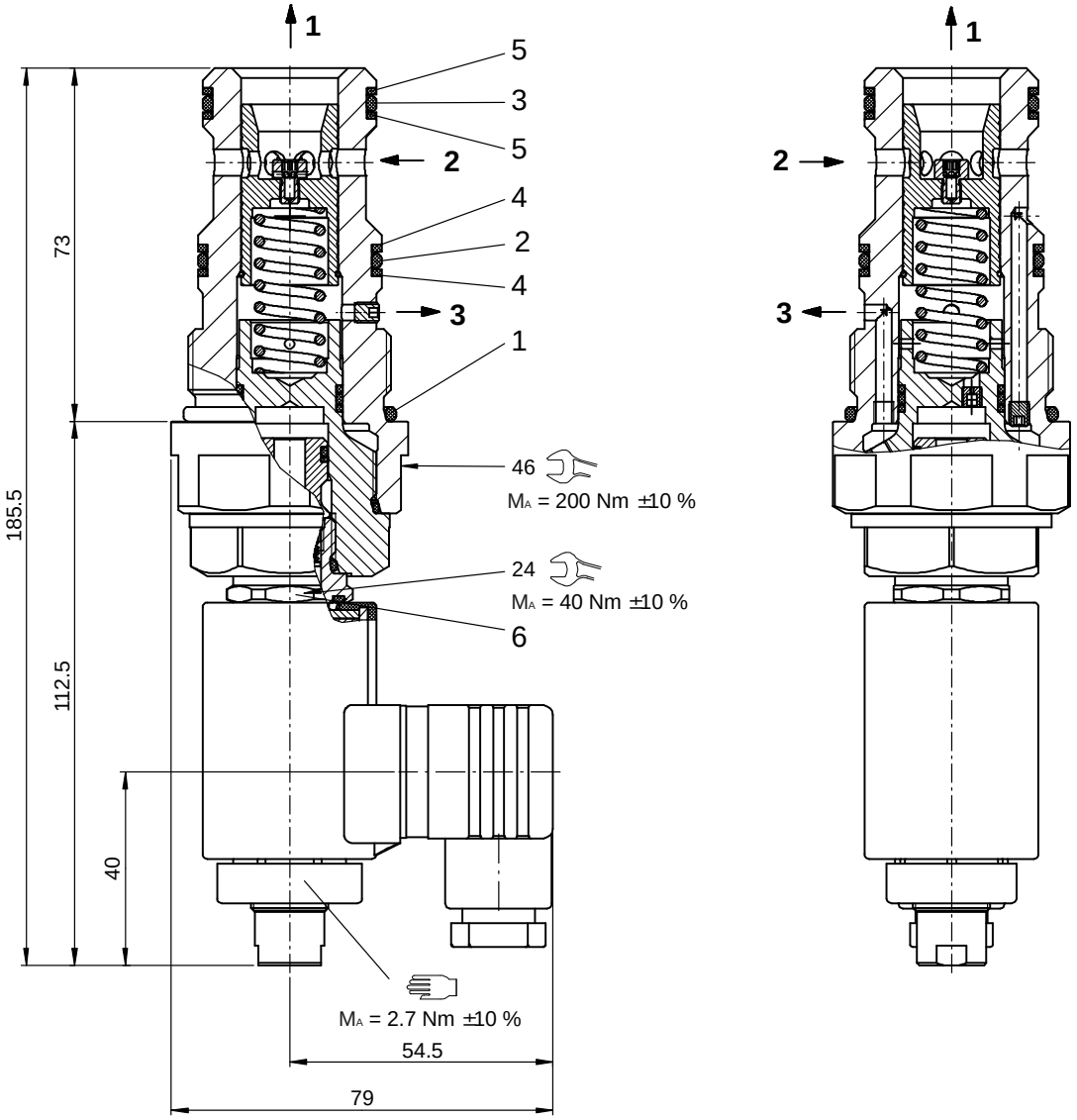

Seal kit NBR no. DS-358-N [1)]

Item	Qty.	Description
1	1	O-ring no. 129 ∅ 39.34 x 2.62 N90
2	1	O-ring no. 125 ∅ 32.99 x 2.62 N90
3	1	O-ring no. 124 ∅ 31.42 x 2.62 N90
4	2	Backup ring ∅ 32.00 x 2.00 x 1.40 FI0751
5	2	Backup ring ∅ 30.00 x 2.00 x 1.40 FI0751
6	1	Seal kit NBR no. DS-355-N / seal kit with FKM (Viton) seals no. DS-355-V

IMPORTANT!

1) Seal kit with FKM (Viton) seals no. DS-358-V

6 Installation information

IMPORTANT!
To achieve the maximum performance rating, fit the solenoid coil as shown (with the plug pins at the bottom) and install the valve in a steel body. When fitting the cartridges, note the mounting attitude (preferably vertical, with coil down → automatic air bleed) and use the specified tightening torque. No adjustments are necessary, since the cartridges are set in the factory.

ATTENTION!
To prevent any pressure surges, port 3 must be routed to tank with the least possible back-pressure. Any tank pressure acting at port B is additive to the pressure setting at the main port A.

ATTENTION!
Only qualified personnel with mechanical skills may carry out any maintenance work. Generally, the only work that should ever be undertaken is to check, and possibly replace, the seals. When changing seals, oil or grease the new seals thoroughly before fitting them.

7 Ordering code

Ex. DRP S B - 5 B - 250 - 16 _ - 1 24 D _

DRP	=	pressure-reducing cartridge, two stage
S	=	standard solenoid (proportional)
A ... Q	=	standard model - see relevant data sheets
Z ... R	=	special features - please consult BUCHER
5	=	pressure function 5 (pressure-reducing, external pilot drain)
D	=	cavity type EB
350	=	pressure range …350 bar
250	=	pressure range …250 bar
160	=	pressure range …160 bar
100	=	pressure range …100 bar
040	=	pressure range … 40 bar
10	=	nominal size 16
(blank)	=	NBR (Nitrile) seals (**standard**)
V	=	FKM (Viton) seals (special seals - please contact BUCHER)
1 ... 9	=	design stage (omit when ordering new units)
...	=	voltage e.g. **24** (24 V)
D	=	current DC
(blank)	=	DIN EN 175301-803 connection with mating plug (**standard, IP 65**)
M100	=	DIN EN 175301-803 connection without mating plug
C	=	Kostal plug connection (IP 65)
JT	=	Junior Timer radial plug connection (with protection diode, IP65)
IT	=	Junior Timer axial plug connection (with protection diode, IP65)
D	=	Deutsch plug connection 45° DT04-2P (IP67/69K)
DT	=	Deutsch plug connection 45° DT04-2P (with protection diode, IP67/69K)
S	=	AMP Superseal 1.5 (IP67) / Metri-Pack 150 (IP65) plug connection
F	=	flying leads (500 mm)

} mating plug not supplied

8 Related data sheets

Reference	(Old no.)	Description
400-P-040011	(i-32)	The form-tool hire programme
400-P-080111	(i-55.2)	Cavity type EB
400-P-120110	(W-2.141)	Coils for screw-in cartridge valves series D36
400-P-580101		Pilot valve DVSA-1L
400-P-750115	(G-29.22)	Line- and manifold-mounting body, type GEBAA (G 1”)

info.ch@bucherhydraulics.com www.bucherhydraulics.com

© 2023 by Bucher Hydraulics AG Frutigen, CH-3714 Frutigen
All rights reserved.
Data is provided for the purpose of product description only, and must not be construed as warranted characteristics in the legal sense. The information does not relieve users from the duty of conducting their own evaluations and tests. Because the products are subject to continual improvement, we reserve the right to amend the product specifications contained in this catalogue.

Classification: 430.305.300.305.330.310

Electrically Operated Pressure-Reducing Cartridge, Size 10

Q_{max} = 140 l/min (37 gpm), p_{max} = 350 bar (5000 psi)
seated pilot stage, spool-type design, with external pilot-oil drain Z
Series WDRVPC-5…

- Compact construction for cavity type DD – M24x1.5 to Bucher standard
- 2-pressure switching HI / LO
- With external pilot-oil drain Z
- High pressure wet-armature solenoids
- The slip-on coil can be rotated, and it can be replaced without opening the hydraulic envelope
- Various plug-connector systems and voltages are available
- All exposed parts with zinc-nickel plating
- Can be fitted in a line-mounting body

1 Description

Serie WDRVPC-5… valves are size 10 electrically operated pressure-reducing cartridges with an M24x1.5 mounting thread. They have a seated pilot stage and a spool-type main stage. Using the external pressure adjustment, the higher reducing pressure p1 and the lower reducing pressure p2 can be varied smoothly and independently of one another without opening the hydraulic envelope, and either pressure can be selected. When the pilot stage is active (pressure-reducing-function), pilot oil is drained externally to port Z. Port B can therefore be pressurised without that pressure being additive to the valve pressure setting. All external parts of the cartridge are zinc-nickel plated to DIN 50 979 and are thus suitable for use in the harshest operating environments. If you intend to manufacture your own cavities or are designing a line-mounting installation, please refer to the section “Related data sheets”.

2 Symbol

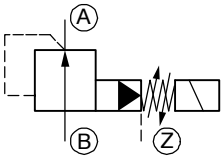

3 Technical data

General characteristics	Description, value, unit	
Designation	pressure-reducing cartridge valve	
Design	Spool-type design, seated pilot, with external pilot-oil drain Z, electrically operated	
Mounting method	screw-in cartridge M24 x 1.5	
Size	nominal size 10, cavity type DD to Bucher standard	
Weight	0.53 kg	(1.17 lb)
Mounting attitude	unrestricted	
Ambient temperature range	-25 °C … +50 °C	(-13 °F … +122 °F)

Hydraulic characteristics	Description, value, unit	
Maximum operating pressure in port A and B	350 bar	(5000 psi)
Maximum allowable pressure in port Z (tank)	250 bar	(3600 psi)

WWW.SUMY.IR

Hydraulic characteristics	Description, value, unit
Pressure adjustment range:	350 bar (5000 psi) 250 bar (3600 psi) 160 bar (2300 psi) 100 bar (1400 psi) 40 bar (570 psi)
Maximum flow rate	140 l/min (37 gpm)
Flow direction	B → A, see symbols
Hydraulic fluid	HL and HLP mineral oil to DIN 51 524; for other fluids, please contact BUCHER
Hydraulic fluid temperature range	-25 °C … +80 °C (-13 °F … +176 °F)
Viscosity range	10…500 mm^2/s (cSt), recommended 15...250 mm^2/s (cSt)
Minimum fluid cleanliness Cleanliness class to ISO 4406 : 1999	class 20/18/15

Electrical characteristics	Description, value, unit
Supply voltage	12 V DC, 24 V DC / 115 V AC, 230 V AC (50 … 60 Hz)
Supply voltage tolerance	± 10 %
Nominal power consumption	V DC = 27 W V AC = 25 W
Relative duty cycle	100 %
Protection class to ISO 20 653 / EN 60 529	IP 65 / IP 67 / IP 69K, see “Ordering code” (with appropriate mating connector and proper fitting and sealing)
Electrical connection	DIN EN 175301-803, 3-pin 2 P+E (standard) for other connectors, see “Ordering code”

4 Performance graphs

measured with oil viscosity 33 mm²/s (cSt)

2-pressure switching (HI/LO) – WDRVPC-…

p = f (Q) Pressure-drop characteristic (350 bar)

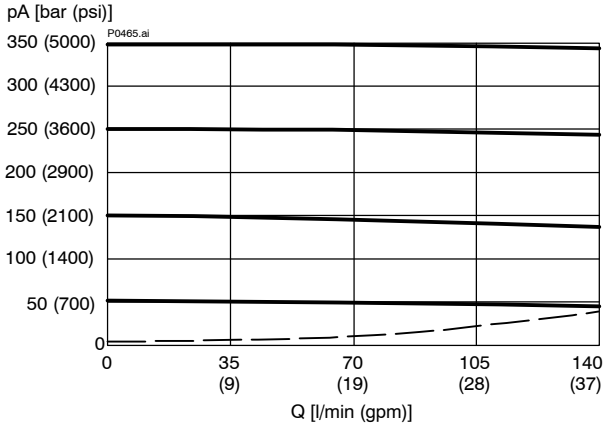

p = f (Q) Pressure-drop characteristic (250 bar)

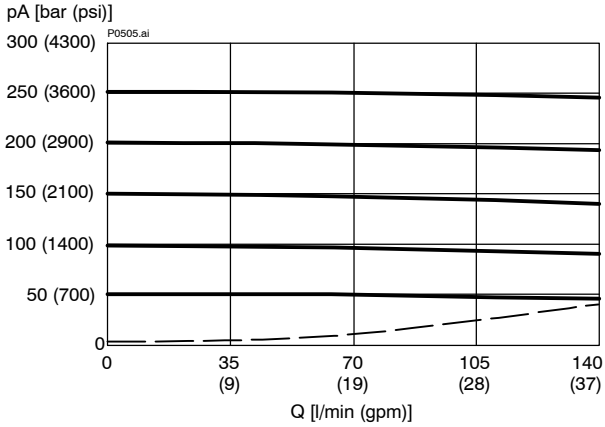

p = f (Q) Pressure-drop characteristic (160 bar)

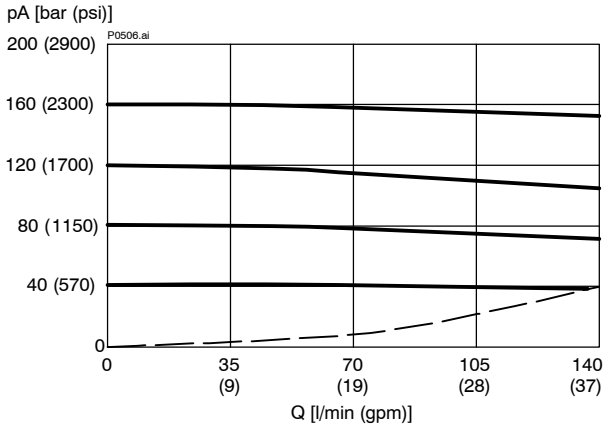

p = f (Q) Pressure-drop characteristic (100 bar)

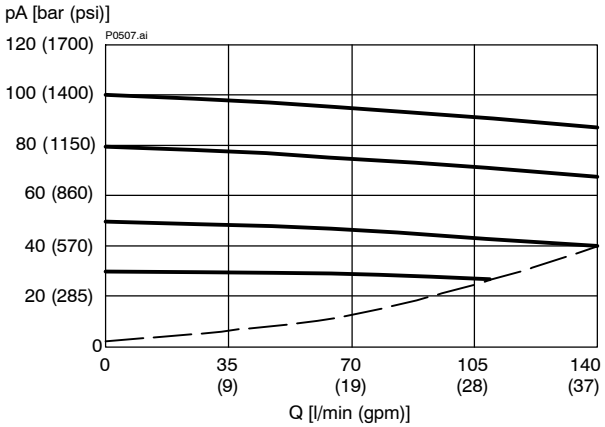

p = f (Q) Pressure-drop characteristic (40 bar)

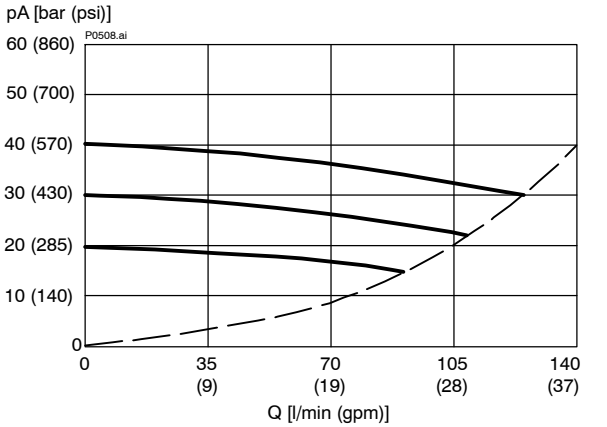

application limit / minimum bypass pressure

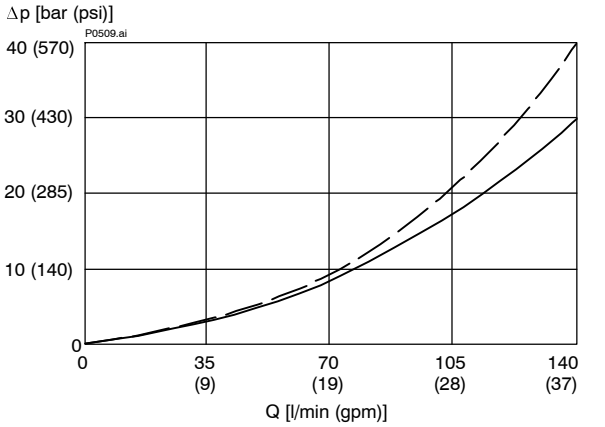

– – – – Δp B → A / energised

——— p2 min. = application limit / minimum bypass pressure

5 Dimensions & sectional view

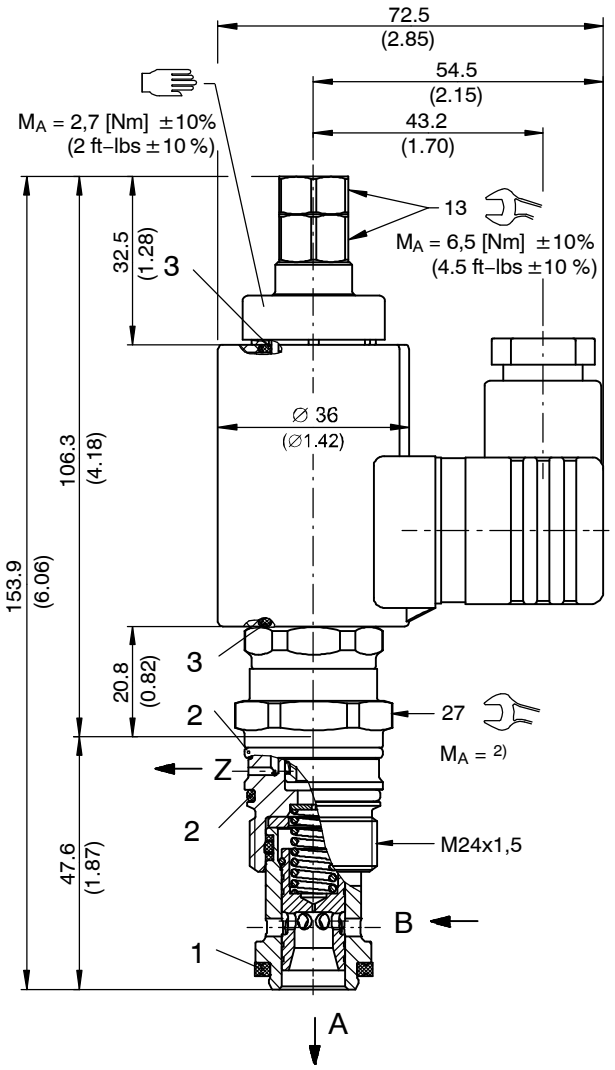

Seal kit NBR no. DS-261-N 3)

Item	Qty.	Description		
1	1	Seal ring	∅ 22,10 / 16,50 x 2,50	
2	2	O-ring no. 020	∅ 21,95 x 1,78	N90
3	2	O-ring	16,00 x 2,00	V83

IMPORTANT!

3) Seal kit with FKM (Viton) seals, no. DS-261-V

Tightening torque M_A 2) ± 10 %

Cavity type	DD
When fitted in steel	65 [Nm] (50 [ft-lbs])
When fitted in aluminium	50 [Nm] (35 [ft-lbs])

6 Installation information

IMPORTANT!
When fitting the cartridges, use the specified tightening torque.

ATTENTION!
Only qualified personnel with mechanical skills may carry out any maintenance work. Generally, the only work that should ever be undertaken is to check, and possibly replace, the seals. When changing seals, oil or grease the new seals thoroughly before fitting them.

7 Pressure adjustment

(pressure p1 must be set first, followed by pressure p2)

Nr.	Setting the higher pressure p1 on series WDRVPC… as the higher working pressure with solenoid energised:
1)	Slacken and remove cap nut item A (13 A/F).
2)	Slacken lock nut item D (13 A/F) approx. ½ turn.
3)	With pump running and with the solenoid energised, use the two flats (7 A/F) to turn adjusting screw item B until the required pressure is set in port A.
4)	Hold the adjusting screw item B using the 7 A/F flats while tightening the lock nut item D (13 A/F).
5)	Refit and tighten the cap nut item A.

Nr.	Setting the lower pressure p2 on series WDRVPC… (a second pressure or alternatively, unload) with solenoid deenergised:
1)	Slacken and remove cap nut item A (13 A/F).
2)	With pump running and with the solenoid deenergised, use the adjusting screw item C (2.5 A/F hex. Socket) to set the pressure p2 in port A.
3)	Refit and tighten the cap nut item A. (p2 min.: 0 … 30 bar for WDRVPC, dependent on flow).

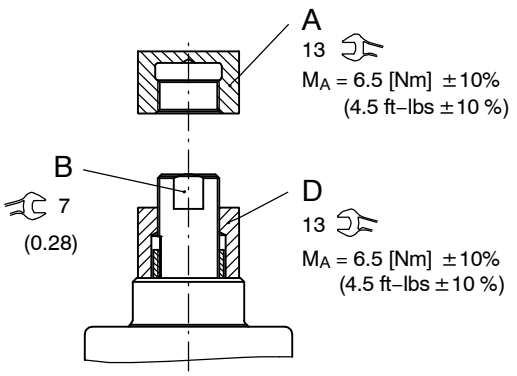

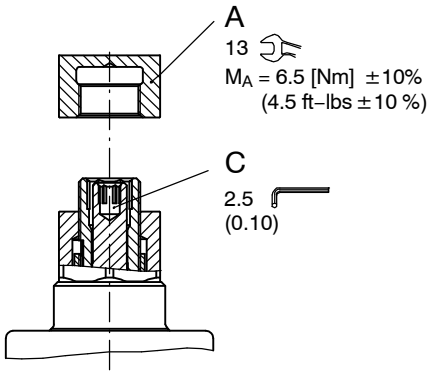

ATTENTION!
When setting pressure p1, adjusting screw item B must not be overtightened as this can damage the shoulder which limits the maximum pressure setting. As soon as a definite end-stop can be felt, do not turn any further.

8 Ordering code

Ex. WDR V P C - 5 D O - 35 - 10 _ - 1 24 D _

WDR	=	electr. operated pressure-reducing valve
V	=	seated two-stage
P	=	cartridge design
C ... Q	=	standard model per relevant data sheet
Y ... R	=	special features - please consult BUCHER
5	=	pressure function 5 (with external pilot-oil drain Z)
D	=	cavity type DD
O	=	nominally open
35	=	pressure range 10 … 350 bar
25	=	pressure range 10 … 250 bar
16	=	pressure range 10 … 160 bar
10	=	pressure range 10 … 100 bar
04	=	pressure range 10 … 040 bar
10	=	nominal size 10
(blank)	=	NBR (Nitrile) seals (**standard**)
V	=	FKM (Viton) seals (special seals - please contact BUCHER)
1 ... 9	=	design stage (omit when ordering new units)
...	=	voltage e.g. **24** (24 V)
D	=	current DC
A	=	current AC
(blank)	=	DIN EN 175301-803 connection with mating plug (**standard, IP 65**)
M100	=	DIN EN 175301-803 connection without mating plug
C	=	Kostal plug connection (IP 65)
JT	=	Junior Timer radial plug connection (with protection diode, IP65)
IT	=	Junior Timer axial plug connection (with protection diode, IP65)
D	=	Deutsch plug connection DT04-2P (IP 67/69K)
DT	=	Deutsch plug connection DT04-2P (with protection diode, IP 67/69K)
S	=	AMP Superseal 1.5 (IP67) / Metri-Pack 150 (IP65) plug connection
F	=	flying leads (500 mm)

mating plug not supplied

9 Related data sheets

Reference (Old no.)	Description
400-P-040011	The form-tool hire programme
400-P-060121	Cavity type DD
400-P-120110	Coils for screw-in cartridge valves
400-P-740111	Line- and manifold-mounting body, type DDY-12 (G 1/2")

info.ch@bucherhydraulics.com www.bucherhydraulics.com

© 2018 by Bucher Hydraulics AG Frutigen, CH-3714 Frutigen
All rights reserved.
Data is provided for the purpose of product description only, and must not be construed as warranted characteristics in the legal sense. The information does not relieve users from the duty of conducting their own evaluations and tests. Because the products are subject to continual improvement, we reserve the right to amend the product specifications contained in this catalogue.

Classification: 430.305.300.305.320.300

Electrically Operated Pressure-Reducing Cartridge, Size 16

Q_{max} = 250 l/min (66 gpm), p_{max} = 350 bar (5000 psi)
seated pilot stage, spool-type design, with external pilot-oil drain 3
Series WDRVPB-5…

- Compact construction for cavity type EB – M42x2 to ISO 7789-42-06-0-07
- 2-pressure switching HI / LO
- With external pilot-oil drain 3
- High pressure wet-armature solenoids
- The slip-on coil can be rotated, and it can be replaced without opening the hydraulic envelope
- Various plug-connector systems and voltages are available
- All exposed parts with zinc-nickel plating
- Can be fitted in a line-mounting body

1 Description

Series WDRVPB-5… valves are size 16 electrically operated pressure-reducing cartridges with an M42x2 mounting thread. They have a seated pilot stage and a spool-type main stage. Using the external pressure adjustment, the higher reducing pressure p1 and the lower reducing pressure p2 can be varied smoothly and independently of one another without opening the hydraulic envelope, and either pressure can be selected. When the pilot stage is active (pressure-reducing function), pilot oil is drained externally to port 3. Port 2 can therefore be pressurised without that pressure being additive to the valve pressure setting. All external parts of the cartridge are zinc-nickel plated according to DIN EN ISO 19 598 and are thus suitable for use in the harshest operating environments. The slip-on coils can be replaced without opening the hydraulic envelope and can be positioned at any angle through 360°. For self-assembly, please refer to the section related data sheets.

2 Symbol

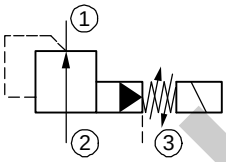

3 Technical data

General characteristics	Description, value, unit	
Designation	pressure-reducing cartridge valve	
Design	spool-type design, seated pilot, electrically operated, with external pilot oil drain to 3	
Mounting method	screw-in cartridge M42 x 2	
Tightening torque	200 Nm ± 10 %	(150 ft-lbs ± 10 %)
Size	nominal size 16, cavity type EB to ISO 7789-42-06-0-07	
Weight	1.25 kg	(2.75 lb)
Mounting attitude	unrestricted	
Ambient temperature range	-25 °C … +50 °C	(-13 °F … +122 °F)

Phase Out

WWW.SUMY.IR

Hydraulic characteristics	Description, value, unit	
Maximum operating pressure in port 1 and 2	350 bar	(5000 psi)
Maximum allowable pressure in port 3 (tank)	250 bar	(3600 psi)
Pressure adjustment range:	10 … 350 bar 10 … 250 bar 10 … 160 bar 10 … 100 bar 10 … 40 bar	(5000 psi) (3600 psi) (2300 psi) (1400 psi) (570 psi)
Maximum flow rate	250 l/min	(66 gpm)
Flow direction	2 → 1, see symbols	
Hydraulic fluid	HL and HLP mineral oil to DIN 51 524; for other fluids, please contact BUCHER	
Hydraulic fluid temperature range	-25 °C … +80 °C	(-13 °F … +176 °F)
Viscosity range	10…500 mm^2/s (cSt), recommended 15...250 mm^2/s (cSt)	
Minimum fluid cleanliness Cleanliness class to ISO 4406 : 1999	class 20/18/15	

Electrical characteristics	Description, value, unit
Supply voltage	12 V DC, 24 V DC / 115 V AC, 230 V AC (50 … 60 Hz)
Supply voltage tolerance	± 10 %
Nominal power consumption	V DC = 27 W V AC = 25 W
Switching time	50 … 300 ms (energising) … ≤ 30 ms (de-energising) Depending on pressure, flow rate, pressure drop and viscosity as well as dwell time under pressure, the switching times may vary from the the stated values.
Relative duty cycle	100 %
Protection class to ISO 20 653 / EN 60 529	IP 65 / IP 67 / IP 69K, see “Ordering code” (with appropriate mating connector and proper fitting and sealing)
Electrical connection	DIN EN 175301-803, 3-pin 2 P+E (standard) for other connectors, see “Ordering code”

Phase-Out

4 Performance graphs

measured with oil viscosity 33 mm²/s (cSt)

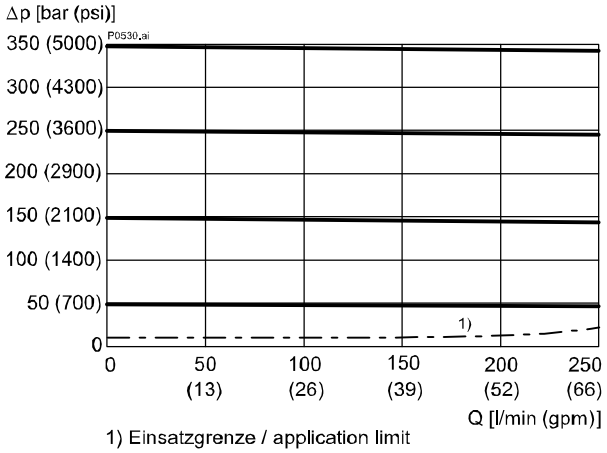

Δp = f (Q) Pressure-drop characteristic (350 bar)

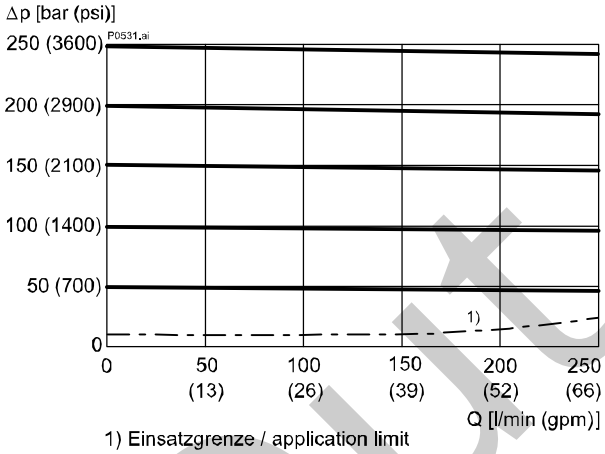

Δp = f (Q) Pressure-drop characteristic (250 bar)

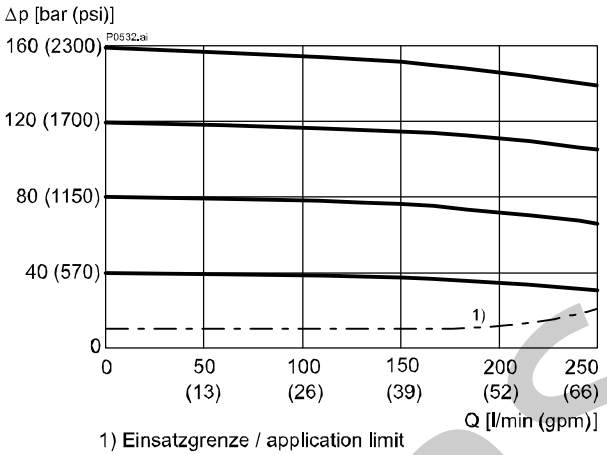

Δp = f (Q) Pressure-drop characteristic (160 bar)

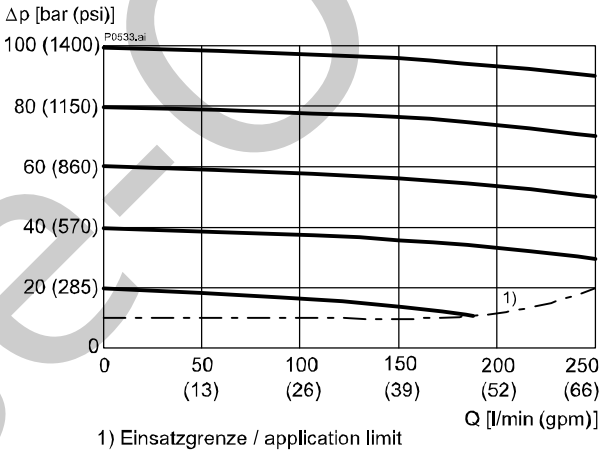

Δp = f (Q) Pressure-drop characteristic (100 bar)

Δp = f (Q) Pressure-drop characteristic (40 bar)

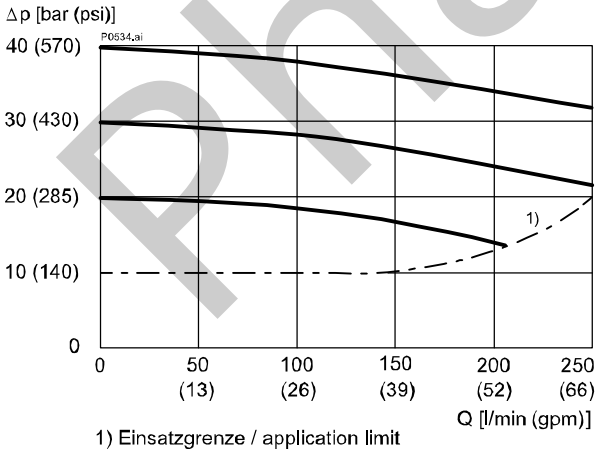

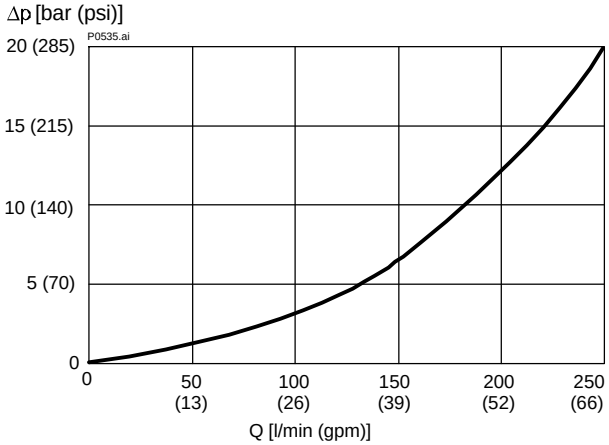

Δp = f (Q) Pressure-drop - Flow rate characteristic (all pressure ranges)

Phase-Out

5 Dimensions & sectional view

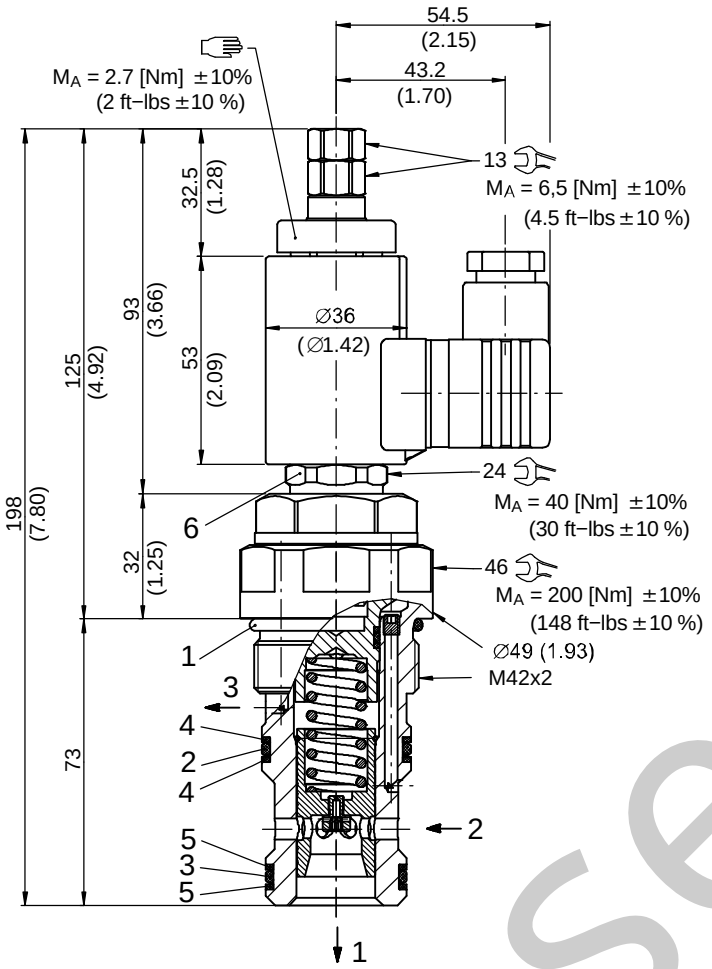

Seal kit NBR no. DS-357-N 2)

Item	Qty.	Description
1	1	O-ring no. 129 ∅ 39.34 x 2.62 N90
2	1	O-ring no. 125 ∅ 32.99 x 2.62 N90
3	1	O-ring no. 124 ∅ 31.42 x 2.62 N90
4	2	Backup ring ∅ 32.00 x 2.00 x 1.40 FI0751
5	2	Backup ring ∅ 30.00 x 2.00 x 1.40 FI0751
6	1	Seal kit NBR DS-317-N

IMPORTANT!

2) Seal kit with FKM (Viton) seals, no. DS-357-V

6 Installation information

IMPORTANT!
When fitting the cartridges, use the specified tightening torque.

ATTENTION!
Only qualified personnel with mechanical skills may carry out any maintenance work. Generally, the only work that should ever be undertaken is to check, and possibly replace, the seals. When changing seals, oil or grease the new seals thoroughly before fitting them.

Phase-Out

7 Pressure adjustment

(pressure p1 must be set first, followed by pressure p2)

Nr.	Setting the higher pressure p1 on series WUVB… as the higher working pressure with solenoid energised:
1)	Slacken and remove cap nut item A (13 A/F).
2)	Slacken lock nut item D (13 A/F) approx. ½ turn.
3)	With pump running and with the solenoid energised, use the two flats (7 A/F) to turn adjusting screw item B until the required pressure is set in port 1.
4)	Hold the adjusting screw item B using the 7 A/F flats while tightening the lock nut item D (13 A/F).
5)	Refit and tighten the cap nut item A.

Nr.	Setting the lower pressure p2 (emergency pressure setting) on series WUVB… (a second pressure or alternatively, unload) with solenoid de-energised:
1)	Slacken and remove cap nut item A (13 A/F).
2)	With pump running and with the solenoid de-energised, use the adjusting screw item C (2.5 A/F hex. socket) to set the pressure p2 in port 1.
3)	Refit and tighten the cap nut item A. (p2 min.: 11 … 35 bar, dependent on flow).

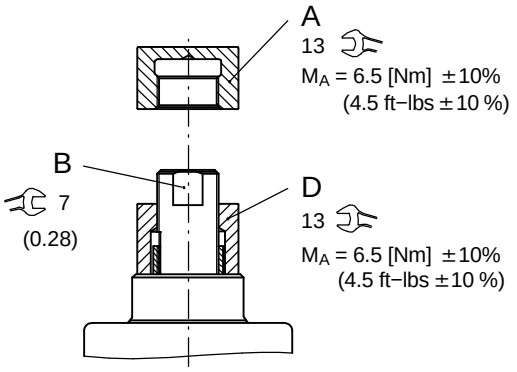

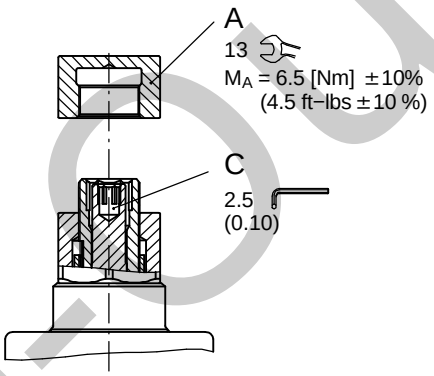

ATTENTION!
When setting pressure p1, adjusting screw item B must not be overtightened as this can damage the shoulder which limits the maximum pressure setting. As soon as a definite end-stop can be felt, do not turn any further.

Example – showing the adjustable pressures p1 and p2:

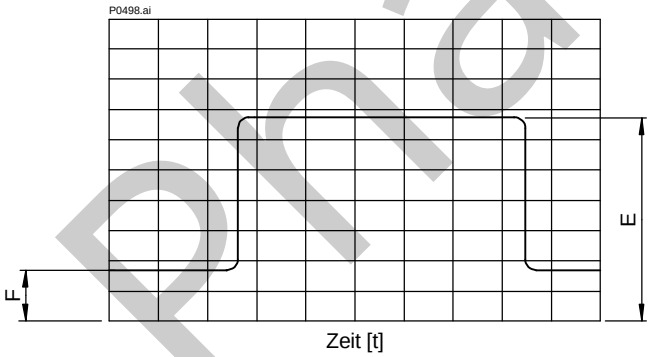

E = pressure p1; as set with item B, solenoid energised
F = pressure p2, max. as E, adjustable at item C, solenoid de-energised

---

The relief pressure p1 is set as the higher working pressure (E) (solenoid energised)
p2 as the lower working pressure (F) (solenoid de-energised)

Phase-Out

8 Ordering code

Ex. WDR V P B - 5 B O - 35 - 16 _ - 1 24 D _

WDR	=	electr. operated pressure-reducing valve
V	=	two-stage
P	=	cartridge design
B ... Q	=	standard model per relevant data sheet
Y ... R	=	special features - please consult BUCHER
5	=	pressure function 5 (with external pilot-oil drain 3)
B	=	cavity type EB
O	=	normally open
35	=	pressure range 10 … 350 bar
25	=	pressure range 10 … 250 bar
16	=	pressure range 10 … 160 bar
10	=	pressure range 10 … 100 bar
04	=	pressure range 10 … 040 bar
16	=	nominal size 16
(blank)	=	NBR (Nitrile) seals (**standard**)
V	=	FKM (Viton) seals (special seals - please contact BUCHER)
1 ... 9	=	design stage (omit when ordering new units)
...	=	voltage e.g. **24** (24 V)
D	=	current DC
A	=	current AC
(blank)	=	DIN EN 175301-803 connection with mating plug (**standard, IP 65**)
M100	=	DIN EN 175301-803 connection without mating plug
C	=	Kostal plug connection (IP 65)
JT	=	Junior Timer radial plug connection (with protection diode, IP65)
IT	=	Junior Timer axial plug connection (with protection diode, IP65)
D	=	Deutsch plug connection 45° DT04-2P (IP67/69K)
DT	=	Deutsch plug connection 45° DT04-2P (with protection diode, IP67/69K)
S	=	AMP Superseal 1.5 (IP67) / Metri-Pack 150 (IP65) plug connection
F	=	flying leads (500 mm)

mating plug not supplied

9 Related data sheets

Reference (Old no.)	Description
400-P-040011	The form-tool hire programme
400-P-080111	Cavity type EB
400-P-120110	Coils for screw-in cartridge valves
400-P-287101	Electrically Operated Pressure-Relief Cartridge, Size 1, type WUVB-1
400-P-309501	Stack mounting pressure-reducing valve, ISO Size 07, type SWDRVPB-5
400-P-750115	Line- and manifold-mounting body, type GEBAA (M42x2)

info.ch@bucherhydraulics.com www.bucherhydraulics.com

© 2023 by Bucher Hydraulics AG Frutigen, CH-3714 Frutigen
All rights reserved.
Data is provided for the purpose of product description only, and must not be construed as warranted characteristics in the legal sense. The information does not relieve users from the duty of conducting their own evaluations and tests. Because the products are subject to continual improvement, we reserve the right to amend the product specifications contained in this catalogue.

Classification: 430.305.305.305.330.300

Phase-Out

BUCHER hydraulics

WWW.SUMY.IR

Pressure valve
Reducing function

Q_{max} = 40 l/min, p_{max} = 315 bar
direct acting, poppet type, mechanical operation
Type series: DDRA-5L-...

- Screw-in cartridge valve
- For cavity AL
- All external parts with zinc-nickel plating according to DIN EN ISO 19598
- Installation in threaded port body type GALA
- Excellent stability over the whole pressure and flow range
- Sensitive adjustment
- Available with hand-knob or tamper-proof cap

Description

These two-stage pressure valves, series DDRA-5L-..., are size 5, screw-in cartridge valves with a seated pilot stage and an 3/4-16 UNF-2A mounting thread. They are designed on the proven sliding-spool principle. The spring chamber is atmospherically relieved. To obtain a reliable pressure setting over the entire pressure range, the overall pressure range is divided into different pressure levels. These valves are mainly used in certain mobile and industrial applications to reduce the system pressure. The pressure is set by means of an adjusting spindle. All external parts of the screw-in valves are zinc-nickel plated and are thus suitable for use in the harshest operating environments. For installation and further information, please refer to the section related data sheets.

Symbol

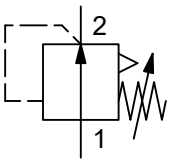

Technical data

General characteristics	Description, value, unit
Function group	Pressure valve
Function	Reducing function
Design	Screw-in cartridge valve

WWW.SUMY.IR

General characteristics	Description, value, unit
Controls	mechanical operation
Characteristic	direct acting, poppet type
MTTFd value	150 years
Construction size	NG 5
Thread size	3/4-16 UNF-2A
Mounting attitude	unrestricted
Weight	0.20 kg
Cavity acc. factory standard	For cavity AL
Tightening torque steel	50 Nm
Tightening torque aluminium	50 Nm
Tightening torque tolerance	± 10 %
Minimum ambient temperature	- 30 °C
Maximum ambient temperature	+ 80 °C
Surface protection	All external parts with zinc-nickel plating according to DIN EN ISO 19598
Sealing material	see ordering code
Seal kit order number	NBR: DS-450-N / FKM: DS-450-V

Hydraulic characteristics	Description, value, unit
Maximum operating pressure	315 bar
Restriction of the operating pressure	port 2 = 250 bar
Maximum flow rate	40 l/min
Flow direction	see symbol
Hydraulic fluid	HL and HLP mineral oil according to DIN 51 524; other fluids on request!
Minimum fluid temperature	- 30 °C
Maximum fluid temperature	+ 80 °C
Viscosity range	10 ... 650 mm^2/s (cSt)
Recommended viscosity range	15 ... 250 mm^2/s (cSt)
Minimum fluid cleanliness (cleanlineless class according to ISO 4406:1999)	class 20/18/15
Opening pressure	60 /100 / 160 / 250 bar
Pressure adjustment range	pressure range 20...60 bar: 1 turn = ca. 16 bar pressure range 30...100 bar: 1 turn = ca. 24 bar pressure range 40...160 bar: 1 turn = ca. 32 bar pressure range 50...250 bar: 1 turn = ca. 39 bar
Internal leakage flow rate	< 0,2 cm^3/min (max. 5 drops/min) with oil viscositt 33 mm^2/s (cSt)

ATTENTION!
If there is pressure at the secondary connection, this is added to the set pressure value.

BUCHER hydraulics
WWW.SUMY.IR

Performance graphs

measured with oil viscosity 33.0 mm²/s (cSt)

p = f (Q) Pressure-flow rate

Pressure range 20...60 bar

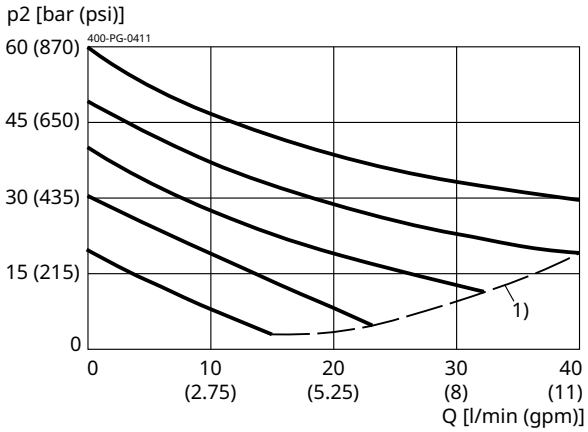

p_N = 60 bar (870 psi)
1) Einsatzgrenze / Application limit

p = f (Q) Pressure-flow rate

Pressure range 30...100 bar

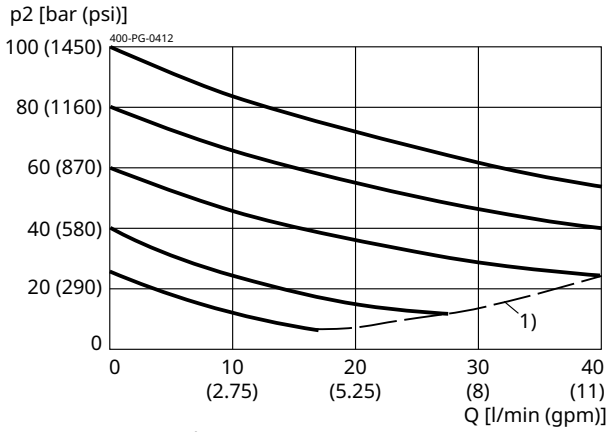

p_N = 100 bar (1450 psi)
1) Einsatzgrenze / Application limit

p = f (Q) Pressure-flow rate

Pressure range 40...160 bar

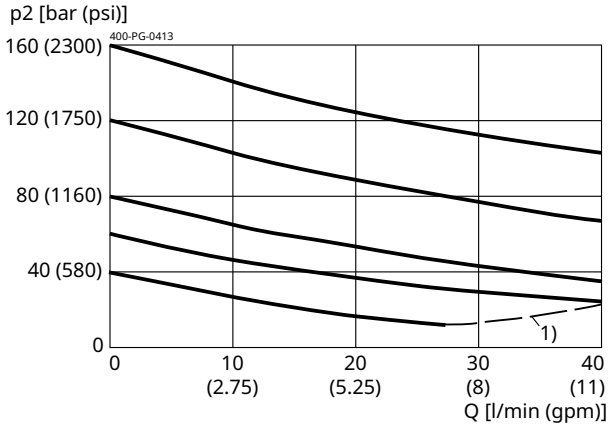

p_N = 160 bar (2300 psi)
1) Einsatzgrenze / Application limit

p = f (Q) Pressure-flow rate

Pressure range 50...250 bar

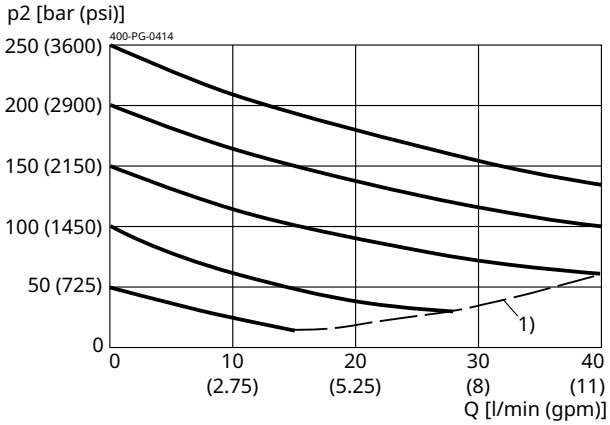

p_N = 250 bar (3600 psi)
1) Einsatzgrenze / Application limit

Dimensions and sectional view

Beispiel für die Masseinheit:
Exampel for the dimensional units:

0.79	= 0.79 mm	millimeter
(.031)	= 0.031"	inch

Version "S": Einstellschraube mit Innensechskant (Standard)
Version "S": adjustment screw with internal hexagon (standard)

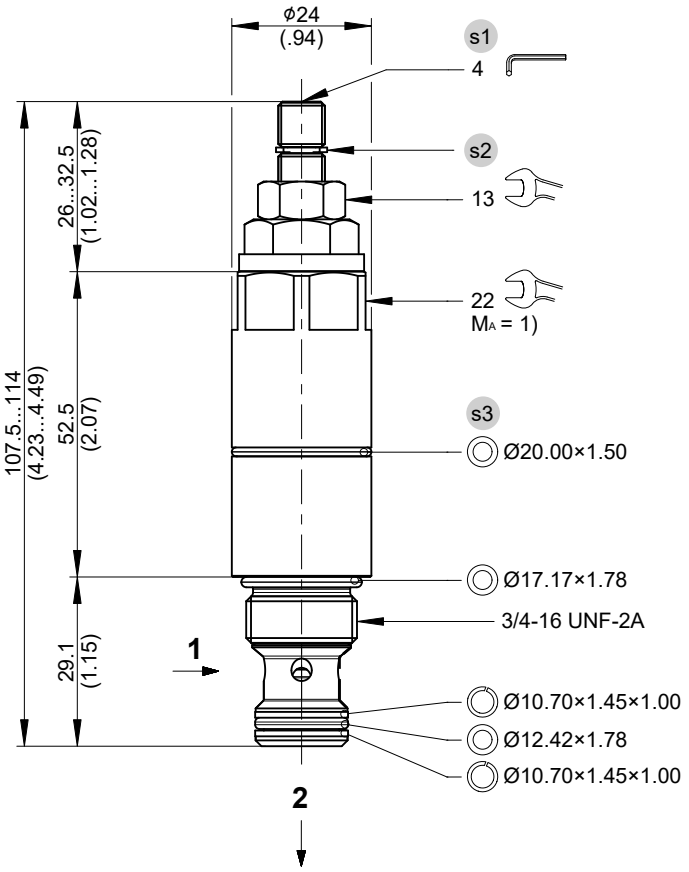

Version "H": Einstellschraube mit Handrad
Version "H": adjustment screw with handknob

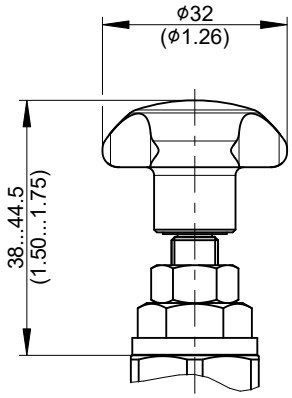

Einstellschraube mit Sicherungskappe
adjustment screw with tamper-proof cap

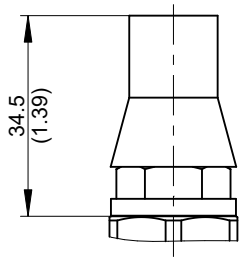

Installation information

NOTE!
1) When fitting the screw-in cartridge valve, use the specified tightening torque. The value can be found in the chapter "Technical data".

NOTE!
Set the required pressure with the adjusting screw s1 . After you have set the valve, lock the adjusting screw s1 with the lock nut.

IMPORTANT!
Due to the atmospheric venting (s3), an external leakage cannot be ruled out. Depending on the application, external influences and duration of use, this oil volume might vary. To collect the oil in the spring chamber, a vertical installation orientation is recommended.

NOTE!
Valve settings can be sealed by fitting the tamper-proof cap. To fit the cap, the snap ring s2 has to be removed. Subsequent adjustment is only possible by destroying the tamper-proof cap.

NOTE!
The seals are not available individually. The seal kit order number can be found in the chapter "Technical data".

ATTENTION!
Only qualified personnel with mechanical skills may carry out any maintenance work. Generally, the only work that should ever be undertaken is to check, and possibly replace, the seals. When changing seals, oil or grease the new seals thoroughly before fitting them.

Ordering code

Ex. D | DR | A - 5 | L - 5 - 25 - S | N - 3

D	=	pressure-control valve
DR	=	direct acting pressure reducing cartridge
A ... Q	=	standard model according to valid data sheet
Z ... R	=	special model (on request)
5	=	pressure-reducing wth external spring space relief
L	=	cavity type AL
5	=	nominal size 5
06	=	pressure range 20...60 bar / 290...870 psi
10	=	pressure range 30...100 bar / 435...1450 psi
16	=	pressure range 40...160 bar / 580...2300 psi
25	=	pressure range 50...250 bar / 725...3600 psi
S	=	adjustment screw with internal hexagon **(standard)**
H	=	adjustment screw with hand knob
N	=	NBR (nitril-butadien-rubber / BUNA) seals **(standard)**
V	=	FKM (fluorocarbon rubber / VITON) seals (special seals on request)
1 ... 9	=	technical design no. (omit by ordering)

IMPORTANT!
When required, the tamper-proof cap (the adjustment seal) must be ordered separately in plain language.

Related data sheets

Reference	Description
400-P-040011	Form tools
400-P-040171	Cavity AL
400-P-720101	Threaded port body GALA
400-P-010101	MTTFd Values for Hydraulic Valves

info.ch@bucherhydraulics.com **www.bucherhydraulics.com**

© 2026 by Bucher Hydraulics AG Frutigen, 3714 Frutigen, Switzerland

All rights reserved.
Data is provided for the purpose of product description only, and must not be construed as warranted characteristics in the legal sense. The information does not relieve users from the duty of conducting their own evaluations and tests. Because the products are subject to continual improvement, we reserve the right to amend the product specifications contained in this catalogue.

BUCHER hydraulics
WWW.SUMY.IR

General information
Cavity

Type series: OA/C1025

Dimensions and sectional view

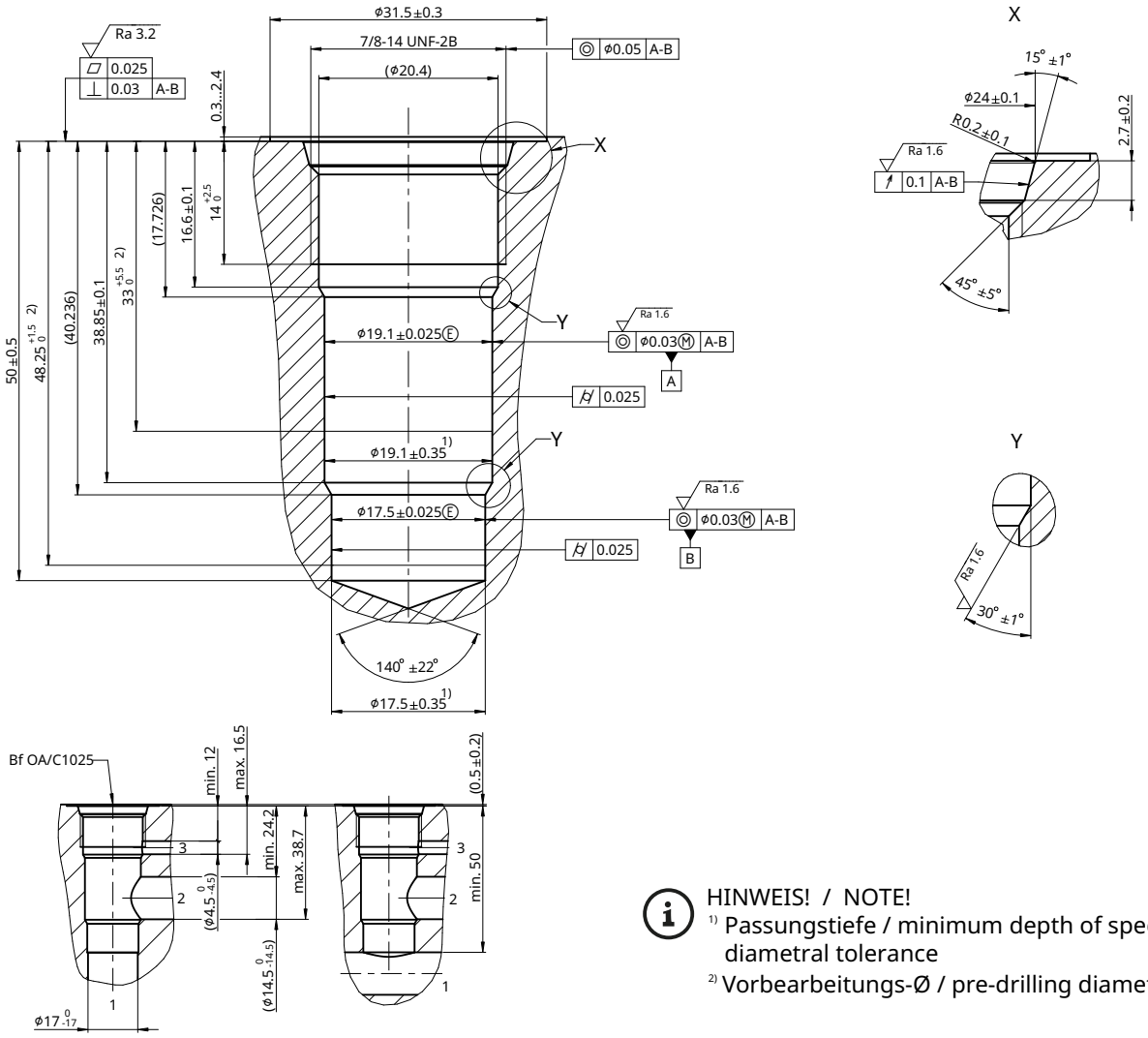

HINWEIS! / NOTE!

1) Passungstiefe / minimum depth of specified diametral tolerance

2) Vorbearbeitungs-Ø / pre-drilling diameters

Installation information

ATTENTION!
You must maintain the specified positional and diametral tolerances. To ensure trouble-free operation of the screw-in cartridges, we strongly recommend that pilot drilling, boring, reaming and cavity thread-cutting are always performed in one setup.

NOTE!
Cavity according to Bucher factory standard (based on ISO/NFPA)

NOTE!
We offer form tool sets for sale or hire. See data sheet 400-P-040011 for further information.

info.ch@bucherhydraulics.com **www.bucherhydraulics.com**

© 2025 by Bucher Hydraulics AG Frutigen, 3714 Frutigen, Switzerland

All rights reserved.
Data is provided for the purpose of product description only, and must not be construed as warranted characteristics in the legal sense. The information does not relieve users from the duty of conducting their own evaluations and tests. Because the products are subject to continual improvement, we reserve the right to amend the product specifications contained in this catalogue.

WWW.SUMY.IR

Pressure valve
Reducing function

Q_{max} = 120 l/min, p_{max} = 350 bar
Pilot operated, spool type, mechanically adjustable
Type series: DRPA-5D-10-...

- Screw-in cartridge valve for cavity DD
- All external parts with zinc-nickel plating according to DIN EN ISO 19598
- Installation in threaded port body type DDY-12
- 2-way with external oil drain
- Very stable operation
- Tightening torque not affecting the function
- Also available as stack valve
- Seated pilot stage

Symbol

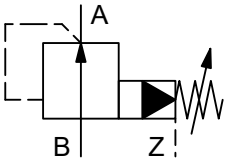

Description

These two-stage pressure valves, series DRPA-5D-10-..., are size 10, screw-in cartridge valves with a seated pilot stage and an M24×1.5 mounting thread. They are designed on the proven sliding-spool principle. The spring chamber is drained with an additional connection. The pressure applied to the secondary connection has no influence on the setting of the valve. To obtain a reliable pressure setting over the entire pressure range, the overall pressure range is divided into different pressure levels. These valves are mainly used in certain mobile and industrial applications to reduce the system pressure. The pressure is set by means of an adjusting spindle. All external parts of the screw-in valves are zinc-nickel plated and are thus suitable for use in the harshest operating environments. For installation and further information, please refer to the section related data sheets.

Technical data

General characteristics	Description, value, unit
Function group	pressure valve
Function	reducing function
Design	screw-in cartridge valve
Controls	mechanically adjustable
Characteristic	pilot operated, spool type
Construction size	NG 10
Thread size	M24×1,5
Mounting attitude	unrestricted
Weight	0.23 kg
Cavity acc. factory standard	DD
Tightening torque steel	65 Nm
Tightening torque aluminium	50 Nm
Tightening torque tolerance	± 10 %
Minimum ambient temperature	- 30 °C
Maximum ambient temperature	+ 80 °C
Surface protection	all external parts with zinc-nickel plating according to DIN EN ISO 19598
Sealing material	see ordering code
Seal kit order number	NBR: DS-216-N / FKM: DS-216-V

Hydraulic characteristics	Description, value, unit
Maximum operating pressure	350 bar
Maximum flow rate	120 l/min
Flow direction	see symbol
Hydraulic fluid	HL and HLP mineral oil according to DIN 51 524; other fluids on request!
Minimum fluid temperature	- 30 °C
Maximum fluid temperature	+ 80 °C
Viscosity range	10 ... 650 mm^2/s (cSt)
Recommended viscosity range	15 ... 250 mm^2/s (cSt)
Minimum fluid cleanliness (cleanliness class according to ISO 4406:1999)	class 20/18/15
Pilot-oil consumption	A to Z: ca. 0.3 l/min
Minimum set pressure	10 bar
Maximum set pressure	350 bar
Pressure adjustment range	pressure range L: 1 turn. = ca. 13 bar pressure range M: 1 turn = ca. 38 bar pressure range N: 1 turn = ca. 65 bar

Performance graphs

measured with oil viscosity 33.0 mm²/s (cSt)

Δp = f (Q) Pressure drop-flow rate characteristic

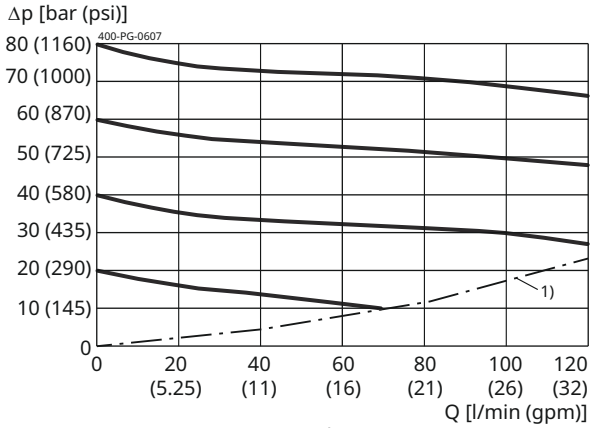

pressure range L: 10...65 bar (145...940 psi)
1) = Application limit

Δp = f (Q) Pressure drop-flow rate characteristic

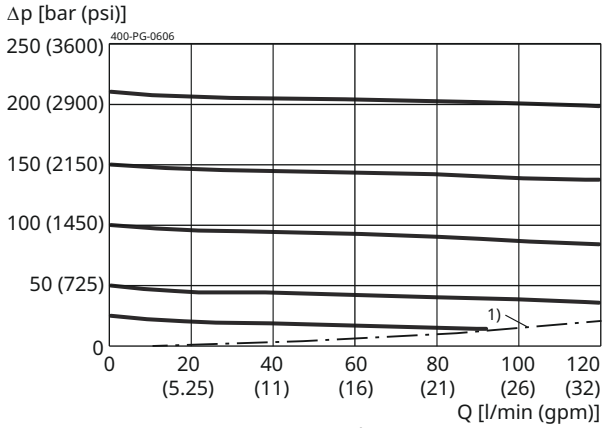

pressure range M: 10...210 bar (145...3000 psi)
1) = Application limit

Δp = f (Q) Pressure drop-flow rate characteristic

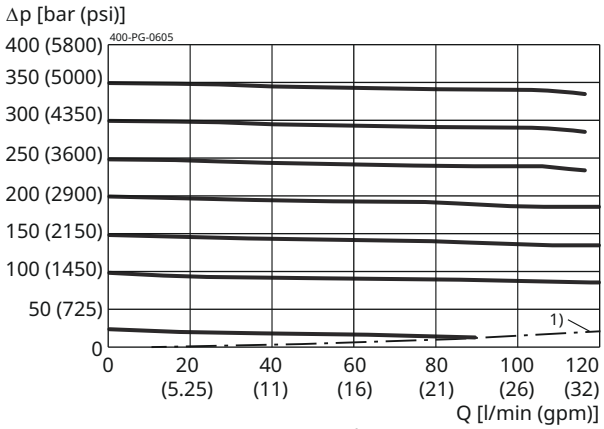

pressure range N: 10...350 bar (145...5000 psi)
1) = Application limit

Installation

Beispiel für die Masseinheit:
Exampel for the dimensional units:

0.79	= 0.79 mm	millimeter
(.031)	= 0.031"	inch

Version "S": Einstellschraube mit Innensechskant (Standard)
Version "S": adjustment screw with internal hexagon (standard)

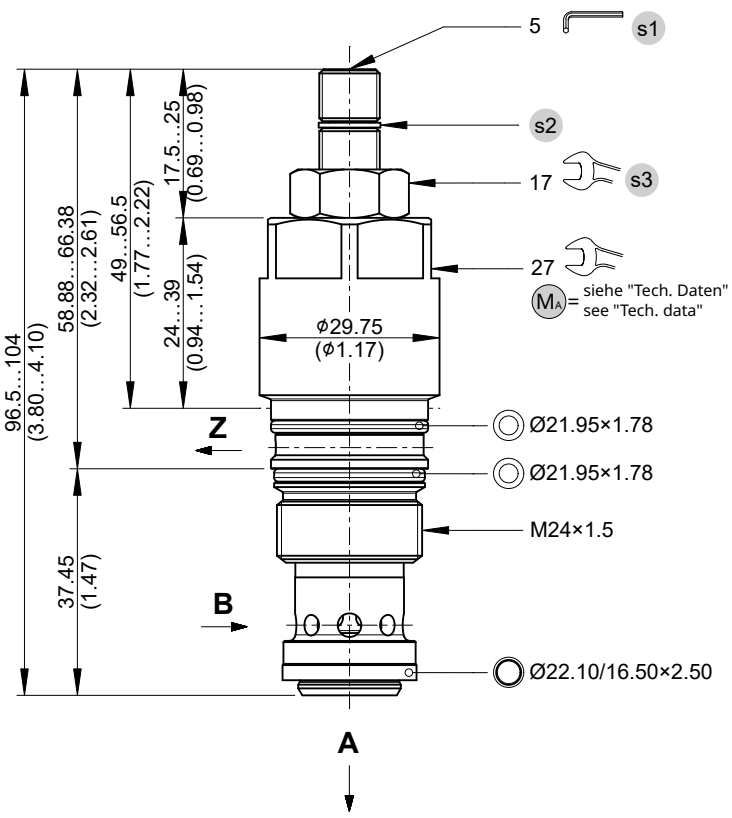

Version "H": Einstellschraube mit Handrad
Version "H": adjustment screw with handknob

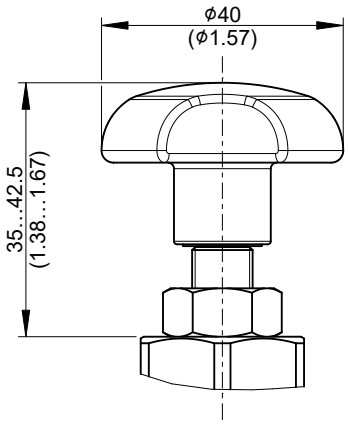

Einstellschraube mit Sicherungskappe
adjustment screw with tamper-proof cap

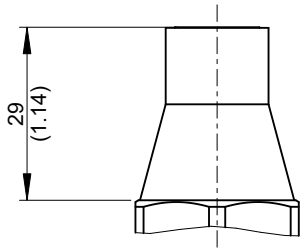

ATTENTION!
Only qualified personnel with mechanical skills may carry out the following work:
- installation and, if necessary, adjustment.
- inspection and, if necessary, replacement of the seals shown in the illustration. New seals must only be installed after being oiled or greased (seal kit; see "Technical Data").

NOTE!
- Observe tightening torque MA .

NOTE!
Set the required pressure with the adjusting screw s1 . After you have set the valve, lock the adjusting screw s1 with the lock nut.

NOTE!
Valve settings can be sealed by fitting the tamper-proof cap. To fit the cap, the snap ring s2 has to be removed. Subsequent adjustment is only possible by destroying the tamper-proof cap.

Ordering code

Ex. D R P A - 5 D - 10 - S N N - 3

D	=	pressure-control valve
R	=	pilot operated
P	=	cartridge design
A ... Q	=	standard model according to valid data sheet
Z ... R	=	special model (on request)
5	=	pressure-reducing with external spring space relief
D	=	cavity type DD
10	=	nominal size 10
S	=	adjustment screw with internal hexagon (standard)
H	=	adjustment screw with hand knob
L	=	pressure range 10...65 bar / 145...940 psi (light spring)
M	=	pressure range 10...210 bar / 145...3000 psi (medium spring)
N	=	pressure range 10...350 bar / 145...5000 psi (normal spring)
N	=	NBR (nitril-butadien-rubber / BUNA) seals (standard)
V	=	FKM (fluorocarbon rubber / VITON) seals (special seals on request)
1 ... 9	=	technical design no. (omit by ordering)

IMPORTANT!
When required, the tamper-proof cap (the adjustment seal) must be ordered separately in plain language.

Related data sheets

Reference	Description
400-P-040011	form tools
400-P-060121	cavity DD
400-P-740112	threaded port body DDY-12

info.ch@bucherhydraulics.com **www.bucherhydraulics.com**

© 2026 by Bucher Hydraulics AG Frutigen, 3714 Frutigen, Switzerland

All rights reserved.
Data is provided for the purpose of product description only, and must not be construed as warranted characteristics in the legal sense. The information does not relieve users from the duty of conducting their own evaluations and tests. Because the products are subject to continual improvement, we reserve the right to amend the product specifications contained in this catalogue.

BUCHER hydraulics

WWW.SUMY.IR

Pressure valve
Reducing function

Q_{max} = 250 l/min, p_{max} = 350 bar
pilot operated, spool type, mechanically adjustable
Type series: DRPB-5-16-...

- Screw-in cartridge valve
- For cavity EB
- All external parts with zinc-nickel plating according to DIN EN ISO 19598
- Installation in threaded port body type GEBAA
- 2-way with external oil drain
- High flow rates
- Excellent stability over the whole pressure and flow range
- Sensitive adjustment
- Also available as stack valve
- Seated pilot stage

Description

The 2-way pressure-reducing valves, series DRP-5-..., are size 16, screw-in valves with a seated pilot stage and an M42×2 mounting thread. They are designed on the proven sliding-spool principle. When the pilot stage is active (pressure reduction function), pilot oil flows through an external oil drain port. In this condition, the secondary pressure in port 1 will be maintained at the set level, as long as the primary pressure in port 2 does not fall below that value. To obtain a reliable pressure setting over the entire pressure range, the overall pressure range is divided into different pressure stages. Each pressure range corresponds to a particular spring that allows a certain maximum operating pressure to be set. The pressure is set by means of an adjusting spindle. All external parts of the screw-in valves are zinc-nickel plated and are thus suitable for use in the harshest operating environments. These valves are mainly used in certain mobile and industrial applications to limit the system pressure. The oil drain takes place via external port. For self-assembly, please refer to the section related data sheets.

Symbol

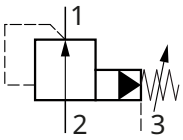

Technical data

General characteristics	Description, value, unit
Function group	Pressure valve
Function	Reducing function
Design	Screw-in cartridge valve
Controls	mechanically adjustable
Characteristic	pilot operated, spool type
Construction size	NG 16
Thread size	M42×2
Mounting attitude	unrestricted
Weight	0.95 kg
Cavity acc. ISO	fits into ISO 7789: 42-06-0-07
Cavity acc. factory standard	For cavity EB
Tightening torque steel	200 Nm
Tightening torque aluminium	200 Nm
Tightening torque tolerance	± 10 %
Minimum ambient temperature	- 30 °C
Maximum ambient temperature	+ 80 °C
Surface protection	All external parts with zinc-nickel plating according to DIN EN ISO 19598
Sealing material	see ordering code
Seal kit order number	NBR: DS-344-N / FKM: DS-344-V

Hydraulic characteristics	Description, value, unit
Maximum operating pressure	350 bar
Restriction of the operating pressure	port 3: max. 250 bar
Maximum flow rate	250 l/min
Flow direction	see symbol
Hydraulic fluid	HL and HLP mineral oil according to DIN 51 524; other fluids on request!
Minimum fluid temperature	- 30 °C
Maximum fluid temperature	+ 80 °C
Viscosity range	10 ... 650 mm^2/s (cSt)
Recommended viscosity range	15 ... 250 mm^2/s (cSt)
Minimum fluid cleanliness (cleanlineless class according to ISO 4406:1999)	class 20/18/15
Pilot-oil consumption	0.4...0.9 l/min
Minimum set pressure	10 bar
Maximum set pressure	350 bar
Pressure adjustment range	pressure range 04: 1 turn = ca. 8 bar pressure range 10: 1 turn = ca. 21 bar pressure range 16: 1 turn = ca. 32 bar pressure range 25: 1 turn = ca. 51 bar pressure range 35: 1 turn = ca. 70 bar

BUCHER
hydraulics
WWW.SUMY.IR

Performance graphs

measured with oil viscosity 33.0 mm²/s (cSt)

p = f (Q) Pressure-flow rate

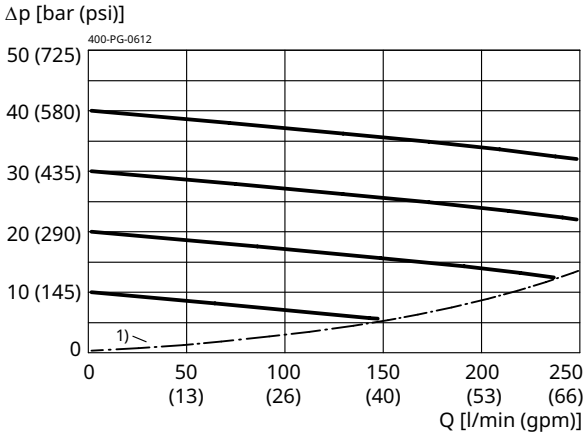

p_N = 40 bar (580 psi)
1) Einsatzgrenze / Application limit

p = f (Q) Pressure-flow rate

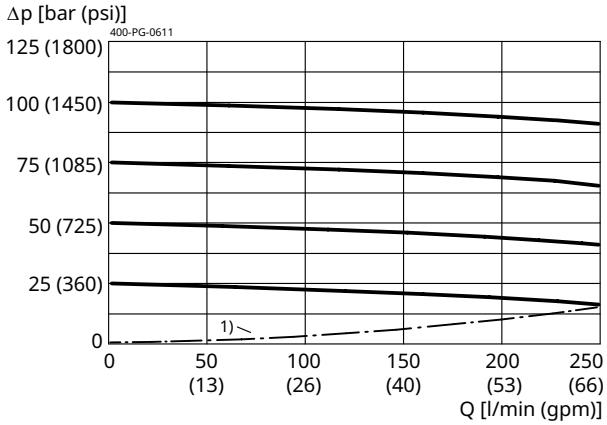

p_N = 100 bar (1450 psi)
1) Einsatzgrenze / Application limit

p = f (Q) Pressure-flow rate

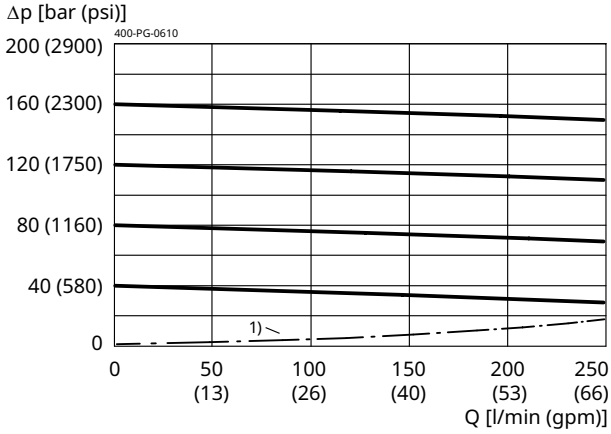

p_N = 160 bar (2300 psi)
1) Einsatzgrenze / Application limit

p = f (Q) Pressure-flow rate

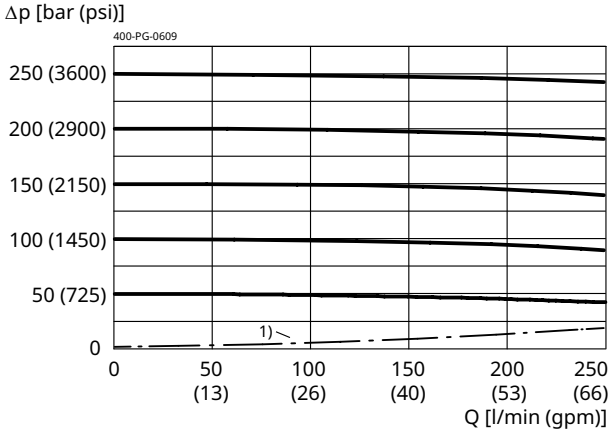

p_N = 250 bar (3600 psi)
1) Einsatzgrenze / Application limit

p = f (Q) Pressure-flow rate

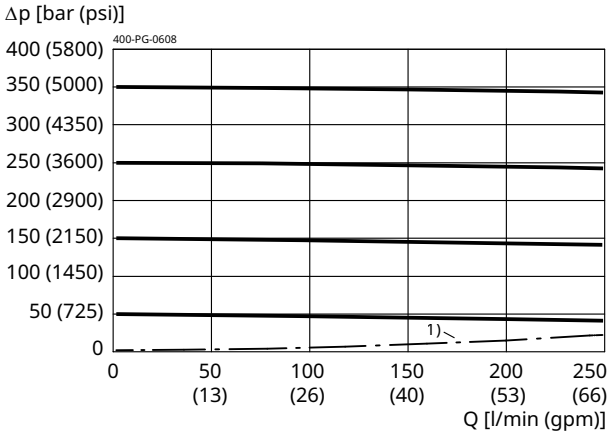

p_N = 350 bar (5000 psi)
1) Einsatzgrenze / Application limit

Dimensions and sectional view

Beispiel für die Masseinheit:
Example for the dimensional units:

0.79 = 0.79 mm millimeter
(.031) = 0.031" inch

Version "S": Einstellschraube *(Standard)*
Version "S": adjustment screw (standard)

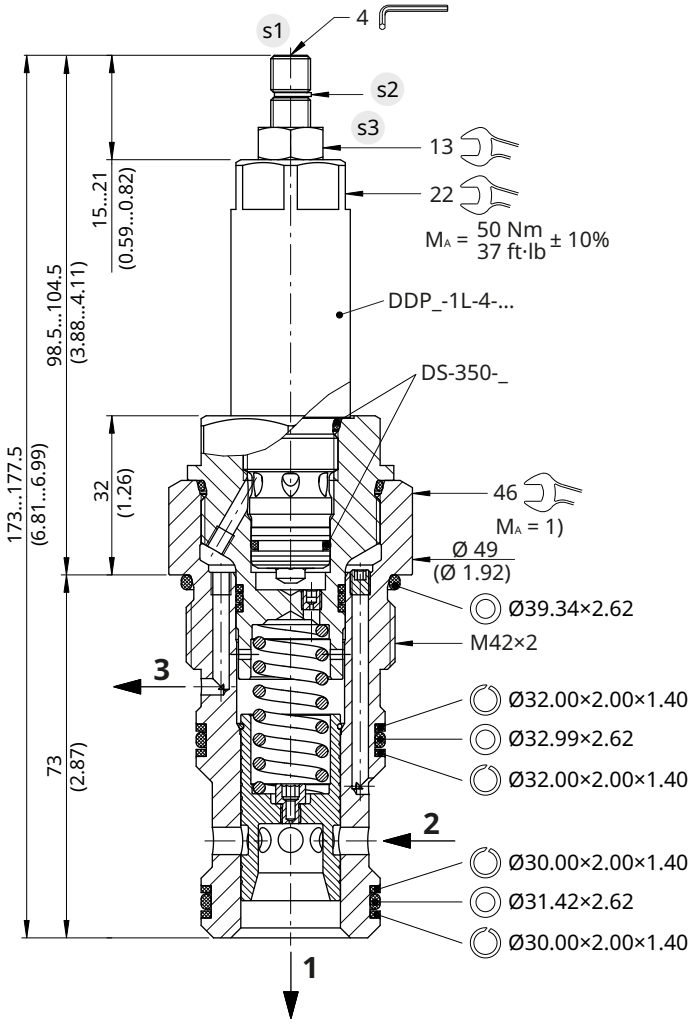

Version "H": Einstellschraube mit Handrad
Version "H": adjustment screw with handknob

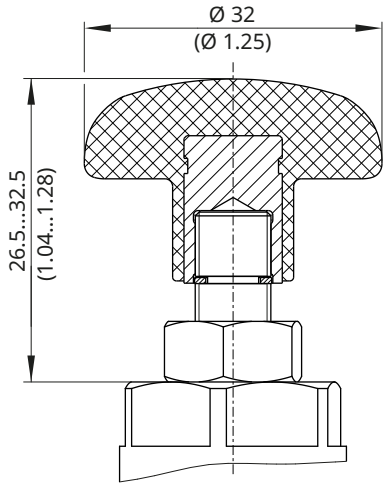

Einstellschraube mit Sicherungskappe
adjustment screw with tamper-proof cap

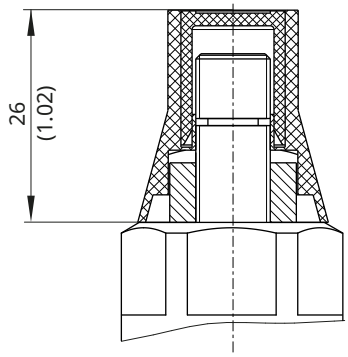

Installation information

ATTENTION!
Only qualified personnel with mechanical skills may carry out any maintenance work. Generally, the only work that should ever be undertaken is to check, and possibly replace, the seals. When changing seals, oil or grease the new seals thoroughly before fitting them.

NOTE!
Set the required pressure with the adjusting screw s1 . After you have set the valve, lock the adjusting screw s1 with the lock nut.

NOTE!
1) When fitting the screw-in cartridge valve, use the specified tightening torque. The value can be found in the chapter "Technical data".

NOTE!
Valve settings can be sealed by fitting the tamper-proof cap. To fit the cap, the snap ring s2 has to be removed. Subsequent adjustment is only possible by destroying the tamper-proof cap.

NOTE!
The seals are not available individually. The seal kit order number can be found in the chapter "Technical data".

Ordering code

Ex. D R P B - 5 - 16 - 04 - S _ - 1

D	=	pressure valve
R	=	reducing-function
P	=	cartridge design
A ... Q	=	standard model according to valid data sheet
Z ... R	=	special model (on request)
5	=	pressure-reducing with external spring space relief
16	=	nominal size 16
04	=	pressure range 10 ... 40 bar / 145...580 psi
10	=	pressure range 25...100 bar / 360...1450 psi
16	=	pressure range 40...160 bar / 580...2300 psi
25	=	pressure range 50...250 bar / 725...3600 psi
35	=	pressure range 50...350 bar / 725...5000 psi
S	=	adjustment screw with internal hexagon **(standard)**
H	=	adjustment screw with hand knob
(blank)	=	NBR (nitril-butadien-rubber / BUNA) seals **(standard)**
V	=	FKM (fluorocarbon rubber / VITON) seals (special seals on request)
1...9	=	technical design no. (omit by ordering)

NOTE!
When required the tamper-proof cap (seal) for the adjustment screw must be ordered separately in plain language.

Related data sheets

Reference	Description
400-P-040011	Form tools
400-P-080111	Cavity EB
400-P-750115	Threaded port body GEBAA

info.ch@bucherhydraulics.com **www.bucherhydraulics.com**

© 2026 by Bucher Hydraulics AG Frutigen, 3714 Frutigen, Switzerland

All rights reserved.
Data is provided for the purpose of product description only, and must not be construed as warranted characteristics in the legal sense. The information does not relieve users from the duty of conducting their own evaluations and tests. Because the products are subject to continual improvement, we reserve the right to amend the product specifications contained in this catalogue.

BUCHER hydraulics

PRESSURE REDUCING VALVE
PILOT OPERATED, SLIDING SPOOL

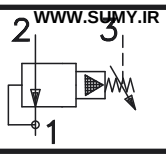

WWW.SUMY.IR

Pat.#5,546,980

TORQUE:
Steel = 55/60 Ft–Lb. [74/81 Nm]
Aluminum = 35/40 Ft–Lb. [47/54 Nm]

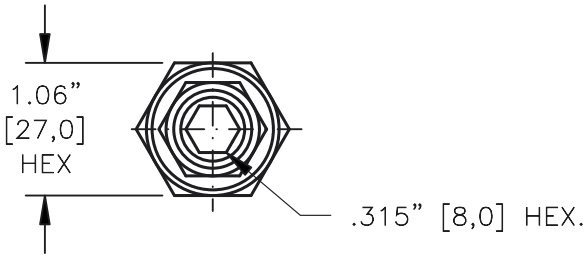

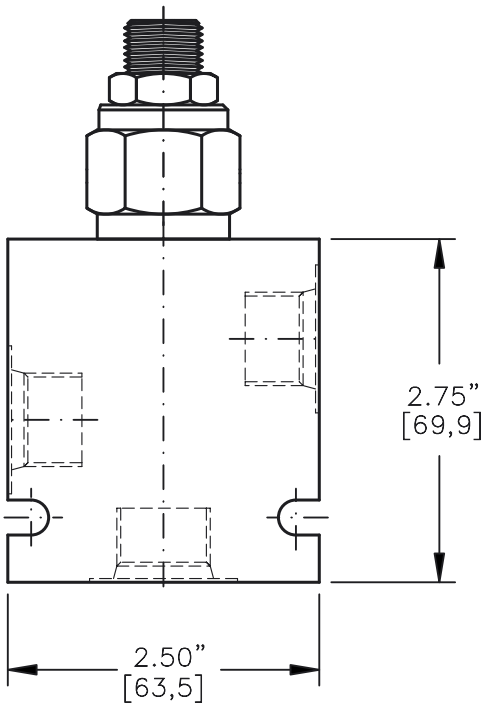

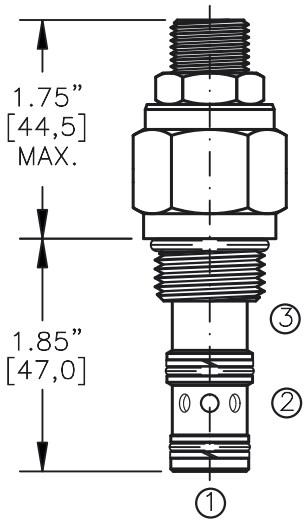

FOR ALUMINUM OR STEEL VALVE HOUSING CONFIGURATIONS SEE PAGE 0–032.1

PRPS–10–X–X–X–XX

BASIC

SIZE
10 = 7/8"–14 UNF

SEALS
N = BUNA "N"
V = VITON

ADJUSTMENT
S = ADJUSTING SCREW
C = CAPPED
T = TAMPERPROOF
K = HANDKNOB
M = METAL HANDKNOB

PRESSURE RANGE
15 = 50 TO 1500 PSI
30 = 50 TO 3000 PSI
50 = 50 TO 5000 PSI

PORTS
0 = CARTRIDGE ONLY
02BX = G 1/4" BSPP
03BX = G 3/8" BSPP
06TX = SAE – #6
08TX = SAE – #8

"A" – ALUM. HOUSING
"S" – STEEL HOUSING

FOR ADJUSTMENT CONTROL OPTIONS SEE PAGE 0–050.0

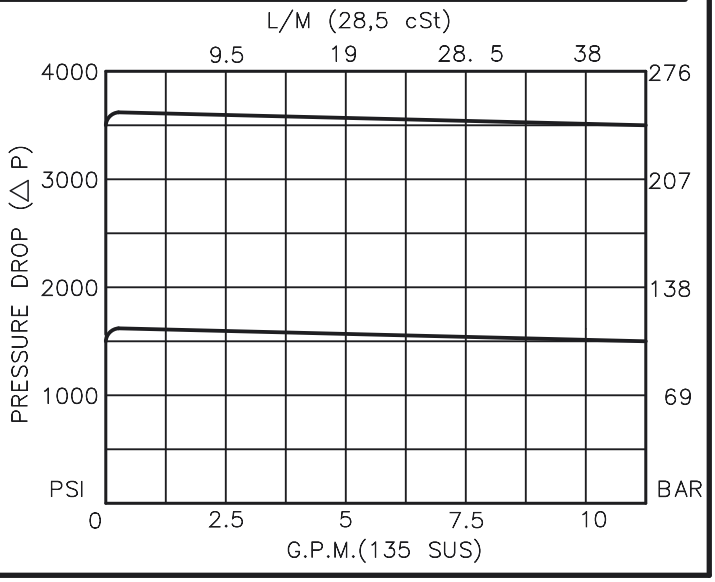

BUCHER hydraulics

WWW.SUMY.IR

PRESSURE REDUCING VALVE
PILOT OPERATED, SLIDING SPOOL

DESCRIPTION

This unit is a PILOT OPERATED, SLIDING SPOOL, SCREW IN CARTRIDGE STYLE, HYDRAULIC PRESSURE REDUCING VALVE, designated to act as a pressure-regulating device for secondary circuit.

OPERATIONS

This valve will allow flow from port 2 to port 1 until pressure in port 1 exceeds the force of the spring bias then the spool will shift and block flow from port 2 to port 1 and maintain the same pressure as the force of the spring setting regardless of the pressure at port 2.

FEATURES AND BENEFITS

Leakproof screw adjustment.
Pressure in tank port (3) will add to the bias spring setting, and is limited to 2000 PSI.
Adjusting screw can not be backed out of the valve.
Overset protection-pilot spring can not go solid.
Hardened precision fitted spool & cage provides reliable, long life.
A unique self aligning (floating) cage provides very low hysteresis and reliable operation.
All external carbon steel parts are plated for longer life against the elements.
Valve is available with screw, tamperproof, capped and handknob adjustments.
All cartridge valves are 100% functionally tested.
Industry common cavity.

SPECIFICATIONS

OPERATING PRESSURE: 5,000 PSI [350 Bar]
PROOF PRESSURE: 10,000 PSI [700 Bar]
FLOW: 12.0 GPM [46 L/M] nominal. See performance chart.
INTERNAL LEAKAGE: 5 cu.in./min [.82 cc/m] @ 85% of crack pressure.
DEFINITION OF CRACK: evident at 0.06 GPM [0.25 LPM]
VALVE HOUSINGS: 2500 PSI [175 Bar] = Aluminum - Anodized.
5000 PSI [350 Bar] = Steel - Unplated.
OPERATING TEMPERATURE: -40° to +250° F. [-40° to +120° C.]
OPERATING MEDIA: All general purpose hydraulic fluids such as MIL-H-5606, SAE-#10, SAE-#20, etc.
INSTALLATION: No restriction.
FILTRATION: 25 microns or better.
SEAL KIT NUMBER: SKN-1031 for buna "N".
SKV-1031 for viton.
WEIGHT: 0.42 lb [.19 kg] cartridge only.
VALVE CAVITY: #C1030, See Page 0-032.0.

info.el@bucherhydraulics.com www.bucherhydraulics.com/commoncavity

© 2015 by Bucher Hydraulics, Inc., 2545 Northwest Parkway, Elgin, Illinois 60124, USA
All rights reserved.
Data is provided for the purpose of product description only, and must not be construed as warranted characteristics in the legal sense. The information does not relieve users from the duty of conducting their own evaluations and tests. Because the products are subject to continual improvement, we reserve the right to amend the product specifications contained in this catalogue.

BUCHER hydraulics

PRESSURE REDUCING/RELIEVING VALVE
PILOT OPERATED, SLIDING SPOOL

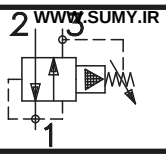

WWW.SUMY.IR

TORQUE:
Steel = 35/40 Ft–Lb. [47/54 Nm]
Aluminum = 25/30 Ft–Lb. [34/41 Nm]

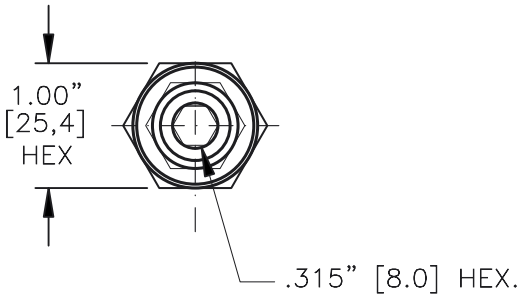

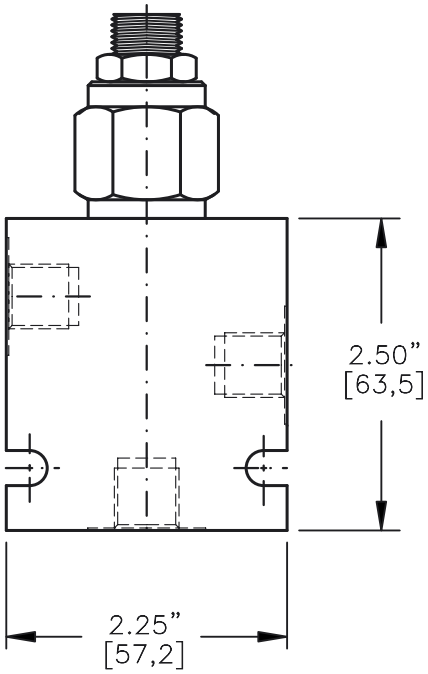

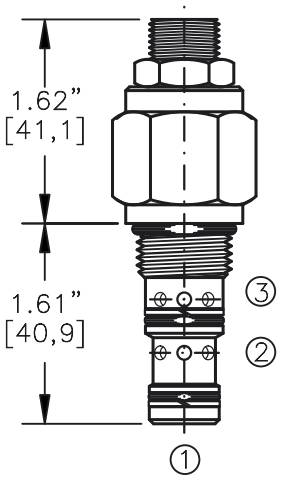

FOR ALUMINUM OR STEEL VALVE HOUSING CONFIGURATIONS SEE PAGE 0–031.1

PRRS–08–X–X–X–XX

BASIC

SIZE
08 = 3/4"–16 UNF

SEALS
N = BUNA "N"
V = VITON

ADJUSTMENT
S = ADJUSTING SCREW
C = CAPPED
T = TAMPERPROOF
K = HANDKNOB
M = METAL HANDKNOB

PRESSURE RANGE
15 = 50 TO 1500 PSI
30 = 50 TO 3000 PSI
50 = 50 TO 5000 PSI

PORTS
0 = CARTRIDGE ONLY
02BX = G 1/4" BSPP
06TX = SAE – #6
"A" – ALUM. HOUSING
"S" – STEEL HOUSING

FOR ADJUSTMENT CONTROL OPTIONS SEE PAGE 0–050.0

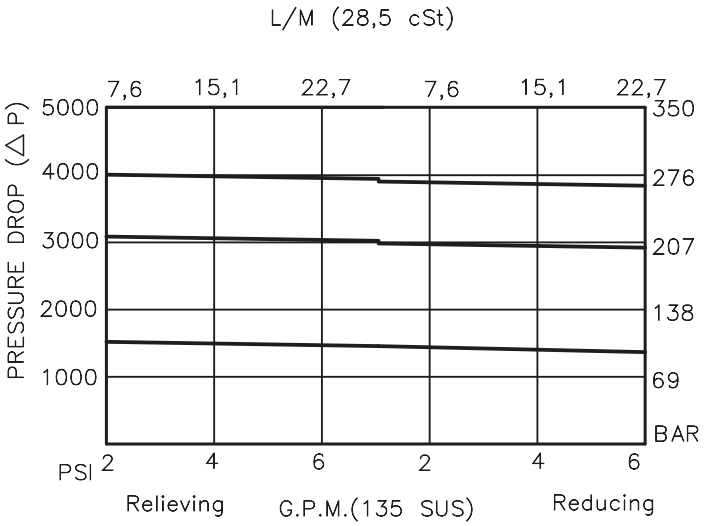

BUCHER hydraulics

WWW.SUMY.IR

PRESSURE REDUCING/RELIEVING VALVE
PILOT OPERATED, SLIDING SPOOL

DESCRIPTION

This unit is a PILOT OPERATED, SLIDING SPOOL, SCREW IN CARTRIDGE STYLE, HYDRAULIC PRESSURE REDUCING/RELIEVING VALVE, designated to act as a pressure-regulating device for secondary circuit.

OPERATIONS

This valve will allow flow from port 2 to port 1 until pressure in port 1 exceeds the force of the spring bias then the spool will shift and block flow from port 2 to port 1 and maintain the same pressure as the force of the spring setting regardless of the pressure at port 2. In this mode, the valve will also relieve from port 1 to port 3, regulating pressure at port 1.

FEATURES AND BENEFITS

Leakproof screw adjustment.
Pressure in tank port (3) will add to the bias spring setting, and is limited to 2000 PSI.
Adjusting screw can not be backed out of the valve.
Overset protection-pilot spring can not go solid.
Hardened precision fitted spool & cage provides reliable, long life.
A unique self aligning (floating) cage provides very low hysteresis and reliable operation.
All external carbon steel parts are plated for longer life against the elements.
Valve is available with screw, tamperproof, capped and handknob adjustments.
All cartridge valves are 100% functionally tested.
Industry common cavity.

SPECIFICATIONS

OPERATING PRESSURE: 5,000 PSI [350 Bar]
PROOF PRESSURE: 10,000 PSI [700 Bar]
FLOW: 6.0 GPM [23 L/M] nominal. See performance chart.
INTERNAL LEAKAGE: 5 cu.in./min [.82 cc/m] @ 85% of crack pressure.
DEFINITION OF CRACK: evident at 0.06 GPM [0.25 LPM]
VALVE HOUSINGS: 2500 PSI [175 Bar] = Aluminum - Anodized.
5000 PSI [350 Bar] = Steel - Unplated.
OPERATING TEMPERATURE: -40° to +250° F. [-40° to +120° C.]
OPERATING MEDIA: All general purpose hydraulic fluids such as MIL-H-5606, SAE-#10, SAE-#20, etc.
INSTALLATION: No restriction.
FILTRATION: 25 microns or better.
SEAL KIT NUMBER: SKN-0831 for buna "N".
SKV-0831 for viton.
WEIGHT: 0.30 lb [.14 kg] cartridge only.
VALVE CAVITY: #C0830, See Page 0-031.0.

info.el@bucherhydraulics.com www.bucherhydraulics.com/commoncavity

© 2015 by Bucher Hydraulics, Inc., 2545 Northwest Parkway, Elgin, Illinois 60124, USA
All rights reserved.
Data is provided for the purpose of product description only, and must not be construed as warranted characteristics in the legal sense. The information does not relieve users from the duty of conducting their own evaluations and tests. Because the products are subject to continual improvement, we reserve the right to amend the product specifications contained in this catalogue.

BUCHER hydraulics

PRESSURE REDUCING/RELIEVING VALVE
PILOT OPERATED, SLIDING SPOOL

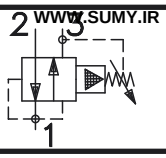

WWW.SUMY.IR

Pat.#5,546,980

TORQUE:
Steel = 55/60 Ft–Lb. [74/81 Nm]
Aluminum = 35/40 Ft–Lb. [47/54 Nm]

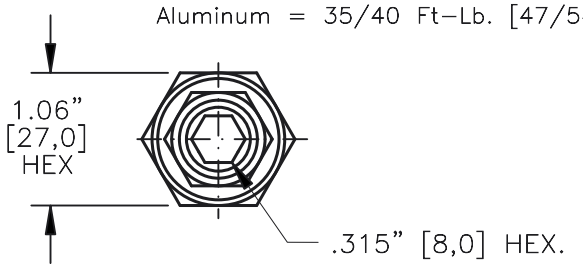

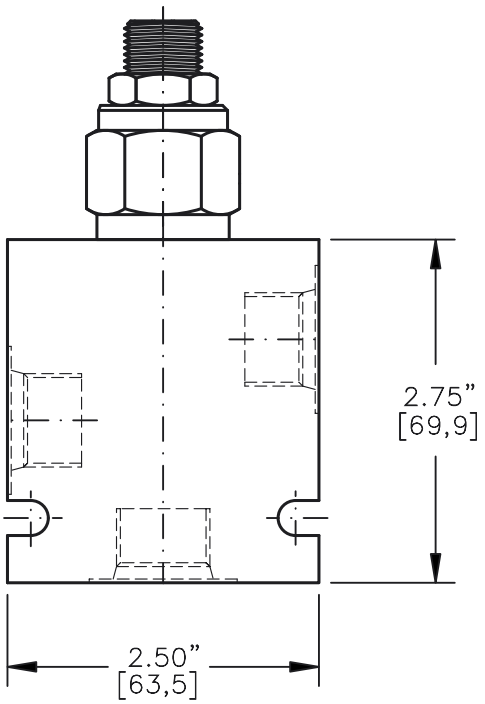

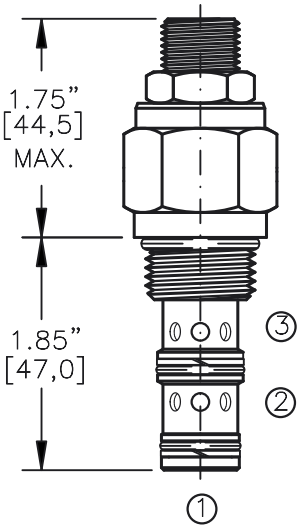

FOR ALUMINUM OR STEEL VALVE HOUSING CONFIGURATIONS SEE PAGE 0–032.1

PRRS–10–X–X–X–XX

BASIC

SIZE
10 = 7/8"–14 UNF

SEALS
N = BUNA "N"
V = VITON

ADJUSTMENT
S = ADJUSTING SCREW
C = CAPPED
T = TAMPERPROOF
K = HANDKNOB
M = METAL HANDKNOB

PRESSURE RANGE
06 = 50 TO 600 PSI
15 = 50 TO 1500 PSI
30 = 50 TO 3000 PSI
50 = 50 TO 5000 PSI

PORTS
0 = CARTRIDGE ONLY
02BX = G 1/4" BSPP
03BX = G 3/8" BSPP
06TX = SAE – #6
08TX = SAE – #8

"A" – ALUM. HOUSING
"S" – STEEL HOUSING

FOR ADJUSTMENT CONTROL OPTIONS SEE PAGE 0–050.0

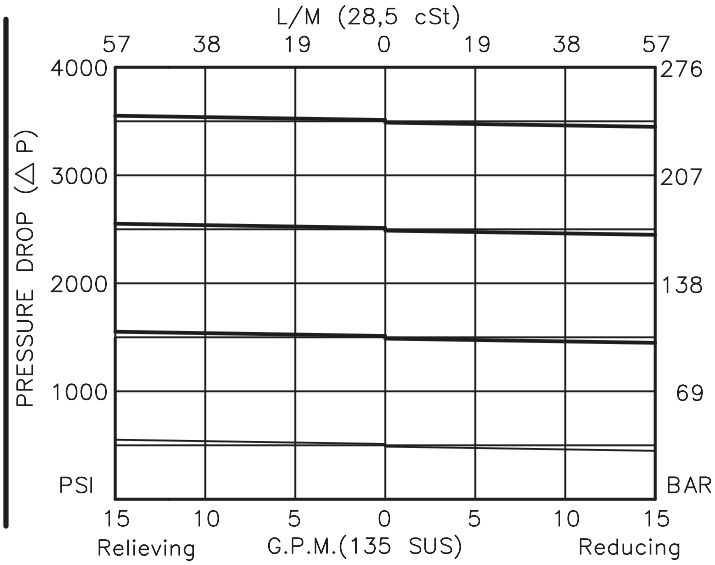

BUCHER hydraulics

WWW.SUMY.IR

PRESSURE REDUCING/RELIEVING VALVE
PILOT OPERATED, SLIDING SPOOL

DESCRIPTION

This unit is a PILOT OPERATED, SLIDING SPOOL, SCREW IN CARTRIDGE STYLE, HYDRAULIC PRESSURE REDUCING/RELIEVING VALVE, designated to act as a pressure-regulating device for secondary circuit.

OPERATIONS

This valve will allow flow from port 2 to port 1 until pressure in port 1 exceeds the force of the spring bias then the spool will shift and block flow from port 2 to port 1 and maintain the same pressure as the force of the spring setting regardless of the pressure at port 2. In this mode, the valve will also relieve from port 1 to port 3, regulating pressure at port 1.

FEATURES AND BENEFITS

Leakproof screw adjustment.
Pressure in tank port (3) will add to the bias spring setting, and is limited to 2000 PSI.
Adjusting screw can not be backed out of the valve.
Overset protection-pilot spring can not go solid.
Hardened precision fitted spool & cage provides reliable, long life.
A unique self aligning (floating) cage provides very low hysteresis and reliable operation.
All external carbon steel parts are plated for longer life against the elements.
Valve is available with screw, tamperproof, capped and handknob adjustments.
All cartridge valves are 100% functionally tested.
Industry common cavity.

SPECIFICATIONS

OPERATING PRESSURE: 5,000 PSI [350 Bar]
PROOF PRESSURE: 10,000 PSI [700 Bar]
FLOW: 12.0 GPM [46 L/M] nominal. See performance chart.
INTERNAL LEAKAGE: 5 cu.in./min [.82 cc/m] @ 85% of crack pressure.
DEFINITION OF CRACK: evident at 0.06 GPM [0.25 LPM]
VALVE HOUSINGS: 2500 PSI [175 Bar] = Aluminum - Anodized.
5000 PSI [350 Bar] = Steel - Unplated.
OPERATING TEMPERATURE: -40° to +250° F. [-40° to +120° C.]
OPERATING MEDIA: All general purpose hydraulic fluids such as MIL-H-5606, SAE-#10, SAE-#20, etc.
INSTALLATION: No restriction.
FILTRATION: 25 microns or better.
SEAL KIT NUMBER: SKN-1031 for buna "N".
SKV-1031 for viton.
WEIGHT: 0.42 lb [.19 kg] cartridge only.
VALVE CAVITY: #C1030, See Page 0-032.0.

info.el@bucherhydraulics.com

www.bucherhydraulics.com/commoncavity

© 2015 by Bucher Hydraulics, Inc., 2545 Northwest Parkway, Elgin, Illinois 60124, USA
All rights reserved.
Data is provided for the purpose of product description only, and must not be construed as warranted characteristics in the legal sense. The information does not relieve users from the duty of conducting their own evaluations and tests. Because the products are subject to continual improvement, we reserve the right to amend the product specifications contained in this catalogue.

BUCHER hydraulics

PRESSURE REDUCING/RELIEVING VALVE PILOT OPERATED, SLIDING SPOOL

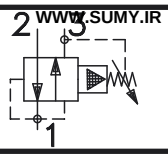

WWW.SUMY.IR

Pat. # 5,546,980

TORQUE:
Steel = 70/75 Ft–Lb. [95/102 Nm]
Aluminum = 55/60 Ft–Lb. [74/81 Nm]

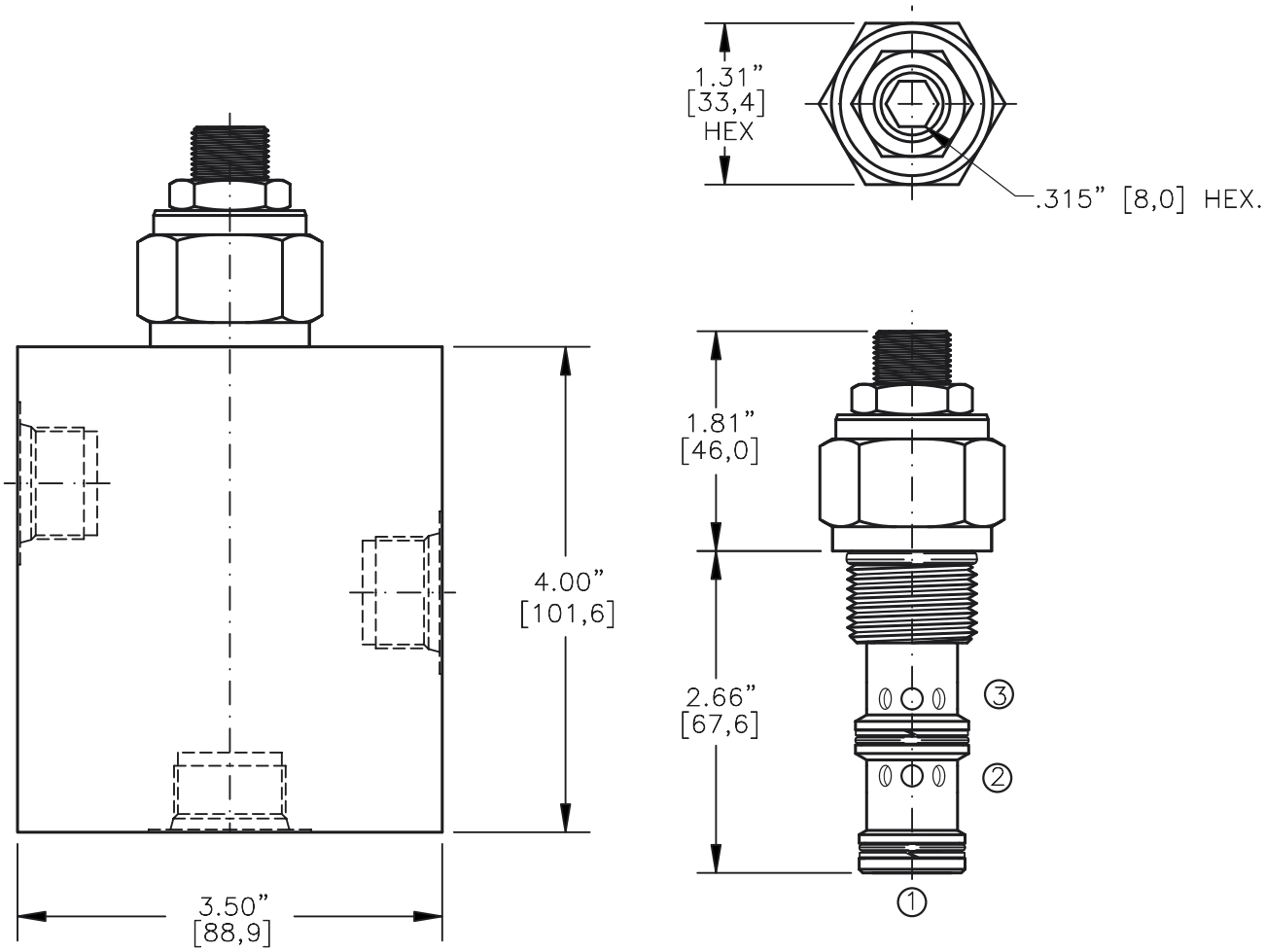

FOR ALUMINUM OR STEEL VALVE HOUSING CONFIGURATIONS SEE PAGE 0–033.1

PRRS–12–X–X–0–XX

BASIC

SIZE
12 = 1.062"–12 UNF

SEALS
N = BUNA "N"
V = VITON

ADJUSTMENT
S = ADJUSTING SCREW
C = CAPPED
T = TAMPERPROOF
K = HANDKNOB
M = METAL HANDKNOB

FOR ADJUSTMENT CONTROL OPTIONS SEE PAGE 0–050.0

PRESSURE RANGE
15 = 50 TO 1500 PSI
30 = 50 TO 3000 PSI
50 = 50 TO 5000 PSI

PORTS
0 = CARTRIDGE ONLY
04BX = G 1/2" BSPP
06BX = G 3/4" BSPP
10TX = SAE – #10
12TX = SAE – #12

"A" – ALUM. HOUSING
"S" – STEEL HOUSING

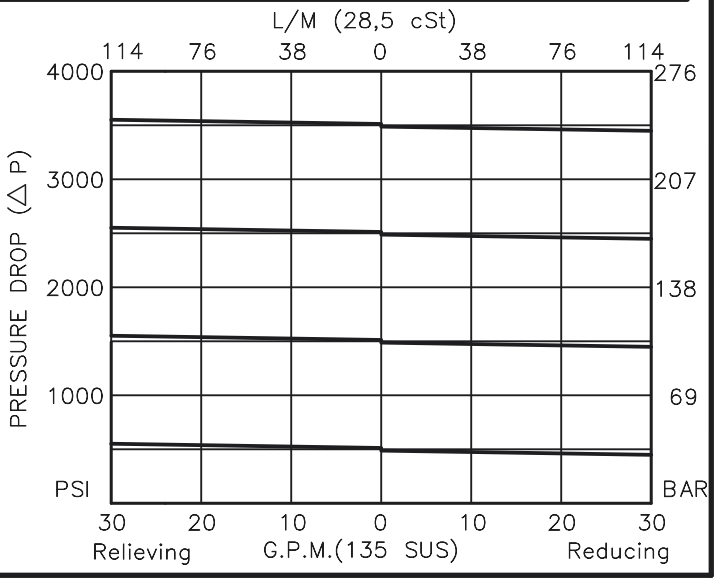

BUCHER hydraulics

WWW.SUMY.IR

PRESSURE REDUCING/RELIEVING VALVE
PILOT OPERATED, SLIDING SPOOL

DESCRIPTION

This unit is a PILOT OPERATED, SLIDING SPOOL, SCREW IN CARTRIDGE STYLE, HYDRAULIC PRESSURE REDUCING/RELIEVING VALVE, designated to act as a pressure-regulating device for secondary circuit.

OPERATIONS

This valve will allow flow from port 2 to port 1 until pressure in port 1 exceeds the force of the spring bias then the spool will shift and block flow from port 2 to port 1 and maintain the same pressure as the force of the spring setting regardless of the pressure at port 2. In this mode, the valve will also relieve from port 1 to port 3, regulating pressure at port 1.

FEATURES AND BENEFITS

Leakproof screw adjustment.
Pressure in tank port (3) will add to the bias spring setting, and is limited to 2000 PSI.
Adjusting screw can not be backed out of the valve.
Overset protection-pilot spring can not go solid.
Hardened precision fitted spool & cage provides reliable, long life.
A unique self aligning (floating) cage provides very low hysteresis and reliable operation.
All external carbon steel parts are plated for longer life against the elements.
Valve is available with screw, tamperproof, capped and handknob adjustments.
All cartridge valves are 100% functionally tested.

SPECIFICATIONS

OPERATING PRESSURE: 5,000 PSI [350 Bar]
PROOF PRESSURE: 10,000 PSI [700 Bar]
FLOW: 24.0 GPM [91 L/M] nominal. See performance chart.
INTERNAL LEAKAGE: 5 cu.in./min [.82 cc/m] @ 85% of crack pressure.
DEFINITION OF CRACK: evident at 0.06 GPM [0.25 LPM]
VALVE HOUSINGS: 2500 PSI [175 Bar] = Aluminum - Anodized.
5000 PSI [350 Bar] = Steel - Unplated.
OPERATING TEMPERATURE: -40° to +250° F. [-40° to +120° C.]
OPERATING MEDIA: All general purpose hydraulic fluids such as MIL-H-5606, SAE-#10, SAE-#20, etc.
INSTALLATION: No restriction.
FILTRATION: 25 microns or better.
SEAL KIT NUMBER: SKN-1231 for Buna "N".
SKV-1231 for Viton.
WEIGHT: 0.56 lb [0,26 kg] cartridge only.
VALVE CAVITY: #C1230, See Page 0-033.0.

info.el@bucherhydraulics.com www.bucherhydraulics.com/commoncavity

© 2015 by Bucher Hydraulics, Inc., 2545 Northwest Parkway, Elgin, Illinois 60124, USA
All rights reserved.
Data is provided for the purpose of product description only, and must not be construed as warranted characteristics in the legal sense. The information does not relieve users from the duty of conducting their own evaluations and tests. Because the products are subject to continual improvement, we reserve the right to amend the product specifications contained in this catalogue.

BUCHER hydraulics

PROPORTIONAL PRESSURE REDUCING/ RELIEVING. DIRECT ACTING, SPOOL TYPE.

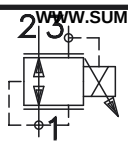

WWW.SUMY.IR

TORQUE:
Steel = 55/60 Ft–Lb. [74/81 Nm]
Aluminum = 35/40 Ft–Lb. [47/54 Nm]

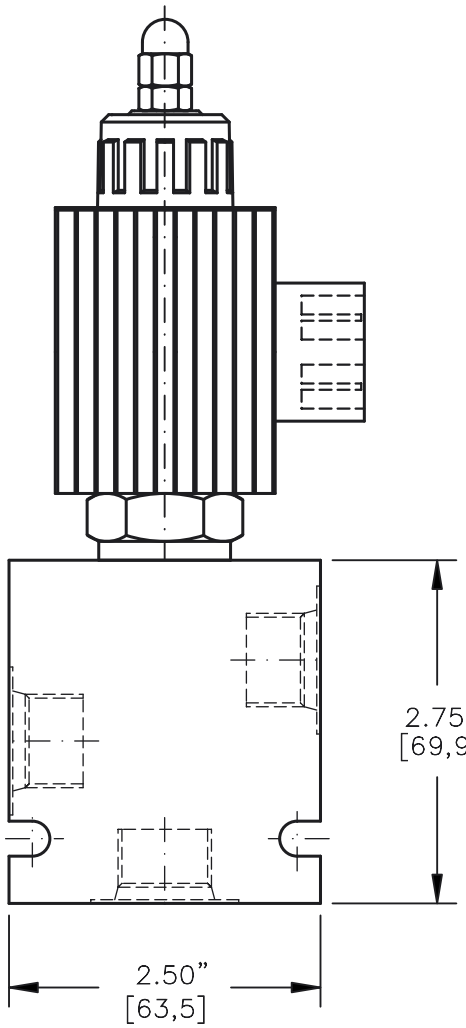

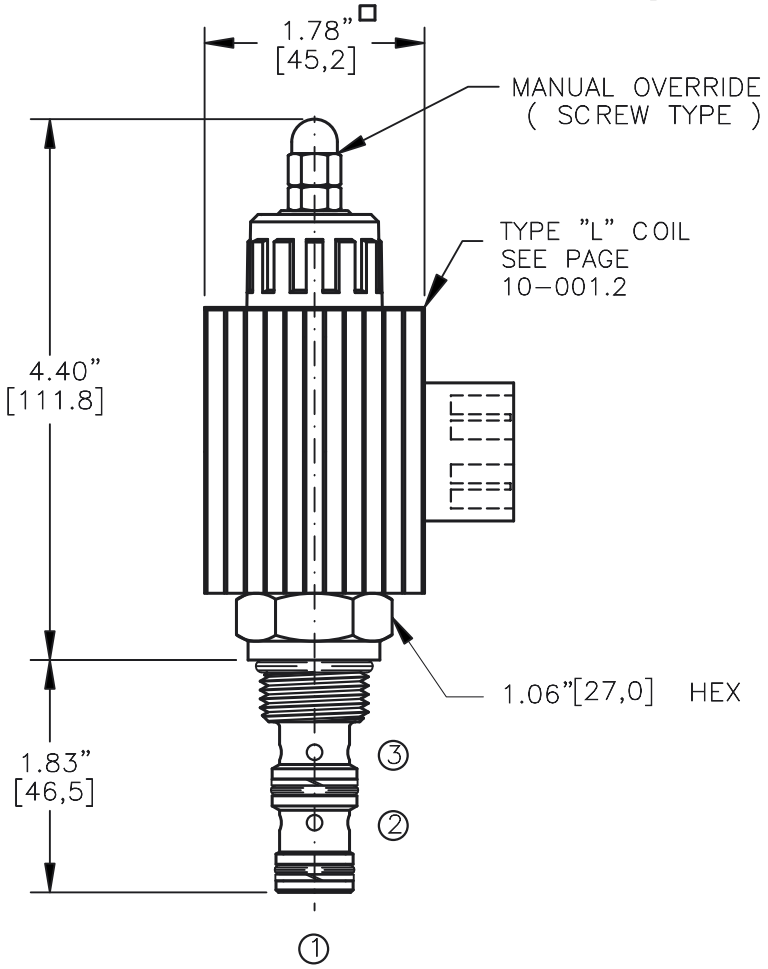

NOTES:
1. FOR ALUMINUM OR STEEL VALVE HOUSING CONFIGURATIONS SEE PAGE 0–032.1
2. SOLENOIDS AVAILABLE WITH DIODES – CONSULT FACTORY.

EPRR–10–X–XX–X–X–XXX X

BASIC

SIZE
10 = 7/8"–14UNF

SEALS
N = BUNA "N"
V = VITON

REGULATED PRESSURE
02 = 0 TO 200 PSI
03 = 0 TO 300 PSI
04 = 0 TO 400 PSI
05 = 0 TO 500 PSI
06 = 0 TO 600 PSI
07 = 0 TO 700 PSI
08 = 0 TO 800 PSI
10 = 0 TO 1000 PSI

PORTS = CARTRIDGE ONLY
0 = G 1/4" BSPP
02BX = G 3/8" BSPP
03BX = SAE – #6
06TX = SAE – #8
08TX "A" = ALUM. HOUSING
"S" = STEEL HOUSING

ADJUSTMENT OPTIONS
M = MANUAL OVERRIDE

VOLTAGE AMPS
12D = 12 VDC 3.00
24D = 24 VDC 1.50

TERMINALS
L =18GA. 24" LEADS
T =SPADE TERM.
B =BOLT TERM.
G =DIN43650
W =WEATHER–PACK
D =DEUTSCH–DT04–2P
M =METRI–PACK CONN.

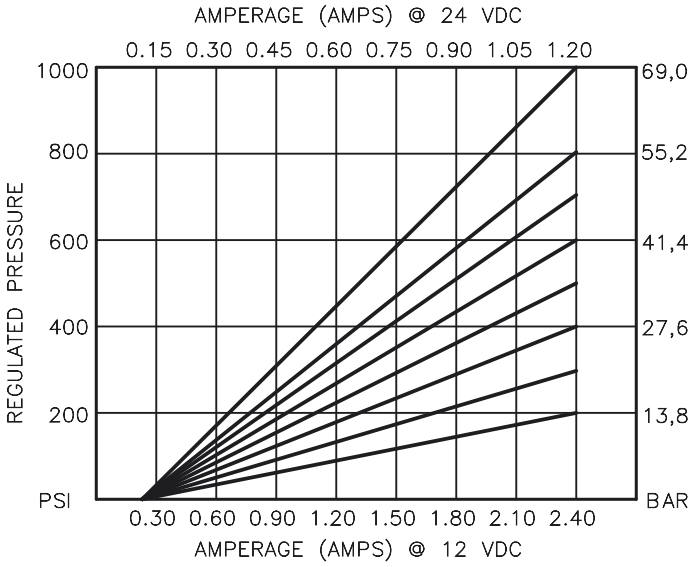

BUCHER hydraulics

WWW.SUMY.IR

ELECTRO–HYDRAULIC, PROPORTIONAL, PRESSURE REDUCING/RELIEVING VALVE.

DESCRIPTION

This unit is a electro–hydraulic, proportional, screw in cartridge style, direct acting, spool type, pressure reducing/relieving flow pressure control valve.

OPERATIONS

When the coil is de–energized, this valve allows no flow or pressure from port 2 to 1 and port 1 is open to (tank) port 3.
When the coil is energized, the spool in this valve shifts and allows flow and pressure between ports 2 and 1 and blocks port 3 (tank).
When the coil is energized the armature moves a precision bias spring against the metering spool thus varying the pressure at port 1 (Reg.) proportional to the curent input. When the current is increased to the coil the pressure will increase and when decreased it will decrease.

IN THE EVENT OF POWER FAILURE THE VALVE WILL REDUCE REGULATED PRESSURE AT PORT 1 TO ZERO.

FEATURES AND BENEFITS

Continuous–duty, very low heat rise & waterproof solenoid coil.
Interchangeable solenoid coils & terminations options available.
Hardened precision fitted spool & sleeve provides reliable, long life.
Very efficient wet – armature solenoid core tube construction.
All external carbon steel parts are plated for longer life against the elements.
All cartridge valves are 100% functionally tested.
Industry common cavity.

BUCHER hydraulics

WWW.SUMY.IR

ELECTRO–HYDRAULIC, PROPORTIONAL, PRESSURE REDUCING/RELIEVING VALVE.

SPECIFICATIONS

OPERATING PRESSURE: 5,000 PSI [350 Bar]
PROOF PRESSURE: 10,000 PSI [700 Bar]
REGULATED PRESSURE: 0 to 1,000 PSI [0 to 69,0 Bar] See performance chart
FLOW: 1.0 GPM (3.8 l/m) nominal
INTERNAL LEAKAGE: 10 cu.in/min [164 cc/m] @ 5,000 PSI [350 Bar]
VALVE HOUSINGS: 2500 PSI [175 Bar] = Aluminum – Anodized.
5000 PSI [350 Bar] = Steel – Unplated.
OPERATING TEMPERATURE: –40° to +250° F. [–40° to +120° C.]
OPERATING MEDIA: All general purpose hydraulic fluids such as MIL–H–5606, SAE–#10, SAE–#20, etc.
RESPONSE: The most efficient method to control this valve is with current control and a 50 Hz dither.
POWER REQUIREMENTS: 12 VDC, Operating current 0.2 to 2.4 AMPS.
24 VDC, Operating current 0.1 to 1.2 AMPS.
SEAL KIT: SKN–1031 Buna "N"
SKV–1031 Viton
INSTALLATION: No restrictions.
WEIGHT: 1.95 lb [.88 kg] cartridge with coil only.
VALVE CAVITY: #C1030, See Page 0–032.0.

info.el@bucherhydraulics.com

www.bucherhydraulics.com/commoncavity

© 2015 by Bucher Hydraulics, Inc., 2545 Northwest Parkway, Elgin, Illinois 60124, USA
All rights reserved.
The technical information in this catalog, may contain calculated figures (for reference only) and not actual performance data for this product. Data is provided for the purpose of product description only, and must not be construed as warranted characteristics in the legal sense. The information does not relieve users from the duty of conducting their own evaluations and tests. Because the products are subject to continual improvement, we reserve the right to amend the product specifications contained in this catalogue.

BUCHER hydraulics

PROPORTIONAL PRESSURE REDUCING/ RELIEVING. PILOT OPERATED, SLIDING SPOOL

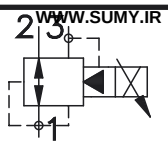

WWW.SUMY.IR

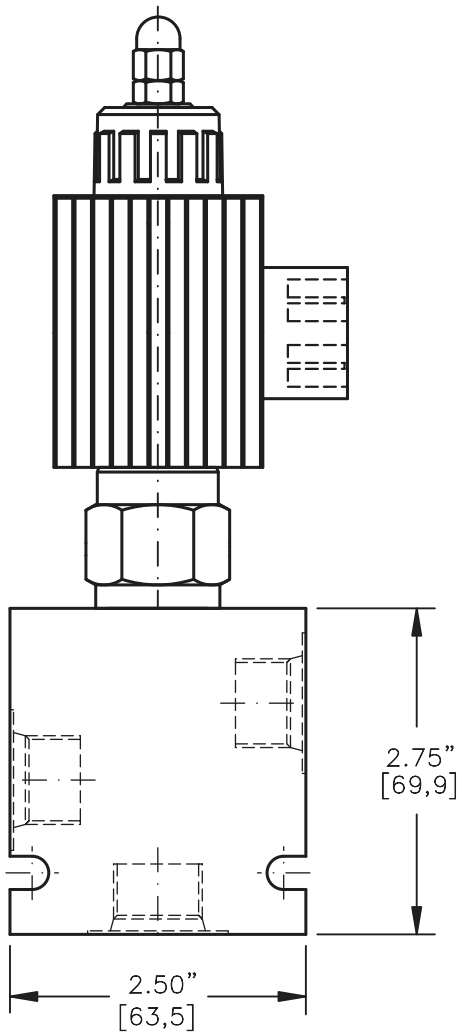

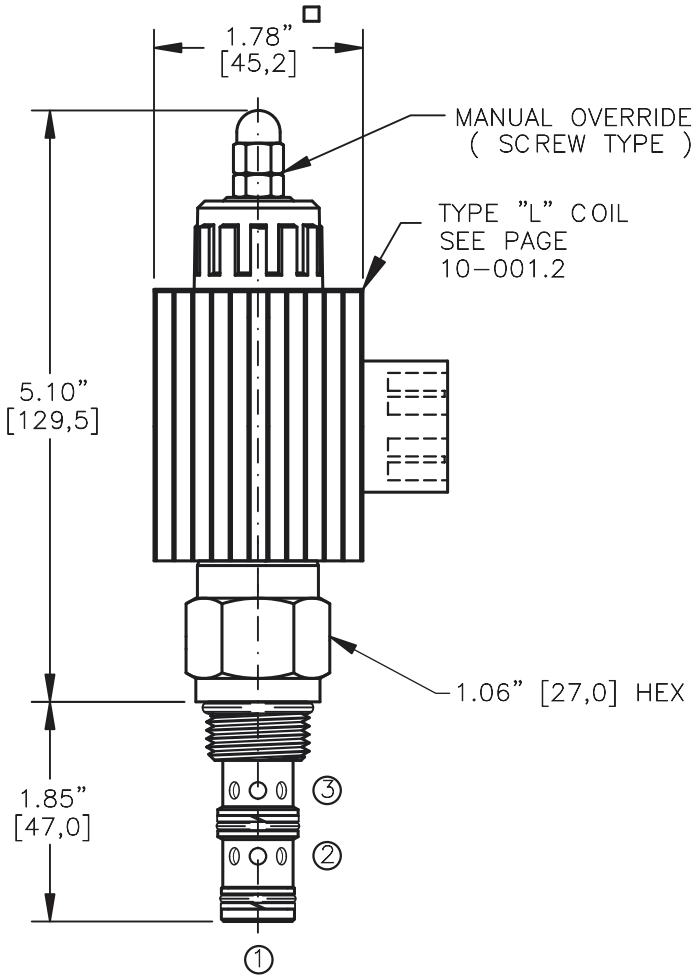

TORQUE:

Steel = 55/60 Ft-Lb. [74/81 Nm]
Aluminum = 35/40 Ft-Lb. [47/54 Nm]

EPRS-10-X-XX-X-X-XXX X

BASIC

SIZE
10 = 7/8"-14UNF

SEALS
N = BUNA "N"
V = VITON

REGULATED PRESSURE
15 = 50 TO 1500 PSI
30 = 50 TO 3000 PSI
50 = 50 TO 5000 PSI

PORTS = CARTRIDGE ONLY
0 = G 1/4" BSPP
02BX = G 3/8" BSPP
06BX = SAE - #6
06TX = SAE - #8
08TX "A" = ALUM. HOUSING
"S" = STEEL HOUSING

ADJUSTMENT OPTIONS
M = MANUAL OVERRIDE

VOLTAGE AMPS
12D = 12 VDC 3.00
24D = 24 VDC 1.50

TERMINALS
L = 18GA. 24" LEADS
T = SPADE TERM.
B = BOLT TERM.
G = DIN43650
W = WEATHER-PACK
D = DEUTSCH-DT04-2P
M = METRI-PACK CONN.

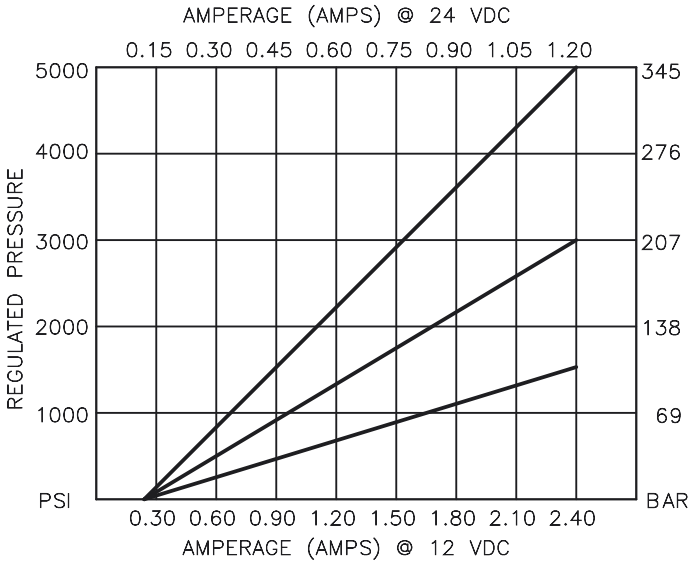

BUCHER hydraulics

WWW.SUMY.IR

ELECTRO–HYDRAULIC, PROPORTIONAL, PRESSURE REDUCING/RELIEVING VALVE.

DESCRIPTION

This unit is a electro–hydraulic, proportional, screw in cartridge style, pilot operated, sliding spool type, high pressure reducing and relieving control valve.

OPERATIONS

When the coil is de–energized, this valve will allow flow from port 2 to port 1 until pressure in port 1 exceeds the spring bias then the spool will shift and block flow from port 2 to port 1 relieving pressure to port 3. When the coil is energized, the armature moves a precision bias spring against the pilot orifice thus varying the pressure at port 1 (reg.) proportional to the current input regardless of the pressure at port 2. Excess pressure at port 1 is relieved to port 3. When the coil current is increased the pressure will increase and when decreased it will decrease. IN THE EVENT OF POWER FAILURE THE VALVE WILL REDUCE REGULATED PRESSURE AT PORT 1 TO 50 PSI.

FEATURES AND BENEFITS

Continuous–duty, very low heat rise & waterproof solenoid coil.
Pressure in tank port (3) will add to the bias spring setting, and is limited to 2000 PSI.
Interchangeable solenoid coils & terminations options available.
Hardened precision fitted spool & sleeve provides reliable, long life.
A unique self aligning (floating) cage provides very low hysteresis and reliable operation.
Very efficient wet – armature solenoid core tube construction.
All external carbon steel parts are plated for longer life against the elements.
All cartridge valves are 100% functionally tested.
Industry common cavity.

BUCHER hydraulics

WWW.SUMY.IR

ELECTRO–HYDRAULIC, PROPORTIONAL, PRESSURE REDUCING/RELIEVING VALVE.

SPECIFICATIONS

OPERATING PRESSURE: 5,000 PSI [350 Bar]
PROOF PRESSURE: 10,000 PSI [700 Bar]
REGULATED PRESSURE: 50 to 5000 PSI [3,5 to 345] See performance chart.
FLOW: 12.0 GPM [46,0 L/M] nominal.
INTERNAL PILOT FLOW: 20 cu.in/min [0,50 l/m] @ 5,000 PSI [350 Bar]
VALVE HOUSINGS: 2500 PSI [175 Bar] = Aluminum – Anodized.
5000 PSI [350 Bar] = Steel – Unplated.
OPERATING TEMPERATURE: –40° to +250° F. [–40° to +120° C.]
OPERATING MEDIA: All general purpose hydraulic fluids such as MIL–H–5606, SAE–#10, SAE–#20, etc.
RESPONSE: The most efficient method to control this valve is with current control and a 50 Hz dither.
POWER REQUIREMENTS: 12 VDC, Operating current 0.2 to 2.4 AMPS.
24 VDC, Operating current 0.1 to 1.2 AMPS.
SEAL KIT: SKN–1031 Buna "N"
SKV–1031 Viton
INSTALLATION: No restrictions.
WEIGHT: 1.95 lb [.88 kg] cartridge with coil only.
VALVE CAVITY: #C1030, See Page 0–032.0.

info.el@bucherhydraulics.com

www.bucherhydraulics.com/commoncavity

© 2015 by Bucher Hydraulics, Inc., 2545 Northwest Parkway, Elgin, Illinois 60124, USA
All rights reserved.
The technical information in this catalog, may contain calculated figures (for reference only) and not actual performance data for this product. Data is provided for the purpose of product description only, and must not be construed as warranted characteristics in the legal sense. The information does not relieve users from the duty of conducting their own evaluations and tests. Because the products are subject to continual improvement, we reserve the right to amend the product specifications contained in this catalogue.

BUCHER hydraulics

PROPORTIONAL PRESSURE REDUCING/ RELIEVING PILOT OPERATED, SLIDING SPOOL

WWW.SUMY.IR

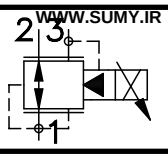

TORQUE:
Steel = 70/75 Ft–Lb. [95/102 Nm]
Aluminum = 55/60 Ft–Lb. [74/81 Nm]

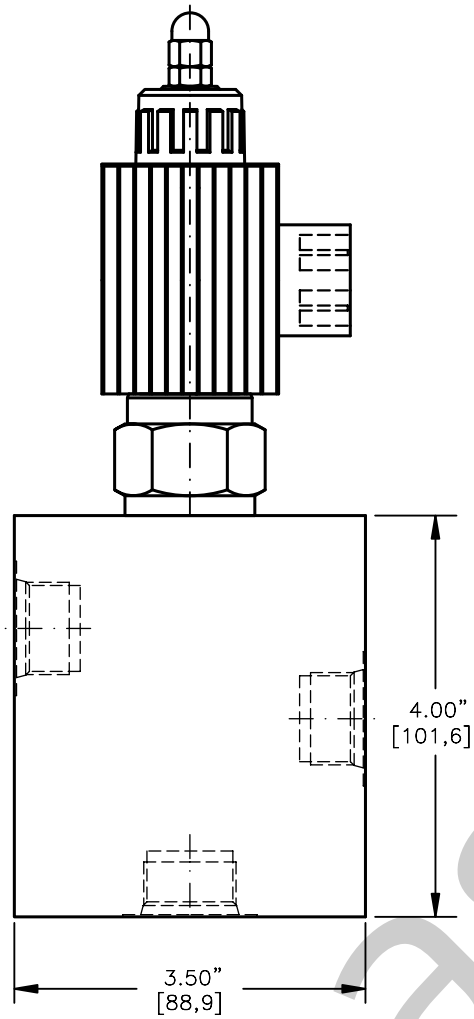

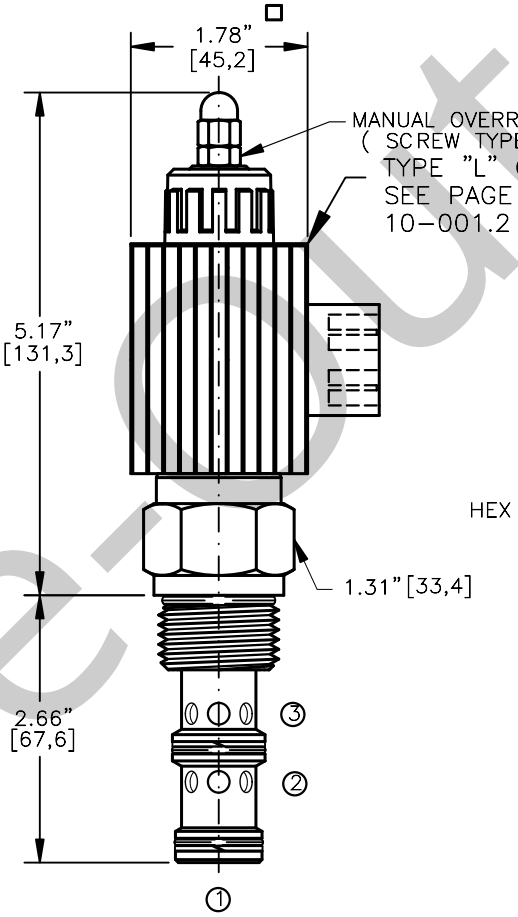

NOTES:
1. FOR ALUMINUM OR STEEL VALVE HOUSING CONFIGURATIONS SEE PAGE 0–033.1
2. SOLENOIDS AVAILABLE WITH DIODES – CONSULT FACTORY.

EPRS–12–X–XX–X–X–XXX X

BASIC

SIZE
12 = 1.062"–12UNF

SEALS
N = BUNA "N"
V = VITON

REGULATED PRESSURE
15 = 50 TO 1500 PSI
30 = 50 TO 3000 PSI
50 = 50 TO 5000 PSI

PORTS
0 = CARTRIDGE
4BX = G 1/2" BSPP
6BX = G 3/4" BSPP
10TX = SAE – #10
12TX = SAE – #12
"A" – ALUM. HOUSING
"S" – STEEL HOUSING

ADJUSTMENT OPTIONS
M = MANUAL OVERRIDE

VOLTAGE AMPS
12D = 12 VDC 3.00
24D = 24 VDC 1.50

TERMINALS
L = 18GA. 24" LEADS
T = SPADE TERM.
B = BOLT TERM.
G = DIN43650
W = WEATHER–PACK
D = DEUTSCH–DT04–2P
M = METRI–PACK CONN.

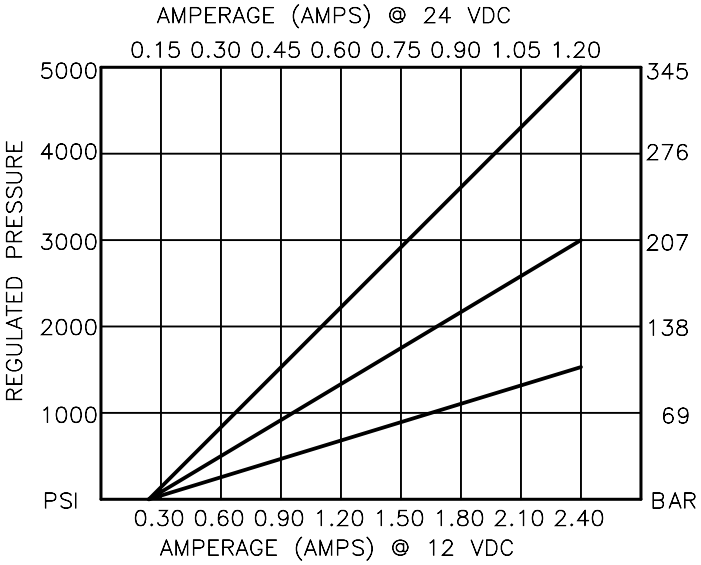

Phase-Out

BUCHER hydraulics

WWW.SUMY.IR

ELECTRO–HYDRAULIC, PROPORTIONAL, PRESSURE REDUCING/RELIEVING VALVE.

DESCRIPTION

This unit is a electro–hydraulic, proportional, screw in cartridge style, pilot operated, sliding spool type, high pressure reducing and relieving control valve.

OPERATIONS

When the coil is de–energized, this valve will allow flow from port 2 to port 1 until pressure in port 1 exceeds the spring bias then the spool will shift and block flow from port 2 to port 1 relieving pressure to port 3. When the coil is energized, the armature moves a precision bias spring against the pilot orifice thus varying the pressure at port 1 (reg.) proportional to the current input regardless of the pressure at port 2. Excess pressure at port 1 is relieved to port 3. When the coil current is increased the pressure will increase and when decreased it will decrease. IN THE EVENT OF POWER FAILURE THE VALVE WILL REDUCE REGULATED PRESSURE AT PORT 1 TO 50 PSI.

FEATURES AND BENEFITS

Continuous–duty, very low heat rise & waterproof solenoid coil.
Pressure in tank port (3) will add to the bias spring setting, and is limited to 2000 PSI.
Interchangeable solenoid coils & terminations options available.
Hardened precision fitted spool & sleeve provides reliable, long life.
A unique self aligning (floating) cage provides very low hysteresis and reliable operation.
Very efficient wet–armature solenoid core tube construction.
All external carbon steel parts are plated for longer life against the elements.
All cartridge valves are 100% functionally tested.

Phase-Out

BUCHER hydraulics

WWW.SUMY.IR

ELECTRO–HYDRAULIC, PROPORTIONAL, PRESSURE REDUCING/RELIEVING VALVE.

SPECIFICATIONS

OPERATING PRESSURE: 5,000 PSI [350 Bar]
PROOF PRESSURE: 10,000 PSI [700 Bar]
REGULATED PRESSURE: 50 to 5000 PSI [3,5 to 345] See performance chart.
FLOW: 24.0 GPM [91,0 L/M] nominal.
INTERNAL PILOT FLOW: 60 cu.in/min [1,0 l/m] @ 5,000 PSI [350 Bar]
VALVE HOUSINGS: 2500 PSI [175 Bar] = Aluminum – Anodized.
5000 PSI [350 Bar] = Steel – Unplated.
OPERATING TEMPERATURE: –40° to +250° F. [–40° to +120° C.]
OPERATING MEDIA: All general purpose hydraulic fluids such as MIL–H–5606, SAE–#10, SAE–#20, etc.
RESPONSE: The most efficient method to control this valve is with current control and a 50 Hz dither.
POWER REQUIREMENTS: 12 VDC, Operating current 0.2 to 2.4 AMPS.
24 VDC, Operating current 0.1 to 1.2 AMPS.
SEAL KIT: SKN–1231 Buna "N"
SKV–1231 Viton
INSTALLATION: No restrictions.
WEIGHT: 2.3 lb [1,2 kg] cartridge with coil only.
VALVE CAVITY: #C1230, See Page 0–033.0.

Phase-Out

info.el@bucherhydraulics.com www.bucherhydraulics.com/commoncavity

© 2015 by Bucher Hydraulics, Inc., 2545 Northwest Parkway, Elgin, Illinois 60124, USA
All rights reserved.
The technical information in this catalog, may contain calculated figures (for reference only) and not actual performance data for this product. Data is provided for the purpose of product description only, and must not be construed as warranted characteristics in the legal sense. The information does not relieve users from the duty of conducting their own evaluations and tests. Because the products are subject to continual improvement, we reserve the right to amend the product specifications contained in this catalogue.

BUCHER hydraulics

PRESSURE SEQUENCE VALVE
POPPET TYPE WITH FREE REVERSE FLOW

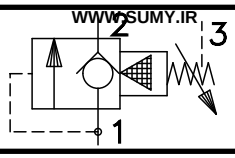

WWW.SUMY.IR

Pat.#5,546,980

TORQUE:
Steel = 55/60 Ft–Lb. [74/81 Nm]
Aluminum = 35/40 Ft–Lb. [47/54 Nm]

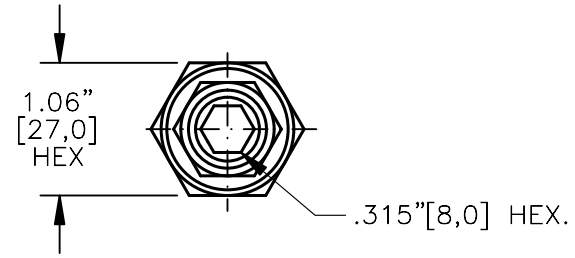

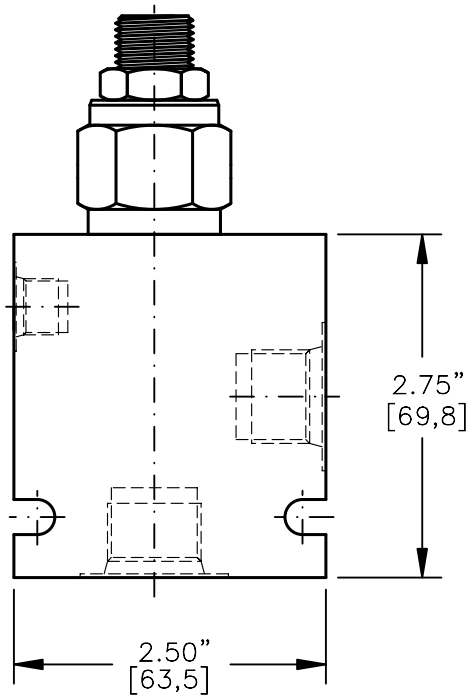

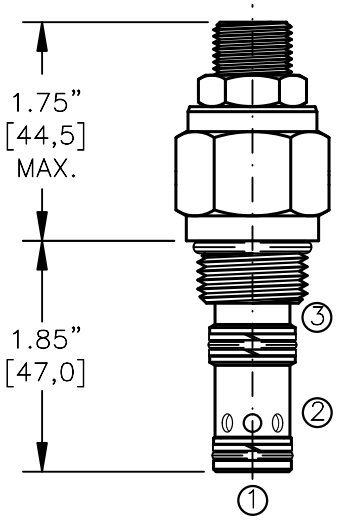

FOR ALUMINUM OR STEEL VALVE HOUSING CONFIGURATIONS SEE PAGE 0–022.1

PSVP–10–X–X–X–XX

BASIC

SIZE
10 = 7/8"–14 UNF

SEALS
N = BUNA "N"
V = VITON

ADJUSTMENT
S = ADJUSTING SCREW
C = CAPPED
T = TAMPERPROOF
K = HANDKNOB
M = METAL HANDKNOB

PRESSURE RANGE
15 = 50 TO 1500 PSI
30 = 50 TO 3000 PSI
50 = 50 TO 5000 PSI

PORTS
0 = CARTRIDGE ONLY
03BX = G 3/8" BSPP
04BX = G 1/2" BSPP
08TX = SAE – #8
10TX = SAE – #10

"A" – ALUM. HOUSING
"S" – STEEL HOUSING

FOR ADJUSTMENT CONTROL OPTIONS SEE PAGE 0–050.0

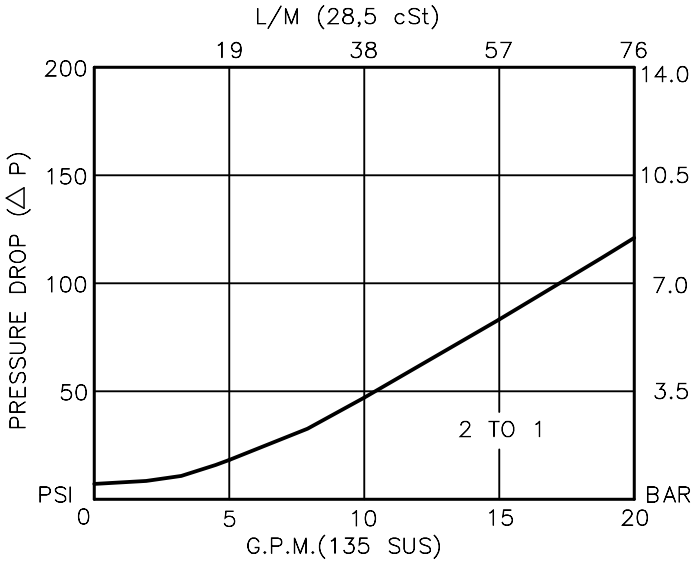

BUCHER hydraulics

WWW.SUMY.IR

PRESSURE SEQUENCE VALVE
POPPET TYPE WITH FREE REVERSE FLOW

DESCRIPTION

This unit is a PILOT OPERATED, SCREW IN CARTRIDGE STYLE, POPPET TYPE WITH BUILT IN FREE REVERSE FLOW CHECK, HYDRAULIC PRESSURE SEQUENCE VALVE,

OPERATIONS

This valve (PSVP) blocks flow from port #1 to port #2 until sufficient pressure is present at port #1 to force the pilot poppet from its seat thus opening the valve.
This sequence cartridge valve offers a free reverse flow from port 2 to port 1.

FEATURES AND BENEFITS

Leakproof screw adjustment.
Pressure in tank port (3) will add to the bias spring setting, and is limited to 2000 PSI.
Adjustment screw can not be backed out of the valve.
Overset protection–pilot spring can not go solid.
Hardened precision fitted poppet & cage provides reliable, long life.
A unique self aligning (floating) cage provides very low hysteresis and reliable operation.
All external carbon steel parts are plated for longer life against the elements.
Valve is available with screw, tamperproof, capped and handknob adjustments.
All cartridge valves are 100% functionally tested.
Industry common cavity.

SPECIFICATIONS

OPERATING PRESSURE: 5,000 PSI [350 Bar]
PROOF PRESSURE: 10,000 PSI [700 Bar]
FLOW: 20.0 GPM [76 L/M] nominal. See performance chart.
INTERNAL LEAKAGE: 5 drops/min (.25 cc/m) @ 85% of crack pressure.
DEFINITION OF CRACK: evident at 0.06 GPM (0.25 LPM)
VALVE HOUSINGS: 2500 PSI [175 Bar] = Aluminum – Anodized.
5000 PSI [350 Bar] = Steel – Unplated.
OPERATING TEMPERATURE: –40° to +250° F. [–40° to +120° C.]
OPERATING MEDIA: All general purpose hydraulic fluids such as MIL–H–5606, SAE–#10, SAE–#20, etc.
INSTALLATION: No restriction.
FILTRATION: 25 microns or better.
SEAL KIT NUMBER: SKN–1028 for buna "N".
SKV–1028 for viton.
WEIGHT: 0.42 lb [.19 kg] cartridge only.
VALVE CAVITY: #C1025, See Page 0–022.0.

info.el@bucherhydraulics.com www.bucherhydraulics.com/commoncavity

© 2015 by Bucher Hydraulics, Inc., 2545 Northwest Parkway, Elgin, Illinois 60124, USA
All rights reserved.
Data is provided for the purpose of product description only, and must not be construed as warranted characteristics in the legal sense. The information does not relieve users from the duty of conducting their own evaluations and tests. Because the products are subject to continual improvement, we reserve the right to amend the product specifications contained in this catalogue.

BUCHER hydraulics

PRESSURE SEQUENCE VALVE
POPPET TYPE, SOFT–SHIFT, HI–LO SEQUENCE

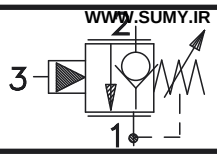

WWW.SUMY.IR

TORQUE:
Steel = 55/60 Ft–Lb. [74/81 Nm]
Aluminum = 35/40 Ft–Lb. [47/54 Nm]

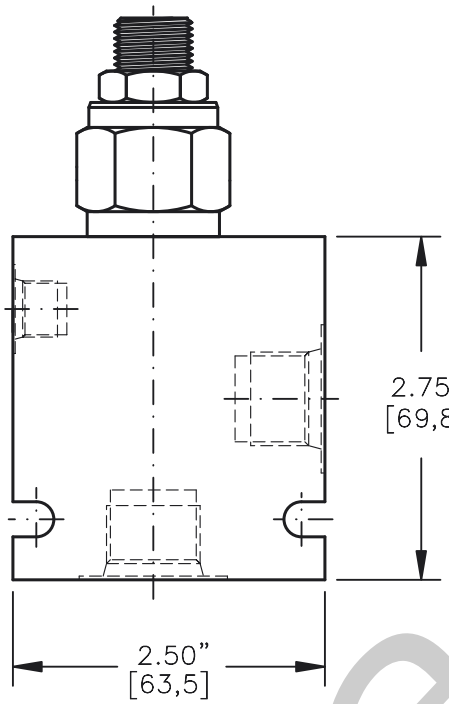

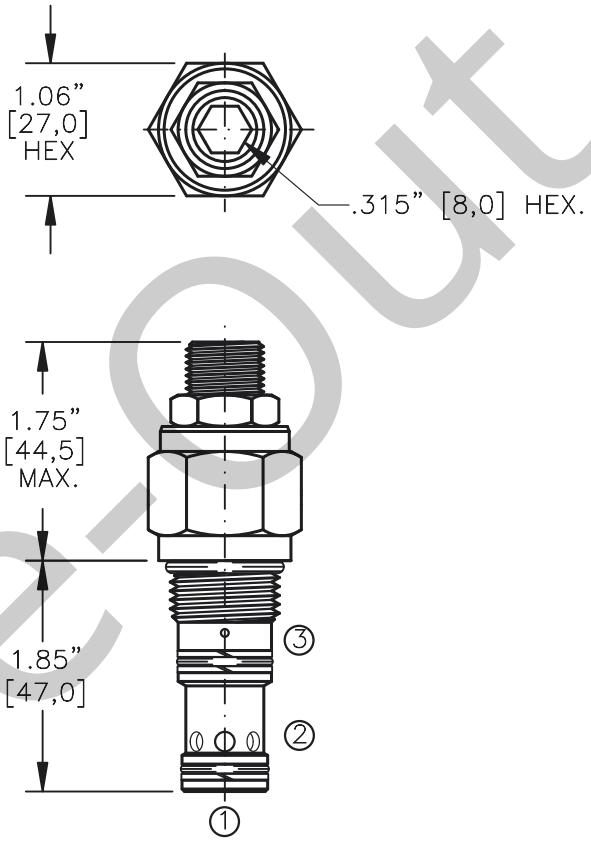

FOR ALUMINUM OR STEEL VALVE HOUSING CONFIGURATIONS SEE PAGE 0–022.1

HLSV–10–X–X–X–XX

BASIC

SIZE
10 = 7/8"–14 UNF

SEALS
N = BUNA "N"
V = VITON

ADJUSTMENT
S = ADJUSTING SCREW
C = CAPPED
T = TAMPERPROOF
K = HANDKNOB
M = METAL HANDKNOB

PRESSURE RANGE
15 = 300 TO 1500 PSI
25 = 1000 TO 2500 PSI
40 = 2000 TO 4000 PSI

PORTS
0 = CARTRIDGE ONLY
03BX = G 3/8" BSPP
04BX = G 1/2" BSPP
08TX = SAE – #8
10TX = SAE – #10

"A" – ALUM. HOUSING
"S" – STEEL HOUSING

FOR ADJUSTMENT CONTROL OPTIONS SEE PAGE 0–050.0

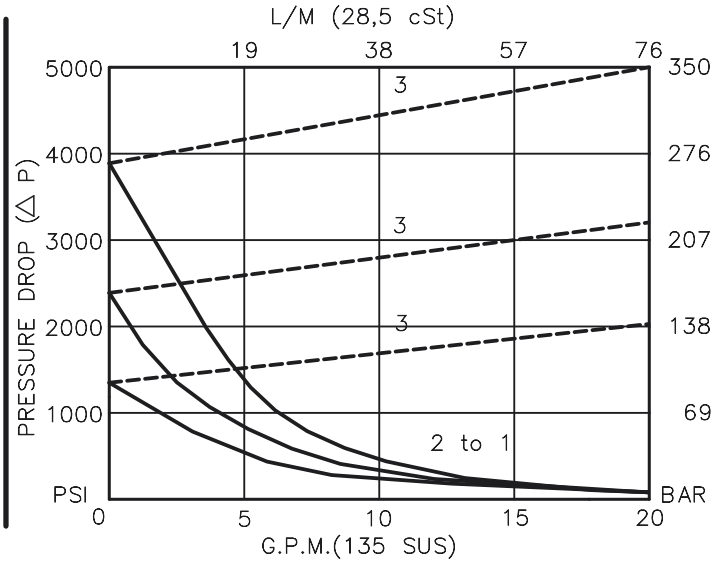

Phase-Out

BUCHER hydraulics

WWW.SUMY.IR

PRESSURE SEQUENCE VALVE
POPPET TYPE, SOFT–SHIFT, HI–LO SEQUENCE.

DESCRIPTION

This unit is a PILOT OPERATED, SCREW IN CARTRIDGE STYLE, POPPET TYPE, ADJUSTABLE, SOFT SHIFT (shock free), HYDRAULIC HI–LO PRESSURE SEQUENCE VALVE.

OPERATIONS

This valve blocks flow from port #2 to port #1 until sufficient pressure is present at port #3 to force the diffirential area poppet to shift thus opening the valve very gradually and without any shock. This valve is used in a two pump circuit to load and unload low press. high volume pump, from a high press. low volume pump pressure signal.

FEATURES AND BENEFITS

Leakproof screw adjustment.
Adjustment screw can not be backed out of the valve.
Overset protection – spring can not go solid.
Hardened precision fitted poppet & cage provides reliable, long life.
A unibody cage construction provides very low hysteresis, dependable and reliable operation.
All external carbon steel parts are plated for longer life against the elements.
Valve is available with screw, tamperproof, capped and handknob adjustments.
All cartridge valves are 100% functionally tested.
Industry common cavity.

SPECIFICATIONS

OPERATING PRESSURE: 5,000 PSI [350 Bar]
PROOF PRESSURE: 10,000 PSI [700 Bar]
FLOW: 20.0 GPM [76 L/M] nominal. See performance chart.
INTERNAL LEAKAGE: 10 cu.in./min [164 cc/m] @ 85% of crack pressure.
DEFINITION OF CRACK: evident at 0.06 GPM [0.25 LPM]
VALVE HOUSINGS: 2500 PSI [175 Bar] = Aluminum – Anodized.
5000 PSI [350 Bar] = Steel – Unplated.
OPERATING TEMPERATURE: –40° to +250° F. [–40° to +120° C.]
OPERATING MEDIA: All general purpose hydraulic fluids such as MIL–H–5606, SAE–#10, SAE–#20, etc.
INSTALLATION: No restriction.
FILTRATION: 25 microns or better.
SEAL KIT NUMBER: SKN–1027 for buna "N".
SKV–1027 for viton.
WEIGHT: 0.46 lb [.21 kg] cartridge only.
VALVE CAVITY: #C1025, See Page 0–022.0.

info.el@bucherhydraulics.com www.bucherhydraulics.com/commoncavity

© 2015 by Bucher Hydraulics, Inc., 2545 Northwest Parkway, Elgin, Illinois 60124, USA
All rights reserved.
Data is provided for the purpose of product description only, and must not be construed as warranted characteristics in the legal sense. The information does not relieve users from the duty of conducting their own evaluations and tests. Because the products are subject to continual improvement, we reserve the right to amend the product specifications contained in this catalogue.

Phase-Out

BUCHER hydraulics

WWW.SUMY.IR

PRESSURE SEQUENCE VALVE
SPOOL TYPE, HI–LO PRESSURE SEQUENCE.

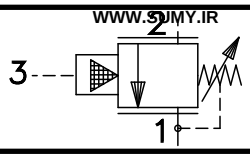

TORQUE:
Steel = 55/60 Ft–Lb. [74/81 Nm]
Aluminum = 35/40 Ft–Lb. [47/54 Nm]

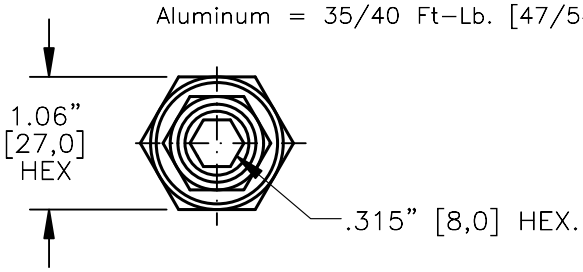

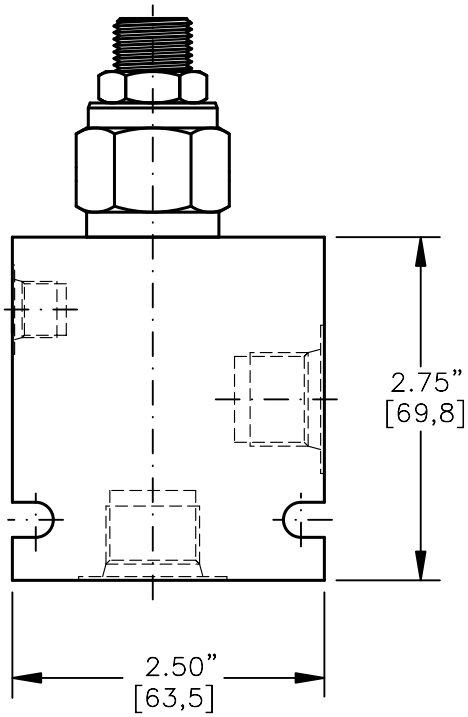

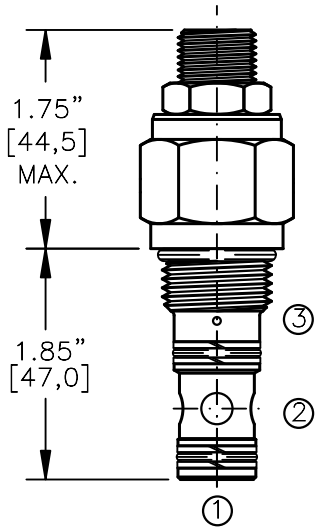

FOR ALUMINUM OR STEEL VALVE HOUSING CONFIGURATIONS SEE PAGE 0–022.1

HLSS–10–X–X–X–XX

BASIC

SIZE
10 = 7/8"–14 UNF

SEALS
N = BUNA "N"
V = VITON

ADJUSTMENT
S = ADJUSTING SCREW
C = CAPPED
T = TAMPERPROOF
K = HANDKNOB
M = METAL HANDKNOB

PRESSURE RANGE
12 = 250 TO 1200 PSI
20 = 800 TO 2000 PSI
40 = 2220 TO 4000 PSI

PORTS
0 = CARTRIDGE ONLY
03BX = G 3/8" BSPP
04BX = G 1/2" BSPP
08TX = SAE – #8
10TX = SAE – #10

"A" – ALUM. HOUSING
"S" – STEEL HOUSING

FOR ADJUSTMENT CONTROL OPTIONS SEE PAGE 0–050.0

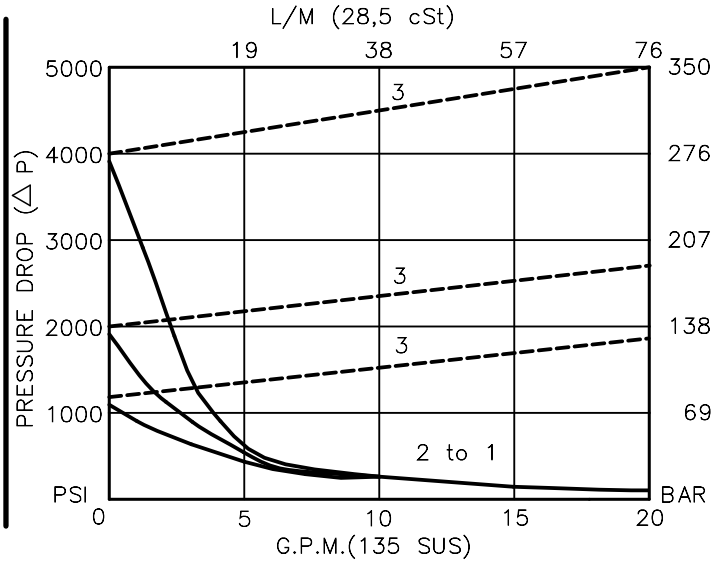

BUCHER hydraulics

WWW.SUMY.IR

PRESSURE SEQUENCE VALVE
SPOOL TYPE, HI–LO PRESSURE SEQUENCE.

DESCRIPTION

This unit is a DIRECT ACTING, SCREW IN CARTRIDGE STYLE, SPOOL TYPE, ADJUSTABLE, SOFT SHIFT (shock free), HYDRAULIC HI–LO PRESSURE SEQUENCE VALVE.

OPERATIONS

This valve blocks flow from port #2 to port #1 until sufficient pressure is present at port #3 to force the diffirential area spool to shift thus opening the valve very gradually and without any shock. This valve is used in a two pump circuit to load and unload low press. high volume pump, from a high press. low volume pump pressure signal.

FEATURES AND BENEFITS

Leakproof screw adjustment.
Adjustment screw can not be backed out of the valve.
Overset protection – spring can not go solid.
Hardened precision fitted spool & cage provides reliable, long life.
A unibody cage construction provides very low hysteresis, dependable and reliable operation.
All external carbon steel parts are plated for longer life against the elements.
Valve is available with screw, tamperproof, capped and handknob adjustments.
All cartridge valves are 100% functionally tested.
Industry common cavity.

SPECIFICATIONS

OPERATING PRESSURE: 5,000 PSI [350 Bar]
PROOF PRESSURE: 10,000 PSI [700 Bar]
FLOW: 20.0 GPM [76 L/M] nominal. See performance chart.
INTERNAL LEAKAGE: 5 cu.in./min [85 cc/m] @ 85% of crack pressure.
DEFINITION OF CRACK: evident at 0.06 GPM [0.25 LPM]
VALVE HOUSINGS: 2500 PSI [175 Bar] = Aluminum – Anodized.
5000 PSI [350 Bar] = Steel – Unplated.
OPERATING TEMPERATURE: –40° to +250° F. [–40° to +120° C.]
OPERATING MEDIA: All general purpose hydraulic fluids such as MIL–H–5606, SAE–#10, SAE–#20, etc.
INSTALLATION: No restriction.
FILTRATION: 25 microns or better.
SEAL KIT NUMBER: SKN–1027 for buna "N".
SKV–1027 for viton.
WEIGHT: 0.46 lb [.21 kg] cartridge only.
VALVE CAVITY: #C1025, See Page 0–022.0.

info.el@bucherhydraulics.com www.bucherhydraulics.com/commoncavity

© 2015 by Bucher Hydraulics, Inc., 2545 Northwest Parkway, Elgin, Illinois 60124, USA
All rights reserved.
Data is provided for the purpose of product description only, and must not be construed as warranted characteristics in the legal sense. The information does not relieve users from the duty of conducting their own evaluations and tests. Because the products are subject to continual improvement, we reserve the right to amend the product specifications contained in this catalogue.

BUCHER hydraulics

WWW.SUMY.IR

PRESSURE SEQUENCE VALVE
PILOT OPERATED, SLIDING SPOOL

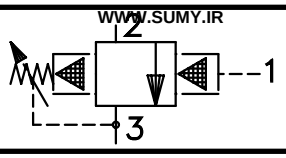

TORQUE:
Steel = 35/40 Ft–Lb. [47/54 Nm]
Aluminum = 25/30 Ft–Lb. [34/41 Nm]

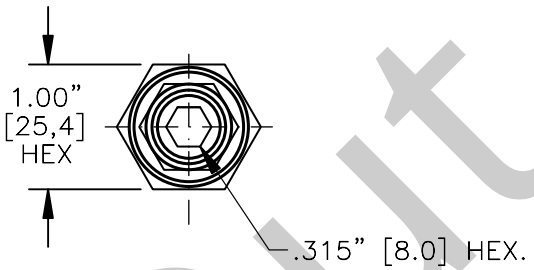

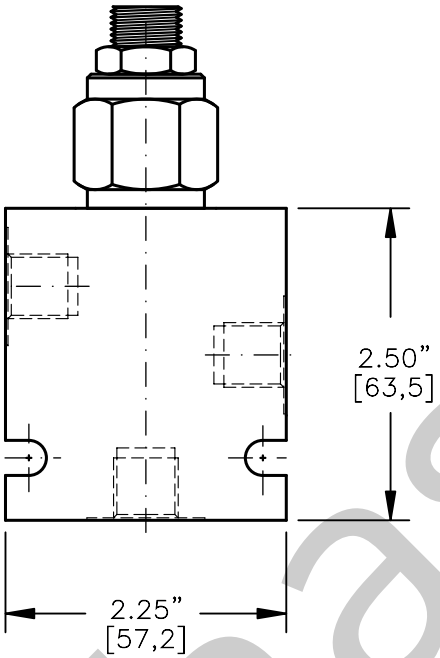

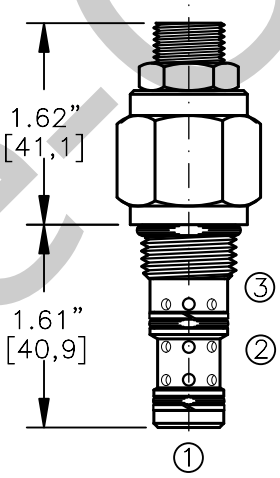

FOR ALUMINUM OR STEEL VALVE HOUSING CONFIGURATIONS SEE PAGE 0–031.1

PSXS–08–X–X–X–XX

BASIC

SIZE
08 = 3/4"–16 UNF

SEALS
N = BUNA "N"
V = VITON

ADJUSTMENT
S = ADJUSTING SCREW
C = CAPPED
T = TAMPERPROOF
K = HANDKNOB
M = METAL HANDKNOB

PRESSURE RANGE
15 = 50 TO 1500 PSI
30 = 50 TO 3000 PSI
50 = 50 TO 5000 PSI

PORTS
0 = CARTRIDGE ONLY
02BX = G 1/4" BSPP
06TX = SAE – #6

"A" – ALUM. HOUSING
"S" – STEEL HOUSING

FOR ADJUSTMENT CONTROL OPTIONS SEE PAGE 0–050.0

CARTRIDGE ONLY

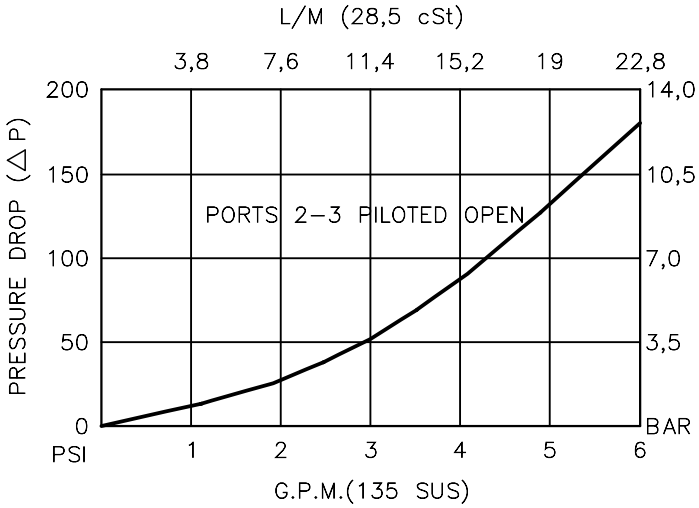

Phase-Out

BUCHER hydraulics

WWW.SUMY.IR

PRESSURE SEQUENCE VALVE
PILOT OPERATED, SLIDING SPOOL

DESCRIPTION

This unit is a PILOT OPERATED, SCREW IN CARTRIDGE STYLE, SLIDING SPOOL TYPE, ADJUSTABLE, EXTERNAL PILOT, HYDRAULIC PRESSURE SEQUENCE VALVE.

OPERATIONS

This valve is a normally closed sequence valve, blocking flow from port 2 to port 3. Port 1 is an external pilot port. When pressure in port 1 exceeds bias spring setting the spool will shift allowing flow to pass from port 2 to port 3.

FEATURES AND BENEFITS

Leakproof screw adjustment.
Pressure in tank port (3) will add to the bias spring setting, and is limited to 2000 PSI.
Adjustment screw can not be backed out of the valve.
Overset protection–pilot spring can not go solid.
Hardened precision fitted poppet & cage provides reliable, long life.
A unique self aligning (floating) cage provides very low hysteresis and reliable operation.
All external carbon steel parts are plated for longer life against the elements.
Valve is available with screw, tamperproof, capped and handknob adjustments.
All cartridge valves are 100% functionally tested.
Industry common cavity.

SPECIFICATIONS

OPERATING PRESSURE: 5,000 PSI [350 Bar]
PROOF PRESSURE: 10,000 PSI [700 Bar]
FLOW: 6.0 GPM [23 L/M] nominal. See performance chart.
INTERNAL LEAKAGE: 5 cu.in./min [.82 cc/m] @ 85% of crack pressure.
DEFINITION OF CRACK: evident at 0.06 GPM [0.25 LPM]
VALVE HOUSINGS: 2500 PSI [175 Bar] = Aluminum – Anodized.
5000 PSI [350 Bar] = Steel – Unplated.
OPERATING TEMPERATURE: –40° to +250° F. [–40° to +120° C.]
OPERATING MEDIA: All general purpose hydraulic fluids such as MIL–H–5606, SAE–#10, SAE–#20, etc.
INSTALLATION: No restriction.
FILTRATION: 25 microns or better.
SEAL KIT NUMBER: SKN–0831 for buna "N".
SKV–0831 for viton.
WEIGHT: 0.30 lb [.14 kg] cartridge only.
VALVE CAVITY: #C0830, See Page 0–031.0.

info.el@bucherhydraulics.com www.bucherhydraulics.com/commoncavity

© 2015 by Bucher Hydraulics, Inc., 2545 Northwest Parkway, Elgin, Illinois 60124, USA
All rights reserved.
Data is provided for the purpose of product description only, and must not be construed as warranted characteristics in the legal sense. The information does not relieve users from the duty of conducting their own evaluations and tests. Because the products are subject to continual improvement, we reserve the right to amend the product specifications contained in this catalogue.

Phase-Out

BUCHER hydraulics

PRESSURE SEQUENCE VALVE
PILOT OPERATED, SLIDING SPOOL

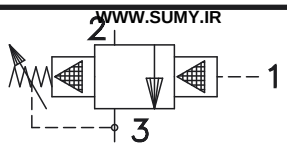

WWW.SUMY.IR

Pat.#5,546,980

TORQUE:
Steel = 55/60 Ft–Lb. [74/81 Nm]
Aluminum = 35/40 Ft–Lb. [47/54 Nm]

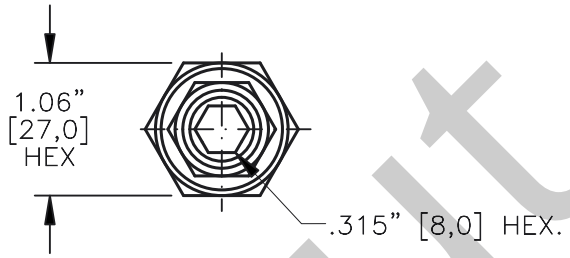

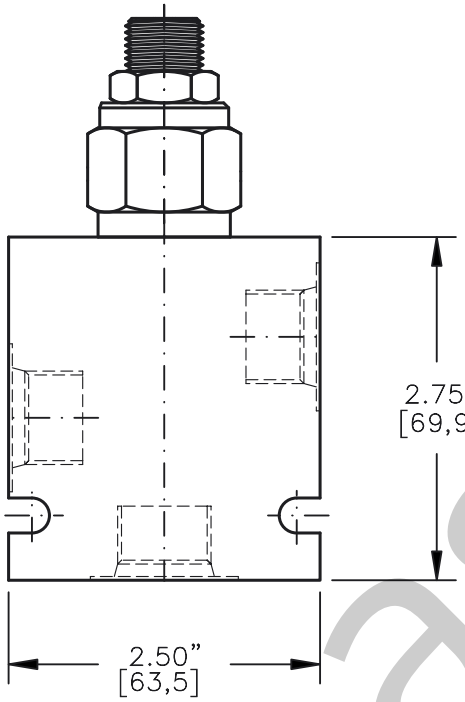

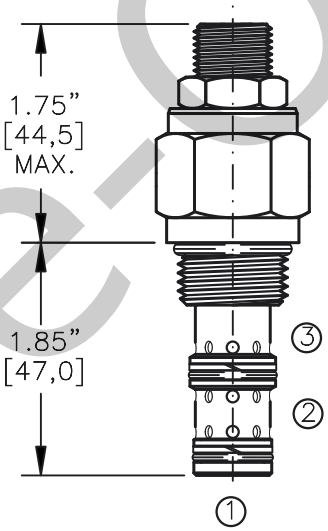

FOR ALUMINUM OR STEEL VALVE HOUSING CONFIGURATIONS SEE PAGE 0–032.1

PSXS–10–X–X–X–XX

BASIC

SIZE
10 = 7/8"–14 UNF

SEALS
N = BUNA "N"
V = VITON

ADJUSTMENT
S = ADJUSTING SCREW
C = CAPPED
T = TAMPERPROOF
K = HANDKNOB
M = METAL HANDKNOB

PRESSURE RANGE
15 = 50 TO 1500 PSI
30 = 50 TO 3000 PSI
50 = 50 TO 5000 PSI

PORTS
0 = CARTRIDGE ONLY
02BX = G 1/4" BSPP
03BX = G 3/8" BSPP
06TX = SAE – #6
08TX = SAE – #8

"A" – ALUM. HOUSING
"S" – STEEL HOUSING

FOR ADJUSTMENT CONTROL OPTIONS SEE PAGE 0–050.0

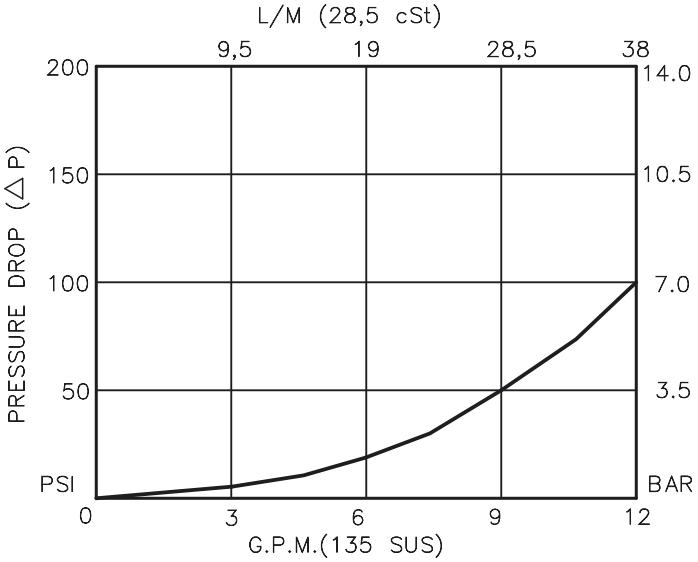

Phase-Out

BUCHER hydraulics

WWW.SUMY.IR

PRESSURE SEQUENCE VALVE
PILOT OPERATED, SLIDING SPOOL

DESCRIPTION

This unit is a PILOT OPERATED, SCREW IN CARTRIDGE STYLE, SLIDING SPOOL TYPE, ADJUSTABLE, EXTERNAL PILOT, HYDRAULIC PRESSURE SEQUENCE VALVE.

OPERATIONS

This valve is a normally closed sequence valve, blocking flow from port 2 to port 3. Port 1 is an external pilot port. When pressure in port 1 exceeds bias spring setting the spool will shift allowing flow to pass from port 2 to port 3.

FEATURES AND BENEFITS

Leakproof screw adjustment.
Pressure in tank port (3) will add to the bias spring setting, and is limited to 2000 PSI.
Adjustment screw can not be backed out of the valve.
Overset protection–pilot spring can not go solid.
Hardened precision fitted poppet & cage provides reliable, long life.
A unique self aligning (floating) cage provides very low hysteresis and reliable operation.
All external carbon steel parts are plated for longer life against the elements.
Valve is available with screw, tamperproof, capped and handknob adjustments.
All cartridge valves are 100% functionally tested.
Industry common cavity.

SPECIFICATIONS

OPERATING PRESSURE: 5,000 PSI [350 Bar]
PROOF PRESSURE: 10,000 PSI [700 Bar]
FLOW: 12.0 GPM [46 L/M] nominal. See performance chart.
INTERNAL LEAKAGE: 5 cu.in./min [.82 cc/m] @ 85% of crack pressure.
DEFINITION OF CRACK: evident at 0.06 GPM [0.25 LPM]
VALVE HOUSINGS: 2500 PSI [175 Bar] = Aluminum – Anodized.
5000 PSI [350 Bar] = Steel – Unplated.
OPERATING TEMPERATURE: –40° to +250° F. [–40° to +120° C.]
OPERATING MEDIA: All general purpose hydraulic fluids such as MIL–H–5606, SAE–#10, SAE–#20, etc.
INSTALLATION: No restriction.
FILTRATION: 25 microns or better.
SEAL KIT NUMBER: SKN–1031 for buna "N".
SKV–1031 for viton.
WEIGHT: 0.42 lb [.19 kg] cartridge only.
VALVE CAVITY: #C1030, See Page 0–032.0.

info.el@bucherhydraulics.com www.bucherhydraulics.com/commoncavity

© 2015 by Bucher Hydraulics, Inc., 2545 Northwest Parkway, Elgin, Illinois 60124, USA
All rights reserved.
Data is provided for the purpose of product description only, and must not be construed as warranted characteristics in the legal sense. The information does not relieve users from the duty of conducting their own evaluations and tests. Because the products are subject to continual improvement, we reserve the right to amend the product specifications contained in this catalogue.

Phase-Out

BUCHER hydraulics

PRESSURE SEQUENCE VALVE
PILOT OPERATED, SLIDING SPOOL

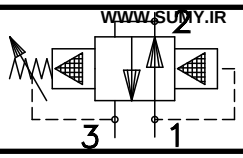

WWW.SUMY.IR

TORQUE:
Steel = 35/40 Ft–Lb. [47/54 Nm]
Aluminum = 25/30 Ft–Lb. [34/41 Nm]

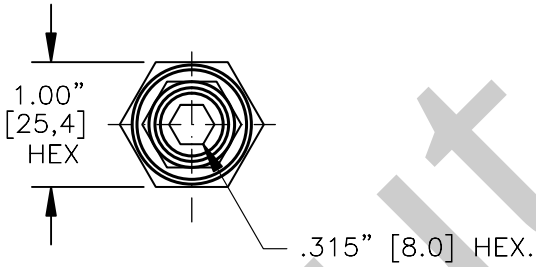

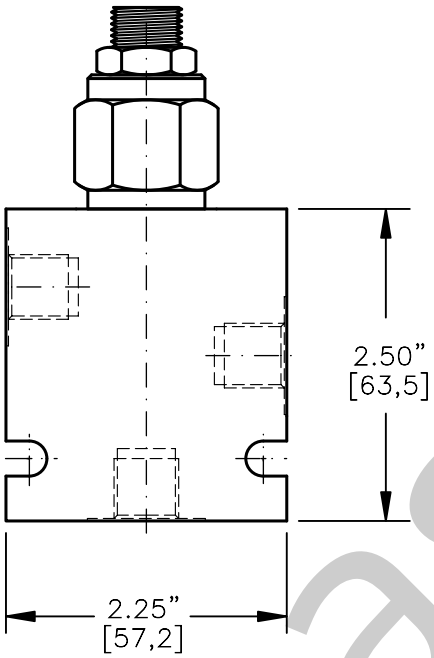

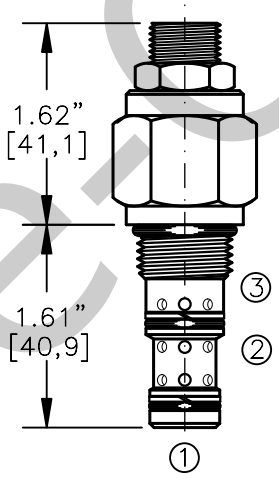

Phase-Out

FOR ALUMINUM OR STEEL VALVE HOUSING CONFIGURATIONS SEE PAGE 0–031.1

PSOS–08–X–S–X–XX

BASIC

SIZE
08 = 3/4"–16 UNF

SEALS
N = BUNA "N"
V = VITON

ADJUSTMENT
S = ADJUSTING SCREW
C = CAPPED
T = TAMPERPROOF
K = HANDKNOB
M = METAL HANDKNOB

PRESSURE RANGE
15 = 50 TO 1500 PSI
30 = 50 TO 3000 PSI
50 = 50 TO 5000 PSI

PORTS
0 = CARTRIDGE ONLY
02BX = G 1/4" BSPP
06TX = SAE – #6
"A" – ALUM. HOUSING
"S" – STEEL HOUSING

FOR ADJUSTMENT CONTROL OPTIONS SEE PAGE 0–050.0

CARTRIDGE ONLY

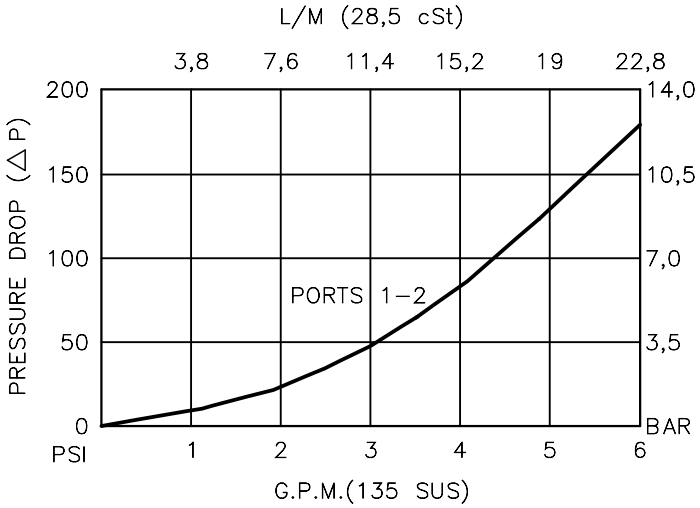

BUCHER hydraulics

WWW.SUMY.IR

PRESSURE SEQUENCE VALVE
PILOT OPERATED, SLIDING SPOOL

DESCRIPTION

This unit is a PILOT OPERATED, SCREW IN CARTRIDGE STYLE, SLIDING SPOOL TYPE, ADJUSTABLE, INTERNAL PILOT, HYDRAULIC PRESSURE SEQUENCE VALVE.

OPERATIONS

This valve is a normally open sequence valve, allowing flow from port 1 to port 2 and blocking flow in port 2 to port 3. When pressure in port 1 exceedes bias spring setting the spool will shift allowing no flow from port 1 to port 2 and pass flow from port 2 to port 3.

FEATURES AND BENEFITS

Leakproof screw adjustment.
Pressure in tank port (3) will add to the bias spring setting, and is limited to 2000 PSI.
Adjustment screw can not be backed out of the valve.
Overset protection–pilot spring can not go solid.
Hardened precision fitted poppet & cage provides reliable, long life.
A unique self aligning (floating) cage provides very low hysteresis and reliable operation.
All external carbon steel parts are plated for longer life against the elements.
Valve is available with screw, tamperproof, capped and handknob adjustments.
All cartridge valves are 100% functionally tested.
Industry common cavity.

SPECIFICATIONS

OPERATING PRESSURE: 5,000 PSI [350 Bar]
PROOF PRESSURE: 10,000 PSI [700 Bar]
FLOW: 6.0 GPM [23 L/M] nominal. See performance chart.
INTERNAL LEAKAGE: 5 cu.in./min [.82 cc/m] @ 85% of crack pressure.
DEFINITION OF CRACK: evident at 0.06 GPM [0.25 LPM]
VALVE HOUSINGS: 2500 PSI [175 Bar] = Aluminum – Anodized.
5000 PSI [350 Bar] = Steel – Unplated.
OPERATING TEMPERATURE: –40° to +250° F. [–40° to +120° C.]
OPERATING MEDIA: All general purpose hydraulic fluids such as MIL–H–5606, SAE–#10, SAE–#20, etc.
INSTALLATION: No restriction.
FILTRATION: 25 microns or better.
SEAL KIT NUMBER: SKN–0831 for buna "N".
SKV–0831 for viton.
WEIGHT: 0.30 lb [.14 kg] cartridge only.
VALVE CAVITY: #C0830, See Page 0–031.0.

info.el@bucherhydraulics.com www.bucherhydraulics.com/commoncavity

© 2015 by Bucher Hydraulics, Inc., 2545 Northwest Parkway, Elgin, Illinois 60124, USA
All rights reserved.
Data is provided for the purpose of product description only, and must not be construed as warranted characteristics in the legal sense. The information does not relieve users from the duty of conducting their own evaluations and tests. Because the products are subject to continual improvement, we reserve the right to amend the product specifications contained in this catalogue.

Phase-Out

BUCHER hydraulics

PRESSURE SEQUENCE VALVE
PILOT OPERATED, SLIDING SPOOL

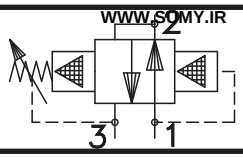

WWW.SOMY.IR

Pat.#5,546,980

TORQUE:
Steel = 55/60 Ft–Lb. [74/81 Nm]
Aluminum = 35/40 Ft–Lb. [47/54 Nm]

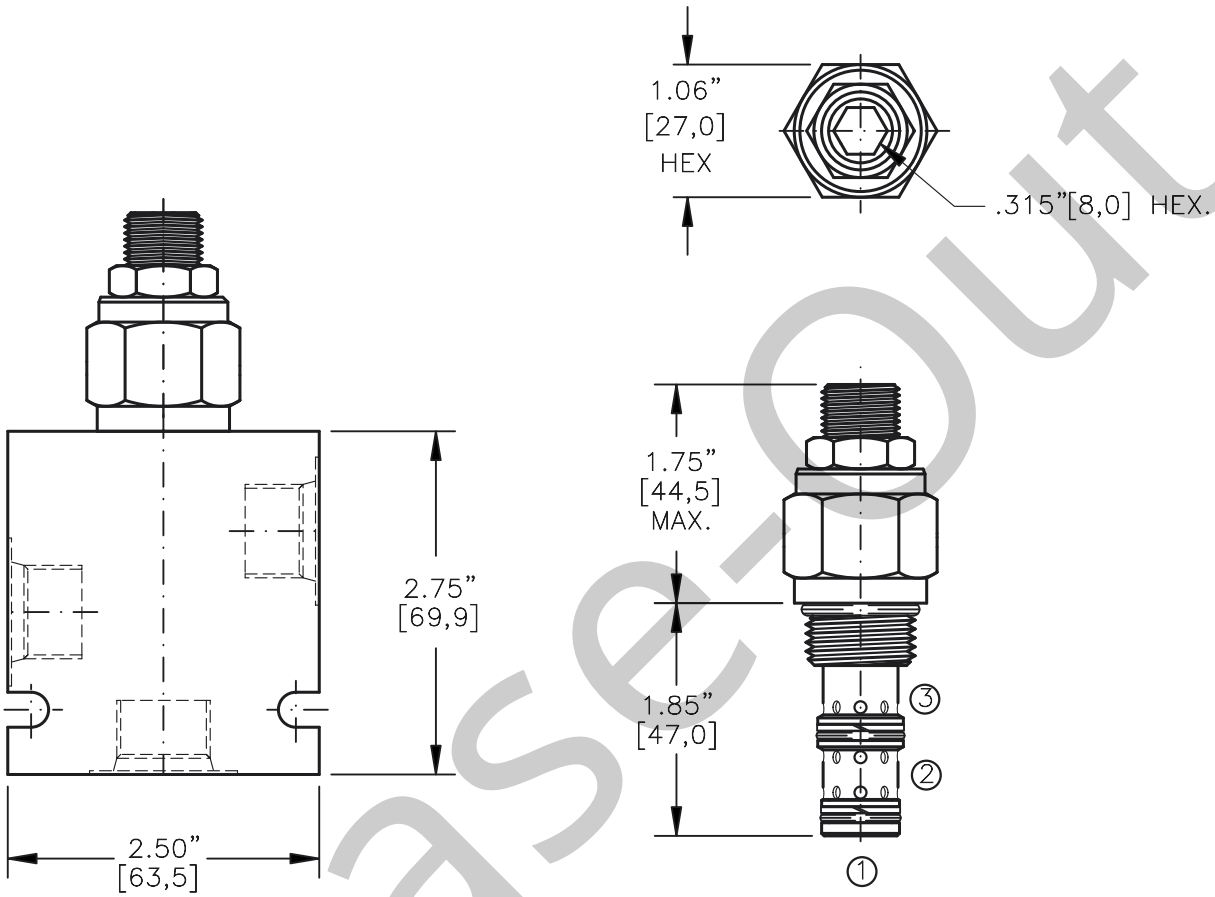

Phase-Out

FOR ALUMINUM OR STEEL VALVE HOUSING CONFIGURATIONS SEE PAGE 0–032.1

PSOS–10–X–X–X–XX

BASIC

SIZE
10 = 7/8"–14 UNF

SEALS
N = BUNA "N"
V = VITON

ADJUSTMENT
S = ADJUSTING SCREW
C = CAPPED
T = TAMPERPROOF
K = HANDKNOB
M = METAL HANDKNOB

PRESSURE RANGE
15 = 50 TO 1500 PSI
30 = 50 TO 3000 PSI
50 = 50 TO 5000 PSI

PORTS
0 = CARTRIDGE ONLY
02BX = G 1/4" BSPP
03BX = G 3/8" BSPP
06TX = SAE – #6
08TX = SAE – #8

"A" – ALUM. HOUSING
"S" – STEEL HOUSING

FOR ADJUSTMENT CONTROL OPTIONS SEE PAGE 0–050.0

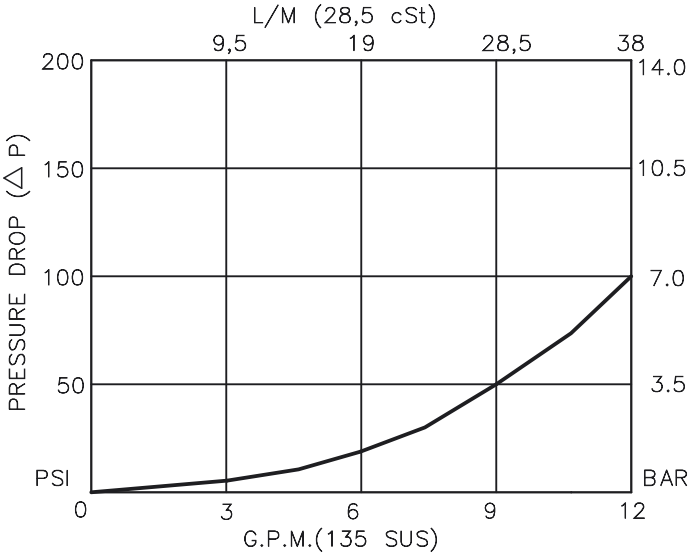

BUCHER hydraulics

WWW.SUMY.IR

PRESSURE SEQUENCE VALVE
PILOT OPERATED, SLIDING SPOOL

DESCRIPTION
This unit is a PILOT OPERATED, SCREW IN CARTRIDGE STYLE, SLIDING SPOOL TYPE, ADJUSTABLE, INTERNAL PILOT, HYDRAULIC PRESSURE SEQUENCE VALVE.

OPERATIONS
This valve is a normally open sequence valve, allowing flow port 1 to port 2 and blocking flow port 2 to port 3. When pressure in port 1 exceedes bias spring setting the spool will shift allowing no flow from port 1 to port 2 and pass flow from port 2 to port 3.

FEATURES AND BENEFITS
Leakproof screw adjustment.
Pressure in tank port (3) will add to the bias spring setting, and is limited to 2000 PSI.
Adjustment screw can not be backed out of the valve.
Overset protection–pilot spring can not go solid.
Hardened precision fitted poppet & cage provides reliable, long life.
A unique self aligning (floating) cage provides very low hysteresis and reliable operation.
All external carbon steel parts are plated for longer life against the elements.
Valve is available with screw, tamperproof, capped and handknob adjustments.
All cartridge valves are 100% functionally tested.
Industry common cavity.

SPECIFICATIONS
OPERATING PRESSURE: 5,000 PSI [350 Bar]
PROOF PRESSURE: 10,000 PSI [700 Bar]
FLOW: 12.0 GPM [46 L/M] nominal. See performance chart.
INTERNAL LEAKAGE: 5 cu.in./min [.82 cc/m] @ 85% of crack pressure.
DEFINITION OF CRACK: evident at 0.06 GPM [0.25 LPM]
VALVE HOUSINGS: 2500 PSI [175 Bar] = Aluminum – Anodized.
5000 PSI [350 Bar] = Steel – Unplated.
OPERATING TEMPERATURE: –40° to +250° F. [–40° to +120° C.]
OPERATING MEDIA: All general purpose hydraulic fluids such as MIL–H–5606, SAE–#10, SAE–#20, etc.
INSTALLATION: No restriction.
FILTRATION: 25 microns or better.
SEAL KIT NUMBER: SKN–1031 for buna "N".
SKV–1031 for viton.
WEIGHT: 0.42 lb [.19 kg] cartridge only.
VALVE CAVITY: #C1030, See Page 0–032.0.

info.el@bucherhydraulics.com www.bucherhydraulics.com/commoncavity

© 2015 by Bucher Hydraulics, Inc., 2545 Northwest Parkway, Elgin, Illinois 60124, USA
All rights reserved.
Data is provided for the purpose of product description only, and must not be construed as warranted characteristics in the legal sense. The information does not relieve users from the duty of conducting their own evaluations and tests. Because the products are subject to continual improvement, we reserve the right to amend the product specifications contained in this catalogue.

Phase-Out

BUCHER hydraulics

PRESSURE SEQUENCE VALVE
PILOT OPERATED, SLIDING SPOOL

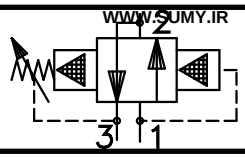

WWW.SUMY.IR

TORQUE:
Steel = 35/40 Ft–Lb. [47/54 Nm]
Aluminum = 25/30 Ft–Lb. [34/41 Nm]

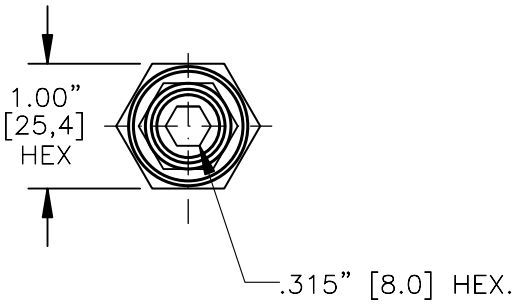

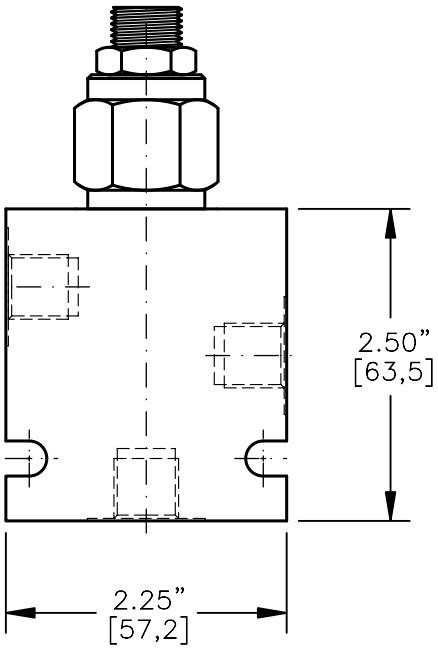

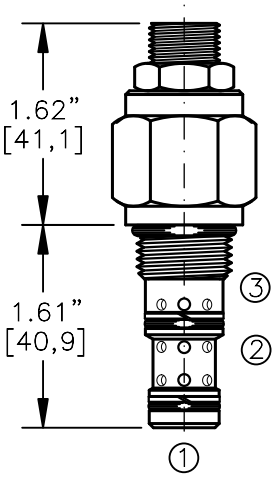

FOR ALUMINUM OR STEEL VALVE HOUSING CONFIGURATIONS SEE PAGE 0–031.1

PSCS–08–X–X–X–XX

BASIC

SIZE
08 = 3/4"–16 UNF

SEALS
N = BUNA "N"
V = VITON

ADJUSTMENT
S = ADJUSTING SCREW
C = CAPPED
T = TAMPERPROOF
K = HANDKNOB
M = METAL HANDKNOB

PRESSURE RANGE
15 = 50 TO 1500 PSI
30 = 50 TO 3000 PSI
50 = 50 TO 5000 PSI

PORTS
0 = CARTRIDGE ONLY
02BX = G 1/4" BSPP
06TX = SAE – #6

"A" – ALUM. HOUSING
"S" – STEEL HOUSING

FOR ADJUSTMENT CONTROL OPTIONS SEE PAGE 0–050.0

CARTRIDGE ONLY

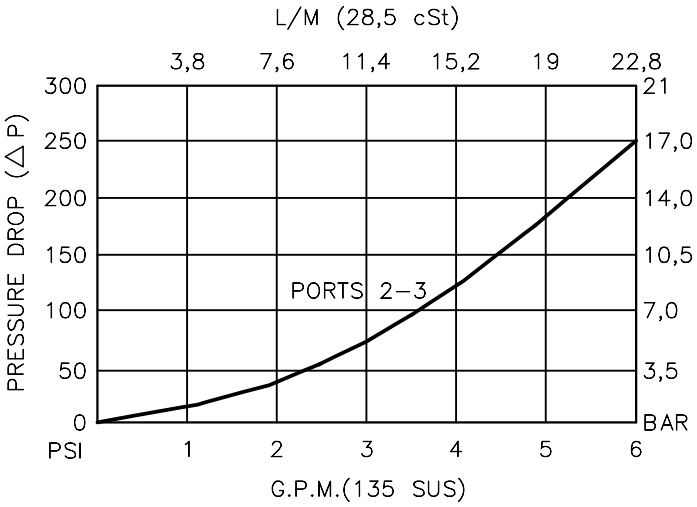

BUCHER hydraulics

WWW.SUMY.IR

PRESSURE SEQUENCE VALVE
PILOT OPERATED, SLIDING SPOOL

DESCRIPTION

This unit is a PILOT OPERATED, SCREW IN CARTRIDGE STYLE, SLIDING SPOOL TYPE, ADJUSTABLE, INTERNAL PILOT, HYDRAULIC PRESSURE SEQUENCE VALVE.

OPERATIONS

This valve is a normally closed sequence valve, blocking flow from port 1 to port 2. When pressure in port 1 exceeds bias spring setting the spool will shift allowing flow from port 1 to port 2 and blocking flow from port 2 to port 3.

FEATURES AND BENEFITS

Leakproof screw adjustment.
Pressure in tank port (3) will add to the bias spring setting, and is limited to 2000 PSI.
Adjustment screw can not be backed out of the valve.
Overset protection–pilot spring can not go solid.
Hardened precision fitted poppet & cage provides reliable, long life.
A unique self aligning (floating) cage provides very low hysteresis and reliable operation.
All external carbon steel parts are plated for longer life against the elements.
Valve is available with screw, tamperproof, capped and handknob adjustments.
All cartridge valves are 100% functionally tested.
Industry common cavity.

SPECIFICATIONS

OPERATING PRESSURE: 5,000 PSI [350 Bar]
PROOF PRESSURE: 10,000 PSI [700 Bar]
FLOW: 6.0 GPM [23 L/M] nominal. See performance chart.
INTERNAL LEAKAGE: 5 cu.in./min [.82 cc/m] @ 85% of crack pressure.
DEFINITION OF CRACK: evident at 0.06 GPM [0.25 LPM]
VALVE HOUSINGS: 2500 PSI [175 Bar] = Aluminum – Anodized.
5000 PSI [350 Bar] = Steel – Unplated.
OPERATING TEMPERATURE: –40° to +250° F. [–40° to +120° C.]
OPERATING MEDIA: All general purpose hydraulic fluids such as MIL–H–5606, SAE–#10, SAE–#20, etc.
INSTALLATION: No restriction.
FILTRATION: 25 microns or better.
SEAL KIT NUMBER: SKN–0831 for buna "N".
SKV–0831 for viton.
WEIGHT: 0.30 lb [.14 kg] cartridge only.
VALVE CAVITY: #C0830, See Page 0–031.0.

info.el@bucherhydraulics.com www.bucherhydraulics.com/commoncavity

© 2015 by Bucher Hydraulics, Inc., 2545 Northwest Parkway, Elgin, Illinois 60124, USA
All rights reserved.
Data is provided for the purpose of product description only, and must not be construed as warranted characteristics in the legal sense. The information does not relieve users from the duty of conducting their own evaluations and tests. Because the products are subject to continual improvement, we reserve the right to amend the product specifications contained in this catalogue.

BUCHER hydraulics

PRESSURE SEQUENCE VALVE
PILOT OPERATED, SLIDING SPOOL

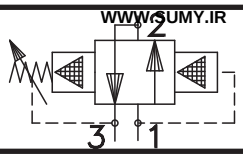

WWW.SUMY.IR

Pat.#5,546,980

TORQUE:
Steel = 55/60 Ft–Lb. [74/81 Nm]
Aluminum = 35/40 Ft–Lb. [47/54 Nm]

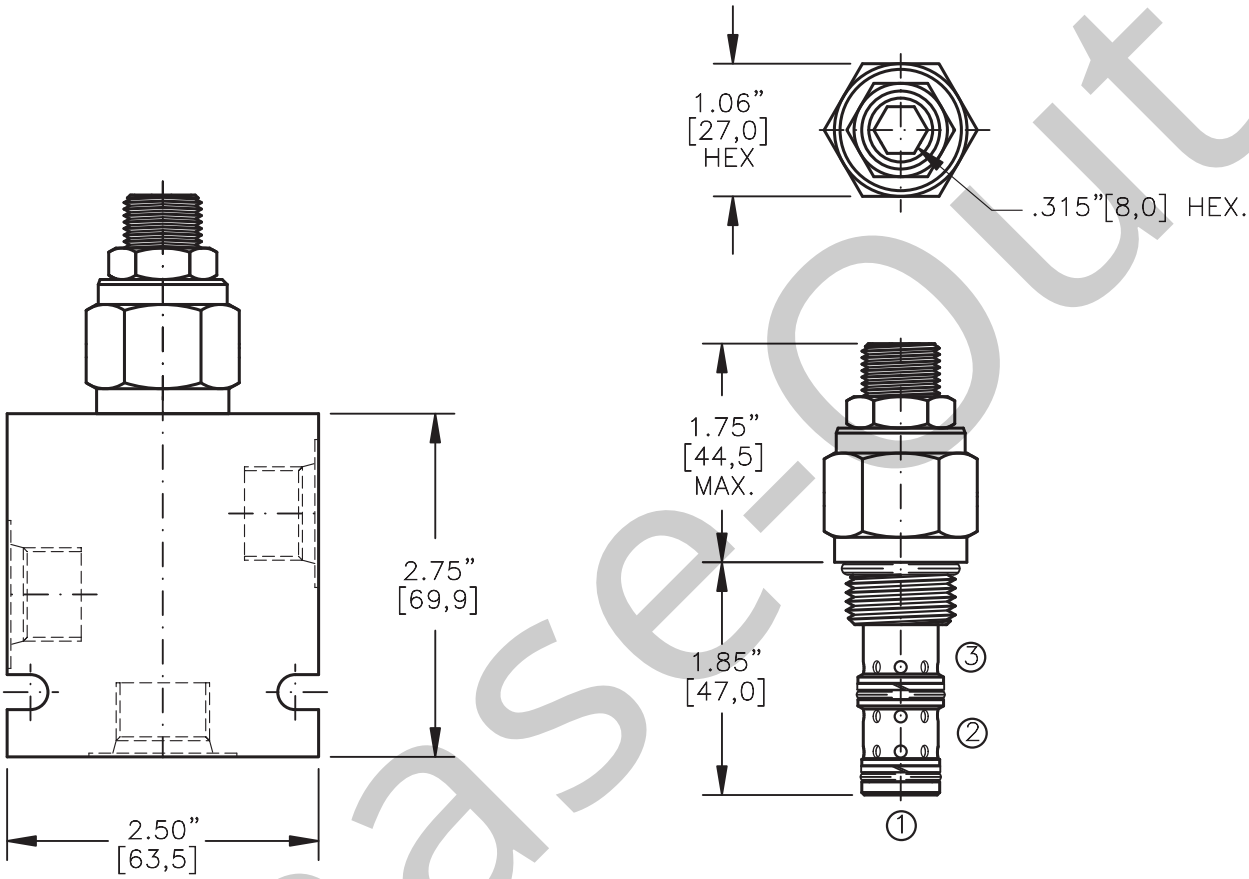

FOR ALUMINUM OR STEEL VALVE HOUSING CONFIGURATIONS SEE PAGE 0–032.1

PSCS–10–X–X–X–XX

BASIC

SIZE
10 = 7/8"–14 UNF

SEALS
N = BUNA "N"
V = VITON

ADJUSTMENT
S = ADJUSTING SCREW
C = CAPPED
T = TAMPERPROOF
K = HANDKNOB
M = METAL HANDKNOB

PRESSURE RANGE
15 = 50 TO 1500 PSI
30 = 50 TO 3000 PSI
50 = 50 TO 5000 PSI

PORTS
0 = CARTRIDGE ONLY
02BX = G 1/4" BSPP
03BX = G 3/8" BSPP
06TX = SAE – #6
08TX = SAE – #8

"A" – ALUM. HOUSING
"S" – STEEL HOUSING

FOR ADJUSTMENT CONTROL OPTIONS SEE PAGE 0–050.0

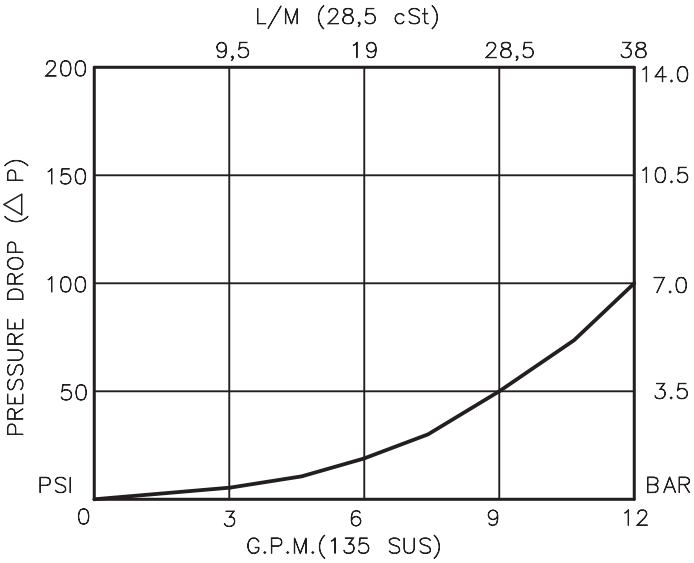

Phase-Out

BUCHER hydraulics

WWW.SUMY.IR

PRESSURE SEQUENCE VALVE
PILOT OPERATED, SLIDING SPOOL

DESCRIPTION

This unit is a PILOT OPERATED, SCREW IN CARTRIDGE STYLE, SLIDING SPOOL TYPE, ADJUSTABLE, INTERNAL PILOT, HYDRAULIC PRESSURE SEQUENCE VALVE.

OPERATIONS

This valve is a normally closed sequence valve, blocking flow from port 1 to port 2. When pressure in port 1 exceeds bias spring setting the spool will shift allowing flow from port 1 to port 2 and blocking flow from port 2 to port 3.

FEATURES AND BENEFITS

Leakproof screw adjustment.
Pressure in tank port (3) will add to the bias spring setting, and is limited to 2000 PSI.
Adjustment screw can not be backed out of the valve.
Overset protection–pilot spring can not go solid.
Hardened precision fitted poppet & cage provides reliable, long life.
A unique self aligning (floating) cage provides very low hysteresis and reliable operation.
All external carbon steel parts are plated for longer life against the elements.
Valve is available with screw, tamperproof, capped and handknob adjustments.
All cartridge valves are 100% functionally tested.
Industry common cavity.

SPECIFICATIONS

OPERATING PRESSURE: 5,000 PSI [350 Bar]
PROOF PRESSURE: 10,000 PSI [700 Bar]
FLOW: 12.0 GPM [46 L/M] nominal. See performance chart.
INTERNAL LEAKAGE: 5 cu.in./min [.82 cc/m] @ 85% of crack pressure.
DEFINITION OF CRACK: evident at 0.06 GPM [0.25 LPM]
VALVE HOUSINGS: 2500 PSI [175 Bar] = Aluminum – Anodized.
5000 PSI [350 Bar] = Steel – Unplated.
OPERATING TEMPERATURE: –40° to +250° F. [–40° to +120° C.]
OPERATING MEDIA: All general purpose hydraulic fluids such as MIL–H–5606, SAE–#10, SAE–#20, etc.
INSTALLATION: No restriction.
FILTRATION: 25 microns or better.
SEAL KIT NUMBER: SKN–1031 for buna "N".
SKV–1031 for viton.
WEIGHT: 0.42 lb [.19 kg] cartridge only.
VALVE CAVITY: #C1030, See Page 0–032.0.

Phase-Out

info.el@bucherhydraulics.com www.bucherhydraulics.com/commoncavity

© 2015 by Bucher Hydraulics, Inc., 2545 Northwest Parkway, Elgin, Illinois 60124, USA
All rights reserved.
Data is provided for the purpose of product description only, and must not be construed as warranted characteristics in the legal sense. The information does not relieve users from the duty of conducting their own evaluations and tests. Because the products are subject to continual improvement, we reserve the right to amend the product specifications contained in this catalogue.

Alternative product: PSVP-10-... (520-P-060720)

BUCHER hydraulics

PRESSURE BREAKER/SEQUENCE VALVE POPPET TYPE WITH FREE REVERSE FLOW

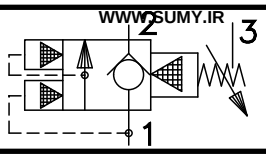

WWW.SUMY.IR

Pat.#5,546,980

TORQUE:
Steel = 55/60 Ft–Lb. [74/81 Nm]
Aluminum = 35/40 Ft–Lb. [47/54 Nm]

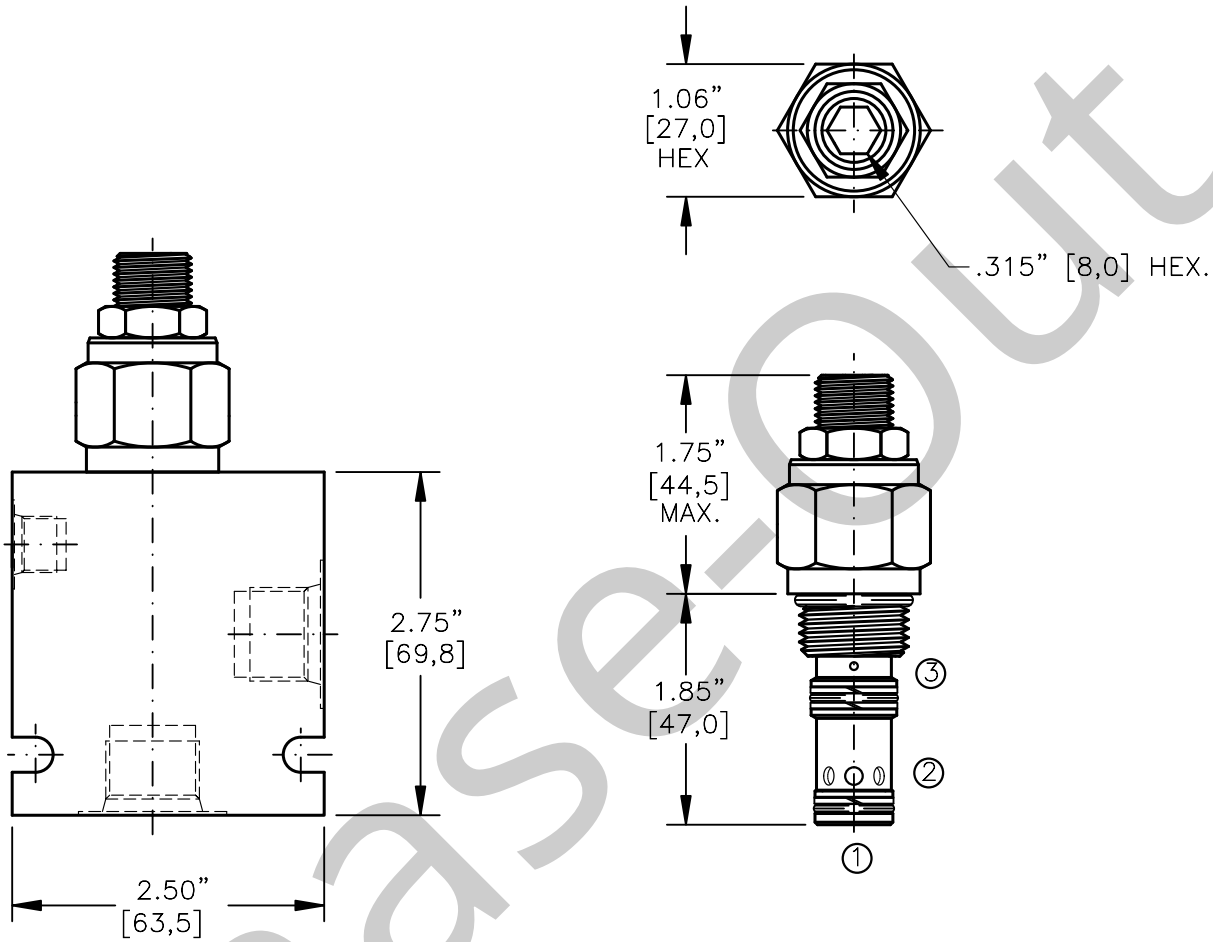

Phase-Out

FOR ALUMINUM OR STEEL VALVE HOUSING CONFIGURATIONS SEE PAGE 0–022.1

PBVP–10–X–X–X–XX

BASIC

SIZE
10 = 7/8"–14 UNF

SEALS
N = BUNA "N"
V = VITON

ADJUSTMENT
S = ADJUSTING SCREW
C = CAPPED
T = TAMPERPROOF
K = HANDKNOB
M = METAL HANDKNOB

PRESSURE RANGE
15 = 50 TO 1500 PSI
30 = 50 TO 3000 PSI
50 = 50 TO 5000 PSI

PORTS
0 = CARTRIDGE ONLY
03BX = G 3/8" BSPP
04BX = G 1/2" BSPP
08TX = SAE – #8
10TX = SAE – #10

"A" – ALUM. HOUSING
"S" – STEEL HOUSING

FOR ADJUSTMENT CONTROL OPTIONS SEE PAGE 0–050.0

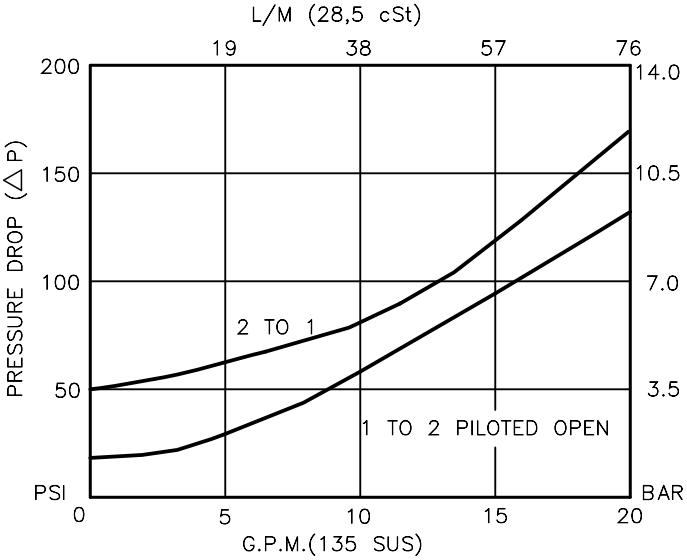

BUCHER hydraulics

WWW.SUMY.IR

PRESSURE BREAKER/SEQUENCE VALVE
POPPET TYPE WITH FREE REVERSE FLOW

DESCRIPTION

This unit is a PILOT OPERATED, SCREW IN CARTRIDGE STYLE, POPPET TYPE WITH BUILT IN FREE REVERSE FLOW CHECK, HYDRAULIC PRESSURE BREAKER/SEQUENCE VALVE.

OPERATIONS

This valve (PBVP) blocks flow from port #1 to port #2 until sufficient pressure is present at port #1 to force the pilot poppet from its seat thus opening the valve and unloads the system to a low pressure. Acts as a circuit breaker in a hydraulic system.
This sequence cartridge valve offers a free reverse flow from port 2 to port 1.

FEATURES AND BENEFITS

Leakproof screw adjustment.
Pressure in tank port (3) will add to the bias spring setting, and is limited to 2000 PSI.
Adjustment screw can not be backed out of the valve.
Overset protection–pilot spring can not go solid.
Hardened precision fitted poppet & cage provides reliable, long life.
A unique self aligning (floating) cage provides very low hysteresis and reliable operation.
All external carbon steel parts are plated for longer life against the elements.
Valve is available with screw, tamperproof, capped and handknob adjustments.
All cartridge valves are 100% functionally tested.
Industry common cavity.

SPECIFICATIONS

OPERATING PRESSURE: 5,000 PSI [350 Bar]
PROOF PRESSURE: 10,000 PSI [700 Bar]
FLOW: 20.0 GPM [76 L/M] nominal. See performance chart.
INTERNAL LEAKAGE: 5 drops/min (.25 cc/m) @ 85% of crack pressure.
DEFINITION OF CRACK: evident at 0.06 GPM (0.25 LPM)
VALVE HOUSINGS: 2500 PSI [175 Bar] = Aluminum – Anodized.
5000 PSI [350 Bar] = Steel – Unplated.
OPERATING TEMPERATURE: –40° to +250° F. [–40° to +120° C.]
OPERATING MEDIA: All general purpose hydraulic fluids such as MIL–H–5606, SAE–#10, SAE–#20, etc.
INSTALLATION: No restriction.
FILTRATION: 25 microns or better.
SEAL KIT NUMBER: SKN–1028 for buna "N".
SKV–1028 for viton.
WEIGHT: 0.42 lb [.19 kg] cartridge only.
VALVE CAVITY: #C1025, See Page 0–022.0.

Phase-Out

info.el@bucherhydraulics.com www.bucherhydraulics.com/commoncavity

© 2015 by Bucher Hydraulics, Inc., 2545 Northwest Parkway, Elgin, Illinois 60124, USA
All rights reserved.
Data is provided for the purpose of product description only, and must not be construed as warranted characteristics in the legal sense. The information does not relieve users from the duty of conducting their own evaluations and tests. Because the products are subject to continual improvement, we reserve the right to amend the product specifications contained in this catalogue.

BUCHER hydraulics

PRESSURE BREAKER/SEQUENCE VALVE
PILOT OPERATED, SLIDING SPOOL

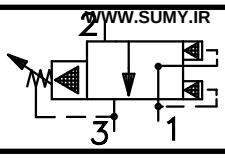

WWW.SUMY.IR

TORQUE:
Steel = 35/40 Ft–Lb. [47/54 Nm]
Aluminum = 25/30 Ft–Lb. [34/41 Nm]

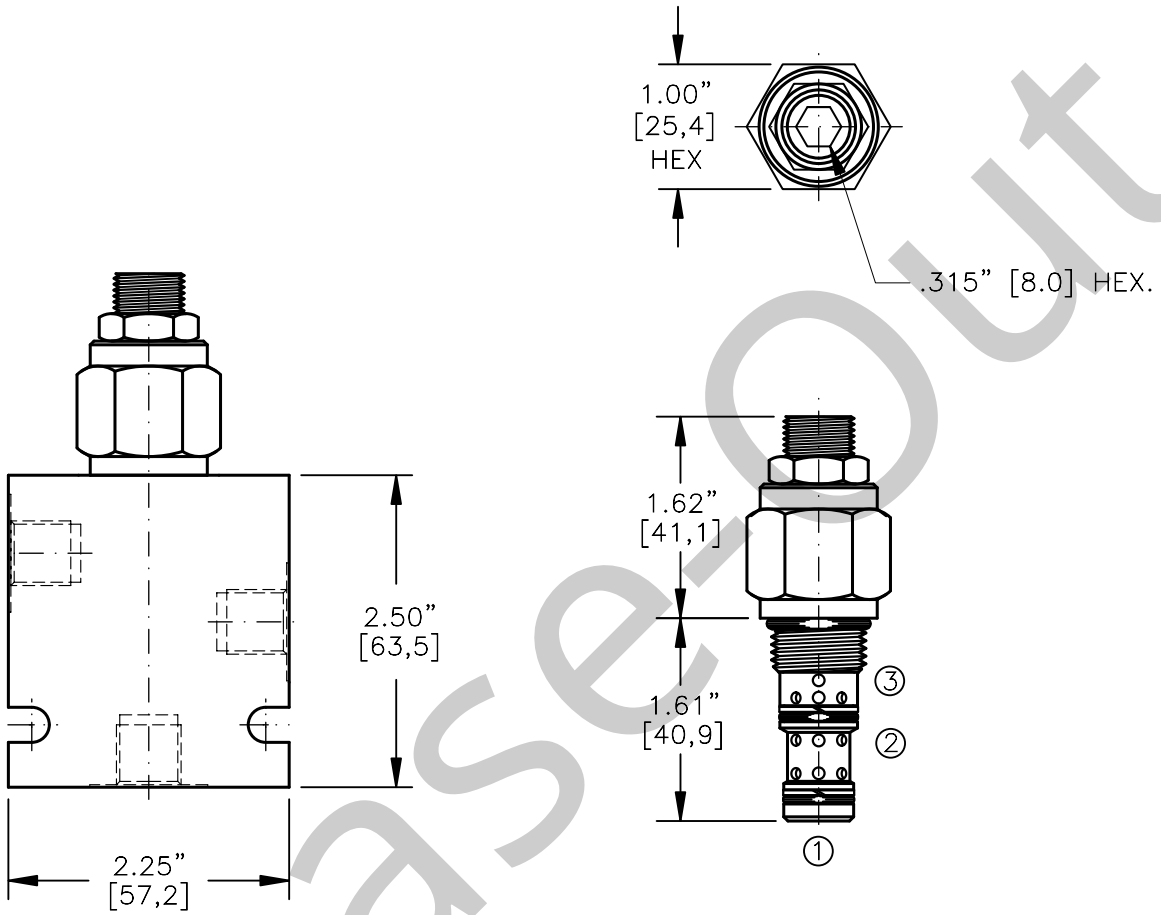

Phase-Out

FOR ALUMINUM OR STEEL VALVE HOUSING CONFIGURATIONS SEE PAGE 0–031.1

BSXS–08–X–X–X–XX

BASIC

SIZE
08 = 3/4"–16 UNF

SEALS
N = BUNA "N"
V = VITON

ADJUSTMENT
S = ADJUSTING SCREW
C = CAPPED
T = TAMPERPROOF
K = HANDKNOB
M = METAL HANDKNOB

PRESSURE RANGE
15 = 50 TO 1500 PSI
30 = 50 TO 3000 PSI
50 = 50 TO 5000 PSI

PORTS
0 = CARTRIDGE ONLY
02BX = G 1/4" BSPP
06TX = SAE – #6

"A" – ALUM. HOUSING
"S" – STEEL HOUSING

FOR ADJUSTMENT CONTROL OPTIONS SEE PAGE 0–050.0

CARTRIDGE ONLY

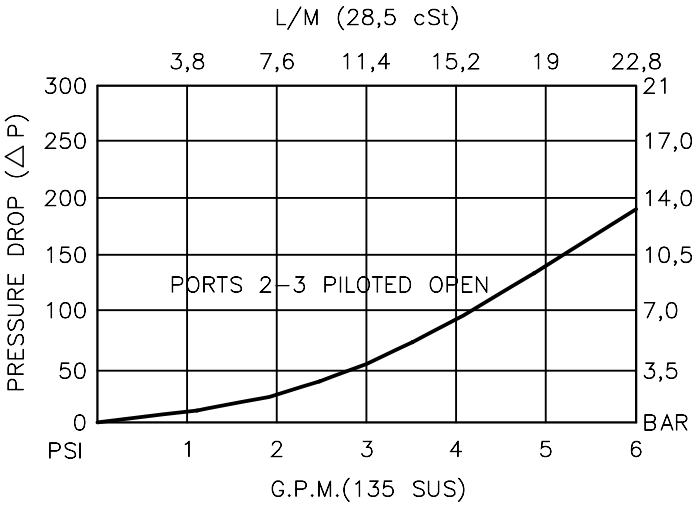

BUCHER hydraulics

WWW.SUMY.IR

PRESSURE BREAKER/SEQUENCE VALVE
PILOT OPERATED, SLIDING SPOOL

DESCRIPTION

This unit is a PILOT OPERATED, SCREW IN CARTRIDGE STYLE, SLIDING SPOOL TYPE, ADJUSTABLE, INTERNAL PILOT, HYDRAULIC PRESSURE BREAKER/SEQUENCE VALVE.

OPERATIONS

This is a normally closed breaker/sequence valve, blocking flow from port 2 to port 3. Port 1 is as external pilot port. When pressure in port 1 exceeds spring bias setting, the spool will shift and stay shifted allowing flow from port 2 to port 3, until pressure at port 1 is removed. acts like a circuit breaker in a hydraulic system.

FEATURES AND BENEFITS

Leakproof screw adjustment.
Pressure in tank port (3) will add to the bias spring setting, and is limited to 2000 PSI.
Adjustment screw can not be backed out of the valve.
Overset protection – pilot spring can not go solid.
Hardened precision fitted spool & cage provides reliable, long life.
A unique self aligning (floating) cage provides very low hysteresis and reliable operation.
All external carbon steel parts are plated for longer life against the elements.
Valve is available with screw, tamperproof, capped and handknob adjustments.
All cartridge valves are 100% functionally tested.
Industry common cavity.

SPECIFICATIONS

OPERATING PRESSURE: 5,000 PSI [350 Bar]
PROOF PRESSURE: 10,000 PSI [700 Bar]
FLOW: 6.0 GPM [23 L/M] nominal. See performance chart.
INTERNAL LEAKAGE: 5 cu.in./min [.82 cc/m] @ 85% of crack pressure.
DEFINITION OF CRACK: evident at 0.06 GPM [0.25 LPM]
VALVE HOUSINGS: 2500 PSI [175 Bar] = Aluminum – Anodized.
5000 PSI [350 Bar] = Steel – Unplated.
OPERATING TEMPERATURE: –40° to +250° F. [–40° to +120° C.]
OPERATING MEDIA: All general purpose hydraulic fluids such as MIL–H–5606, SAE–#10, SAE–#20, etc.
INSTALLATION: No restriction.
FILTRATION: 25 microns or better.
SEAL KIT NUMBER: SKN–0831 for buna "N".
SKV–0831 for viton.
WEIGHT: 0.30 lb [.14 kg] cartridge only.
VALVE CAVITY: #C0830, See Page 0–031.0.

Phase-Out

info.el@bucherhydraulics.com www.bucherhydraulics.com/commoncavity

© 2015 by Bucher Hydraulics, Inc., 2545 Northwest Parkway, Elgin, Illinois 60124, USA
All rights reserved.
Data is provided for the purpose of product description only, and must not be construed as warranted characteristics in the legal sense. The information does not relieve users from the duty of conducting their own evaluations and tests. Because the products are subject to continual improvement, we reserve the right to amend the product specifications contained in this catalogue.

BUCHER hydraulics

PRESSURE BREAKER/SEQUENCE VALVE
PILOT OPERATED, SLIDING SPOOL

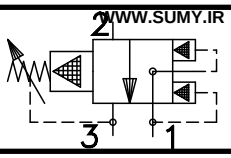

WWW.SUMY.IR

Pat.#5,546,980

TORQUE:
Steel = 55/60 Ft–Lb. [74/81 Nm]
Aluminum = 35/40 Ft–Lb. [47/54 Nm]

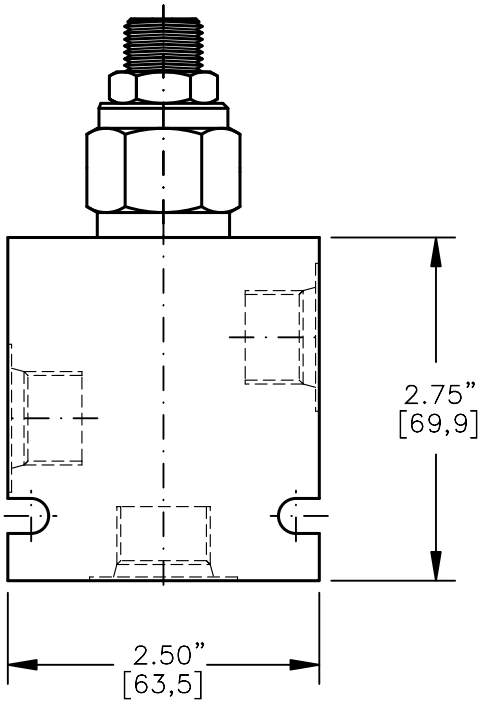

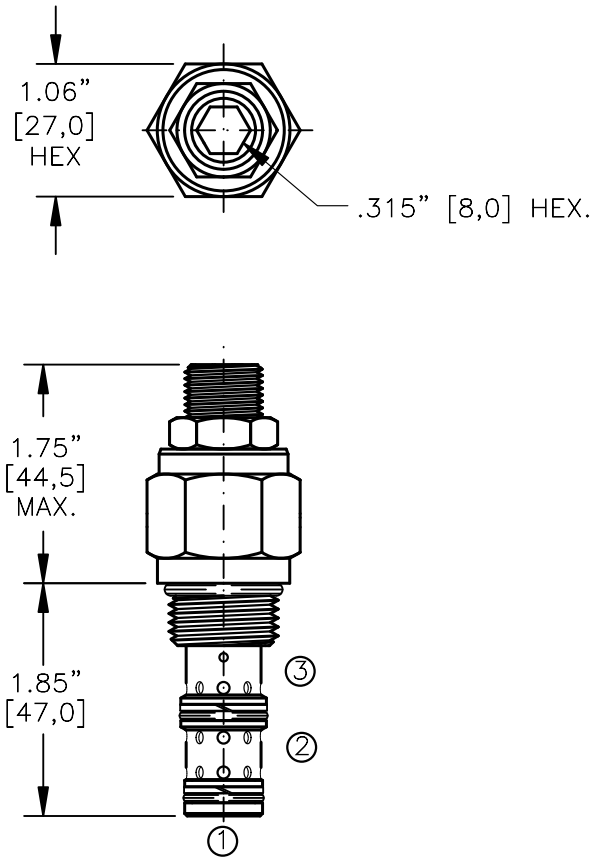

FOR ALUMINUM OR STEEL VALVE HOUSING CONFIGURATIONS SEE PAGE 0–032.1

BSXS–10–X–X–X–XX

BASIC

SIZE
10 = 7/8"–14 UNF

SEALS
N = BUNA "N"
V = VITON

ADJUSTMENT
S = ADJUSTING SCREW
C = CAPPED
T = TAMPERPROOF
K = HANDKNOB
M = METAL HANDKNOB

PRESSURE RANGE
15 = 50 TO 1500 PSI
30 = 50 TO 3000 PSI
50 = 50 TO 5000 PSI

PORTS
0 = CARTRIDGE ONLY
02BX = G 1/4" BSPP
03BX = G 3/8" BSPP
06TX = SAE – #6
08TX = SAE – #8

"A" – ALUM. HOUSING
"S" – STEEL HOUSING

FOR ADJUSTMENT CONTROL OPTIONS SEE PAGE 0–050.0

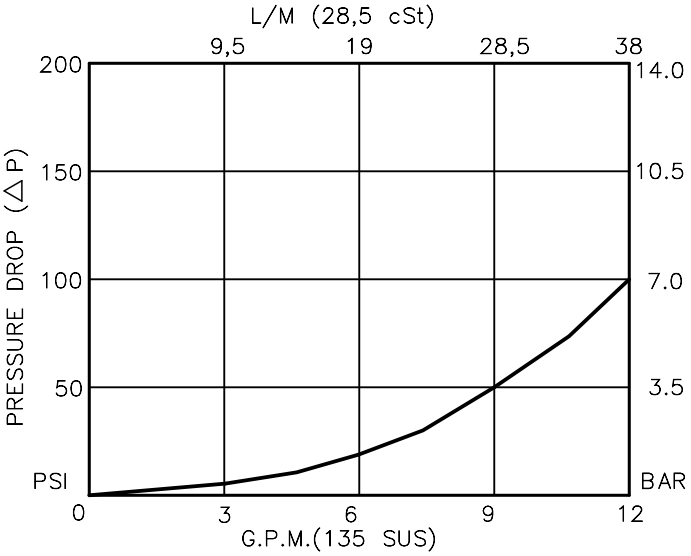

BUCHER hydraulics

WWW.SUMY.IR

PRESSURE BREAKER/SEQUENCE VALVE
PILOT OPERATED, SLIDING SPOOL

DESCRIPTION

This unit is a PILOT OPERATED, SCREW IN CARTRIDGE STYLE, SLIDING SPOOL TYPE, ADJUSTABLE, EXTERNAL PILOT, HYDRAULIC PRESSURE BREAKER/SEQUENCE VALVE.

OPERATIONS

This is a normally closed breaker/sequence valve, blocking flow port 2 to port 3. Port 1 is an external pilot port. When pressure in port 1 exceeds spring bias setting the spool will shift and stay shifted allowing flow from port 2 to port 3 until pressure at port 1 is removed. Acts like a circuit breaker in a hydraulic system.

FEATURES AND BENEFITS

Leakproof screw adjustment.
Pressure in tank port (3) will add to the bias spring setting, and is limited to 2000 PSI.
Adjustment screw can not be backed out of the valve.
Overset protection—pilot spring can not go solid.
Hardened precision fitted spool & cage provides reliable, long life.
A unique self aligning (floating) cage provides very low hysteresis and reliable operation.
All external carbon steel parts are plated for longer life against the elements.
Valve is available with screw, tamperproof, capped and handknob adjustments.
All cartridge valves are 100% functionally tested.
Industry common cavity.

SPECIFICATIONS

OPERATING PRESSURE: 5,000 PSI [350 Bar]
PROOF PRESSURE: 10,000 PSI [700 Bar]
FLOW: 12.0 GPM [46 L/M] nominal. See performance chart.
INTERNAL LEAKAGE: 5 cu.in./min [.82 cc/m] @ 85% of crack pressure.
DEFINITION OF CRACK: evident at 0.06 GPM [0.25 LPM]
VALVE HOUSINGS: 2500 PSI [175 Bar] = Aluminum — Anodized.
5000 PSI [350 Bar] = Steel — Unplated.
OPERATING TEMPERATURE: −40° to +250° F. [−40° to +120° C.]
OPERATING MEDIA: All general purpose hydraulic fluids such as MIL−H−5606, SAE−#10, SAE−#20, etc.
INSTALLATION: No restriction.
FILTRATION: 25 microns or better.
SEAL KIT NUMBER: SKN−1031 for buna "N".
SKV−1031 for viton.
WEIGHT: 0.42 lb [.19 kg] cartridge only.
VALVE CAVITY: #C1030, See Page 0−032.0.

info.el@bucherhydraulics.com www.bucherhydraulics.com/commoncavity

© 2015 by Bucher Hydraulics, Inc., 2545 Northwest Parkway, Elgin, Illinois 60124, USA
All rights reserved.
Data is provided for the purpose of product description only, and must not be construed as warranted characteristics in the legal sense. The information does not relieve users from the duty of conducting their own evaluations and tests. Because the products are subject to continual improvement, we reserve the right to amend the product specifications contained in this catalogue.

BUCHER hydraulics

PRESSURE BREAKER/SEQUENCE VALVE
PILOT OPERATED, SLIDING SPOOL

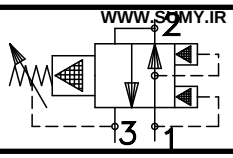

WWW.SOMY.IR

TORQUE:
Steel = 35/40 Ft–Lb. [47/54 Nm]
Aluminum = 25/30 Ft–Lb. [34/41 Nm]

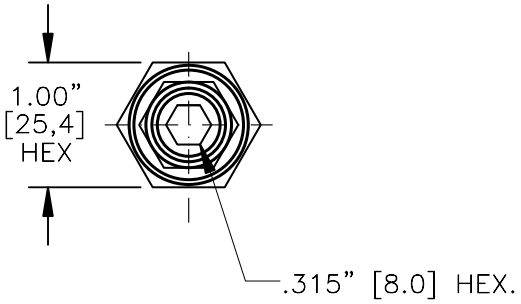

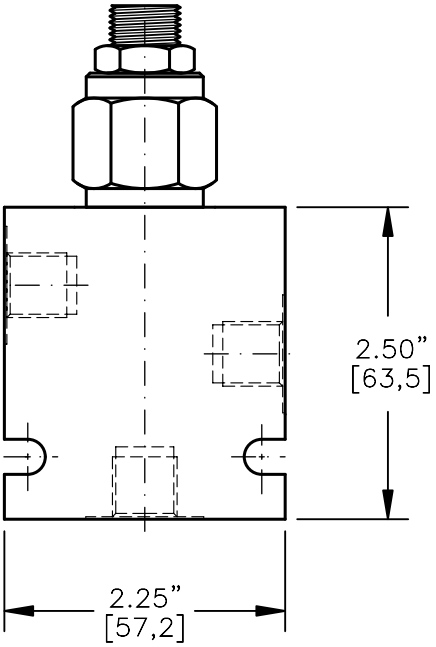

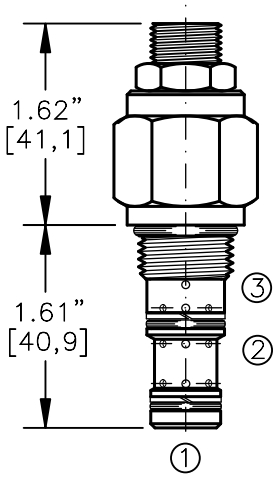

FOR ALUMINUM OR STEEL VALVE HOUSING CONFIGURATIONS SEE PAGE 0–031.1

BSOS–08–X–X–X–XX

BASIC

SIZE
08 = 3/4"–16 UNF

SEALS
N = BUNA "N"
V = VITON

ADJUSTMENT
S = ADJUSTING SCREW
C = CAPPED
T = TAMPERPROOF
K = HANDKNOB
M = METAL HANDKNOB

PRESSURE RANGE
15 = 100 TO 1500 PSI
30 = 300 TO 3000 PSI
50 = 500 TO 5000 PSI

PORTS
0 = CARTRIDGE ONLY
02BX = G 1/4" BSPP
06TX = SAE – #6
"A" – ALUM. HOUSING
"S" – STEEL HOUSING

FOR ADJUSTMENT CONTROL OPTIONS SEE PAGE 0–050.0

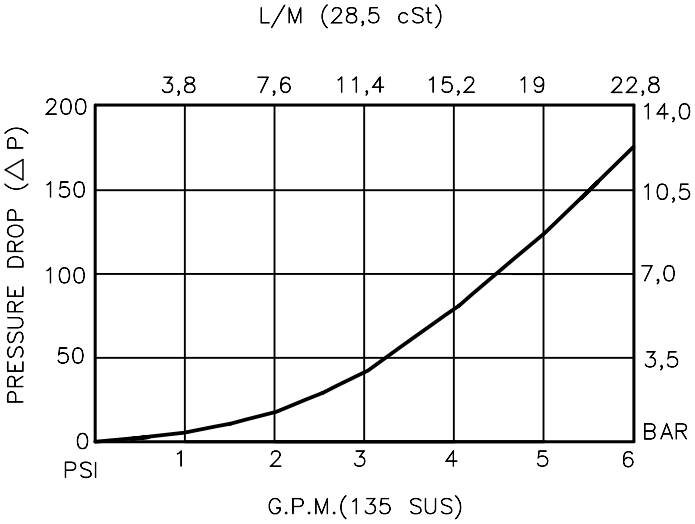

BUCHER hydraulics

WWW.SUMY.IR

PRESSURE BREAKER/SEQUENCE VALVE
PILOT OPERATED, SLIDING SPOOL

DESCRIPTION

This unit is a PILOT OPERATED, SCREW IN CARTRIDGE STYLE, SLIDING SPOOL TYPE, ADJUSTABLE, INTERNAL PILOT, HYDRAULIC PRESSURE BREAKER/SEQUENCE VALVE.

OPERATIONS

This is a normally open breaker/sequence valve, allowing flow from port 1 to port 2 and no flow from port 2 to port 3. When pressure in port 1 exceeds bias spring setting the spool will shift and stay shifted allowing no flow from port 1 to port 2 and pass flow from port 2 to port 3, until pressure at port 1 is removed. Acts like a circuit breaker in a hydraulic system.

FEATURES AND BENEFITS

Leakproof screw adjustment.
Pressure in tank port (3) will and to the bias spring setting, and is limited to 2000 PSI.
Adjustment screw can not be backed out of the valve.
Overset protection – pilot spring can not go solid.
Hardened precision fitted spool & cage provides reliable, long life.
A unique self aligning (floating) cage provides very low hysteresis and reliable operation.
All external carbon steel parts are plated for longer life against the elements.
Valve is available with screw, tamperproof, capped and handknob adjustments.
All cartridge valves are 100% functionally tested.
Industry common cavity.

SPECIFICATIONS

OPERATING PRESSURE: 5,000 PSI [350 Bar]
PROOF PRESSURE: 10,000 PSI [700 Bar]
FLOW: 6.0 GPM [23 L/M] nominal. See performance chart.
INTERNAL LEAKAGE: 5 cu.in./min [.82 cc/m] @ 85% of crack pressure.
DEFINITION OF CRACK: evident at 0.06 GPM [0.25 LPM]
VALVE HOUSINGS: 2500 PSI [175 Bar] = Aluminum – Anodized.
5000 PSI [350 Bar] = Steel – Unplated.
OPERATING TEMPERATURE: –40° to +250° F. [–40° to +120° C.]
OPERATING MEDIA: All general purpose hydraulic fluids such as MIL–H–5606, SAE–#10, SAE–#20, etc.
INSTALLATION: No restriction.
FILTRATION: 25 microns or better.
SEAL KIT NUMBER: SKN–0831 for buna "N".
SKV–0831 for viton.
WEIGHT: 0.30 lb [.14 kg] cartridge only.
VALVE CAVITY: #C0830, See Page 0–031.0.

info.el@bucherhydraulics.com www.bucherhydraulics.com/commoncavity

© 2015 by Bucher Hydraulics, Inc., 2545 Northwest Parkway, Elgin, Illinois 60124, USA
All rights reserved.
Data is provided for the purpose of product description only, and must not be construed as warranted characteristics in the legal sense. The information does not relieve users from the duty of conducting their own evaluations and tests. Because the products are subject to continual improvement, we reserve the right to amend the product specifications contained in this catalogue.

BUCHER hydraulics

PRESSURE BREAKER/SEQUENCE VALVE
PILOT OPERATED, SLIDING SPOOL

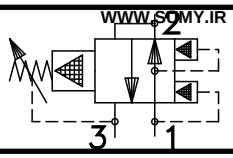

WWW.SOMY.IR

Pat.#5,546,980

TORQUE:
Steel = 55/60 Ft–Lb. [74/81 Nm]
Aluminum = 35/40 Ft–Lb. [47/54 Nm]

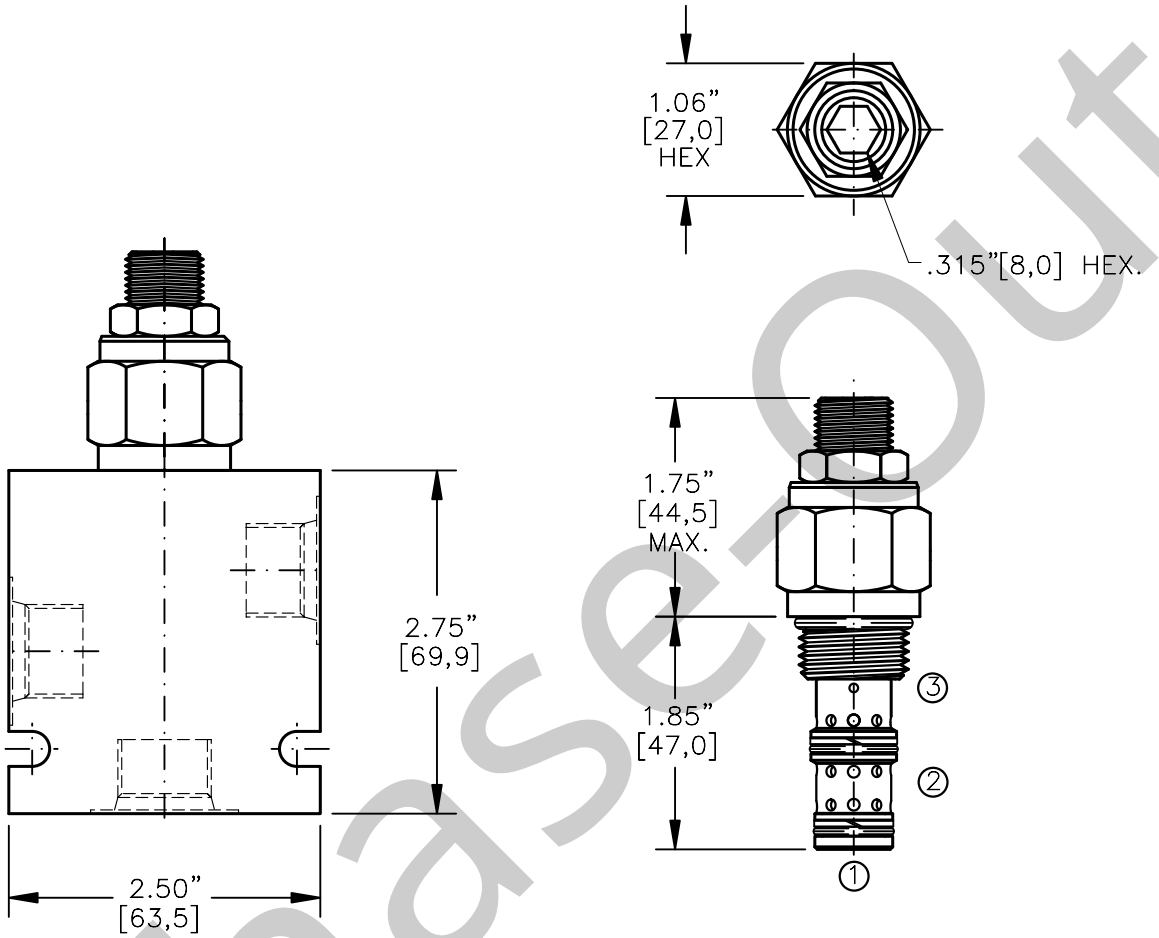

FOR ALUMINUM OR STEEL VALVE HOUSING CONFIGURATIONS SEE PAGE 0–032.1

BSOS–10–X–X–X–XX

BASIC

SIZE
10 = 7/8"–14 UNF

SEALS
N = BUNA "N"
V = VITON

ADJUSTMENT
S = ADJUSTING SCREW
C = CAPPED
T = TAMPERPROOF
K = HANDKNOB
M = METAL HANDKNOB

PRESSURE RANGE
15 = 50 TO 1500 PSI
30 = 50 TO 3000 PSI
50 = 50 TO 5000 PSI

PORTS
0 = CARTRIDGE ONLY
02BX = G 1/4" BSPP
03BX = G 3/8" BSPP
06TX = SAE – #6
08TX = SAE – #8

"A" – ALUM. HOUSING
"S" – STEEL HOUSING

FOR ADJUSTMENT CONTROL OPTIONS SEE PAGE 0–050.0

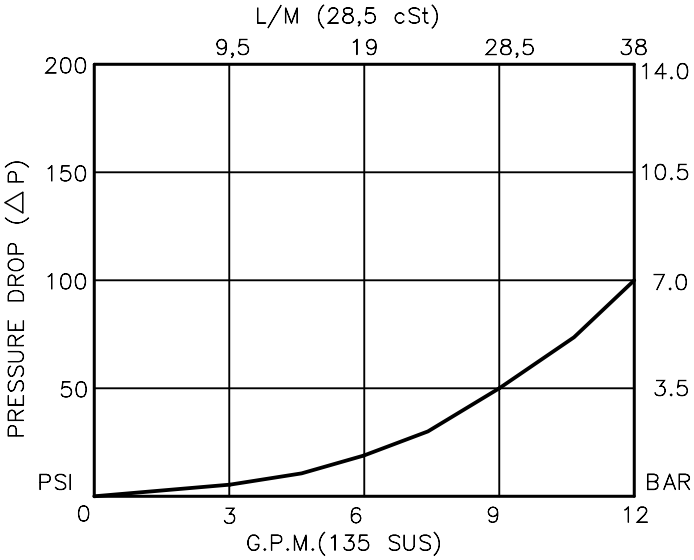

Phase-Out

BUCHER hydraulics

WWW.SUMY.IR

PRESSURE BREAKER/SEQUENCE VALVE
PILOT OPERATED, SLIDING SPOOL

DESCRIPTION

This unit is a PILOT OPERATED, SCREW IN CARTRIDGE STYLE, SLIDING SPOOL TYPE, ADJUSTABLE, INTERNAL PILOT, HYDRAULIC PRESSURE BREAKER/SEQUENCE VALVE.

OPERATIONS

This is a normally open breaker/sequence valve, allowing flow from port 1 to port 2 and no flow from port 2 to port 3. When pressure in port 1 exceeds bias spring setting the spool will shift and stay shifted allowing no flow from port 1 to port 2 and pass flow from port 2 to port 3, until pressure at port 1 is removed. Acts like a circuit breaker in a hydraulic system.

FEATURES AND BENEFITS

Leakproof screw adjustment.
Pressure in tank port (3) will add to the bias spring setting, and is limited to 2000 PSI.
Adjustment screw can not be backed out of the valve.
Overset protection – pilot spring can not go solid.
Hardened precision fitted spool & cage provides reliable, long life.
A unique self aligning (floating) cage provides very low hysteresis and reliable operation.
All external carbon steel parts are plated for longer life against the elements.
Valve is available with screw, tamperproof, capped and handknob adjustments.
All cartridge valves are 100% functionally tested.
Industry common cavity.

SPECIFICATIONS

OPERATING PRESSURE: 5,000 PSI [350 Bar]
PROOF PRESSURE: 10,000 PSI [700 Bar]
FLOW: 12.0 GPM [46 L/M] nominal. See performance chart.
INTERNAL LEAKAGE: 5 cu.in./min [.82 cc/m] @ 85% of crack pressure.
DEFINITION OF CRACK: evident at 0.06 GPM [0.25 LPM]
VALVE HOUSINGS: 2500 PSI [175 Bar] = Aluminum – Anodized.
5000 PSI [350 Bar] = Steel – Unplated.
OPERATING TEMPERATURE: –40° to +250° F. [–40° to +120° C.]
OPERATING MEDIA: All general purpose hydraulic fluids such as MIL–H–5606, SAE–#10, SAE–#20, etc.
INSTALLATION: No restriction.
FILTRATION: 25 microns or better.
SEAL KIT NUMBER: SKN–1031 for buna "N".
SKV–1031 for viton.
WEIGHT: 0.42 lb [.19 kg] cartridge only.
VALVE CAVITY: #C1030, See Page 0–032.0.

Phase-Out

info.el@bucherhydraulics.com www.bucherhydraulics.com/commoncavity

© 2015 by Bucher Hydraulics, Inc., 2545 Northwest Parkway, Elgin, Illinois 60124, USA
All rights reserved.
Data is provided for the purpose of product description only, and must not be construed as warranted characteristics in the legal sense. The information does not relieve users from the duty of conducting their own evaluations and tests. Because the products are subject to continual improvement, we reserve the right to amend the product specifications contained in this catalogue.

BUCHER hydraulics

PRESSURE BREAKER/SEQUENCE VALVE
PILOT OPERATED, SLIDING SPOOL

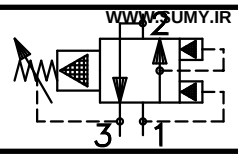

WWW.SUMY.IR

TORQUE:
Steel = 35/40 Ft–Lb. [47/54 Nm]
Aluminum = 25/30 Ft–Lb. [34/41 Nm]

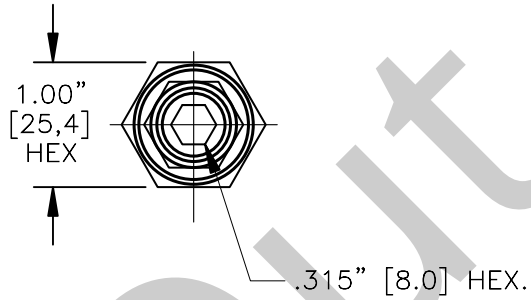

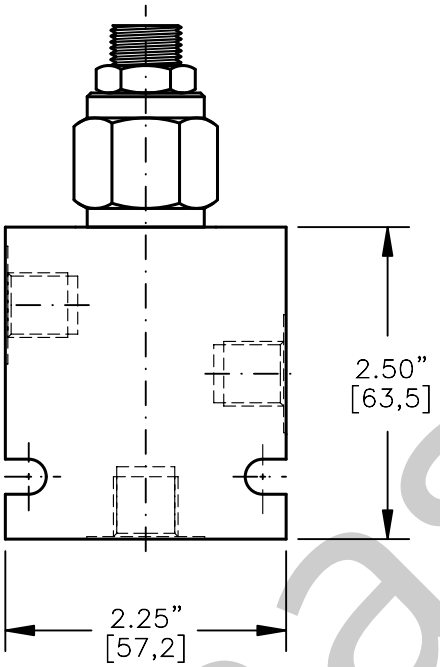

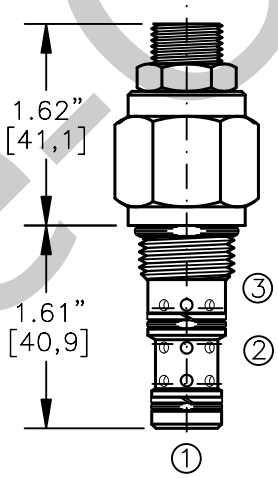

FOR ALUMINUM OR STEEL VALVE HOUSING CONFIGURATIONS SEE PAGE 0–031.1

BSCS–08–X–X–X–XX

BASIC

SIZE
08 = 3/4"–16 UNF

SEALS
N = BUNA "N"
V = VITON

ADJUSTMENT
S = ADJUSTING SCREW
C = CAPPED
T = TAMPERPROOF
K = HANDKNOB
M = METAL HANDKNOB

PRESSURE RANGE
15 = 50 TO 1500 PSI
30 = 50 TO 3000 PSI
50 = 50 TO 5000 PSI

PORTS
0 = CARTRIDGE ONLY
02BX = G 1/4" BSPP
06TX = SAE – #6

"A" – ALUM. HOUSING
"S" – STEEL HOUSING

FOR ADJUSTMENT CONTROL OPTIONS SEE PAGE 0–050.0

CARTRIDGE ONLY

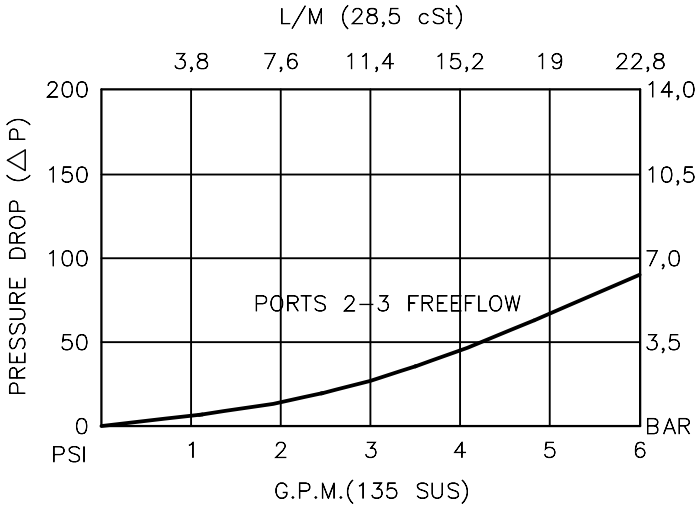

Phase-Out

BUCHER hydraulics

WWW.SUMY.IR

PRESSURE BREAKER/SEQUENCE VALVE
PILOT OPERATED, SLIDING SPOOL

DESCRIPTION

This unit is a PILOT OPERATED, SCREW IN CARTRIDGE STYLE, SLIDING SPOOL TYPE, ADJUSTABLE, INTERNAL PILOT, HYDRAULIC PRESSURE BREAKER/SEQUENCE VALVE.

OPERATIONS

This is a normally closed breaker/sequence valve, blocking flow from port 1 to port 2. When pressure in port 1 exceeds bias spring setting the spool will shift and stay shifted allowing flow from port 1 to port 2 and blocking flow from port 2 to port 3, until pressure at port 1 is removed. Acts like a circuit breaker in a hydraulic system.

FEATURES AND BENEFITS

Leakproof screw adjustment.
Pressure in tank port (3) will add to the bias spring setting, and is limited to 2000 PSI.
Adjustment screw can not be backed out of the valve.
Overset protection–pilot spring can not go solid.
Hardened precision fitted spool & cage provides reliable, long life.
A unique self aligning (floating) cage provides very low hysteresis and reliable operation.
All external carbon steel parts are plated for longer life against the elements.
Valve is available with screw, tamperproof, capped and handknob adjustments.
All cartridge valves are 100% functionally tested.
Industry common cavity.

SPECIFICATIONS

OPERATING PRESSURE: 5,000 PSI [350 Bar]
PROOF PRESSURE: 10,000 PSI [700 Bar]
FLOW: 6.0 GPM [23,0 L/M] nominal. See performance chart.
INTERNAL LEAKAGE: 5 cu.in./min [.82 cc/m] @ 85% of crack pressure.
DEFINITION OF CRACK: evident at 0.06 GPM [0.25 LPM]
VALVE HOUSINGS: 2500 PSI [175 Bar] = Aluminum – Anodized.
5000 PSI [350 Bar] = Steel – Unplated.
OPERATING TEMPERATURE: –40° to +250° F. [–40° to +120° C.]
OPERATING MEDIA: All general purpose hydraulic fluids such as MIL–H–5606, SAE–#10, SAE–#20, etc.
INSTALLATION: No restriction.
FILTRATION: 25 microns or better.
SEAL KIT NUMBER: SKN–0831 for buna "N".
SKV–0831 for viton.
WEIGHT: 0.30 lb [.14 kg] cartridge only.
VALVE CAVITY: #C0830, See Page 0–031.0.

info.el@bucherhydraulics.com www.bucherhydraulics.com/commoncavity

© 2015 by Bucher Hydraulics, Inc., 2545 Northwest Parkway, Elgin, Illinois 60124, USA
All rights reserved.
Data is provided for the purpose of product description only, and must not be construed as warranted characteristics in the legal sense. The information does not relieve users from the duty of conducting their own evaluations and tests. Because the products are subject to continual improvement, we reserve the right to amend the product specifications contained in this catalogue.

Phase-Out

BUCHER hydraulics

PRESSURE BREAKER/SEQUENCE VALVE
PILOT OPERATED, SLIDING SPOOL

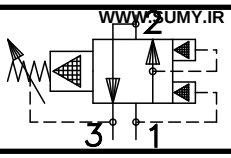

WWW.SUMY.IR

Pat.#5,546,980

TORQUE:
Steel = 55/60 Ft–Lb. [74/81 Nm]
Aluminum = 35/40 Ft–Lb. [47/54 Nm]

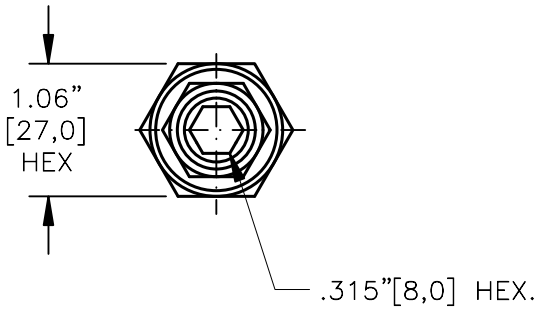

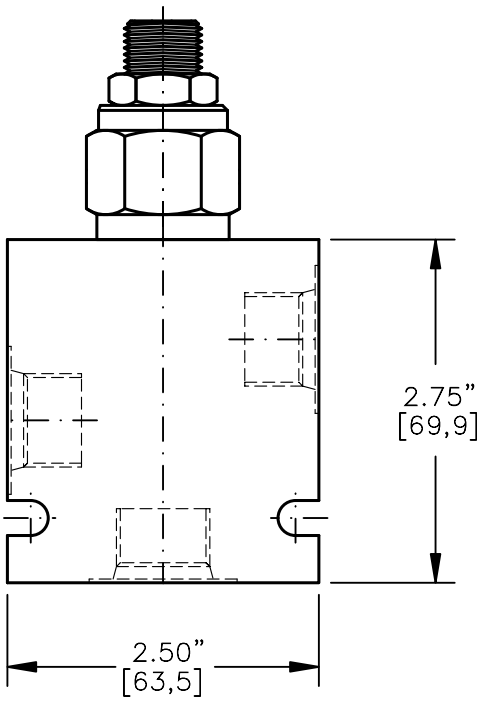

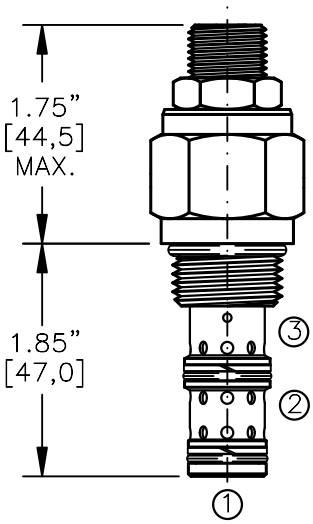

FOR ALUMINUM OR STEEL VALVE HOUSING CONFIGURATIONS SEE PAGE 0–032.1

BSCS–10–X–X–X–XX

BASIC

SIZE
10 = 7/8"–14 UNF

SEALS
N = BUNA "N"
V = VITON

ADJUSTMENT
S = ADJUSTING SCREW
C = CAPPED
T = TAMPERPROOF
K = HANDKNOB
M = METAL HANDKNOB

PRESSURE RANGE
15 = 50 TO 1500 PSI
30 = 50 TO 3000 PSI
50 = 50 TO 5000 PSI

PORTS
0 = CARTRIDGE ONLY
02BX = G 1/4" BSPP
03BX = G 3/8" BSPP
06TX = SAE – #6
08TX = SAE – #8

"A" – ALUM. HOUSING
"S" – STEEL HOUSING

FOR ADJUSTMENT CONTROL OPTIONS SEE PAGE 0–050.0

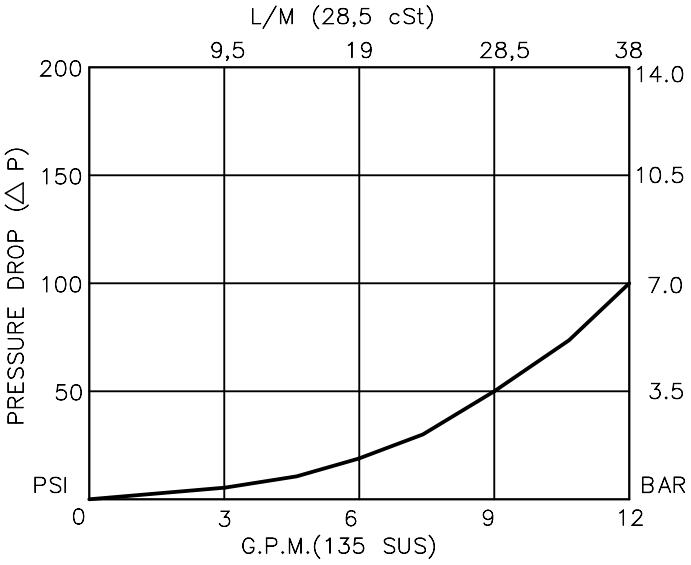

BUCHER hydraulics

WWW.SUMY.IR

PRESSURE BREAKER/SEQUENCE VALVE
PILOT OPERATED, SLIDING SPOOL

DESCRIPTION

This unit is a PILOT OPERATED, SCREW IN CARTRIDGE STYLE, SLIDING SPOOL TYPE, ADJUSTABLE, INTERNAL PILOT, HYDRAULIC PRESSURE BREAKER/SEQUENCE VALVE.

OPERATIONS

This is a normally closed breaker/sequence valve, blocking flow from port 1 to port 2. When pressure in port 1 exceeds bias spring setting the spool will shift and stay shifted allowing flow from port 1 to port 2 and blocking flow from port 2 to port 3, until pressure at port 1 is removed. Acts like a circuit breaker in a hydraulic system.

FEATURES AND BENEFITS

Leakproof screw adjustment.
Tank port (3) will add to the bias spring setting.
and is limited to 2000 PSI.
Adjustment screw can not be backed out of the valve.
Overset protection–pilot spring can not go solid.
Hardened precision fitted spool & cage provides reliable, long life.
A unique self aligning (floating) cage provides very low hysteresis and reliable operation.
All external carbon steel parts are plated for longer life against the elements.
Valve is available with screw, tamperproof, capped and handknob adjustments.
All cartridge valves are 100% functionally tested.
Industry common cavity.

SPECIFICATIONS

OPERATING PRESSURE: 5,000 PSI [350 Bar]
PROOF PRESSURE: 10,000 PSI [700 Bar]
FLOW: 12.0 GPM [46 L/M] nominal. See performance chart.
INTERNAL LEAKAGE: 5 cu.in./min [.82 cc/m] @ 85% of crack pressure.
DEFINITION OF CRACK: evident at 0.06 GPM [0.25 LPM]
VALVE HOUSINGS: 2500 PSI [175 Bar] = Aluminum – Anodized.
5000 PSI [350 Bar] = Steel – Unplated.
OPERATING TEMPERATURE: –40° to +250° F. [–40° to +120° C.]
OPERATING MEDIA: All general purpose hydraulic fluids such as MIL–H–5606, SAE–#10, SAE–#20, etc.
INSTALLATION: No restriction.
FILTRATION: 25 microns or better.
SEAL KIT NUMBER: SKN–1031 for buna "N".
SKV–1031 for viton.
WEIGHT: 0.42 lb [.19 kg] cartridge only.
VALVE CAVITY: #C1030, See Page 0–032.0.

info.el@bucherhydraulics.com www.bucherhydraulics.com/commoncavity

© 2015 by Bucher Hydraulics, Inc., 2545 Northwest Parkway, Elgin, Illinois 60124, USA
All rights reserved.
Data is provided for the purpose of product description only, and must not be construed as warranted characteristics in the legal sense. The information does not relieve users from the duty of conducting their own evaluations and tests. Because the products are subject to continual improvement, we reserve the right to amend the product specifications contained in this catalogue.

BUCHER hydraulics

LOGIC CONTROL ELEMENT
SPOOL TYPE, PILOT TO CLOSE, SPOOL "A"

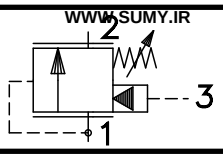

WWW.SUMY.IR

TORQUE:
Steel = 35/40 Ft–Lb. [47/54 Nm]
Aluminum = 25/30 Ft–Lb. [34/41 Nm]

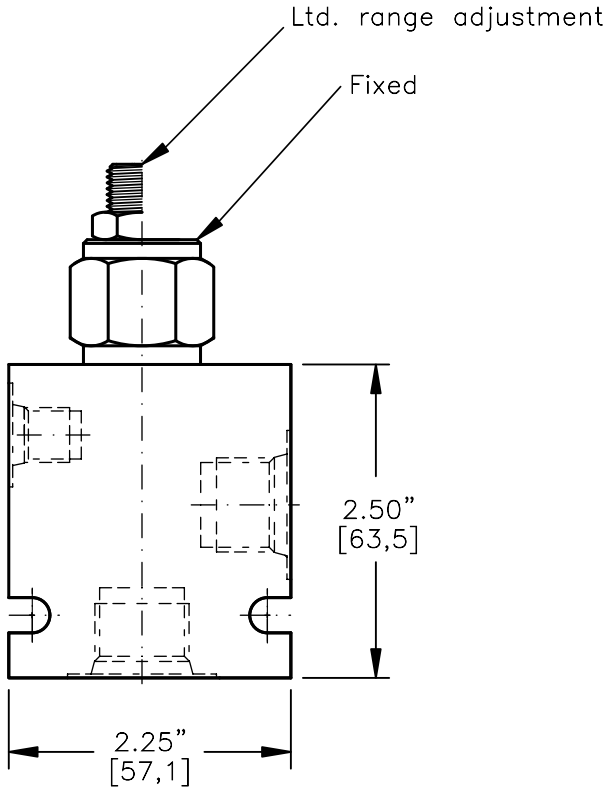

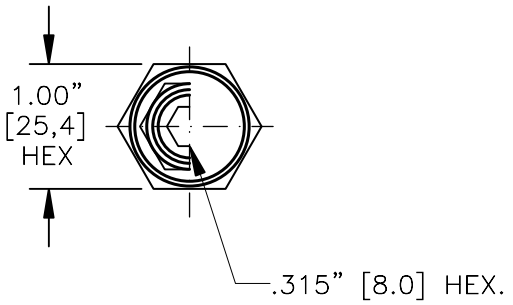

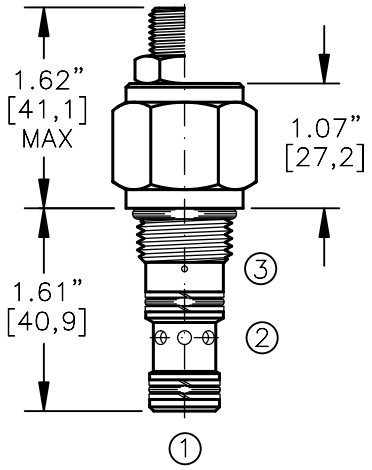

FOR ALUMINUM OR STEEL VALVE HOUSING CONFIGURATIONS SEE PAGE 0–021.1

LCEF–08–X–A–X–X–XXX

BASIC

SIZE
08 = 3/4"–16 UNF

SEALS
N = BUNA "N"
V = VITON

SPOOL
"A"=SPOOL (PILOT TO CLOSE)

ADJUSTMENT
F = FIXED (FACTORY SET)
S = ADJUSTING SCREW
C = CAPPED
T = TAMPERPROOF
K = HANDKNOB
M = METAL HANDKNOB

FOR ADJUSTMENT CONTROL OPTIONS SEE PAGE 0–050.0

PRESSURE BIAS SPRING
070 = 70 PSI (FIXED)
100 = 100 PSI (FIXED)
160 = 40–160 PSI (ADJ)

PORTS
0 = CARTRIDGE ONLY
03BX = G 3/8" BSPP
08TX = SAE – #8

"A" – ALUM. HOUSING
"S" – STEEL HOUSING

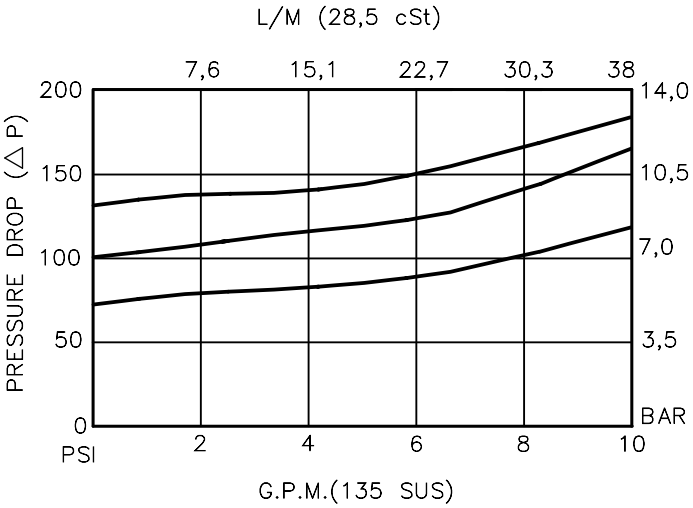

BUCHER hydraulics

WWW.SUMY.IR

LOGIC CONTROL ELEMENT
SPOOL TYPE, PILOT TO CLOSE, SPOOL "A"

DESCRIPTION

This unit is a DIRECT ACTING, SCREW IN CARTRIDGE STYLE, SPOOL TYPE, HYDRAULIC DIRECTIONAL LOGIC ELEMENT, with multi-functional potential when used with other directional pressure or flow control devices.

OPERATIONS

This valve blocks flow from port 1 to port 2 with a spring bias. It will shift to allow full flow from port 1 to port 2 only when the pressure in port 1 exceeds the cumulative pressure of port 3 plus the bias spring force value.
When no pressure is present at port 3, it will allow flow from port 1 to port 2 once the bias spring force is overcome by the pressure in port 1. This is pilot to close directional logic element.

FEATURES AND BENEFITS

Leakproof screw adjustment.
This valve has a fixed or an adjustable bias spring.
Adjustment screw can not be backed out of the valve.
Overset protection – spring can not go solid.
Hardened precision fitted spool & cage provides reliable, long life.
A unibody cage construction provides very low hysteresis and reliable operation.
All external carbon steel parts are plated for longer life against the elements.
Valve is available with fixed, screw, tamperproof, capped and handknob adjustments.
All cartridge valves are 100% functionally tested.
Industry common cavity.

BUCHER hydraulics

WWW.SUMY.IR

LOGIC CONTROL ELEMENT
SPOOL TYPE, PILOT TO CLOSE, SPOOL "A"

SPECIFICATIONS

OPERATING PRESSURE: 5,000 PSI [350 Bar]
PROOF PRESSURE: 10,000 PSI [700 Bar]
FLOW: 10.0 GPM [38 L/M] nominal. See performance chart.
INTERNAL LEAKAGE: 5 cu.in./min. [85 cc/m] @ 85% of crack pressure.
DEFINITION OF CRACK: evident at 0.06 GPM [0.25 LPM]
VALVE HOUSINGS: 2500 PSI [175 Bar] = Aluminum – Anodized.
5000 PSI [350 Bar] = Steel – Unplated.
OPERATING TEMPERATURE: –40° to +250° F. [–40° to +120° C.]
OPERATING MEDIA: All general purpose hydraulic fluids such as MIL–H–5606, SAE–#10, SAE–#20, etc.
INSTALLATION: No restriction.
FILTRATION: 25 microns or better.
SEAL KIT NUMBER: SKN–0827 for buna "N".
SKV–0827 for viton.
WEIGHT: 0.28 lb [.13 kg] cartridge only.
VALVE CAVITY: #C0825, See Page 0–021.0.

info.el@bucherhydraulics.com www.bucherhydraulics.com/commoncavity

© 2015 by Bucher Hydraulics, Inc., 2545 Northwest Parkway, Elgin, Illinois 60124, USA
All rights reserved.
Data is provided for the purpose of product description only, and must not be construed as warranted characteristics in the legal sense. The information does not relieve users from the duty of conducting their own evaluations and tests. Because the products are subject to continual improvement, we reserve the right to amend the product specifications contained in this catalogue.

BUCHER hydraulics

LOGIC CONTROL ELEMENT
SPOOL TYPE, PILOT TO CLOSE, SPOOL "A".

WWW.SUMY.IR

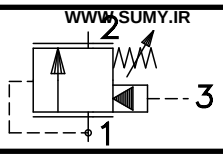

TORQUE:
Steel = 55/60 Ft–Lb. [74/81 Nm]
Aluminum = 35/40 Ft–Lb. [47/54 Nm]

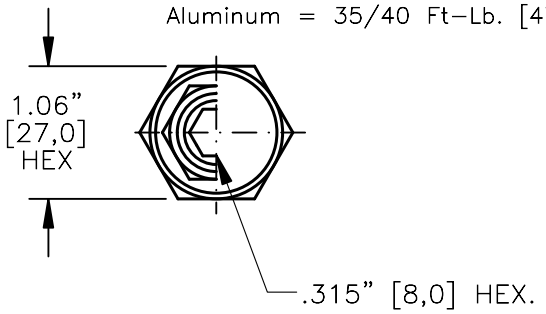

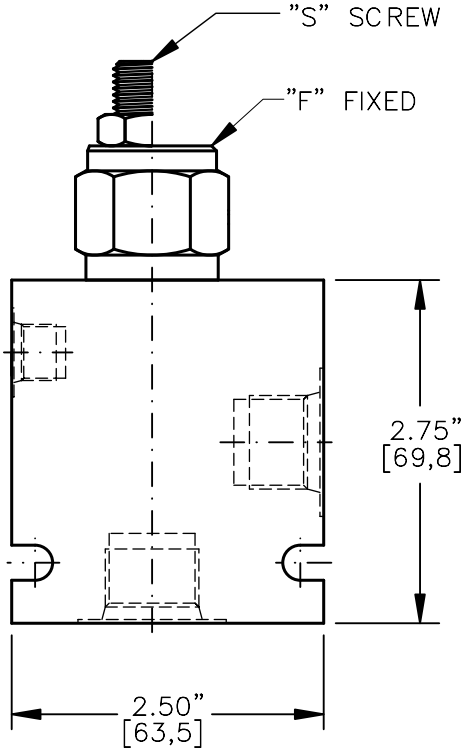

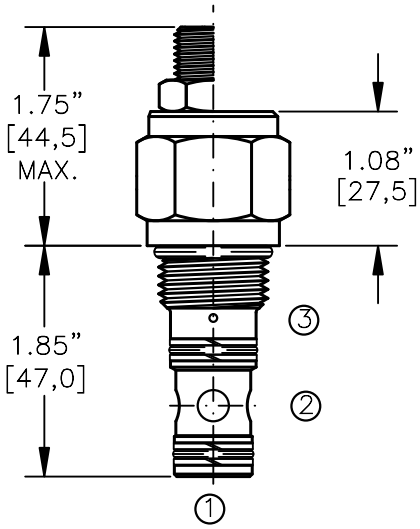

FOR ALUMINUM OR STEEL VALVE HOUSING CONFIGURATIONS SEE PAGE 0–022.1

LCEF–10–X–A–X–X–XXX

BASIC

SIZE
10 = 7/8"–14 UNF

SEALS
N = BUNA "N"
V = VITON

SPOOL
"A"=SPOOL (PILOT TO CLOSE)

ADJUSTMENT
F = FIXED (FACTORY SET)
S = ADJUSTING SCREW
C = CAPPED
T = TAMPERPROOF
K = HANDKNOB
M = METAL HANDKNOB

FOR ADJUSTMENT CONTROL OPTIONS SEE PAGE 0–050.0

PRESSURE BIAS SPRING
070 = 70 PSI (FIXED)
100 = 100 PSI (FIXED)
160 = 40–160 PSI (ADJ)

PORTS
0 = CARTRIDGE ONLY
03BX = G 3/8" BSPP
04BX = G 1/2" BSPP
08TX = SAE – #8
10TX = SAE – #10

"A" – ALUM. HOUSING
"S" – STEEL HOUSING

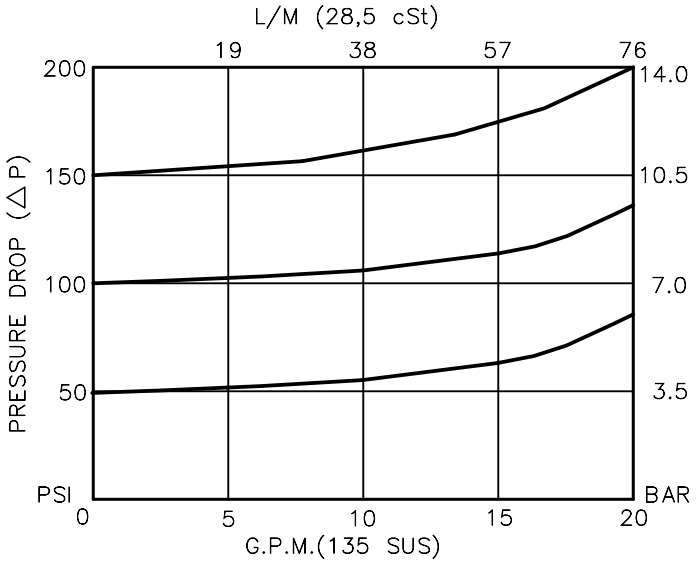

BUCHER hydraulics

WWW.SUMY.IR

LOGIC CONTROL ELEMENT
SPOOL TYPE, PILOT TO CLOSE, SPOOL "A".

DESCRIPTION

This unit is a DIRECT ACTING, SCREW IN CARTRIDGE STYLE, SPOOL TYPE, HYDRAULIC DIRECTIONAL LOGIC ELEMENT, with multi-functional potential when used with other directional, pressure or flow control devices.

OPERATIONS

This valve blocks flow from port 1 to port 2 with a spring bias. It will shift to allow full flow from port 1 to port 2 only when the pressure in port 1 exceeds the cumulative pressure of port 3 plus the bias spring force value.
When no pressure is present at port 3, it will allow flow from port 1 to port 2 once the bias spring force is overcome by the pressure in port 1. This is pilot to close directional logic element.

FEATURES AND BENEFITS

Leakproof screw adjustment.
This valve has a fixed or an adjustable bias spring.
Adjustment screw can not be backed out of the valve.
Overset protection – spring can not go solid.
Hardened precision fitted spool & cage provides reliable, long life.
A unibody cage construction provides very low hysteresis and reliable operation.
All external carbon steel parts are plated for longer life against the elements.
Valve is available with fixed, screw, tamperproof, capped and handknob adjustments.
All cartridge valves are 100% functionally tested.
Industry common cavity.

BUCHER hydraulics

WWW.SUMY.IR

LOGIC CONTROL ELEMENT
SPOOL TYPE, PILOT TO CLOSE, SPOOL "A".

SPECIFICATIONS

OPERATING PRESSURE: 5,000 PSI [350 Bar]
PROOF PRESSURE: 10,000 PSI [700 Bar]
FLOW: 20.0 GPM [76 L/M] nominal. See performance chart.
INTERNAL LEAKAGE: 5 cu.in./min. [85 cc/m] @ 85% of crack pressure.
DEFINITION OF CRACK: evident at 0.06 GPM [0.25 LPM]
VALVE HOUSINGS: 2500 PSI [175 Bar] = Aluminum – Anodized.
5000 PSI [350 Bar] = Steel – Unplated.
OPERATING TEMPERATURE: –40° to +250° F. [–40° to +120° C.]
OPERATING MEDIA: All general purpose hydraulic fluids such as MIL–H–5606, SAE–#10, SAE–#20, etc.
INSTALLATION: No restriction.
FILTRATION: 25 microns or better.
SEAL KIT NUMBER: SKN–1027 for buna "N".
SKV–1027 for viton.
WEIGHT: 0.46 lb [.21 kg] cartridge only.
VALVE CAVITY: #C1025, See Page 0–022.0.

info.el@bucherhydraulics.com

www.bucherhydraulics.com/commoncavity

© 2015 by Bucher Hydraulics, Inc., 2545 Northwest Parkway, Elgin, Illinois 60124, USA
All rights reserved.
Data is provided for the purpose of product description only, and must not be construed as warranted characteristics in the legal sense. The information does not relieve users from the duty of conducting their own evaluations and tests. Because the products are subject to continual improvement, we reserve the right to amend the product specifications contained in this catalogue.

BUCHER hydraulics

LOGIC CONTROL ELEMENT
SPOOL TYPE, PILOT TO CLOSE, SPOOL "A".

WWW.SUMY.IR

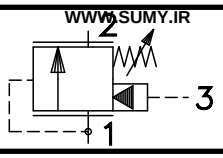

TORQUE:
Steel = 70/75 Ft–Lb. [95/102 Nm]
Aluminum = 55/60 Ft–Lb. [74/81 Nm]

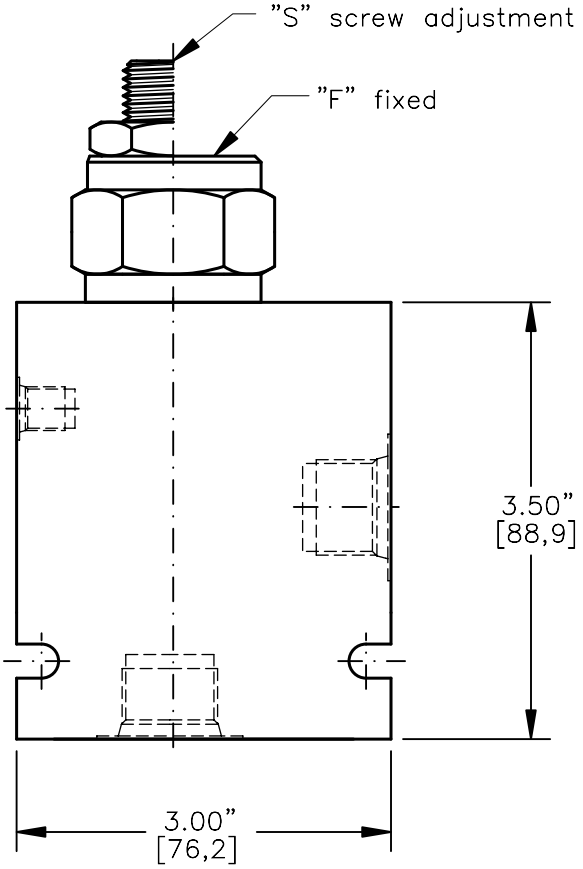

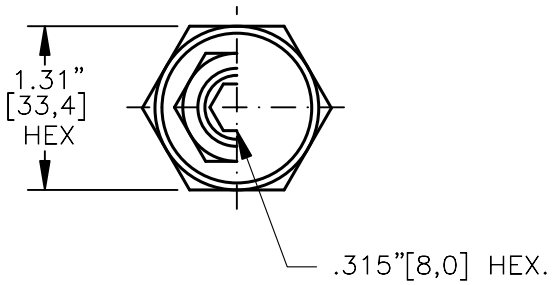

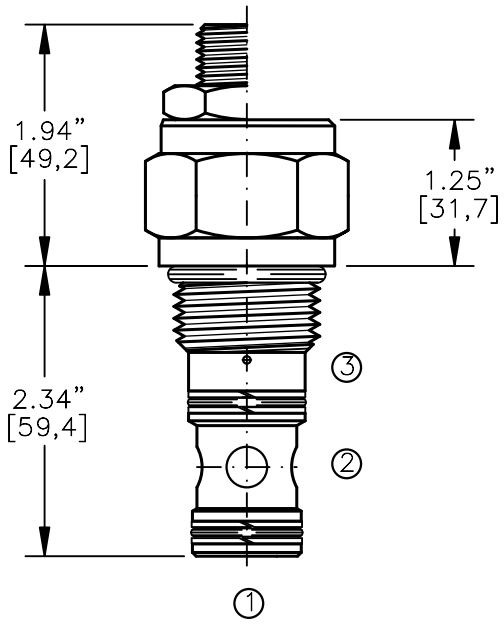

FOR ALUMINUM OR STEEL VALVE HOUSING CONFIGURATIONS SEE PAGE 0–023–1.

LCEF–12–X–A–X–X–XXX

BASIC

SIZE
12 = 1.062"–12 UNF

SEALS
N = BUNA "N"
V = VITON

SPOOL
"A"=SPOOL (PILOT TO CLOSE)

ADJUSTMENT
F = FIXED (FACTORY SET)
S = ADJUSTING SCREW
C = CAPPED
T = TAMPERPROOF

PRESSURE BIAS SPRING
070 = 70 PSI (FIXED)
100 = 100 PSI (FIXED)
160 = 40–160 PSI (ADJ)

PORTS
0 = CARTRIDGE ONLY
04BX = G 1/2" BSPP
06BX = G 3/4" BSPP
10TX = SAE – #10
12TX = SAE – #12

"A" – ALUM. HOUSING
"S" – STEEL HOUSING

FOR ADJUSTMENT CONTROL OPTIONS SEE PAGE 0–050.0

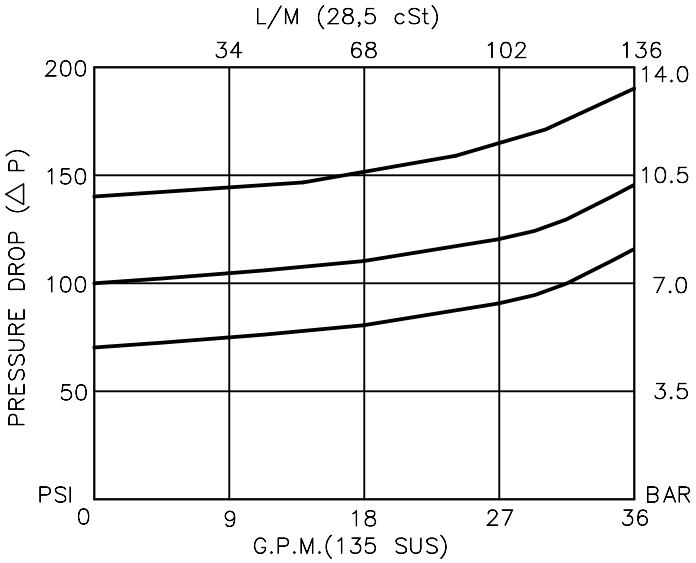

BUCHER hydraulics

WWW.SUMY.IR

LOGIC CONTROL ELEMENT
SPOOL TYPE, PILOT TO CLOSE, SPOOL "A".

DESCRIPTION

This unit is a DIRECT ACTING, SCREW IN CARTRIDGE STYLE, SPOOL TYPE, HYDRAULIC DIRECTIONAL LOGIC ELEMENT, with multi-functional potential when used with other directional, pressure or flow control devices.

OPERATIONS

This valve blocks flow from port 1 to port 2 with a spring bias. It will shift to allow full flow from port 1 to port 2 only when the pressure in port 1 exceeds the cumulative pressure of port 3 plus the bias spring force value.
When no pressure is present at port 3, it will allow flow from port 1 to port 2 once the bias spring force is overcome by the pressure in port 1. This is pilot to close directional logic element.

FEATURES AND BENEFITS

Leakproof screw adjustment.
This valve has a fixed or an adjustable bias spring.
Adjustment screw can not be backed out of the valve.
Overset protection – spring can not go solid.
Hardened precision fitted spool & cage provides reliable, long life.
A unibody cage construction provides very low hysteresis and reliable operation.
All external carbon steel parts are plated for longer life against the elements.
Valve is available with fixed, screw, tamperproof and capped adjustments.
All cartridge valves are 100% functionally tested.

BUCHER hydraulics

WWW.SUMY.IR

LOGIC CONTROL ELEMENT
SPOOL TYPE, PILOT TO CLOSE, SPOOL "A".

SPECIFICATIONS

OPERATING PRESSURE: 5,000 PSI [350 Bar]
PROOF PRESSURE: 10,000 PSI [700 Bar]
FLOW: 36.0 GPM [136 L/M] nominal. See performance chart.
INTERNAL LEAKAGE: 5 cu.in./min. [85 cc/m] @ 85% of crack pressure.
DEFINITION OF CRACK: evident at 0.06 GPM [0.25 LPM]
VALVE HOUSINGS: 2500 PSI [175 Bar] = Aluminum – Anodized.
5000 PSI [350 Bar] = Steel – Unplated.
OPERATING TEMPERATURE: –40° to +250° F. [–40° to +120° C.]
OPERATING MEDIA: All general purpose hydraulic fluids such as MIL–H–5606, SAE–#10, SAE–#20, etc.
INSTALLATION: No restriction.
FILTRATION: 25 microns or better.
SEAL KIT NUMBER: SKN–1227 for Buna "N".
SKV–1227 for Viton.
WEIGHT: 0.84 lb [.38 kg] cartridge only.
VALVE CAVITY: #C1225, See Page 0–023.0.

info.el@bucherhydraulics.com www.bucherhydraulics.com/commoncavity

© 2015 by Bucher Hydraulics, Inc., 2545 Northwest Parkway, Elgin, Illinois 60124, USA
All rights reserved.
Data is provided for the purpose of product description only, and must not be construed as warranted characteristics in the legal sense. The information does not relieve users from the duty of conducting their own evaluations and tests. Because the products are subject to continual improvement, we reserve the right to amend the product specifications contained in this catalogue.

BUCHER hydraulics

LOGIC CONTROL ELEMENT
SPOOL TYPE, VENT TO OPEN, SPOOL "C"

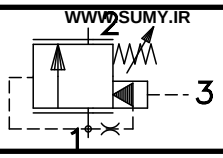

WWW.SUMY.IR

TORQUE:
Steel = 35/40 Ft–Lb. [47/54 Nm]
Aluminum = 25/30 Ft–Lb. [34/41 Nm]

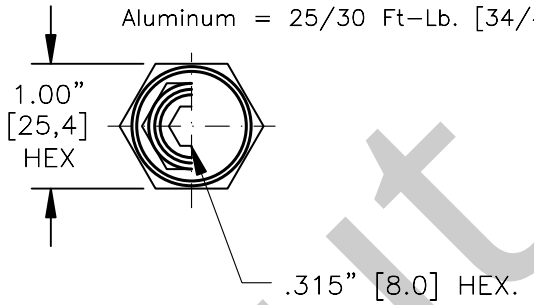

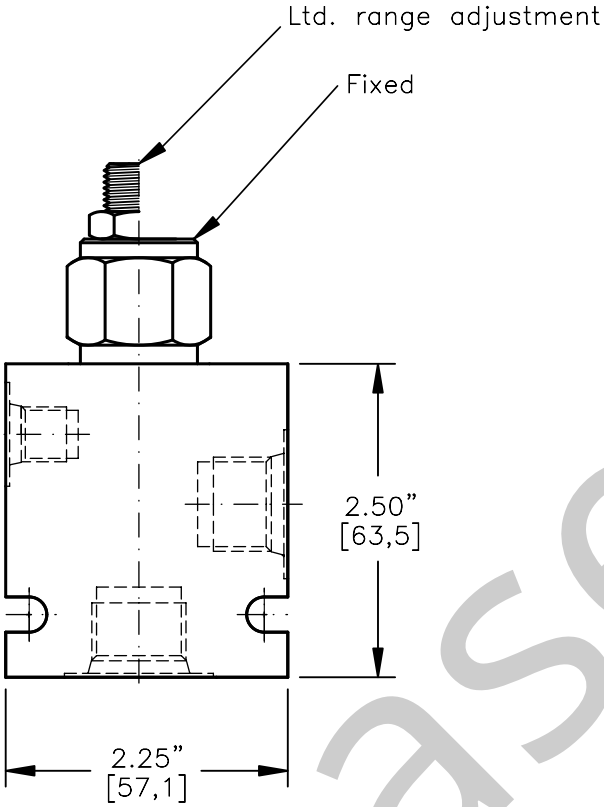

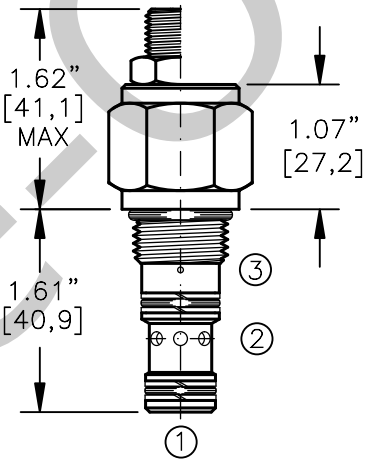

Phase-Out

FOR ALUMINUM OR STEEL VALVE HOUSING CONFIGURATIONS SEE PAGE 0–021.1

LCEF–08–X–C–X–X–XXX

BASIC

SIZE
08 = 3/4"–16 UNF

SEALS
N = BUNA "N"
V = VITON

SPOOL
"C"=SPOOL (VENT TO OPEN)

ADJUSTMENT
F = FIXED (FACTORY SET)
S = ADJUSTING SCREW
C = CAPPED
T = TAMPERPROOF
K = HANDKNOB
M = METAL HANDKNOB

FOR ADJUSTMENT CONTROL OPTIONS SEE PAGE 0–050.0

PRESSURE BIAS SPRING
070 = 70 PSI (FIXED)
100 = 100 PSI (FIXED)
160 = 40–160 PSI (ADJ)

PORTS
0 = CARTRIDGE ONLY
03BX = G 3/8" BSPP
08TX = SAE – #8

"A" – ALUM. HOUSING
"S" – STEEL HOUSING

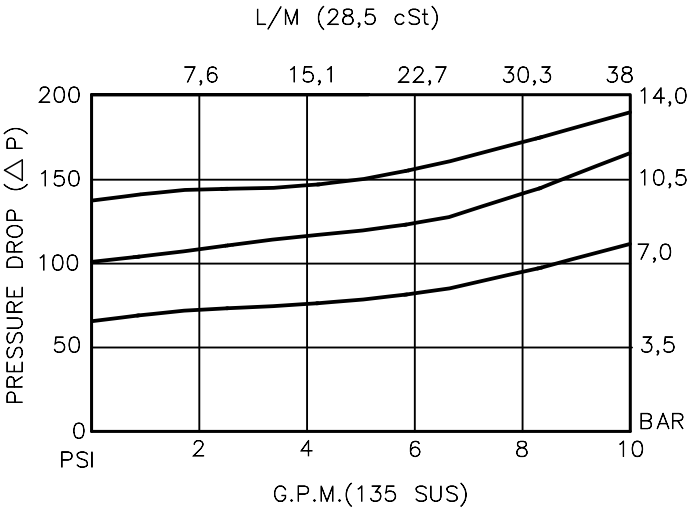

BUCHER hydraulics

WWW.SUMY.IR

LOGIC CONTROL ELEMENT
SPOOL TYPE, VENT TO OPEN, SPOOL "C"

DESCRIPTION

This unit is a DIRECT ACTING, SCREW IN CARTRIDGE STYLE, SPOOL TYPE, HYDRAULIC DIRECTIONAL LOGIC ELEMENT, with multi-functional potential when used with other directional, pressure or flow control devices.

OPERATIONS

This valve blocks flow from port 1 to port 2 with a spring bias. It will shift to allow full flow from port 1 to port 2 only when there is no pressure in port 3. Valve will close when port 3 is blocked and will maintain the same pressure plus the bias spring force value. When no pressure is present at port 3, it will allow flow from port 1 to port 2 once the bias spring force is overcome by the pressure in port 1. This is vent to open directional logic element.

FEATURES AND BENEFITS

Leakproof screw adjustment.
This valve has a fixed or an adjustable bias spring.
Adjustment screw can not be backed out of the valve.
Overset protection – spring can not go solid.
Hardened precision fitted spool & cage provides reliable, long life.
A unibody cage construction provides very low hysteresis and reliable operation.
All external carbon steel parts are plated for longer life against the elements.
Valve is available with fixed, screw, tamperproof, capped and handknob adjustments.
All cartridge valves are 100% functionally tested.
Industry common cavity.

Phase-Out

BUCHER hydraulics

WWW.SUMY.IR

LOGIC CONTROL ELEMENT
SPOOL TYPE, VENT TO OPEN, SPOOL "C"

SPECIFICATIONS

OPERATING PRESSURE: 5,000 PSI [350 Bar]
PROOF PRESSURE: 10,000 PSI [700 Bar]
FLOW: 10.0 GPM [38 L/M] nominal. See performance chart.
INTERNAL LEAKAGE: 5 cu.in./min. [85 cc/m] @ 85% of crack pressure.
DEFINITION OF CRACK: evident at 0.06 GPM [0.25 LPM]
VALVE HOUSINGS: 2500 PSI [175 Bar] = Aluminum – Anodized.
5000 PSI [350 Bar] = Steel – Unplated.
OPERATING TEMPERATURE: –40° to +250° F. [–40° to +120° C.]
OPERATING MEDIA: All general purpose hydraulic fluids such as MIL–H–5606, SAE–#10, SAE–#20, etc.
INSTALLATION: No restriction.
FILTRATION: 25 microns or better.
SEAL KIT NUMBER: SKN–0827 for buna "N".
SKV–0827 for viton.
WEIGHT: 0.28 lb [.13 kg] cartridge only.
VALVE CAVITY: #C0825, See Page 0–021.0.

Phase-Out

info.el@bucherhydraulics.com www.bucherhydraulics.com/commoncavity

© 2015 by Bucher Hydraulics, Inc., 2545 Northwest Parkway, Elgin, Illinois 60124, USA
All rights reserved.
Data is provided for the purpose of product description only, and must not be construed as warranted characteristics in the legal sense. The information does not relieve users from the duty of conducting their own evaluations and tests. Because the products are subject to continual improvement, we reserve the right to amend the product specifications contained in this catalogue.

BUCHER hydraulics

LOGIC CONTROL ELEMENT
SPOOL TYPE, VENT TO OPEN, SPOOL "C".

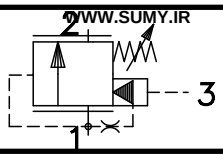

WWW.SUMY.IR

TORQUE:
Steel = 55/60 Ft–Lb. [74/81 Nm]
Aluminum = 35/40 Ft–Lb. [47/54 Nm]

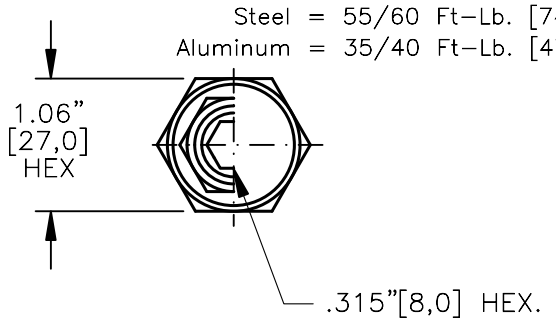

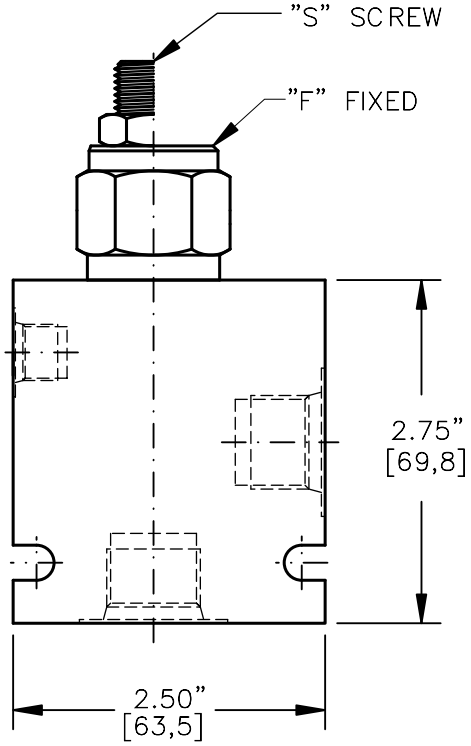

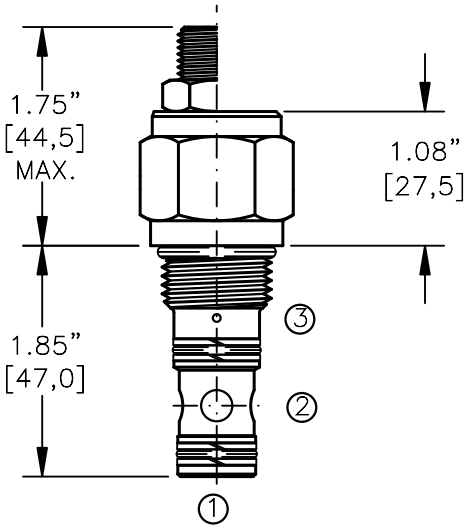

FOR ALUMINUM OR STEEL VALVE HOUSING CONFIGURATIONS SEE PAGE 0–022.1

LCEF–10–X–C–X–X–XXX

BASIC

SIZE
10 = 7/8"–14 UNF

SEALS
N = BUNA "N"
V = VITON

SPOOL
"C"=SPOOL (VENT TO OPEN)

ADJUSTMENT
F = FIXED (FACTORY SET)
S = ADJUSTING SCREW
C = CAPPED
T = TAMPERPROOF
K = HANDKNOB
M = METAL HANDKNOB

FOR ADJUSTMENT CONTROL OPTIONS SEE PAGE 0–050.0

PRESSURE BIAS SPRING
070 = 70 PSI (FIXED)
100 = 100 PSI (FIXED)
160 = 40–160 PSI (ADJ)

PORTS
0 = CARTRIDGE ONLY
03BX = G 3/8" BSPP
04BX = G 1/2" BSPP
08TX = SAE – #8
10TX = SAE – #10

"A" – ALUM. HOUSING
"S" – STEEL HOUSING

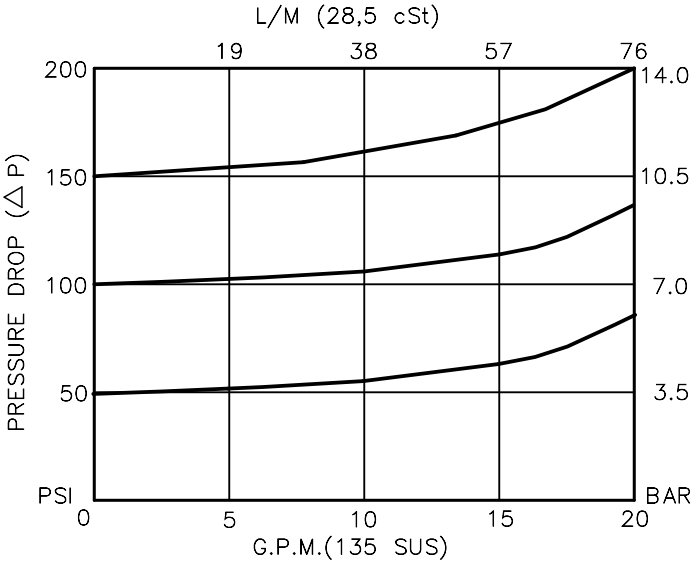

BUCHER hydraulics

WWW.SUMY.IR

LOGIC CONTROL ELEMENT
SPOOL TYPE, VENT TO OPEN, SPOOL "C".

DESCRIPTION

This unit is a DIRECT ACTING, SCREW IN CARTRIDGE STYLE, SPOOL TYPE, HYDRAULIC DIRECTIONAL LOGIC ELEMENT, with multi-functional potential when used with other directional, pressure or flow control devices.

OPERATIONS

This valve blocks flow from port 1 to port 2 with a spring bias. It will shift to allow full flow from port 1 to port 2 only when there is no pressure in port 3. Valve will close when port 3 is blocked and will maintain the same pressure plus the bias spring force value. When no pressure is present at port 3, it will allow flow from port 1 to port 2 once the bias spring force is overcome by the pressure in port 1. This is vent to open directional logic element.

FEATURES AND BENEFITS

Leakproof screw adjustment.
This valve has a fixed or an adjustable bias spring.
Adjustment screw can not be backed out of the valve.
Overset protection – spring can not go solid.
Hardened precision fitted spool & cage provides reliable, long life.
A unibody cage construction provides very low hysteresis and reliable operation.
All external carbon steel parts are plated for longer life against the elements.
Valve is available with fixed, screw, tamperproof, capped and handknob adjustments.
All cartridge valves are 100% functionally tested.
Industry common cavity.

BUCHER hydraulics

WWW.SUMY.IR

LOGIC CONTROL ELEMENT
SPOOL TYPE, VENT TO OPEN, SPOOL "C".

SPECIFICATIONS

OPERATING PRESSURE: 5,000 PSI [350 Bar]
PROOF PRESSURE: 10,000 PSI [700 Bar]
FLOW: 20.0 GPM [76 L/M] nominal. See performance chart.
INTERNAL LEAKAGE: 5 cu.in./min. [85 cc/m] @ 85% of crack pressure.
DEFINITION OF CRACK: evident at 0.06 GPM [0.25 LPM]
VALVE HOUSINGS: 2500 PSI [175 Bar] = Aluminum – Anodized.
5000 PSI [350 Bar] = Steel – Unplated.
OPERATING TEMPERATURE: –40° to +250° F. [–40° to +120° C.]
OPERATING MEDIA: All general purpose hydraulic fluids such as MIL–H–5606, SAE–#10, SAE–#20, etc.
INSTALLATION: No restriction.
FILTRATION: 25 microns or better.
SEAL KIT NUMBER: SKN–1027 for buna "N".
SKV–1027 for viton.
WEIGHT: 0.46 lb [.21 kg] cartridge only.
VALVE CAVITY: #C1025, See Page 0–022.0.

info.el@bucherhydraulics.com www.bucherhydraulics.com/commoncavity

© 2015 by Bucher Hydraulics, Inc., 2545 Northwest Parkway, Elgin, Illinois 60124, USA
All rights reserved.
Data is provided for the purpose of product description only, and must not be construed as warranted characteristics in the legal sense. The information does not relieve users from the duty of conducting their own evaluations and tests. Because the products are subject to continual improvement, we reserve the right to amend the product specifications contained in this catalogue.

BUCHER hydraulics

LOGIC CONTROL ELEMENT
SPOOL TYPE, VENT TO OPEN, SPOOL "C".

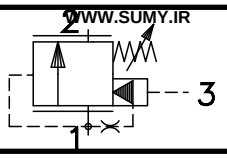

WWW.SUMY.IR

TORQUE:
Steel = 70/75 Ft–Lb. [95/102 Nm]
Aluminum = 55/60 Ft–Lb. [74/81 Nm]

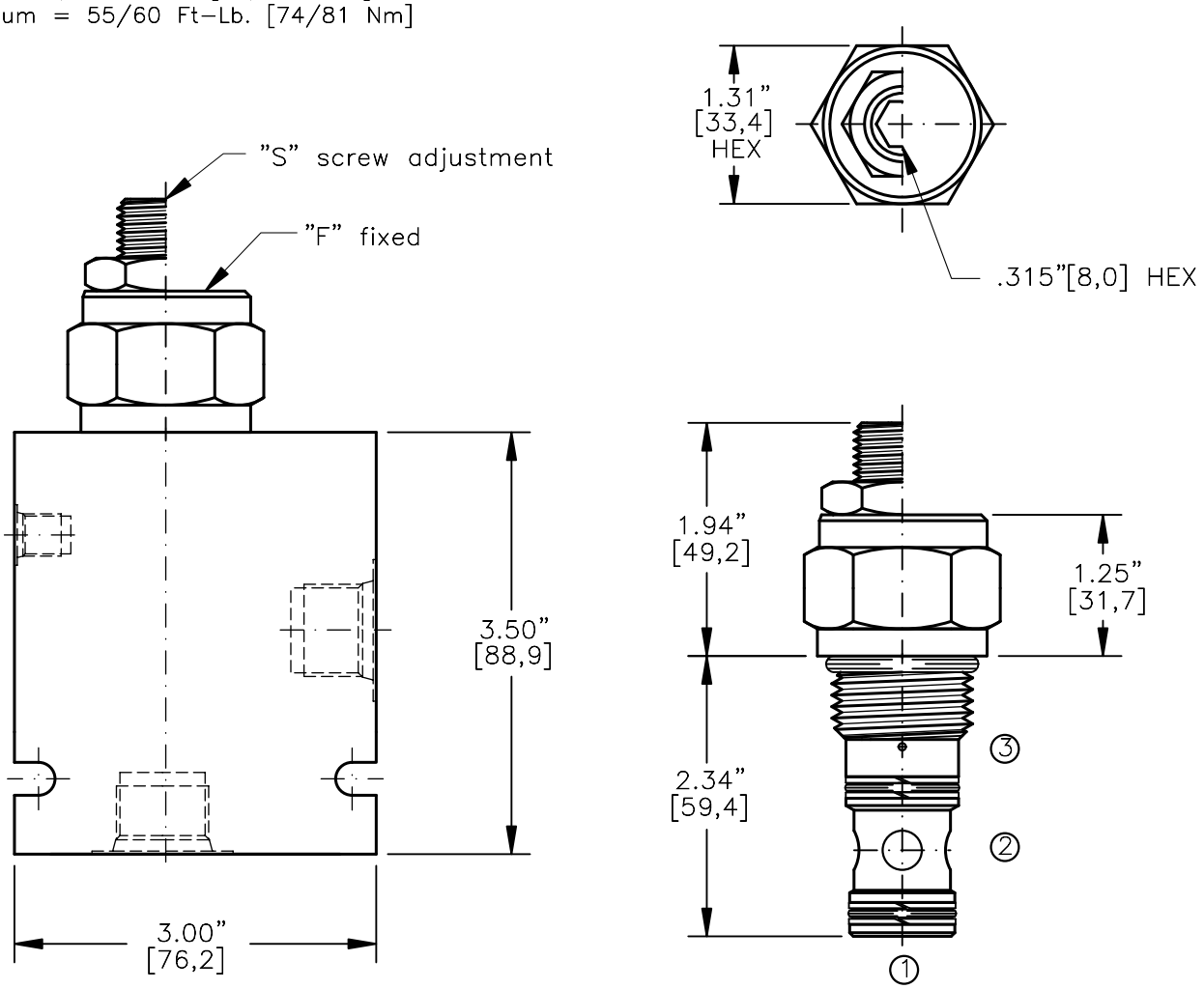

FOR ALUMINUM OR STEEL VALVE HOUSING CONFIGURATIONS SEE PAGE 0–023–1.

LCEF–12–X–C–X–X–XXX

BASIC

SIZE
12 = 1.062"–12 UNF

SEALS
N = BUNA "N"
V = VITON

SPOOL
"C"=SPOOL (VENT TO OPEN)

ADJUSTMENT
F = FIXED (FACTORY SET)
S = ADJUSTING SCREW
C = CAPPED
T = TAMPERPROOF

PRESSURE BIAS SPRING
070 = 70 PSI (FIXED)
100 = 100 PSI (FIXED)
160 = 40–160 PSI (ADJ)

PORTS
0 = CARTRIDGE ONLY
04BX = G 1/2" BSPP
06BX = G 3/4" BSPP
10TX = SAE – #10
12TX = SAE – #12

"A" – ALUM. HOUSING
"S" – STEEL HOUSING

FOR ADJUSTMENT CONTROL OPTIONS SEE PAGE 0–050.0

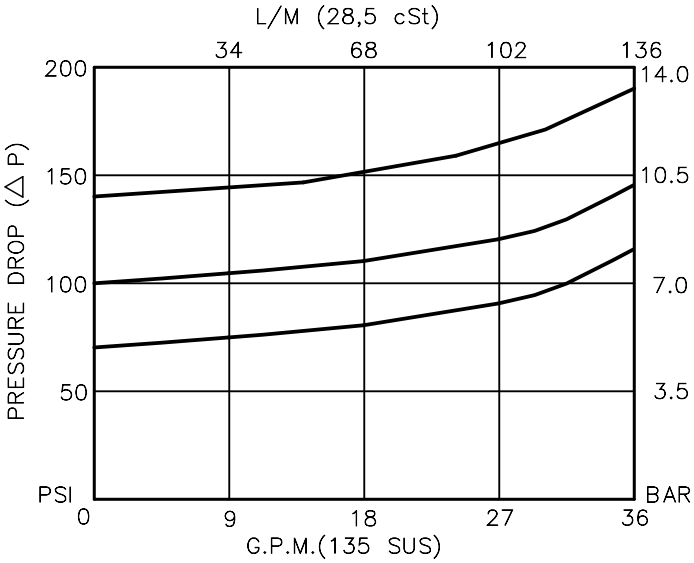

BUCHER hydraulics

WWW.SUMY.IR

LOGIC CONTROL ELEMENT
SPOOL TYPE, VENT TO OPEN, SPOOL "C".

DESCRIPTION

This unit is a DIRECT ACTING, SCREW IN CARTRIDGE STYLE, SPOOL TYPE, HYDRAULIC DIRECTIONAL LOGIC ELEMENT, with multi-functional potential when used with other directional, pressure or flow control devices.

OPERATIONS

This valve blocks flow from port 1 to port 2 with a spring bias. It will shift to allow full flow from port 1 to port 2 only when there is no pressure in port 3. Valve will close when port 3 is blocked and will maintain the same pressure plus the bias spring force value. When no pressure is present at port 3, it will allow flow from port 1 to port 2 once the bias spring force is overcome by the pressure in port 1. This is vent to open directional logic element.

FEATURES AND BENEFITS

Leakproof screw adjustment.
This valve has a fixed or an adjustable bias spring.
Adjustment screw can not be backed out of the valve.
Overset protection – spring can not go solid.
Hardened precision fitted spool & cage provides reliable, long life.
A unibody cage construction provides very low hysteresis and reliable operation.
All external carbon steel parts are plated for longer life against the elements.
Valve is available with fixed, screw, tamperproof and capped adjustments.
All cartridge valves are 100% functionally tested.

BUCHER hydraulics

WWW.SUMY.IR

LOGIC CONTROL ELEMENT
SPOOL TYPE, VENT TO OPEN, SPOOL "C".

SPECIFICATIONS

OPERATING PRESSURE: 5,000 PSI [350 Bar]
PROOF PRESSURE: 10,000 PSI [700 Bar]
FLOW: 36.0 GPM [136 L/M] nominal. See performance chart.
INTERNAL LEAKAGE: 5 cu.in./min. [85 cc/m] @ 85% of crack pressure.
DEFINITION OF CRACK: evident at 0.06 GPM [0.25 LPM]
VALVE HOUSINGS: 2500 PSI [175 Bar] = Aluminum – Anodized.
5000 PSI [350 Bar] = Steel – Unplated.
OPERATING TEMPERATURE: –40° to +250° F. [–40° to +120° C.]
OPERATING MEDIA: All general purpose hydraulic fluids such as MIL–H–5606, SAE–#10, SAE–#20, etc.
INSTALLATION: No restriction.
FILTRATION: 25 microns or better.
SEAL KIT NUMBER: SKN–1227 for buna "N".
SKV–1227 for viton.
WEIGHT: 0.84 lb [.38 kg] cartridge only.
VALVE CAVITY: #C1225, See Page 0–023.0.

info.el@bucherhydraulics.com www.bucherhydraulics.com/commoncavity

© 2015 by Bucher Hydraulics, Inc., 2545 Northwest Parkway, Elgin, Illinois 60124, USA
All rights reserved.
Data is provided for the purpose of product description only, and must not be construed as warranted characteristics in the legal sense. The information does not relieve users from the duty of conducting their own evaluations and tests. Because the products are subject to continual improvement, we reserve the right to amend the product specifications contained in this catalogue.

BUCHER hydraulics

LOGIC CONTROL ELEMENT
SPOOL TYPE, VENT TO CLOSE, SPOOL "D"

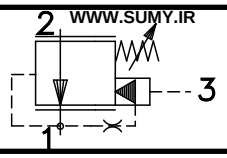

WWW.SUMY.IR

TORQUE:
Steel = 35/40 Ft–Lb. [47/54 Nm]
Aluminum = 25/30 Ft–Lb. [34/41 Nm]

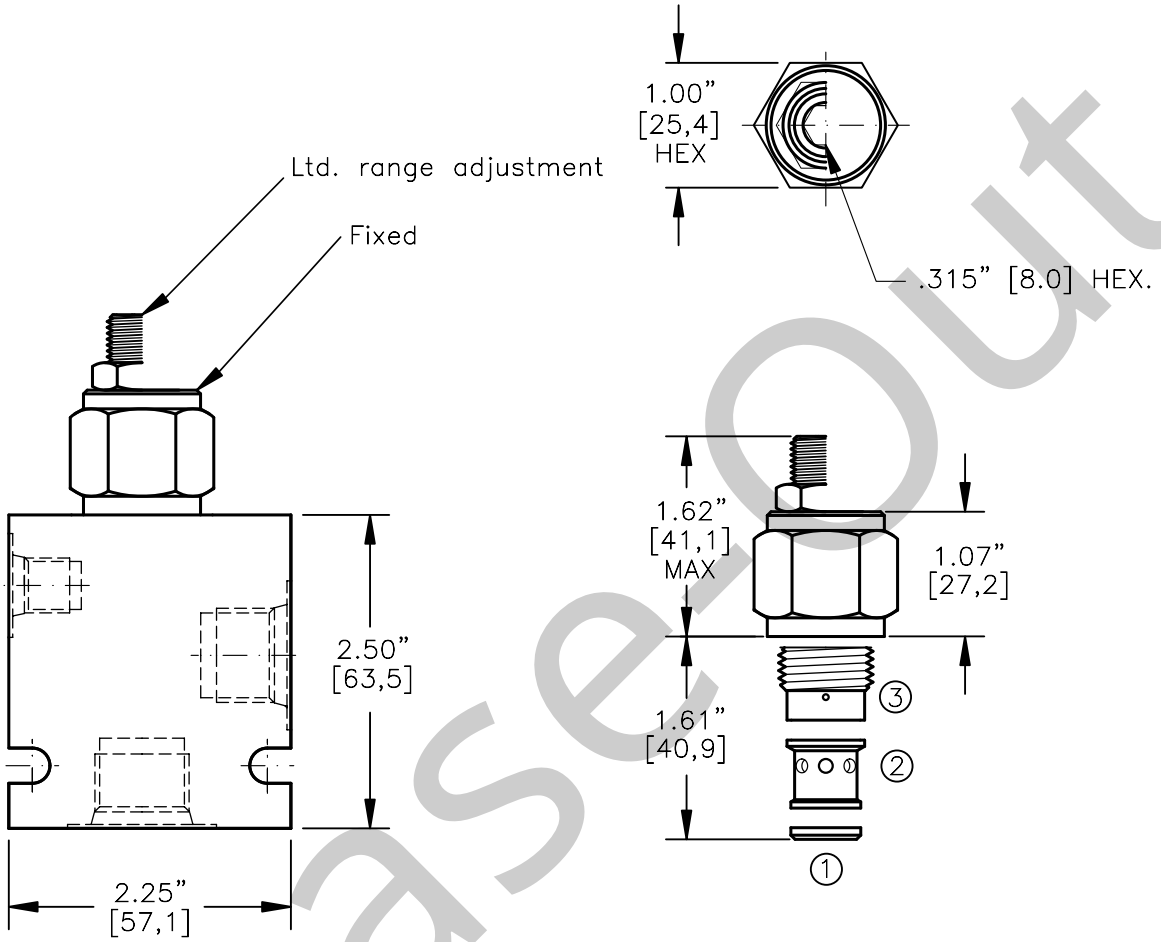

FOR ALUMINUM OR STEEL VALVE HOUSING CONFIGURATIONS SEE PAGE 0–021.1

LCEF–08–X–D–X–X–XXX

BASIC

SIZE
08 = 3/4"–16 UNF

SEALS
N = BUNA "N"
V = VITON

SPOOL
"D"=SPOOL (VENT TO CLOSE)

ADJUSTMENT
F = FIXED (FACTORY SET)
S = ADJUSTING SCREW
C = CAPPED
T = TAMPERPROOF
K = HANDKNOB
M = METAL HANDKNOB

FOR ADJUSTMENT CONTROL OPTIONS SEE PAGE 0–050.0

PRESSURE BIAS SPRING
070 = 70 PSI (FIXED)
100 = 100 PSI (FIXED)
160 = 40–160 PSI (ADJ)

PORTS
0
03BX
08TX

"A" – ALUM. HOUSING
"S" – STEEL HOUSING

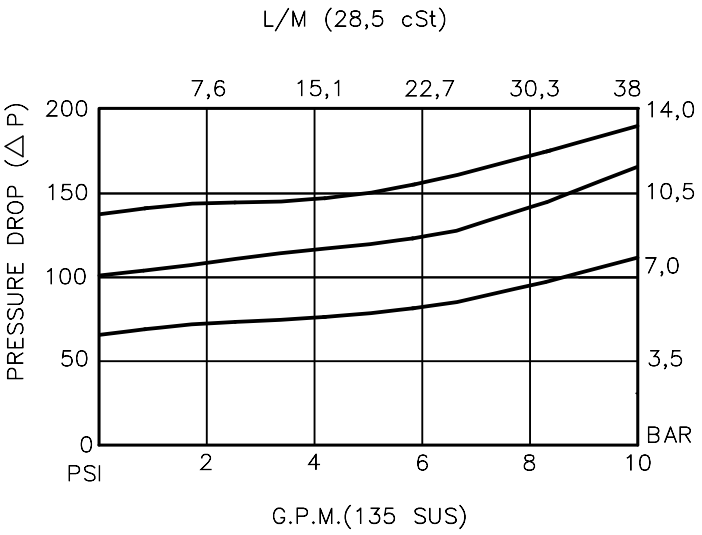

Phase-Out

BUCHER hydraulics

WWW.SUMY.IR

LOGIC CONTROL ELEMENT
SPOOL TYPE, VENT TO CLOSE, SPOOL "D"

DESCRIPTION

This unit is a DIRECT ACTING, SCREW IN CARTRIDGE STYLE, SPOOL TYPE, HYDRAULIC DIRECTIONAL LOGIC ELEMENT, with multi-functional potential when used with other directional, pressure or flow control devices.

OPERATIONS

This valve is normally open from port 2 to port 1 with a spring bias. It will shift to allow full flow from port 2 to port 1 only when there is pressure in port 3. Valve will close when port 3 is opened and will maintain the same pressure plus the bias spring force value. When pressure is present at port 3, it will allow flow from port 2 to port 1, it will close once the pressure and the bias spring force is overcome by pressure in port 1. This is vent to close directional control logic element.

FEATURES AND BENEFITS

Leakproof screw adjustment.
This valve has a fixed or an adjustable bias spring.
Adjustment screw can not be backed out of the valve.
Overset protection – spring can not go solid.
Hardened precision fitted spool & cage provides reliable, long life.
A unibody cage construction provides very low hysteresis and reliable operation.
All external carbon steel parts are plated for longer life against the elements.
Valve is available with fixed, screw, tamperproof, capped and handknob adjustments.
All cartridge valves are 100% functionally tested.
Industry common cavity.

Phase-Out

BUCHER hydraulics

WWW.SUMY.IR

LOGIC CONTROL ELEMENT
SPOOL TYPE, VENT TO CLOSE, SPOOL "D"

SPECIFICATIONS

OPERATING PRESSURE: 5,000 PSI [350 Bar]
PROOF PRESSURE: 10,000 PSI [700 Bar]
FLOW: 10.0 GPM [38 L/M] nominal. See performance chart.
INTERNAL LEAKAGE: 5 cu.in./min. [85 cc/m] @ 85% of crack pressure.
DEFINITION OF CRACK: evident at 0.06 GPM [0.25 LPM]
VALVE HOUSINGS: 2500 PSI [175 Bar] = Aluminum – Anodized.
5000 PSI [350 Bar] = Steel – Unplated.
OPERATING TEMPERATURE: –40° to +250° F. [–40° to +120° C.]
OPERATING MEDIA: All general purpose hydraulic fluids such as MIL–H–5606, SAE–#10, SAE–#20, etc.
INSTALLATION: No restriction.
FILTRATION: 25 microns or better.
SEAL KIT NUMBER: SKN–0827 for buna "N".
SKV–0827 for viton.
WEIGHT: 0.28 lb [.13 kg] cartridge only.
VALVE CAVITY: #C0825, See Page 0–021.0.

Phase-Out

info.el@bucherhydraulics.com www.bucherhydraulics.com/commoncavity

© 2015 by Bucher Hydraulics, Inc., 2545 Northwest Parkway, Elgin, Illinois 60124, USA
All rights reserved.
Data is provided for the purpose of product description only, and must not be construed as warranted characteristics in the legal sense. The information does not relieve users from the duty of conducting their own evaluations and tests. Because the products are subject to continual improvement, we reserve the right to amend the product specifications contained in this catalogue.

BUCHER hydraulics

LOGIC CONTROL ELEMENT
SPOOL TYPE, VENT TO CLOSE, SPOOL "D".

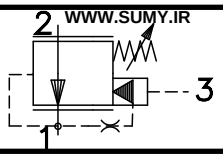

WWW.SUMY.IR

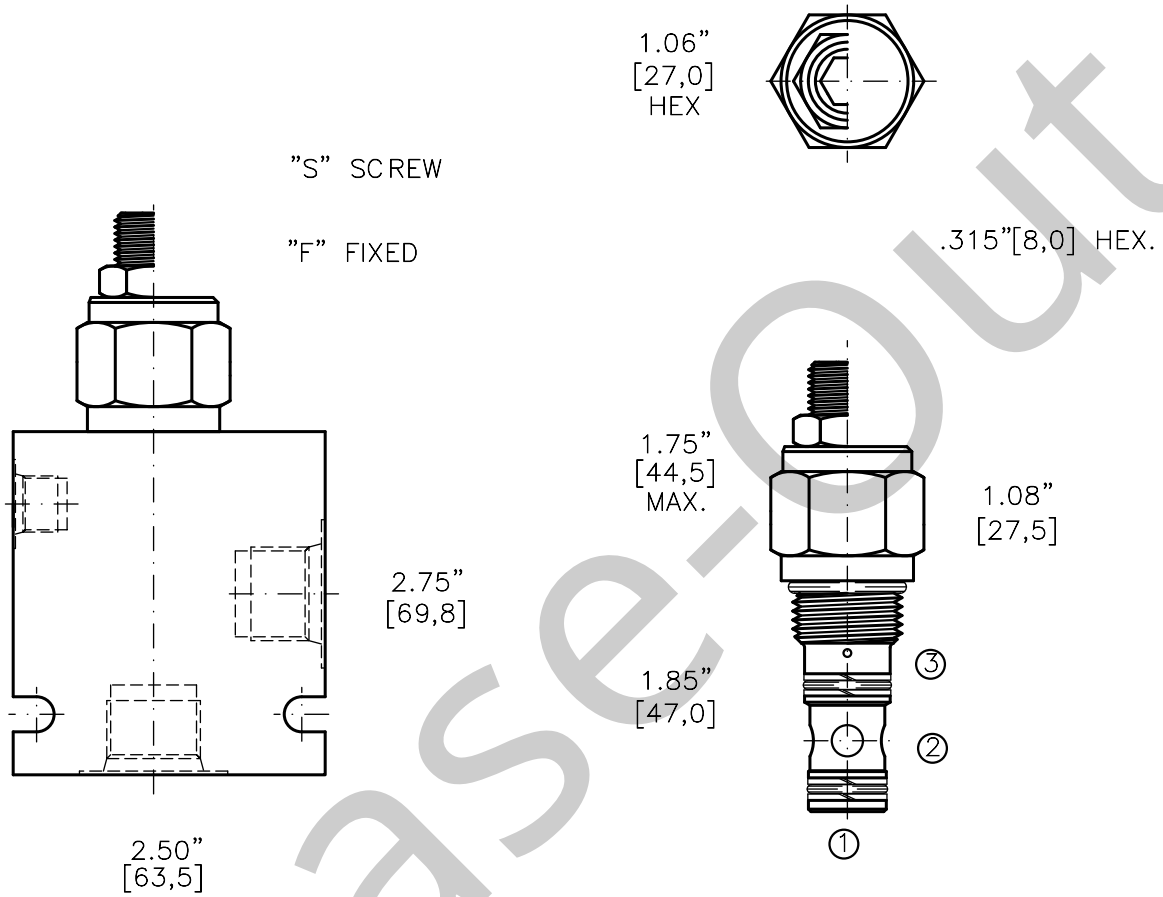

Phase-Out

FOR ALUMINUM OR STEEL VALVE HOUSING CONFIGURATIONS SEE PAGE 0–022.1

LCEF–10–X–D–X–X–XXX

BASIC

SIZE
10 = 7/8"–14 UNF

SEALS
N = BUNA "N"
V = VITON

SPOOL
"D"= SPOOL (VENT TO OPEN)

ADJUSTMENT
F = FIXED (FACTORY SET)
S = ADJUSTING SCREW
C = CAPPED
T = TAMPERPROOF
K = HANDKNOB
M = METAL HANDKNOB

FOR ADJUSTMENT CONTROL OPTIONS SEE PAGE 0–050.0

PRESSURE BIAS SPRING
070 = 70 PSI (FIXED)
100 = 100 PSI (FIXED)
160 = 40–160 PSI (ADJ)

PORTS
0 = CARTRIDGE ONLY
03BX = G 3/8" BSPP
04BX = G 1/2" BSPP
08TX = SAE – #8
10TX = SAE – #10

"A" – ALUM. HOUSING
"S" – STEEL HOUSING

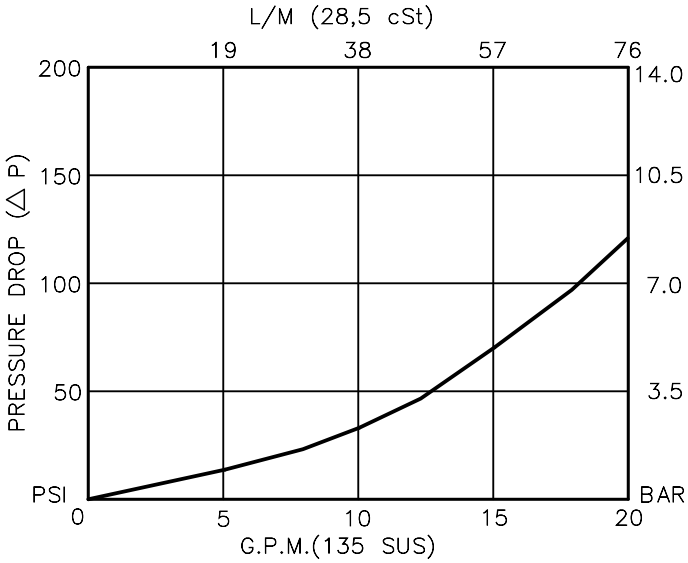

BUCHER hydraulics

WWW.SUMY.IR

LOGIC CONTROL ELEMENT
SPOOL TYPE, VENT TO CLOSE, SPOOL "D".

DESCRIPTION

This unit is a DIRECT ACTING, SCREW IN CARTRIDGE STYLE, SPOOL TYPE, HYDRAULIC DIRECTIONAL LOGIC ELEMENT, with multi-functional potential when used with other directional, pressure or flow control devices.

OPERATIONS

This valve is normally open from port 2 to port 1 with a spring bias. It will shift to allow full flow from port 2 to port 1 only when there is pressure in port 3. Valve will close when port 3 is opened and will maintain the same pressure plus the bias spring force value. When pressure is present at port 3, it will allow flow from port 2 to port 1, it will close once the pressure and the bias spring force is overcome by pressure in port 1. This is vent to close directional control logic element.

FEATURES AND BENEFITS

Leakproof screw adjustment.
This valve has a fixed or an adjustable bias spring.
Adjustment screw can not be backed out of the valve.
Overset protection – spring can not go solid.
Hardened precision fitted spool & cage provides reliable, long life.
A unibody cage construction provides very low hysteresis and reliable operation.
All external carbon steel parts are plated for longer life against the elements.
Valve is available with fixed, screw, tamperproof, capped and handknob adjustments.
All cartridge valves are 100% functionally tested.
Industry common cavity.

Phase-Out

BUCHER hydraulics

WWW.SUMY.IR

LOGIC CONTROL ELEMENT
SPOOL TYPE, VENT TO CLOSE, SPOOL "D".

SPECIFICATIONS

OPERATING PRESSURE: 5,000 PSI [350 Bar]
PROOF PRESSURE: 10,000 PSI [700 Bar]
FLOW: 20.0 GPM [76 L/M] nominal. See performance chart.
INTERNAL LEAKAGE: 5 cu.in./min. [85 cc/m] @ 85% of crack pressure.
DEFINITION OF CRACK: evident at 0.06 GPM [0.25 LPM]
VALVE HOUSINGS: 2500 PSI [175 Bar] = Aluminum – Anodized.
5000 PSI [350 Bar] = Steel – Unplated.
OPERATING TEMPERATURE: –40° to +250° F. [–40° to +120° C.]
OPERATING MEDIA: All general purpose hydraulic fluids such as MIL–H–5606, SAE–#10, SAE–#20, etc.
INSTALLATION: No restriction.
FILTRATION: 25 microns or better.
SEAL KIT NUMBER: SKN–1027 for buna "N".
SKV–1027 for viton.
WEIGHT: 0.46 lb [.21 kg] cartridge only.
VALVE CAVITY: #C1025, See Page 0–022.0.

Phase-Out

info.el@bucherhydraulics.com www.bucherhydraulics.com/commoncavity

© 2015 by Bucher Hydraulics, Inc., 2545 Northwest Parkway, Elgin, Illinois 60124, USA
All rights reserved.
Data is provided for the purpose of product description only, and must not be construed as warranted characteristics in the legal sense. The information does not relieve users from the duty of conducting their own evaluations and tests. Because the products are subject to continual improvement, we reserve the right to amend the product specifications contained in this catalogue.

BUCHER hydraulics

LOGIC CONTROL ELEMENT
SPOOL TYPE, VENT TO CLOSE, SPOOL "D".

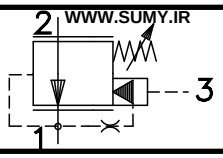

WWW.SUMY.IR

TORQUE:
Steel = 70/75 Ft–Lb. [95/102 Nm]
Aluminum = 55/60 Ft–Lb. [74/81 Nm]

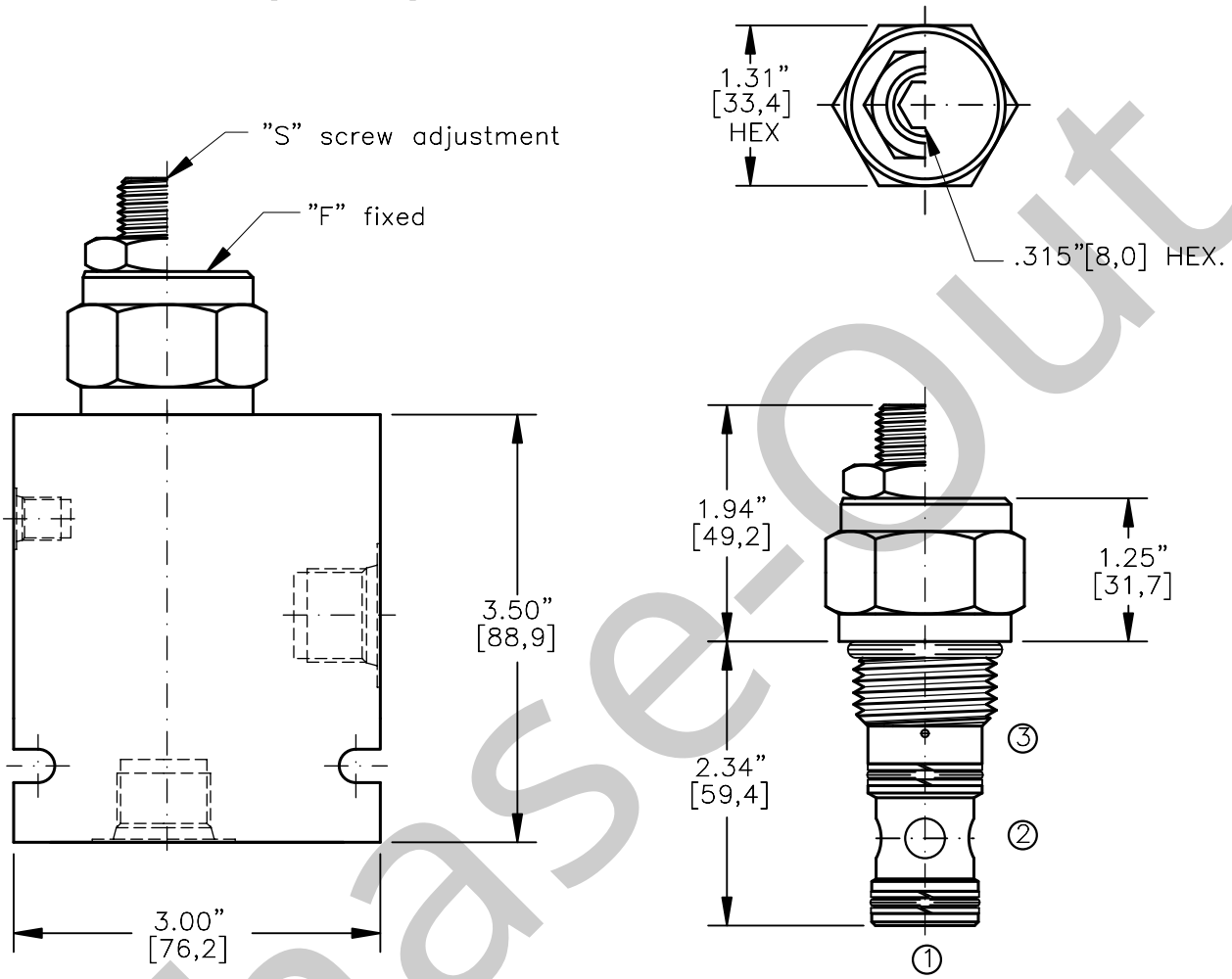

FOR ALUMINUM OR STEEL VALVE HOUSING CONFIGURATIONS SEE PAGE 0–023–1.

LCEF–12–X–D–X–X–XXX

BASIC

SIZE
12 = 1.062"–12 UNF

SEALS
N = BUNA "N"
V = VITON

SPOOL
"D"=SPOOL (VENT TO OPEN)

ADJUSTMENT
F = FIXED (FACTORY SET)
S = ADJUSTING SCREW
C = CAPPED
T = TAMPERPROOF

PRESSURE BIAS SPRING
070 = 70 PSI (FIXED)
100 = 100 PSI (FIXED)
160 = 40–160 PSI (ADJ)

PORTS
0 = CARTRIDGE ONLY
04BX = G 1/2" BSPP
06BX = G 3/4" BSPP
10TX = SAE – #10
12TX = SAE – #12

"A" – ALUM. HOUSING
"S" – STEEL HOUSING

FOR ADJUSTMENT CONTROL OPTIONS SEE PAGE 0–050.0

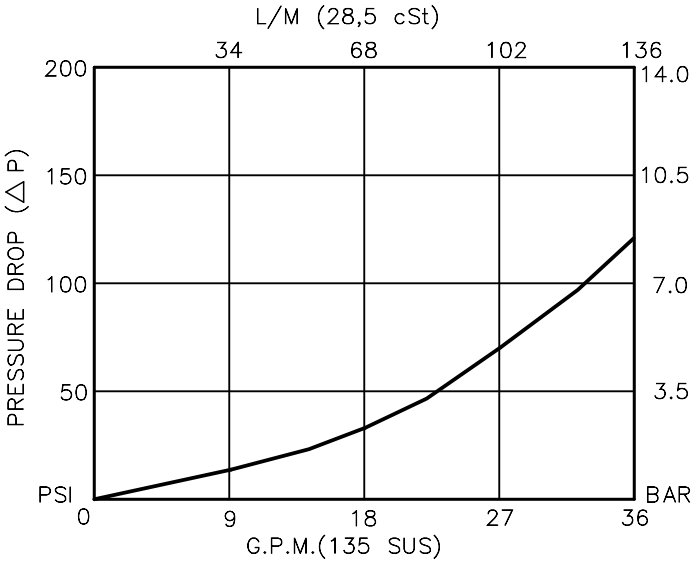

Phase-Out

BUCHER hydraulics

WWW.SUMY.IR

LOGIC CONTROL ELEMENT
SPOOL TYPE, VENT TO CLOSE, SPOOL "D".

DESCRIPTION

This unit is a DIRECT ACTING, SCREW IN CARTRIDGE STYLE, SPOOL TYPE, HYDRAULIC DIRECTIONAL LOGIC ELEMENT, with multi-functional potential when used with other directional, pressure or flow control devices.

OPERATIONS

This valve is normally open from port 2 to port 1 with a spring bias. It will shift to allow full flow from port 2 to port 1 only when there is pressure in port 3. Valve will close when port 3 is opened and will maintain the same pressure plus the bias spring force value. When pressure is present at port 3, it will allow flow from port 2 to port 1, it will close once the pressure and the bias spring force is overcome by pressure in port 1. This is vent to close directional control logic element.

FEATURES AND BENEFITS

Leakproof screw adjustment.
This valve has a fixed or an adjustable bias spring.
Adjustment screw can not be backed out of the valve.
Overset protection – spring can not go solid.
Hardened precision fitted spool & cage provides reliable, long life.
A unibody cage construction provides very low hysteresis and reliable operation.
All external carbon steel parts are plated for longer life against the elements.
Valve is available with fixed, screw, tamperproof and capped adjustments.
All cartridge valves are 100% functionally tested.

Phase-Out

BUCHER hydraulics

WWW.SUMY.IR

LOGIC CONTROL ELEMENT
SPOOL TYPE, VENT TO CLOSE, SPOOL "D".

SPECIFICATIONS

OPERATING PRESSURE: 5,000 PSI [350 Bar]
PROOF PRESSURE: 10,000 PSI [700 Bar]
FLOW: 36.0 GPM [136 L/M] nominal. See performance chart.
INTERNAL LEAKAGE: 5 cu.in./min. [85 cc/m] @ 85% of crack pressure.
DEFINITION OF CRACK: evident at 0.06 GPM [0.25 LPM]
VALVE HOUSINGS: 2500 PSI [175 Bar] = Aluminum – Anodized.
5000 PSI [350 Bar] = Steel – Unplated.
OPERATING TEMPERATURE: –40° to +250° F. [–40° to +120° C.]
OPERATING MEDIA: All general purpose hydraulic fluids such as MIL–H–5606, SAE–#10, SAE–#20, etc.
INSTALLATION: No restriction.
FILTRATION: 25 microns or better.
SEAL KIT NUMBER: SKN–1227 for Buna "N".
SKV–1227 for Viton.
WEIGHT: 0.84 lb [.38 kg] cartridge only.
VALVE CAVITY: #C1225, See Page 0–023.0.

Phase-Out

info.el@bucherhydraulics.com www.bucherhydraulics.com/commoncavity

© 2015 by Bucher Hydraulics, Inc., 2545 Northwest Parkway, Elgin, Illinois 60124, USA
All rights reserved.
Data is provided for the purpose of product description only, and must not be construed as warranted characteristics in the legal sense. The information does not relieve users from the duty of conducting their own evaluations and tests. Because the products are subject to continual improvement, we reserve the right to amend the product specifications contained in this catalogue.

BUCHER hydraulics

LOGIC CONTROL ELEMENT
SPOOL TYPE, PILOT TO OPEN, SPOOL "F"

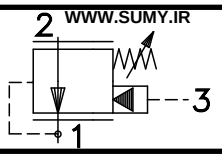

WWW.SUMY.IR

TORQUE:
Steel = 35/40 Ft–Lb. [47/54 Nm]
Aluminum = 25/30 Ft–Lb. [34/41 Nm]

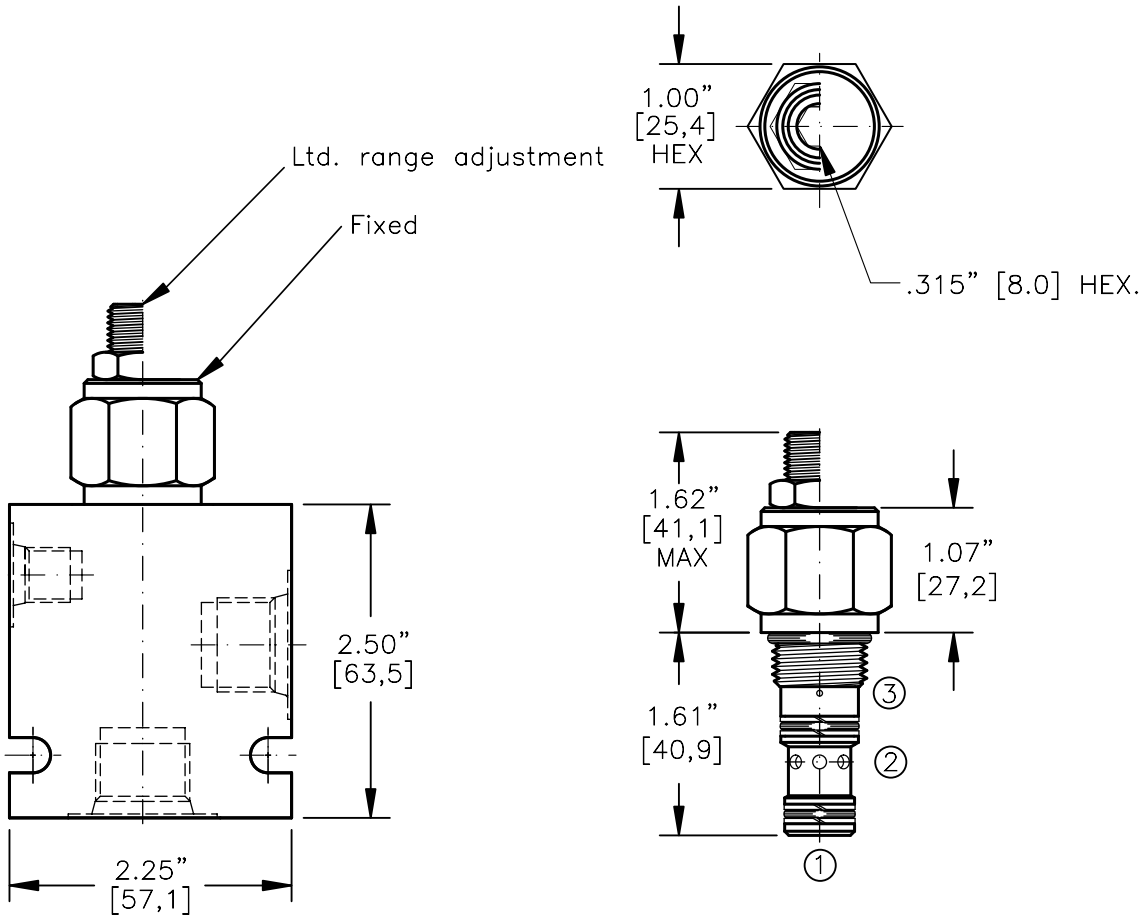

FOR ALUMINUM OR STEEL VALVE HOUSING CONFIGURATIONS SEE PAGE 0–021.1

LCEF–08–X–F–X–X–XXX

BASIC

SIZE
08 = 3/4"–16 UNF

SEALS
N = BUNA "N"
V = VITON

SPOOL
"F"=SPOOL (PILOT TO OPEN)

ADJUSTMENT
F = FIXED (FACTORY SET)
S = ADJUSTING SCREW
C = CAPPED
T = TAMPERPROOF
K = HANDKNOB
M = METAL HANDKNOB

FOR ADJUSTMENT CONTROL OPTIONS SEE PAGE 0–050.0

PRESSURE BIAS SPRING
070 = 70 PSI (FIXED)
100 = 100 PSI (FIXED)
160 = 40–160 PSI (ADJ)

PORTS
0 = CARTRIDGE ONLY
03BX = G 3/8" BSPP
08TX = SAE – #8

"A" – ALUM. HOUSING
"S" – STEEL HOUSING

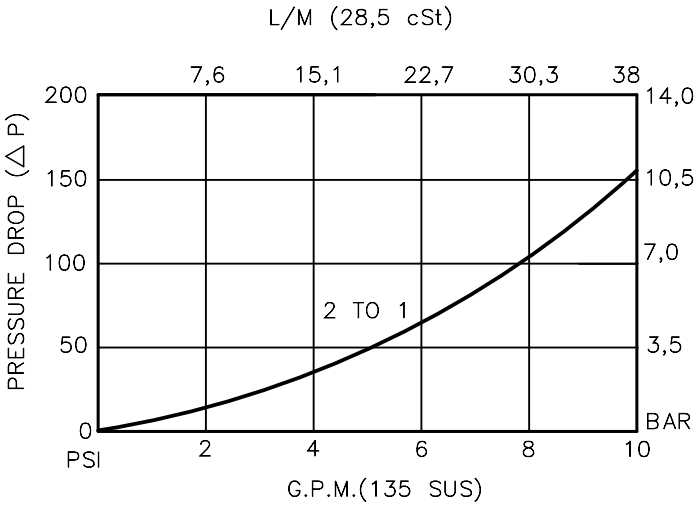

BUCHER hydraulics

WWW.SUMY.IR

LOGIC CONTROL ELEMENT
SPOOL TYPE, PILOT TO OPEN, SPOOL "F"

DESCRIPTION

This unit is a DIRECT ACTING, SCREW IN CARTRIDGE STYLE, SPOOL TYPE, HYDRAULIC DIRECTIONAL LOGIC ELEMENT, with multi-functional potential when used with other directional, pressure or flow control devices.

OPERATIONS

This valve is normally open from port 2 to port 1 with a spring bias. It will shift to allow full flow from port 2 to port 1 only when there is pressure in port 3. Valve will close when port 3 is opened and will maintain the same pressure plus the bias spring force value. When pressure is present at port 3, it will allow flow from port 2 to port 1, it will close once the pressure and the bias spring force is overcome by pressure in port 1. This is pilot to open directional control logic element.

FEATURES AND BENEFITS

Leakproof screw adjustment.
This valve has a fixed or an adjustable bias spring.
Adjustment screw can not be backed out of the valve.
Overset protection – spring can not go solid.
Hardened precision fitted spool & cage provides reliable, long life.
A unibody cage construction provides very low hysteresis and reliable operation.
All external carbon steel parts are plated for longer life against the elements.
Valve is available with fixed, screw, tamperproof, capped and handknob adjustments.
All cartridge valves are 100% functionally tested.
Industry common cavity.

BUCHER hydraulics

WWW.SUMY.IR

LOGIC CONTROL ELEMENT
SPOOL TYPE, PILOT TO OPEN, SPOOL "F"

SPECIFICATIONS

OPERATING PRESSURE: 5,000 PSI [350 Bar]
PROOF PRESSURE: 10,000 PSI [700 Bar]
FLOW: 10.0 GPM [38 L/M] nominal. See performance chart.
INTERNAL LEAKAGE: 5 cu.in./min. [85 cc/m] @ 85% of crack pressure.
DEFINITION OF CRACK: evident at 0.06 GPM [0.25 LPM]
VALVE HOUSINGS: 2500 PSI [175 Bar] = Aluminum – Anodized.
5000 PSI [350 Bar] = Steel – Unplated.
OPERATING TEMPERATURE: –40° to +250° F. [–40° to +120° C.]
OPERATING MEDIA: All general purpose hydraulic fluids such as MIL–H–5606, SAE–#10, SAE–#20, etc.
INSTALLATION: No restriction.
FILTRATION: 25 microns or better.
SEAL KIT NUMBER: SKN–0827 for buna "N".
SKV–0827 for viton.
WEIGHT: 0.28 lb [.13 kg] cartridge only.
VALVE CAVITY: #C0825, See Page 0–021.0.

BUCHER hydraulics

LOGIC CONTROL ELEMENT
SPOOL TYPE, PILOT TO OPEN, SPOOL "F".

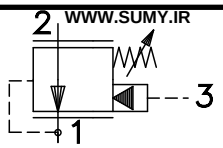

WWW.SUMY.IR

TORQUE:
Steel = 55/60 Ft–Lb. [74/81 Nm]
Aluminum = 35/40 Ft–Lb. [47/54 Nm]

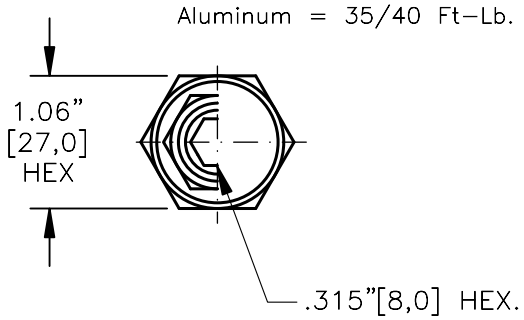

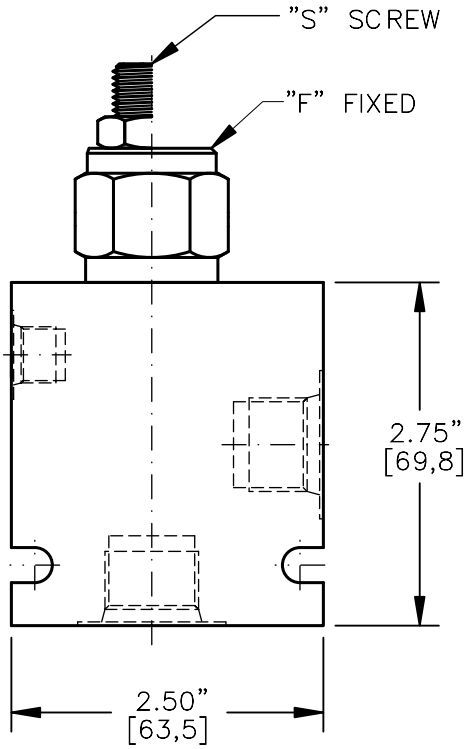

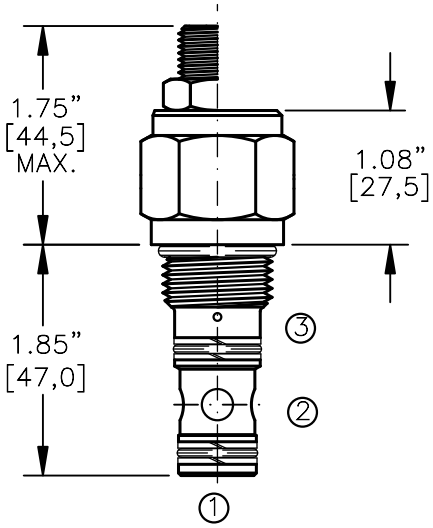

FOR ALUMINUM OR STEEL VALVE HOUSING CONFIGURATIONS SEE PAGE 0–022.1

LCEF–10–X–F–X–X–XXX

BASIC

SIZE
10 = 7/8"–14 UNF

SEALS
N = BUNA "N"
V = VITON

SPOOL
"F"= SPOOL (PILOT TO OPEN)

ADJUSTMENT
F = FIXED (FACTORY SET)
S = ADJUSTING SCREW
C = CAPPED
T = TAMPERPROOF
K = HANDKNOB
M = METAL HANDKNOB

PRESSURE BIAS SPRING
070 = 70 PSI (FIXED)
100 = 100 PSI (FIXED)
160 = 40–160 PSI (ADJ)

PORTS
0 = CARTRIDGE ONLY
03BX = G 3/8" BSPP
04BX = G 1/2" BSPP
08TX = SAE – #8
10TX = SAE – #10

"A" – ALUM. HOUSING
"S" – STEEL HOUSING

FOR ADJUSTMENT CONTROL OPTIONS SEE PAGE 0–050.0

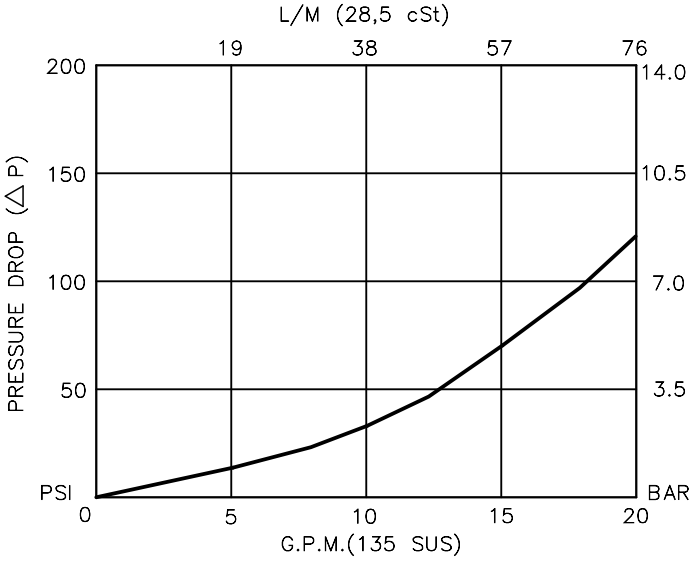

BUCHER hydraulics

WWW.SUMY.IR

LOGIC CONTROL ELEMENT
SPOOL TYPE, PILOT TO OPEN, SPOOL "F".

DESCRIPTION

This unit is a DIRECT ACTING, SCREW IN CARTRIDGE STYLE, SPOOL TYPE, HYDRAULIC DIRECTIONAL LOGIC ELEMENT, with multi-functional potential when used with other directional, pressure or flow control devices.

OPERATIONS

This valve is normally open from port 2 to port 1 with a spring bias. It will shift to allow full flow from port 2 to port 1 only when there is pressure in port 3. Valve will close when port 3 is opened and will maintain the same pressure plus the bias spring force value. When pressure is present at port 3, it will allow flow from port 2 to port 1, it will close once the pressure and the bias spring force is overcome by pressure in port 1. This is pilot to open directional control logic element.

FEATURES AND BENEFITS

Leakproof screw adjustment.
This valve has a fixed or an adjustable bias spring.
Adjustment screw can not be backed out of the valve.
Overset protection – spring can not go solid.
Hardened precision fitted spool & cage provides reliable, long life.
A unibody cage construction provides very low hysteresis and reliable operation.
All external carbon steel parts are plated for longer life against the elements.
Valve is available with fixed, screw, tamperproof, capped and handknob adjustments.
All cartridge valves are 100% functionally tested.
Industry common cavity.

BUCHER hydraulics

WWW.SUMY.IR

LOGIC CONTROL ELEMENT
SPOOL TYPE, PILOT TO OPEN, SPOOL "F".

SPECIFICATIONS

OPERATING PRESSURE: 5,000 PSI [350 Bar]
PROOF PRESSURE: 10,000 PSI [700 Bar]
FLOW: 20.0 GPM [76 L/M] nominal. See performance chart.
INTERNAL LEAKAGE: 5 cu.in./min. [85 cc/m] @ 85% of crack pressure.
DEFINITION OF CRACK: evident at 0.06 GPM [0.25 LPM]
VALVE HOUSINGS: 2500 PSI [175 Bar] = Aluminum – Anodized.
5000 PSI [350 Bar] = Steel – Unplated.
OPERATING TEMPERATURE: –40° to +250° F. [–40° to +120° C.]
OPERATING MEDIA: All general purpose hydraulic fluids such as MIL–H–5606, SAE–#10, SAE–#20, etc.
INSTALLATION: No restriction.
FILTRATION: 25 microns or better.
SEAL KIT NUMBER: SKN–1027 for buna "N".
SKV–1027 for viton.
WEIGHT: 0.46 lb [.21 kg] cartridge only.
VALVE CAVITY: #C1025, See Page 0–022.0.

info.el@bucherhydraulics.com www.bucherhydraulics.com/commoncavity

© 2015 by Bucher Hydraulics, Inc., 2545 Northwest Parkway, Elgin, Illinois 60124, USA
All rights reserved.
Data is provided for the purpose of product description only, and must not be construed as warranted characteristics in the legal sense. The information does not relieve users from the duty of conducting their own evaluations and tests. Because the products are subject to continual improvement, we reserve the right to amend the product specifications contained in this catalogue.

BUCHER hydraulics

LOGIC CONTROL ELEMENT
SPOOL TYPE, PILOT TO OPEN, SPOOL "F".

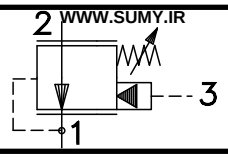

WWW.SUMY.IR

TORQUE:
Steel = 70/75 Ft–Lb. [95/102 Nm]
Aluminum = 55/60 Ft–Lb. [74/81 Nm]

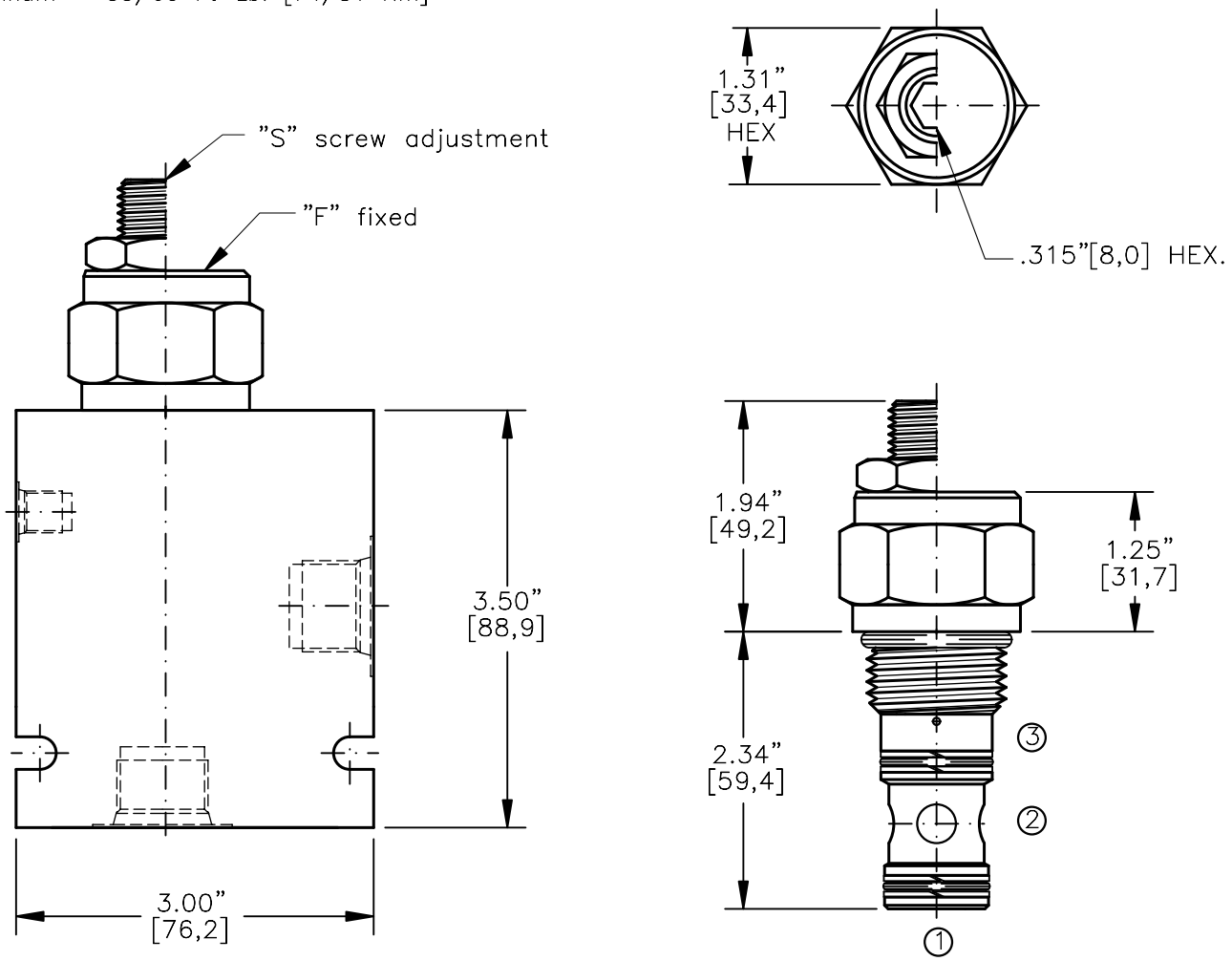

FOR ALUMINUM OR STEEL VALVE HOUSING CONFIGURATIONS SEE PAGE 0–023–1.

LCEF–12–X–F–X–X–XXX

BASIC

SIZE
12 = 1.062"–12 UNF

SEALS
N = BUNA "N"
V = VITON

SPOOL
"F"=SPOOL (PILOT TO OPEN)

ADJUSTMENT
F = FIXED (FACTORY SET)
S = ADJUSTING SCREW
C = CAPPED
T = TAMPERPROOF

PRESSURE BIAS SPRING
070 = 70 PSI (FIXED)
100 = 100 PSI (FIXED)
160 = 40–160 PSI (ADJ)

PORTS
0 = CARTRIDGE ONLY
04BX = G 1/2" BSPP
06BX = G 3/4" BSPP
10TX = SAE – #10
12TX = SAE – #12

"A" – ALUM. HOUSING
"S" – STEEL HOUSING

FOR ADJUSTMENT CONTROL OPTIONS SEE PAGE 0–050.0

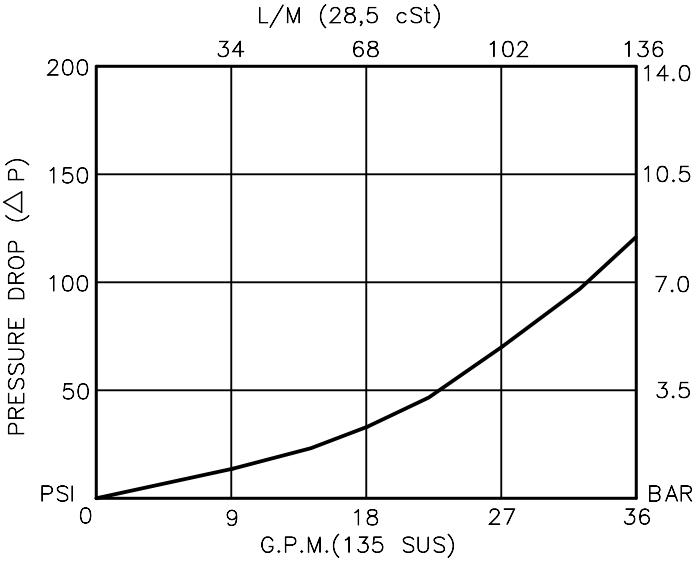

BUCHER hydraulics

WWW.SUMY.IR

LOGIC CONTROL ELEMENT
SPOOL TYPE, PILOT TO OPEN, SPOOL "F".

DESCRIPTION

This unit is a DIRECT ACTING, SCREW IN CARTRIDGE STYLE, SPOOL TYPE, HYDRAULIC DIRECTIONAL LOGIC ELEMENT, with multi-functional potential when used with other directional, pressure or flow control devices.

OPERATIONS

This valve is normally open from port 2 to port 1 with a spring bias. It will shift to allow full flow from port 2 to port 1 only when there is pressure in port 3. Valve will close when port 3 is opened and will maintain the same pressure plus the bias spring force value. When pressure is present at port 3, it will allow flow from port 2 to port 1, it will close once the pressure and the bias spring force is overcome by pressure in port 1. This is pilot to open directional control logic element.

FEATURES AND BENEFITS

Leakproof screw adjustment.
This valve has a fixed or an adjustable bias spring.
Adjustment screw can not be backed out of the valve.
Overset protection – spring can not go solid.
Hardened precision fitted spool & cage provides reliable, long life.
A unibody cage construction provides very low hysteresis and reliable operation.
All external carbon steel parts are plated for longer life against the elements.
Valve is available with fixed, screw, tamperproof and capped adjustments.
All cartridge valves are 100% functionally tested.

BUCHER hydraulics

WWW.SUMY.IR

LOGIC CONTROL ELEMENT
SPOOL TYPE, PILOT TO OPEN, SPOOL "F".

SPECIFICATIONS

OPERATING PRESSURE: 5,000 PSI [350 Bar]
PROOF PRESSURE: 10,000 PSI [700 Bar]
FLOW: 36.0 GPM [136 L/M] nominal. See performance chart.
INTERNAL LEAKAGE: 5 cu.in./min. [85 cc/m] @ 85% of crack pressure.
DEFINITION OF CRACK: evident at 0.06 GPM [0.25 LPM]
VALVE HOUSINGS: 2500 PSI [175 Bar] = Aluminum – Anodized.
5000 PSI [350 Bar] = Steel – Unplated.
OPERATING TEMPERATURE: –40° to +250° F. [–40° to +120° C.]
OPERATING MEDIA: All general purpose hydraulic fluids such as MIL–H–5606, SAE–#10, SAE–#20, etc.
INSTALLATION: No restriction.
FILTRATION: 25 microns or better.
SEAL KIT NUMBER: SKN–1227 for buna "N".
SKV–1227 for viton.
WEIGHT: 0.84 lb [.38 kg] cartridge only.
VALVE CAVITY: #C1225, See Page 0–023.0.

info.el@bucherhydraulics.com www.bucherhydraulics.com/commoncavity

© 2015 by Bucher Hydraulics, Inc., 2545 Northwest Parkway, Elgin, Illinois 60124, USA
All rights reserved.
Data is provided for the purpose of product description only, and must not be construed as warranted characteristics in the legal sense. The information does not relieve users from the duty of conducting their own evaluations and tests. Because the products are subject to continual improvement, we reserve the right to amend the product specifications contained in this catalogue.

BUCHER hydraulics

WWW.SUMY.IR

Pressure valve
Inline Compensator

Q_{max} = 80 l/min, p_{max} = 350 bar
direct acting, spool type, hydraulical operation
Type series: DWDPB-5D-10-...

- Screw-in cartridge valve
- For cavity DD
- All external parts with zinc-nickel plating according to DIN EN ISO 19598
- Installation in threaded port body type DD-12
- External remote-control port with integral damping orifice
- High flow rates
- Excellent stability over the whole pressure and flow range
- Available with hand-knob or tamper-proof cap
- Optionally with damped spool, for use with low load pressures (< 20 bar)

Description

These direct-acting inline pressure-compensator (hydrostat) cartridges, series DWDPB5D10..., are size 10, high performance screw-in valves with an M24×1.5 mounting thread. The main stage is designed on the sliding-spool principle. The range includes a model with an adjustable pressure-compensator spring (5 ... 15 bar) and four models with a fixed compensator spring (1, 4, 6 or 8 bar). Pressure-compensator cartridges maintain the control pressure difference between inlet and outlet pressure for example, across a throttle (an orifice) at a constant level. This means that the flow rate is independent of the load pressure at the actuator. An optional model DWDPUB5D10... with damped spool is available for use in oscillation-susceptible conditions (for example, with load pressure < 20 bar). The adjusting screw or the hand-knob enable the user to carry out system optimization directly on the equipment, without any need to install or replace components that have different flow ranges (e.g. proportional valves). To safeguard valve settings, the adjusting screw can be sealed with a tamperproof cap. All external parts of the valves are zinc-nickel plated and are thus suitable for use in the harshest operating environments. These valves are used in hydraulic circuits in mobile and industrial applications, predominantly in conjunction with a throttle cartridge. For self-assembly, please refer to the section related data sheets.

Symbol

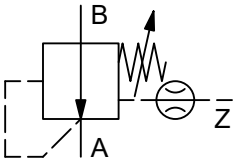

DWDPB-5D-10-...S0515...

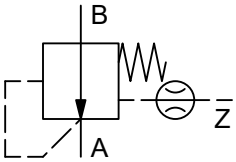

DWDPB-5D-10-F...

Technical data

General characteristics	Description, value, unit
Function group	Pressure valve
Function	Inline Compensator
Design	Screw-in cartridge valve
Controls	hydraulical operation
Characteristic	direct acting, spool type
Construction size	NG 10
Thread size	M24×1,5
Mounting attitude	unrestricted
Weight	0.25 kg
Cavity acc. factory standard	For cavity DD
Tightening torque steel	65 Nm
Tightening torque aluminium	50 Nm
Tightening torque tolerance	± 10 %
Minimum ambient temperature	- 30 °C
Maximum ambient temperature	+ 80 °C
Surface protection	All external parts with zinc-nickel plating according to DIN EN ISO 19598
Sealing material	see ordering code
Seal kit order number	NBR: DS-288-N / FKM: DS-288-V

Hydraulic characteristics	Description, value, unit
Maximum operating pressure	350 bar
Maximum flow rate	80 l/min
Flow direction	see symbol
Hydraulic fluid	HL and HLP mineral oil according to DIN 51 524; other fluids on request!
Minimum fluid temperature	- 30 °C
Maximum fluid temperature	+ 80 °C
Viscosity range	10 ... 650 mm^2/s (cSt)
Recommended viscosity range	15 ... 250 mm^2/s (cSt)
Minimum fluid cleanliness (cleanlineless class according to ISO 4406:1999)	class 20/18/15
Pressure adjustment range	5...15 bar (1 turn ≈ 1.9 bar)

Performance graphs

Q = f (Δp) Flow rate-pressure drop
Adjustable model

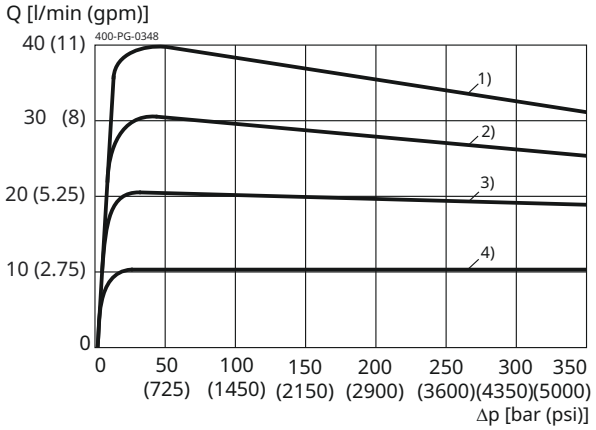

At the minimum compensator setting [5 bar (70 psi)]
1) ~ Ø5...6 mm (.20... .24 in)
2) ~ Ø 4.5...5.5 mm (.18... .22 in)
3) ~ Ø 3.5...4.5 mm (.14... .18 in)
4) ~ Ø 2.5...3.5 mm (.10... .14 in)

Q = f (Δp) Flow rate-pressure drop
Adjustable model

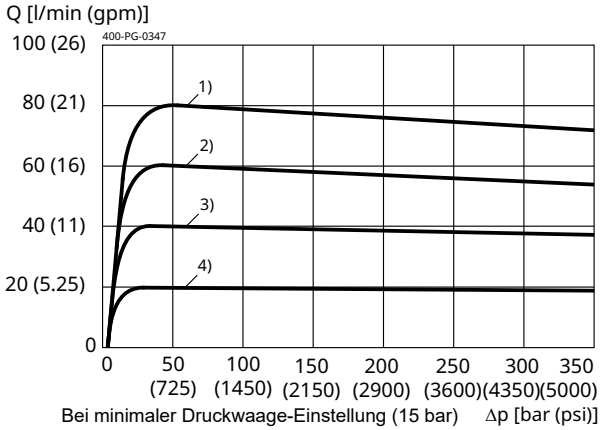

At the minimum compensator setting [15 bar (215)]
1) ~ Ø 5.5...6.5 mm (.22... .26 in)
2) ~ Ø 4.5...5.5 mm (.18... .22 in)
3) ~ Ø 3.5...4.5 mm (.14... .18 in)
4) ~ Ø 2.5...3.5 mm (.10... .14 in)

Δp = f (Q) Pressure drop-flow rate characteristic
Adjustable model

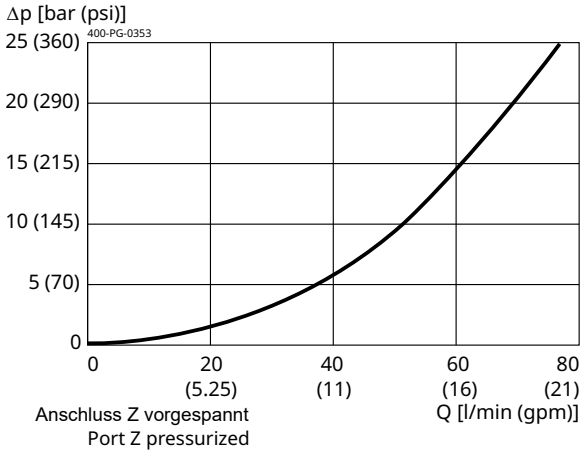

Q = f (Δp) Flow rate-pressure drop
Fixed model

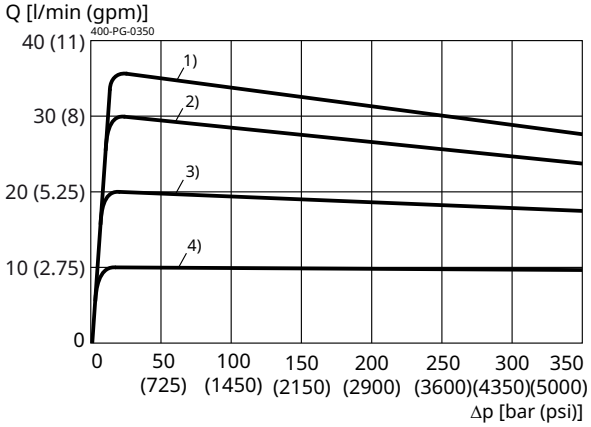

At the fixed compensator setting [4 bar (60 psi)]
1) ~ Ø5...6 mm (.20... .24 in)
2) ~ Ø 4.5...5.5 mm (.18... .22 in)
3) ~ Ø 3.5...4.5 mm (.14... .18 in)
4) ~ Ø 2.5...3.5 mm (.10... .14 in)

BUCHER hydraulics
WWW.SUMY.IR

Q = f (Δp) Flow rate-pressure drop

Fixed model

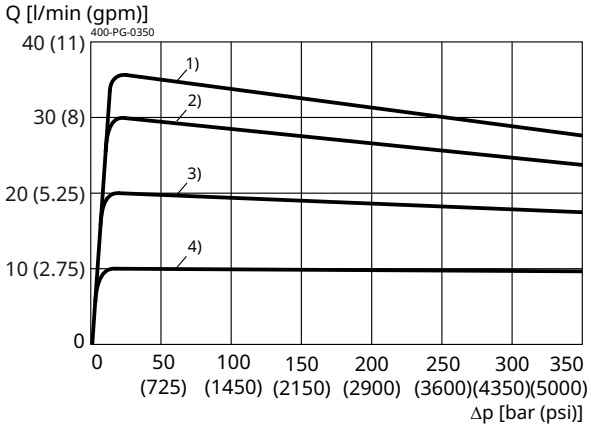

At the fixed compensator setting [4 bar (60 psi)]
1) ~ Ø5...6 mm (.20... .24 in)
2) ~ Ø 4.5...5.5 mm (.18... .22 in)
3) ~ Ø 3.5...4.5 mm (.14... .18 in)
4) ~ Ø 2.5...3.5 mm (.10... .14 in)

Q = f (Δp) Flow rate-pressure drop

Fixed model

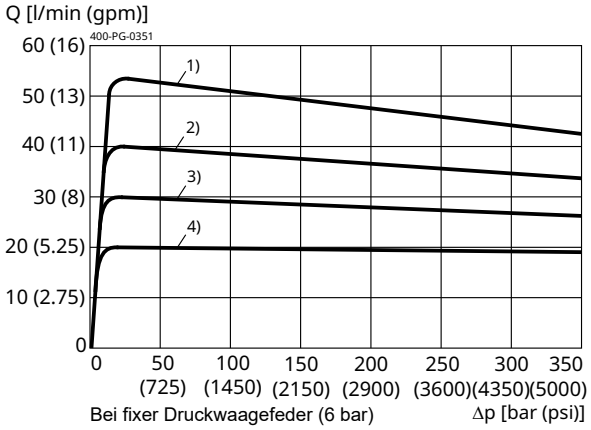

Bei fixer Druckwaagefeder (6 bar)

At the fixed compensator setting [6 bar (85 psi)]
1) ~ Ø 6...7 mm (.24... .28 in)
2) ~ Ø 5...6 mm (.20... .24 in)
3) ~ Ø 4...5 mm (.16... .20 in)
4) ~ Ø 3.5...4.5 mm (.14... .18 in)

Q = f (Δp) Flow rate-pressure drop

Fixed model

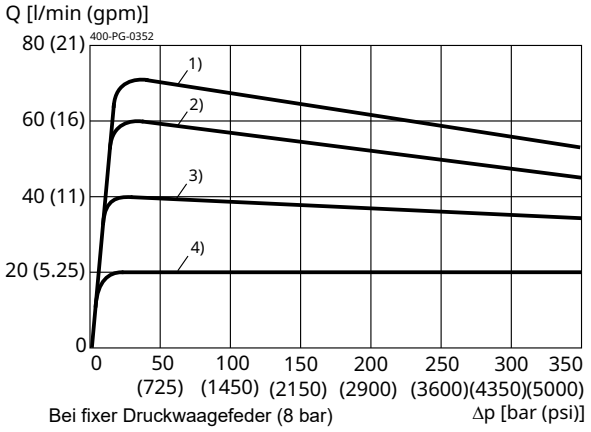

Bei fixer Druckwaagefeder (8 bar)

At the fixed compensator setting [8 bar (115 psi)]
1) ~ Ø 6...7 mm (.24... .28 in)
2) ~ Ø 5.5...6.5 mm (.22... .24 in)
3) ~ Ø 4.5...5.5 mm (.18... .22 in)
4) ~ Ø 3...4 mm (.13... .16 in)

Δp = f (Q) Pressure drop-flow rate characteristic

Fixed model

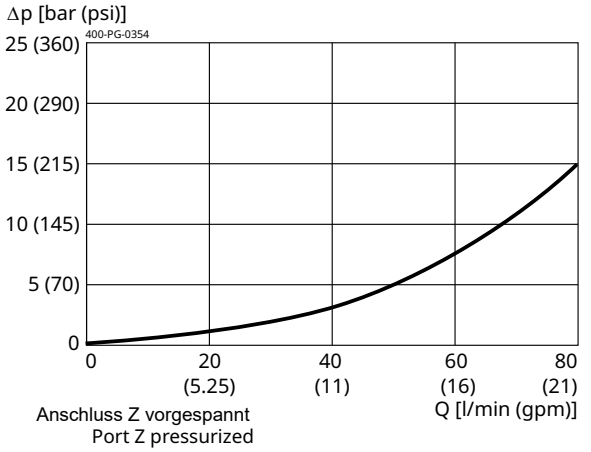

Anschluss Z vorgespannt
Port Z pressurized

Dimensions and sectional view

Beispiel für die Masseinheit: Exampel for the dimensional units:		
0.79	= 0.79 mm	millimeter
(.031)	= 0.031"	inch

Version "S": Einstellschraube mit Innensechskant (Standard)
Version "S": adjustment screw with internal hexagon (standard)

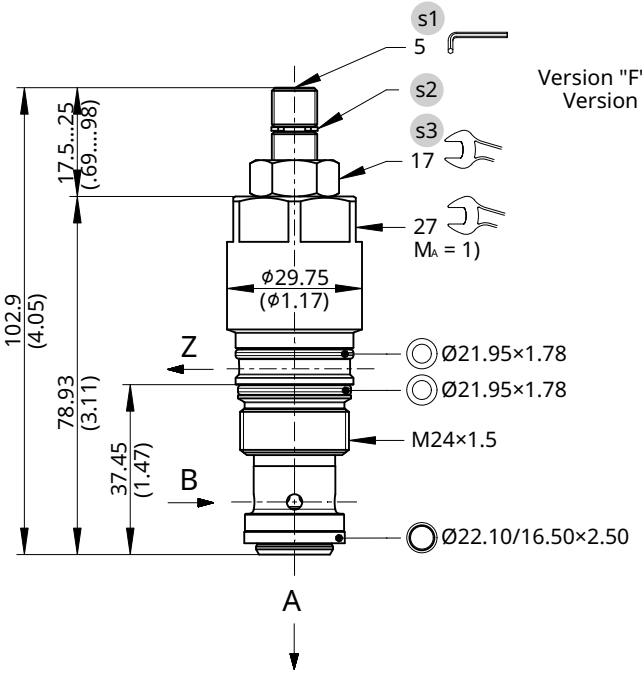

Version "F": Keine Einstellschraube
Version "F": without handknob

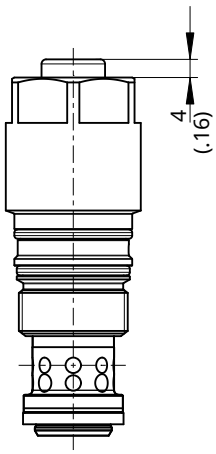

Version "H": Einstellschraube mit Handrad
Version "H": adjustment screw with handknob

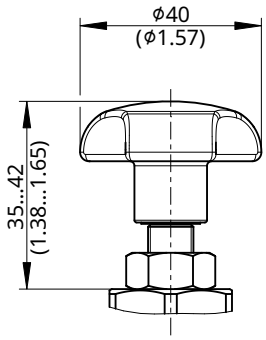

Einstellschraube mit Sicherungskappe
adjustment screw with tamper-proof cap

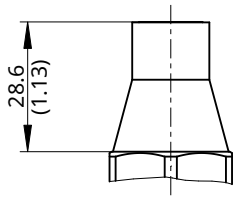

Installation information

NOTE!
1) When fitting the screw-in cartridge valve, use the specified tightening torque. The value can be found in the chapter "Technical data".

NOTE!
Set the required pressure with the adjusting screw s1 . After you have set the valve, lock the adjusting screw s1 with the lock nut.

NOTE!
Valve settings can be sealed by fitting the tamper-proof cap. To fit the cap, the snap ring s2 has to be removed. Subsequent adjustment is only possible by destroying the tamper-proof cap.

NOTE!
The seals are not available individually. The seal kit order number can be found in the chapter "Technical data".

ATTENTION!
Only qualified personnel with mechanical skills may carry out any maintenance work. Generally, the only work that should ever be undertaken is to check, and possibly replace, the seals. When changing seals, oil or grease the new seals thoroughly before fitting them.

Cirquit to Application example

The following diagram shows a typical manifold block for a load-sensing circuit with a pressure/flow-controlled pump. The block uses our direct acting, inline pressure-compen sator cartridges.

In this application all three actuators have to travel together, and it is therefore necessary to provide an inline compensa tor for each station.

The direction and speed of cylinder 1 is determined by the 4/3 proportional directional valve (4/3-PW), which has me ter-in and meter-out throttling.

The inline compensator (IDW1) ensures that there a con stant pressure drop across the proportional directional valve. Since the cylinder is also braked by this proportional directional valve (4/3-PW), the load signal is fed back through a 3/2 solenoid valve (StV) that connects with the re spective cylinder supply line in each situation. The speed of cylinder 2 (Zyl. 2) is independent of the load, and it is determined by the ventable proportional throttle (PD1) and the inline compensator (IDW2).

By placing a proportional pressure-relief valve (ePD) in the remote-control line for the compensator, we create a pro portional 2-way pressure-reducing func-tion. The direction of travel is determined by a 4/2 solenoid valve (4/2-WV) and the deceleration is controlled by the two counterbalance valves.

In the case of cylinder 3 (Zyl. 3), the ventable propor-tional throttle (PD2) and inline compensator (IDW3) ensure that its travel speed is also load-compensated. The electrically operated pressure-relief valve (DV1) enables two different adjustable pressure levels to be set and activated. The two 3/2 directional valves (3/2-WV1 / 3/2-WV2) control the direc tion of travel (and fast-advance, slow speed). The counter balance valve, which is unaffected by back pressure, pre vents the cylinder from overrunning.

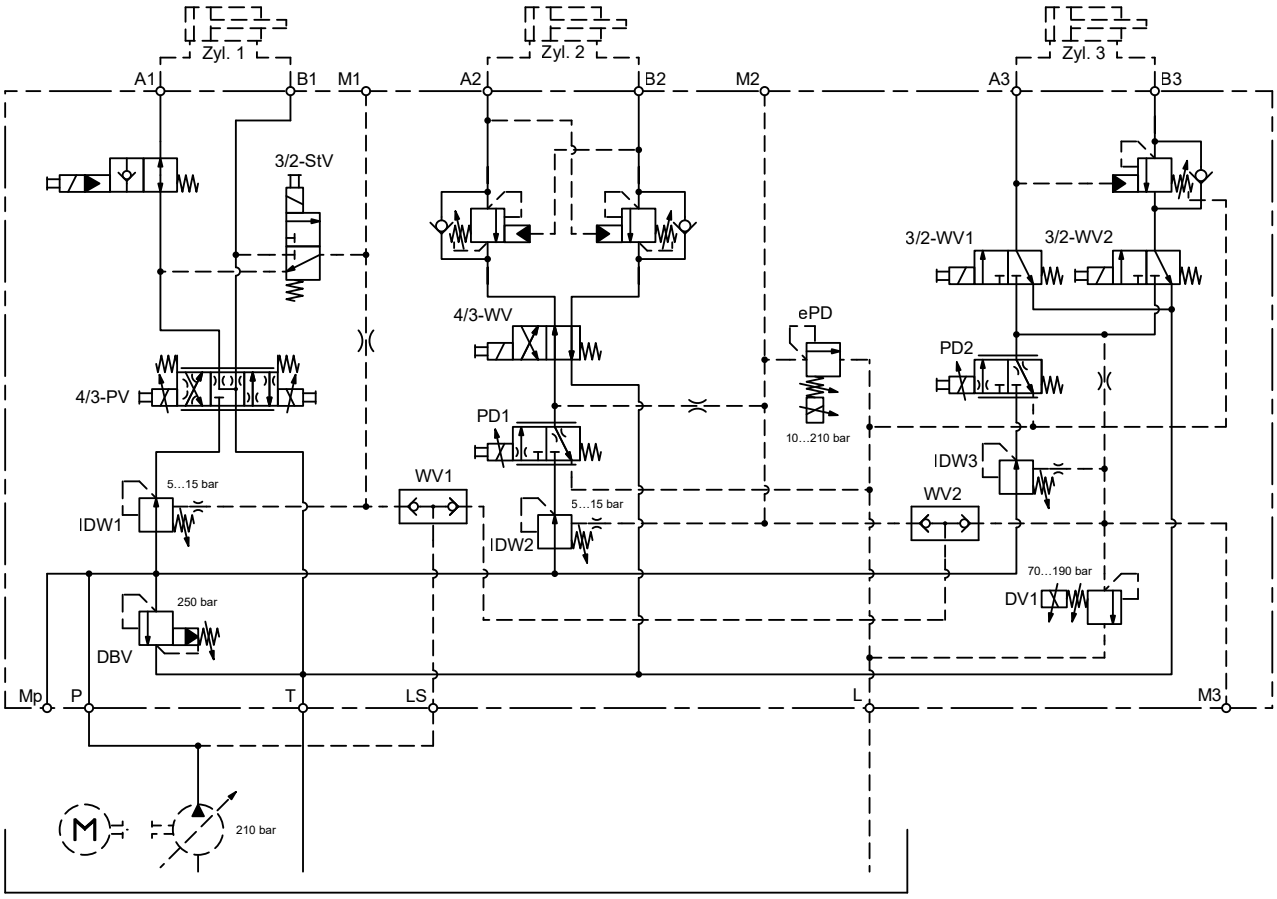

Test setup

Test setup (for flow rate v. load pressure characteristic) 1) Load sensing immediately after orifice2) 2) Throttle function (orifice size, see performance graphs) 3) Bypass pressure-compensator cartridge 4) Actuator port (p_L = load pressure)

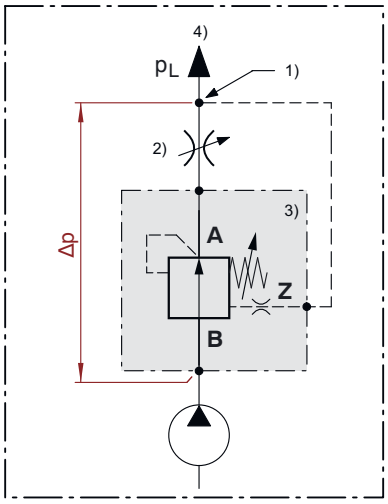

IMPORTANT!
The load-sensing tapping point must be located immediately after the throttle (orifice). Also bear in mind that the pressure drop between the compensator inlet (B) and the throttle outlet (orifice 2) must be as small as possible (short distance between the two components). This gives the best flow rate / load pressure values.

Ordering code

Ex. DW D P U B - 5 D - 10 - S 0515 _ - 1

DW	=	compensator
D	=	direct acting
P	=	cartridge design
(blank)	=	without spool damping **(standard)**
U	=	with spool damping
A ... Q	=	standard model according to valid data sheet
Z ... R	=	special model (on request)
5	=	pressure-reducing with external spring space relief
D	=	cavity type DD
10	=	nominal size 10
S	=	adjustment screw with internal hexagon **(standard)**
H	=	adjustment screw with hand knob
F	=	without adjustment screw - fixed compensator spring
0515	=	adjustable compensator spring (control Δp), steplessly adjustable 5...15 bar / 70...215 psi
01	=	pressure range, fixed compensator spring (control Δp), 1 bar / 15 psi
04	=	pressure range, fixed compensator spring (control Δp), 4 bar / 60 psi
06	=	pressure range, fixed compensator spring (control Δp), 6 bar / 85 psi
08	=	pressure range, fixed compensator spring (control Δp), 8 bar / 115 psi
(blank)	=	NBR (nitril-butadien-rubber / BUNA) seals **(standard)**
V	=	FKM (fluorocarbon rubber / VITON) seals (special seals on request)
1 ... 9	=	technical design no. (omit by ordering)

IMPORTANT!
When required, the tamper-proof cap (the adjustment seal) must be ordered separately in plain language.

Related data sheets

Reference	Description
400-P-040011	Form tools
400-P-060121	Cavity DD
400-P-740112	Threaded port body DDY-12

info.ch@bucherhydraulics.com **www.bucherhydraulics.com**

© 2026 by Bucher Hydraulics AG Frutigen, 3714 Frutigen, Switzerland

All rights reserved.
Data is provided for the purpose of product description only, and must not be construed as warranted characteristics in the legal sense. The information does not relieve users from the duty of conducting their own evaluations and tests. Because the products are subject to continual improvement, we reserve the right to amend the product specifications contained in this catalogue.

Inline Compensator Cartridge, Size 16

Q_{max} = 250 l/min, p_{max} = 420 bar
Direct acting, adjustable compensator spring
Series DWDPA-5B…

- Compensator spring adjustable from 8…16 bar
- External remote-control port 3 with integral damping orifice
- High flow rates
- Very good dynamics
- Excellent stability over the whole pressure and flow range
- Available with hand-knob or tamper-proof cap
- All exposed parts with zinc-nickel plating
- Can be fitted in a line-mounting body

1 Description

These direct-acting inline pressure-compensator (hydrostat) cartridges, series DWDPA-5B…-16…, are size 16, high performance screw-in cartridges with an M42x2 mounting thread. The main stage is designed on the sliding-spool principle, and it can be set between 8…16 bar using the adjustable compensator spring. Inline compensators maintain the control pressure difference between inlet and outlet pressure - for example, across a throttle (an orifice) - at a constant level. This means that the flow rate is independent of the load pressure at the actuator. The adjusting screw or the handwheel enable the user to carry out system optimisation directly on the equipment, without any need to install or replace components that have different flow ranges (e.g. proportional valves). To safeguard valve settings, the adjusting spindle can be sealed with a tamper-proof cap. These screw-in cartridges are used in hydraulic circuits, predominantly in conjunction with a throttle cartridge, to ensure constant travel speed irrespective of variations in load or primary pressure. All external parts of the cartridge are zinc-nickel plated according to DIN EN ISO 19 598 and are thus suitable for use in the harshest operating environments. For self-assembly, please refer to the section related data sheets.

2 Symbol

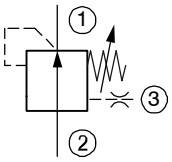

3 Technical data

General characteristics	Description, value, unit
Designation	inline pressure-compensator cartridge
Design	direct acting, adjustable compensator spring, external remote-control port 3 with integral damping orifice
Mounting method	screw-in cartridge M42x2
Tightening torque	200 Nm ± 10 %
Size	nominal size 16, cavity type EB
Weight	0.92 kg
Mounting attitude	unrestricted
Ambient temperature range	-25 °C … +80 °C

WWW.SUMY.IR

Hydraulic characteristics	Description, value, unit
Maximum operating pressure	420 bar
Maximum allowable pressure in port 3	420 bar
Maximum flow rate 2 → 1	250 l/min
Maximum flow rate attainable at the actuator	130 l/min with control Δp of 8 bar 225 l/min with control Δp of 16 bar
Pressure adjustment range	8…16 bar (1 turn ≅ 1.5 bar)
Flow direction	2 → 1, see symbols
Hydraulic fluid	HL and HLP mineral oil to DIN 51 524; for other fluids, please contact BUCHER
Hydraulic fluid temperature range	-25 °C … +80 °C
Viscosity range	10…650 mm^2/s (cSt), recommended 15...250 mm^2/s (cSt)
Minimum fluid cleanliness Cleanliness class to ISO 4406 : 1999	class 20/18/15

4 Performance graphs

measured with oil viscosity 33 mm²/s (cSt) and in a cavity **with an annular groove**

Test setup (for flow rate v. load pressure characteristic)

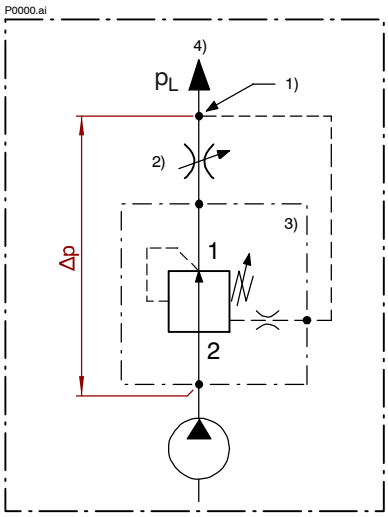

1) Load sensing immediately after orifice 2)
2) Throttle function (orifice size, see performance graphs)
3) Inline pressure-compensator cartridge
4) Actuator port (p_L = load pressure)

IMPORTANT!
The load-sensing tapping point must be located **immediately after** the throttle (orifice). Also bear in mind that the pressure drop between the compensator inlet (2) and the throttle outlet (orifice 2) must be as small as possible (short distance between the two components). This gives the best flow rate / load pressure values.

Q = f (Δp) Flow rate - Pressure drop characteristic
at the minimum compensator setting (8 bar)

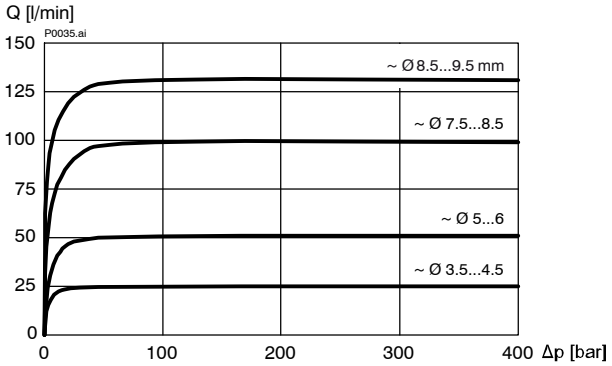

Q = f (Δp) Flow rate - Pressure drop characteristic
at the mid-range compensator setting (12 bar)

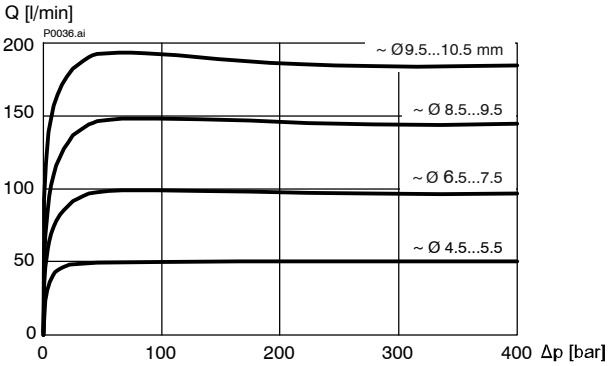

Q = f (Δp) Flow rate - Pressure drop characteristic
at the maximum compensator setting (16 bar)

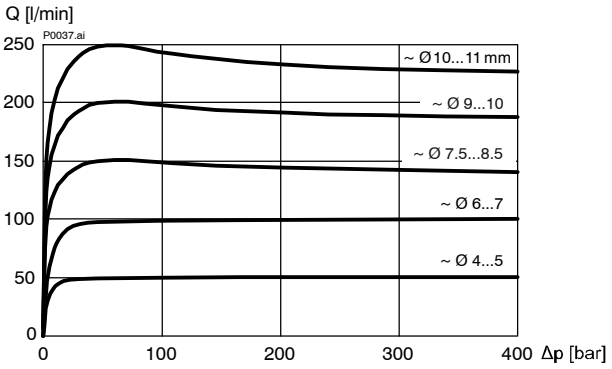

Δp = f (Q) Pressure-drop characteristic (control Δp, 2→1)
(port 3 completely unloaded)

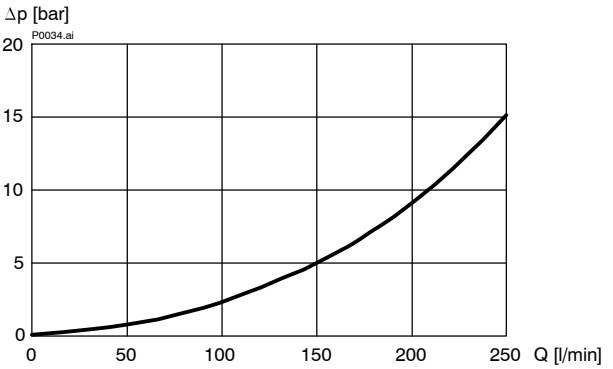

5 Dimensions & sectional view

With adjusting screw “S”

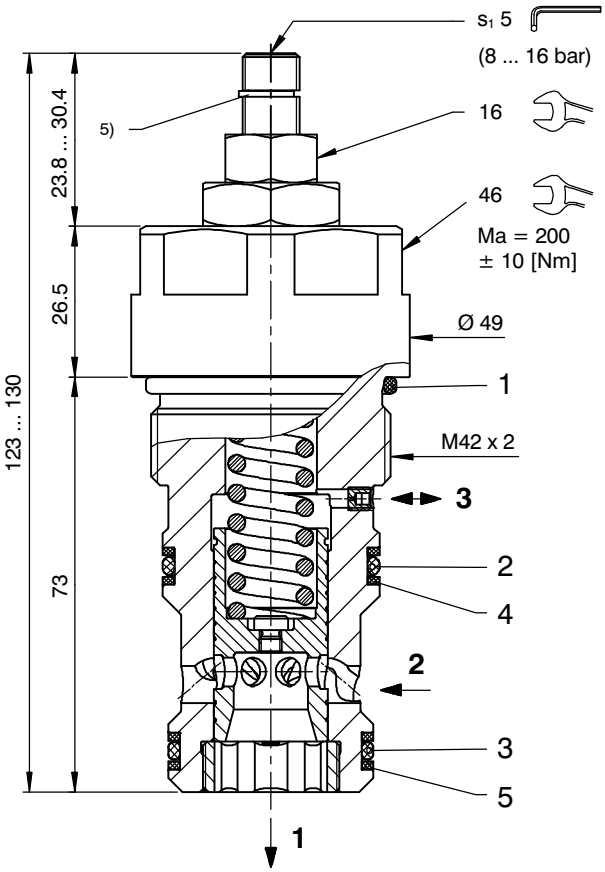

With hand-knob adjuster “H”

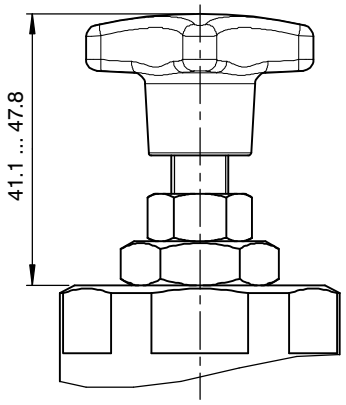

Adjusting screw with tamper-proof cap
(order separately in plain language)

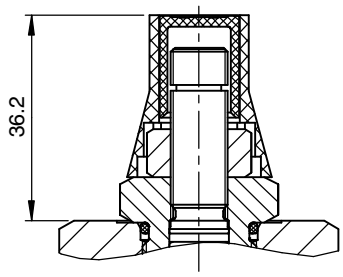

6 Installation information

IMPORTANT!
When fitting the cartridges, use the specified tightening torque. Set the required control Δp (8…16 bar) with the adjusting screw (s_1 5). After you have set the valve, lock the adjusting screw with the lock nut.

ATTENTION!
Only qualified personnel with mechanical skills may carry out any maintenance work. Generally, the only work that should ever be undertaken is to check, and possibly replace, the seals. When changing seals, oil or grease the new seals thoroughly before fitting them.

IMPORTANT!
Valve settings can be sealed by fitting the tamper-proof cap. To fit the cap, the snap ring [5] has to be removed. Subsequent adjustment is only possible by destroying the tamper-proof cap.

Seal kit NBR no. DS-359-N [6]

Item	Qty.	Description			
1	1	O-ring	no. 129	∅ 39,34 x 2,62	N90
2	1	O-ring	no. 125	∅ 32,99 x 2,62	N90
3	1	O-ring	no. 124	∅ 31,42 x 2,62	N90
4	2	Backup ring		∅ 32,00 x 2,00 x 1,40 FI0751	
5	2	Backup ring		∅ 30,00 x 2,00 x 1,40 FI0751	

IMPORTANT!
[6] Seal kit with FKM (Viton) seals, no. DS-359-V

7 Application examples

The following diagram shows a typical manifold block for a load-sensing circuit with a pressure/flow-controlled pump. The block uses our direct acting, inline pressure-compensator cartridges.

In this application all three actuators have to travel together, and it is therefore necessary to provide an inline compensator for each station.

The direction and speed of cylinder 1 is determined by the 4/3 proportional directional valve (4/3-PW), which has meter-in and meter-out throttling.

The inline compensator (IDW1) ensures that there a constant pressure drop across the proportional directional valve. Since the cylinder is also braked by this proportional directional valve (4/3-PW), the load signal is fed back through a 3/2 solenoid valve (StV) that connects with the respective cylinder supply line in each situation.

The speed of cylinder 2 (Zyl. 2) is independent of the load, and it is determined by the ventable proportional throttle (PD1) and the inline compensator (IDW2).

By placing a proportional pressure-relief valve (ePD) in the remote-control line for the compensator, we create a proportional 2-way pressure-reducing function. The direction of travel is determined by a 4/2 solenoid valve (4/2-WV) and the deceleration is controlled by the two counterbalance valves.

In the case of cylinder 3 (Zyl. 3), the ventable proportional throttle (PD2) and inline compensator (IDW3) ensure that its travel speed is also load-compensated. The electrically operated pressure-relief valve (DV1) enables two different adjustable pressure levels to be set and activated. The two 3/2 directional valves (3/2-WV1 / 3/2-WV2) control the direction of travel (and fast-advance, slow speed). The counterbalance valve, which is unaffected by back pressure, prevents the cylinder from overrunning.

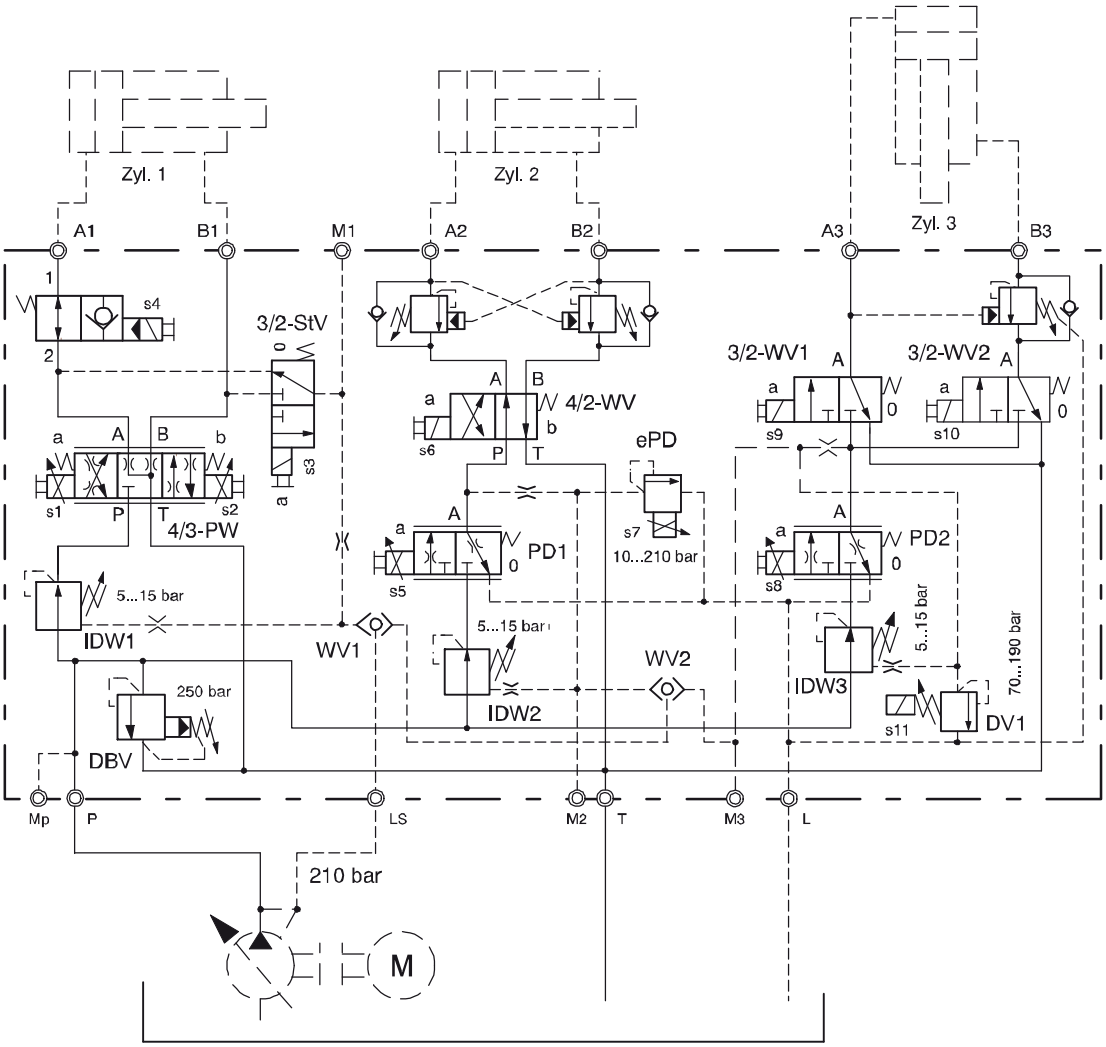

8 Ordering code

Ex. DW D P A - 5 B - 16 - S 0816 _ - 1

DW	=	compensator
D	=	direct acting
P	=	cartridge design
A ... Q	=	standard model - see relevant data sheets
Z ... R	=	special features - please consult BUCHER
5	=	pressure function 5 (with external remote-control port 3)
B	=	cavity type EB
16	=	nominal size 16
S	=	screw adjuster (**standard**)
H	=	hand-knob adjuster
0816	=	adjustable compensator spring (control Δp), steplessly adjustable 8…16 bar
(blank)	=	NBR (Nitrile) seals (**standard**)
V	=	FKM (Viton) seals (special seals - please contact BUCHER)
1 ... 9	=	design stage (omit when ordering new units)

IMPORTANT!
When required, the tamper-proof cap (the adjustment seal) must be ordered separately in plain language.

9 Related data sheets

Reference	(Old no.)	Description
400-P-040011	(i-32)	The form-tool hire programme
400-P-080111	(i-55.2)	Cavity type EB to ISO 7789-42-06-0-07
400-P-750115	(G-29.22)	Line-mounting body, type GEBAA (G 1”)

info.ch@bucherhydraulics.com www.bucherhydraulics.com

© 2022 by Bucher Hydraulics AG Frutigen, CH-3714 Frutigen
All rights reserved.
Data is provided for the purpose of product description only, and must not be construed as warranted characteristics in the legal sense. The information does not relieve users from the duty of conducting their own evaluations and tests. Because the products are subject to continual improvement, we reserve the right to amend the product specifications contained in this catalogue.

Classification: 430.305.320.305.330.355

BUCHER hydraulics

WWW.SUMY.IR

Pressure valve
Bypass compensator

Q_{max} = 140 l/min, p_{max} = 350 bar
Direct acting, spool type, hydraulical operation
Type series: DWDPB-2D-10-...

- Screw-in cartridge valve for cavity DD
- All external parts with zinc-nickel plating according to DIN EN ISO 19598
- Installation in threaded port body type DD-12
- External remote-control port with integral damping orifice
- High flow rates
- Excellent stability over the whole pressure and flow range
- Available with hand-knob or tamper-proof cap
- With spoollocking option to allow application with variable or fixeddisplacement pumps

Symbol

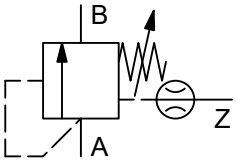

DWDPB-2D-10-...S0715...

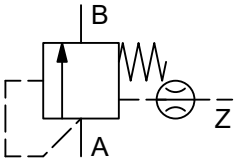

DWDPB-2D-10-...F...

Description

These direct-acting bypass pressure-compensator (hydrostat) cartridges, series DWDPB-2D...-10..., are size 10, high performance screw-in valves with an M24×1.5 mounting thread. The main stage is designed on the sliding-spool principle. The range includes a model with an adjustable pressure-compensator spring (7 ... 15 bar) and six models with a fixed compensator spring (3, 5, 8, 10, 12 or 15 bar). In addition, a model with a lockable spool is available as an option. This enables the valve to be used in load-sensing systems with either variable displacement pumps (closed center) or fixed-displacement pumps (open center). Pressure-compensator cartridges maintain the control pressure difference between inlet and outlet pressure - for example, across a throttle (an orifice) - at a constant level. This means that the flow rate is independent of the load pressure at the actuator. The adjusting screw or the hand-knob enable the user to carry out system optimization directly on the equipment, without any need to install or replace components that have different flow ranges (e.g. proportional valves). To safeguard valve settings, the adjusting screw can be sealed with a tamper-proof cap. By fitting external pilot controls (pressure-relief valves or 2/2 unloading valves) in the line to the port Z, additional functions such as pressure relief or vented bypass from A to B can be produced.

WWW.SUMY.IR

All external parts of the cartridges are zinc-nickel plated and are thus suitable for use in the harshest operating environments. These screw-in valves are used in hydraulic circuits in mobile and industrial applications, predominantly in conjunction with a throttle cartridge. For self-assembly, please refer to the section related data sheets.

Technical data

General characteristics	Description, value, unit
Function group	pressure valve
Function	bypass compensator
Design	screw-in cartridge valve
Controls	hydraulical operation
Characteristic	direct acting, spool type
Construction size	NG 10
Thread size	M24×1,5
Mounting attitude	unrestricted
Weight	0.25 kg
Cavity acc. factory standard	DD
Tightening torque steel	65 Nm
Tightening torque aluminium	50 Nm
Tightening torque tolerance	± 10 %
Minimum ambient temperature	- 30 °C
Maximum ambient temperature	+ 80 °C
Surface protection	all external parts with zinc-nickel plating according to DIN EN ISO 19598
Sealing material	see ordering code
Seal kit order number	NBR: DS-288-N / FKM: DS-288-V

Hydraulic characteristics	Description, value, unit
Maximum operating pressure	350 bar
Maximum flow rate	140 l/min
Flow direction	see symbol
Hydraulic fluid	HL and HLP mineral oil according to DIN 51 524; other fluids on request!
Minimum fluid temperature	- 30 °C
Maximum fluid temperature	+ 80 °C
Viscosity range	10 ... 650 mm^2/s (cSt)
Recommended viscosity range	15 ... 250 mm^2/s (cSt)
Minimum fluid cleanliness (cleanlineless class according to ISO 4406:1999)	class 20/18/15
Pressure adjustment range	7...15bar (1 turn ≈ 1,2bar)

Performance graphs

measured with oil viscosity 33.0 mm²/s (cSt)

p = f (l) Pressure adjustment

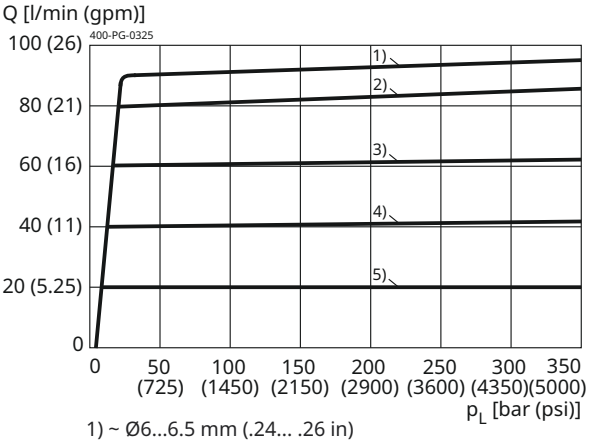

1) ~ Ø6...6.5 mm (.24... .26 in)
2) ~ Ø5.5...6 mm (.22... .24 in)
3) ~ Ø4.5...5.5 mm (.18... .22 in)
4) ~ Ø3.5...4.5 mm (.14... .18 in)
5) ~ Ø2.5...3.5 mm (.10... .14 in)
at the minimum compensator setting [7 bar (100 psi)]

p = f (l) Pressure adjustment

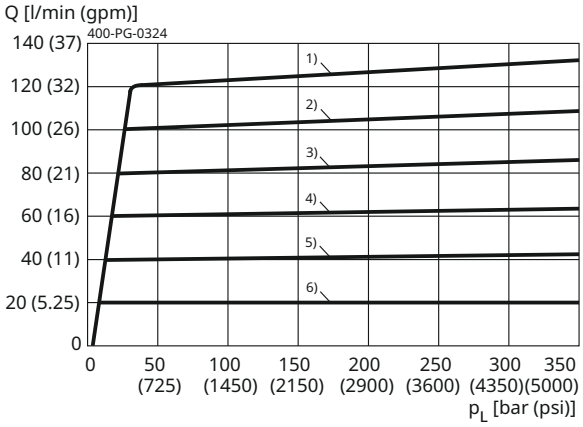

1) ~ Ø 8.5...9.5 mm (.33... .37 in)
2) ~ Ø 7.5...8.5 mm (.30... .33 in)
3) ~ Ø 6.5...7.5 mm (.26... .30 in)
4) ~ Ø 5.5...6.5 mm (.22... .26 in)
5) ~ Ø 4.5...5.5 mm (.18... .22 in)
6) ~ Ø 3...4 mm (.13... .16 in)

at the maximum compensator setting [15 bar (215 psi)]

p = f (Q) Pressure-flow rate

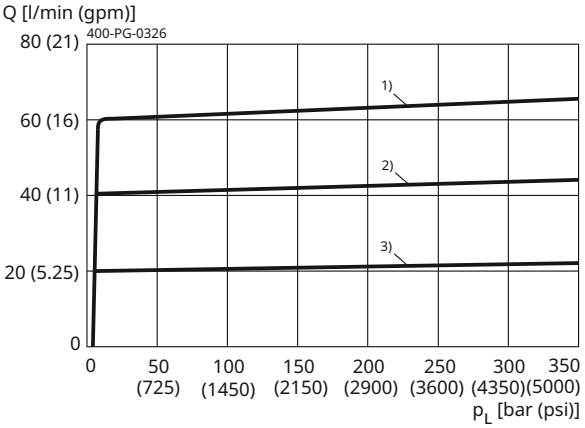

1) ~ Ø7.5...8.5 mm (.30... .33 in)
2) ~ Ø6...7 mm (.24... .28 in)
3) ~ Ø4...5 mm (.16... .20 in)
at the fixed compensator setting [3 bar (45 psi)]

p = f (Q) Pressure-flow rate

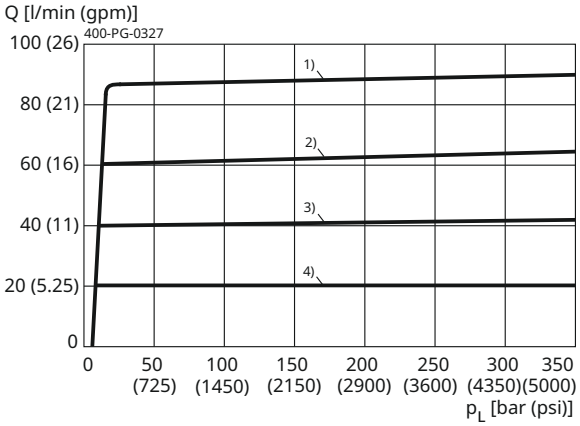

1) ~ Ø 8...9 mm (.31... .35 in)
2) ~ Ø 6.5...7.5 mm (.26... .30 in)
3) ~ Ø 5...6 mm (.20... .24 in)
4) ~ Ø 3.5...4.5 mm (.14... .18 in)

at the fixed compensator setting [5 bar (70 psi)]

WWW.SUMY.IR

p = f (Q) Pressure-flow rate

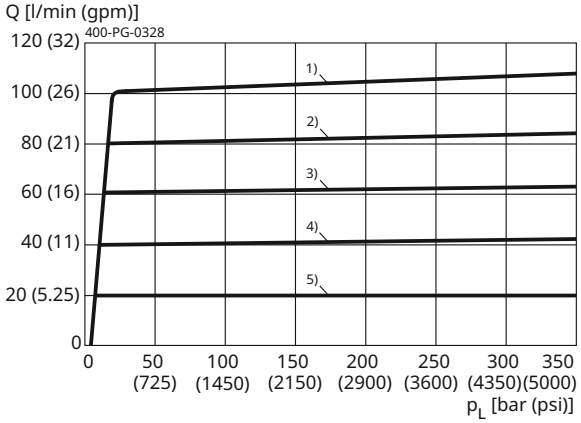

1) ~ Ø 7.5...8.5 mm (.30... .33 in)
2) ~ Ø 6.5...7.5 mm (.26... .30 in)
3) ~ Ø 5.5...6.5 mm (.22... .26 in)
4) ~ Ø 4.5...5.5 mm (.18... .22 in)
5) ~ Ø 3...4 mm (.13... .16 in)

at the fixed compensator setting [8 bar (115 psi)]

p = f (Q) Pressure-flow rate

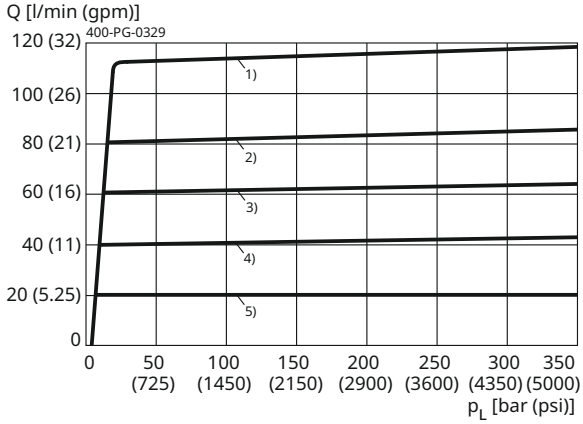

1) ~ Ø 7.5...8.5 mm (.30... .33 in)
2) ~ Ø 6...7 mm (.24... .28 in)
3) ~ Ø 5...6 mm (.20... .24 in)
4) ~ Ø 4...5 mm (.16... .20 in)
5) ~ Ø 3...4 mm (.13... .16 in)

at the fixed compensator setting [10 bar (145 psi)]

p = f (Q) Pressure-flow rate

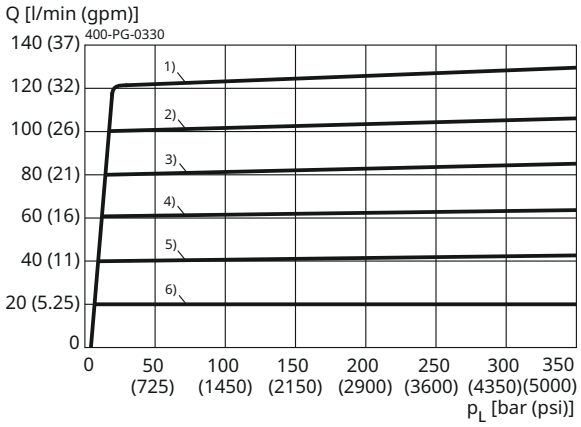

1) ~ Ø 7.5...8.5 mm (.30... .33 in)
2) ~ Ø 6.5...7.5 mm (.26... .30 in)
3) ~ Ø 6...7 mm (.24... .28 in)
4) ~ Ø 5...6 mm (.20... .24 in)
5) ~ Ø 4...5 mm (.16... .20 in)
6) ~ Ø 2.5...3.5 mm (.10... .14 in)

at the fixed compensator setting [12 bar (175 psi)]

p = f (Q) Pressure-flow rate

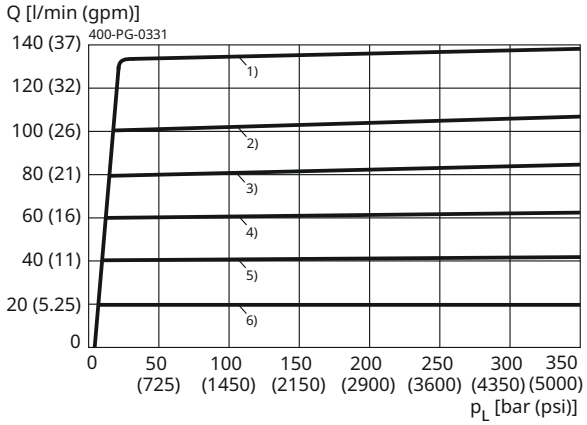

1) ~ Ø 7.5...8.5 mm (.30… .33 in)
2) ~ Ø 6.5...7.5 mm (.26… .30 in)
3) ~ Ø 5.5...6.5 mm (.24… .28 in)
4) ~ Ø 5...6 mm (.20… .24 in)
5) ~ Ø 4...5 mm (.16… .20 in)
6) ~ Ø 2.5...3.5 mm (.10… .14 in)

at the fixed compensator setting [15 bar (215 psi)]

Δp = f (Q) Pressure drop-flow rate characteristic

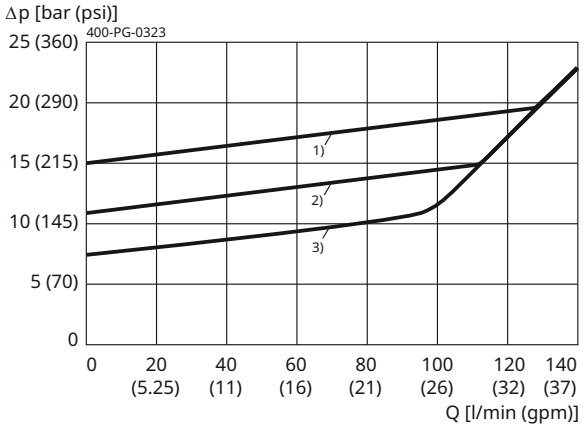

port Z completely unloaded
1) 15 bar (215 psi) control Δp setting (maximum value)
2) 11 bar (160 psi) control Δp setting (maximum value)
3) 7 bar (100 psi) control Δp setting (maximum value)

Δp = f (Q) Pressure drop-flow rate characteristic

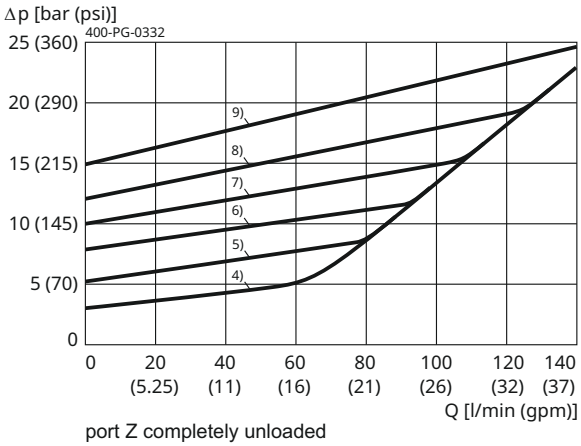

port Z completely unloaded
4) 3 bar (45 psi) control Δp fix
5) 5 bar (70 psi) control Δp fix
6) 8 bar (115 psi) control Δp fix
7) 10 bar (145 psi) control Δp fix
8) 12 bar (175 psi) control Δp fix
9) 15 bar (215 psi) control Δp fix

Installation

Beispiel für die Masseinheit:
Exampel for the dimensional units:

0.79 = 0.79 mm millimeter
(.031) = 0.031" inch

Version "S": Einstellschraube mit Innensechskant (Standard)
Version "S": adjustment screw with internal hexagon (standard)

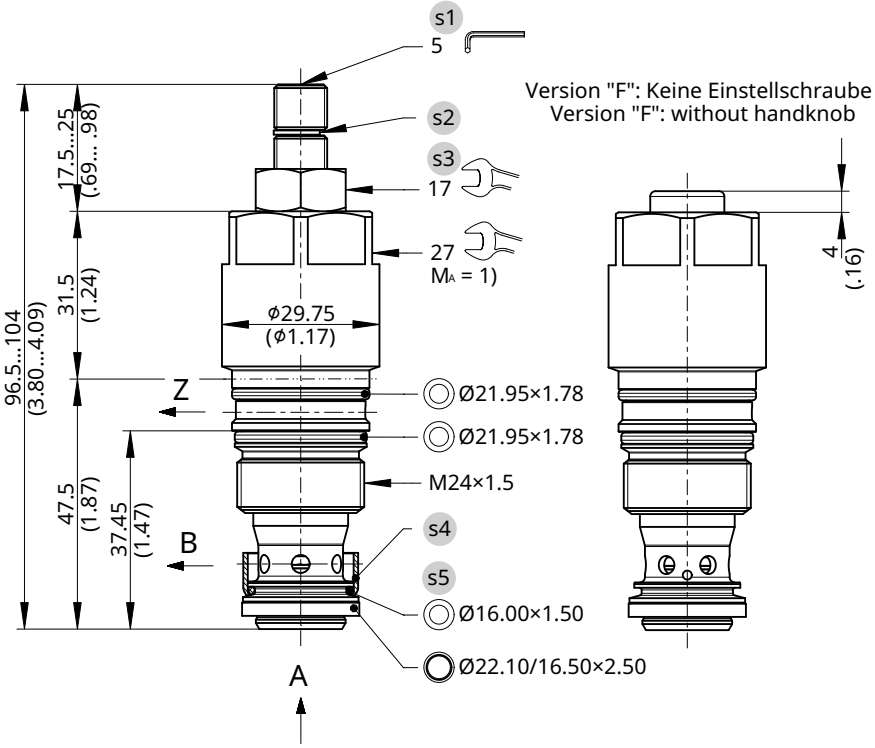

Version "F": Keine Einstellschraube
Version "F": without handknob

Version "H": Einstellschraube mit Handrad
Version "H": adjustment screw with handknob

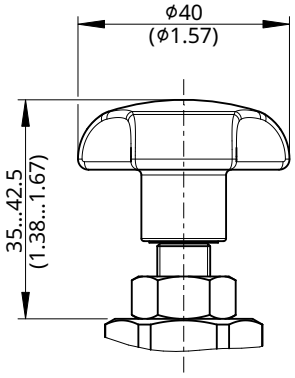

Einstellschraube mit Sicherungskappe
adjustment screw with tamper-proof cap

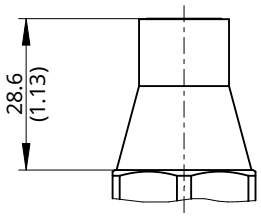

NOTE!
1) When fitting the screw-in cartridge valve, use the specified tightening torque. The value can be found in the chapter "Technical data".

NOTE!
Set the required pressure with the adjusting screw s1 . After you have set the valve, lock the adjusting screw s1 with the lock nut.

NOTE!
Valve settings can be sealed by fitting the tamper-proof cap. To fit the cap, the snap ring s2 has to be removed. Subsequent adjustment is only possible by destroying the tamper-proof cap.

NOTE!
The seals are not available individually. The seal kit order number can be found in the chapter "Technical data".

NOTE!
For installation in an aluminium housing, we recommend using the “S” version. This is equipped with a steel ring s4 and plastic ring s5 to protect the housing from possible damage.

ATTENTION!
Only qualified personnel with mechanical skills may carry out any maintenance work. Generally, the only work that should ever be undertaken is to check, and possibly replace, the seals. When changing seals, oil or grease the new seals thoroughly before fitting them.

Test setup

Test setup (for flow rate v. load pressure characteristic)

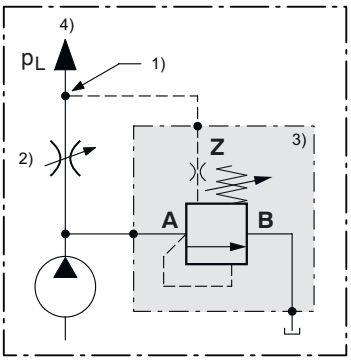

1. Load sensing immediately after orifice
2. Throttle function (orifice size, see performance graphs)
3. Bypass pressure-compensator cartridge
4. Actuator port (p_L = load pressure)

IMPORTANT!
The load sensing and compensator inlet (port A) tapping points must be located immediately after the throttle (orifice) and before it respectively. This minimises the pressure drop and gives the best flow rate / load pressure values.

IMPORTANT!
All characteristics were recorded with a surplus flow of 10...15 l/min. (2.75...4 gpm)

Option: spool locking (with hand-knob)

In a loadsensing system, the optional model featuring spool locking can be changed over to allow operation with either a fixeddisplacement pump (open center) or a variabledisplacement pump (closed center) For use with variabledisplacement pumps, the spindle is screwed in fully This locks the spool and closes the connection from A to B.

IMPORTANT!
Carry out the changeover only when the valve is unpressurized.

Application examples

The following diagram shows a typical manifold block that uses our direct acting, bypass pressure-compensator cartridges.

Because the port can be pressurized by the returning oil, priority and series circuits can be constructed.

If the direct acting bypass compensator (BDWD1) does not receive a load signal from the shuttle valve (WV), it forwards the oil flow to the next actuator with a pressure drop that, at its maximum, is equal to the control Δp hat has been set or the fixed compensator spring rating that was chosen. If the 4/3 proportional directional valve (4/3-PW) is now operated, the inline compensator (IDW) ensures load-independent travel at a speed that is determined by the 4/3 proportional directional valve.

A maximum pressure can be set with the proportional pressure-relief pilot valve (ePD). The direct acting bypass compensator (BDWD1) ensures that the 4/3 proportional directional valve (4/3-PW) is supplied with the oil flow rate that it requires, regardless of the other actuators.

The surplus flow is made available to the other actuators. If the ventable proportional throttles (PD1 and PD2) are not operated, the flow is routed to tank through the bypass compensators (BDWD2 and BDWD3).

If the proportional throttles (PD1 and/or PD2) are activated, the hydraulic motors (Motor 1 and/or Motor 2) rotate at speeds that are independent of their loads. The speed is determined by the respective proportional throttle. The direction of rotation of Motor 1 can be reversed by operating the 4/2 directional valve (4/2-WV). The hydraulic motors (Motor 1 and Motor 2) work in a series mode in which either or both can be switched on, and their speeds can be set individually at any required level and will be independent of load.

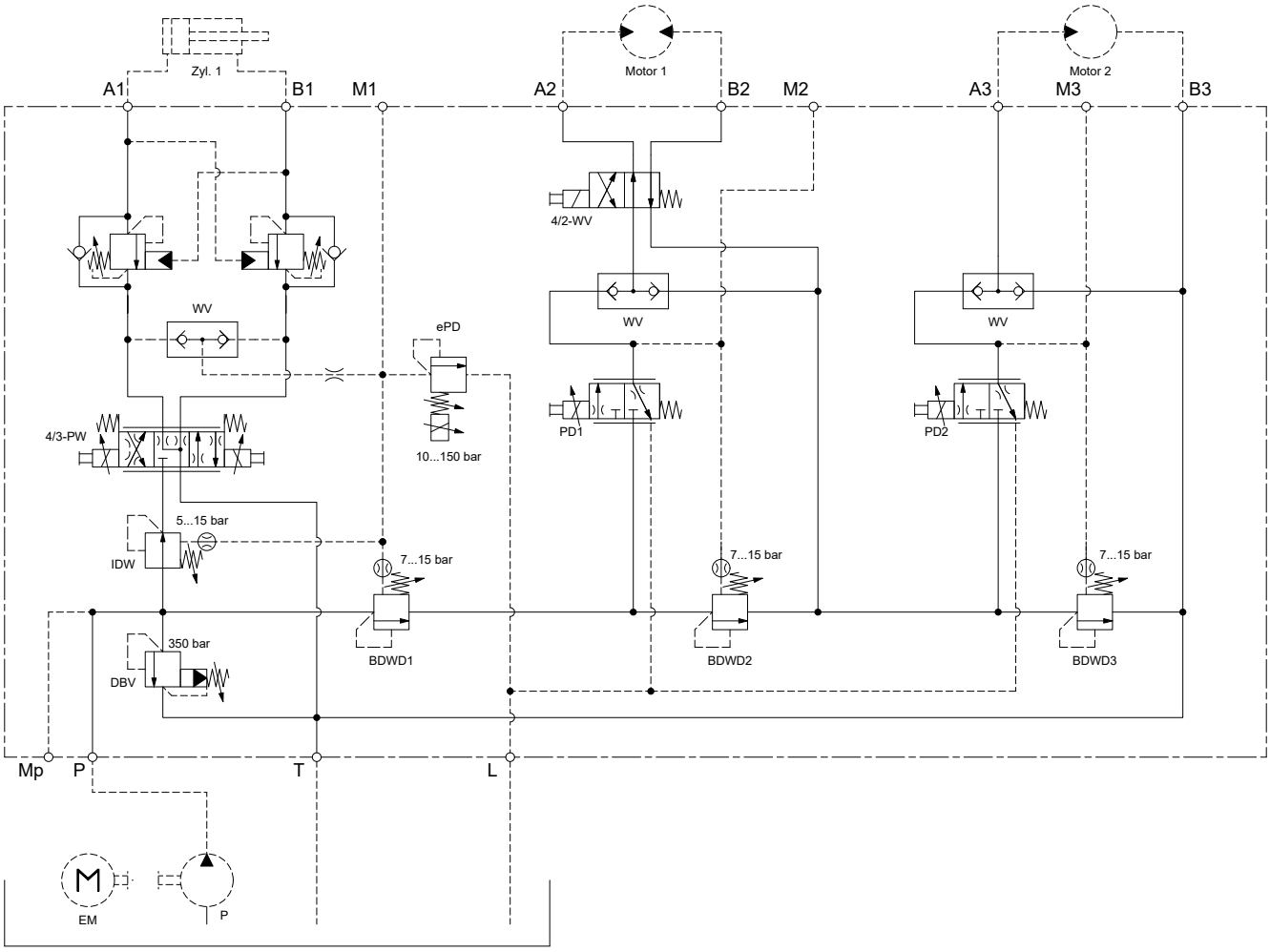

Ordering code

Ex. DW D P B _ - 2 D - 10 - S 0715 N - 1

DW	=	compensator
D	=	direct acting
P	=	cartridge design
A ... Q	=	standard model according to valid data sheet
Z ... R	=	special model (on request)
(blank)	=	without steel ring
S	=	with steel ring (to protect the housing)
2	=	pressure function 2, with remote control oil connection
D	=	cavity type DD
10	=	nominal size 10
S	=	adjustment screw with internal hexagon **(standard)**
H	=	adjustment screw with hand knob
F	=	adjustment, fixed pressure balance spring
HA*	=	adjustment screw with hand knob, piston lockable
0715	=	continuously adjustable pressure balance spring (control-Δp), 7...15 bar / 100...215 psi
03	=	fixed pressure balance spring (control-Δp), 3 bar / 45 psi
05	=	fixed pressure balance spring (control-Δp), 5 bar / 70 psi
08	=	fixed pressure balance spring (control-Δp), 8 bar / 115 psi
10	=	fixed pressure balance spring (control-Δp), 10 bar / 145 psi
12	=	fixed pressure balance spring (control-Δp), 12 bar / 175 psi
15	=	fixed pressure balance spring (control-Δp), 15 bar / 215 psi
N	=	NBR (nitril-butadien-rubber / BUNA) seals **(standard)**
V	=	FKM (fluorocarbon rubber / VITON) seals (special seals on request)
1 ... 9	=	technical design no. (omit by ordering)

IMPORTANT!
When required, the tamper-proof cap (the adjustment seal) must be ordered separately in plain language.

* = Piston locking with handwheel for optional use with variable displacement or fixed displacement pump
Only available in combination with fixed pressure balance spring 10 bar or 12 bar.

Related data sheets

Reference	Description
400-P-040011	form tools
400-P-060121	cavity DD
400-P-740112	threaded port body DDY-12

info.ch@bucherhydraulics.com **www.bucherhydraulics.com**

© 2026 by Bucher Hydraulics AG Frutigen, 3714 Frutigen, Switzerland

All rights reserved.
Data is provided for the purpose of product description only, and must not be construed as warranted characteristics in the legal sense. The information does not relieve users from the duty of conducting their own evaluations and tests. Because the products are subject to continual improvement, we reserve the right to amend the product specifications contained in this catalogue.

Bypass Compensator Cartridge, Size 16

Q_{max} = 350 l/min, p_{max} = 420 bar
Direct acting, adjustable compensator spring
Series DWDPA-2B…

- Compensator spring adjustable from 5…13 bar
- External remote-control port 3 with integral damping orifice
- High flow rates
- Excellent stability over the whole pressure and flow range
- Available with hand-knob or tamper-proof cap
- All exposed parts with zinc-nickel plating
- Can be fitted in a line-mounting body

1 Description

These direct-acting bypass pressure-compensator (hydrostat) cartridges, series DWDPA-2B…-16…, are size 16, high performance screw-in cartridges with an M42x2 mounting thread. The main stage is designed on the sliding-spool principle, and it can be set between 5…13 bar using the adjustable compensator spring. Pressure-compensator cartridges maintain the control pressure difference between inlet and outlet pressure - for example, across a throttle (an orifice) - at a constant level. This means that the flow rate is independent of the load pressure at the actuator. The adjusting screw or the hand-knob enable the user to carry out system optimisation directly on the equipment, without any need to install or replace components that have different flow ranges (e.g. proportional valves). To safeguard valve settings, the adjusting screw can be sealed with a tamper-proof cap. By fitting external pilot controls (pressure-relief valves or 2/2 unloading valves) in the line to the port 3, additional functions such as pressure relief or vented bypass from 1 → 2 can be produced. These screw-in cartridges are used in hydraulic circuits in mobile and industrial applications, predominantly in conjunction with a throttle cartridge. All external parts of the cartridge are zinc-nickel plated according to DIN EN ISO 19 598 and are thus suitable for use in the harshest operating environments. For self-assembly, please refer to the section related data sheets.

2 Symbol

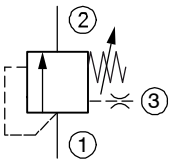

3 Technical data

General characteristics	Description, value, unit
Designation	bypass pressure-compensator cartridge
Design	direct acting, adjustable compensator spring, external remote-control port 3 with integral damping orifice
Mounting method	screw-in cartridge M42x2
Tightening torque	200 Nm ± 10 %
Size	nominal size 16, cavity type EB to ISO 7789-42-06-0-07
Weight	0.92 kg
Mounting attitude	unrestricted
Ambient temperature range	-25 °C … +80 °C

WWW.SUMY.IR

Hydraulic characteristics	Description, value, unit
Maximum operating pressure	420 bar
Maximum allowable pressure in port 3	420 bar
Maximum flow rate 1 → 2	350 l/min
Maximum flow rate attainable at the actuator	210 l/min with control Δp of 5 bar 315 l/min with control Δp of 13 bar
Pressure adjustment range	5…13 bar (1 turn ≅ 1.2 bar)
Flow direction	1 → 2, see symbols
Hydraulic fluid	HL and HLP mineral oil to DIN 51 524; for other fluids, please contact BUCHER
Hydraulic fluid temperature range	-25 °C … +80 °C
Viscosity range	10…650 mm^2/s (cSt), recommended 15...250 mm^2/s (cSt)
Minimum fluid cleanliness Cleanliness class to ISO 4406 : 1999	class 20/18/15

4 Performance graphs

measured with oil viscosity 33 mm²/s (cSt) and in a cavity **with an annular groove**

Test setup (for flow rate v. load pressure characteristic)

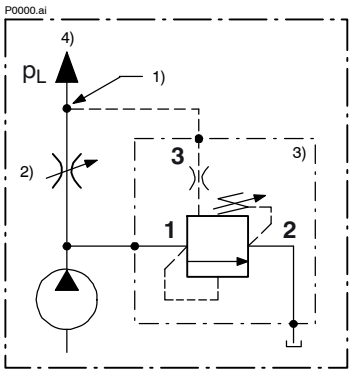

1) Load sensing immediately after orifice 2)
2) Throttle function (orifice size, see performance graphs)
3) Bypass pressure-compensator cartridge
4) Actuator port (p_L = load pressure)

IMPORTANT!
The load sensing and compensator inlet (port 1) tapping points must be located **immediately after the throttle (orifice) and before it** respectively. This minimises the pressure drop and gives the best flow rate / load pressure values.

IMPORTANT!
All characteristics were recorded with a **surplus flow of 10…15 l/min**.

$Q = f(p_L)$ Flow rate v. load pressure characteristic
at the minimum compensator setting (5 bar)

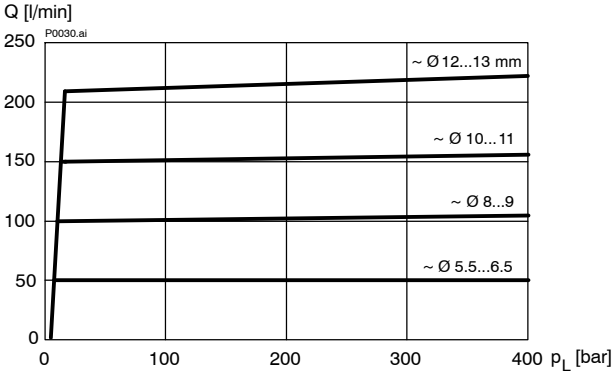

$Q = f(p_L)$ Flow rate v. load pressure characteristic
at the maximum compensator setting (13 bar)

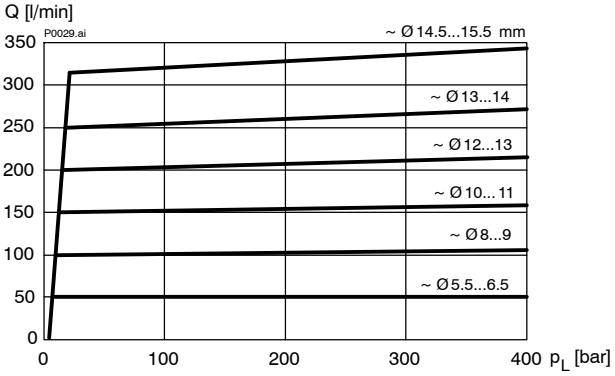

$\Delta p = f(Q)$ Pressure-drop characteristic (control Δp, 1→2)
(port 3 completely unloaded)

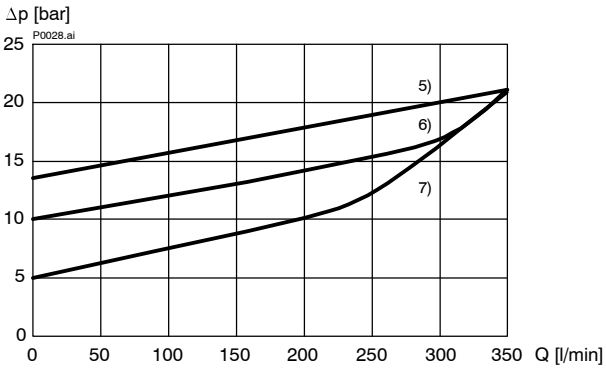

5) 13 bar control Δp setting (maximum value)
6) 10 bar control Δp setting (mid-range value)
7) 5 bar control Δp setting (minimum value)

5 Dimensions & sectional view

With adjusting screw “S"

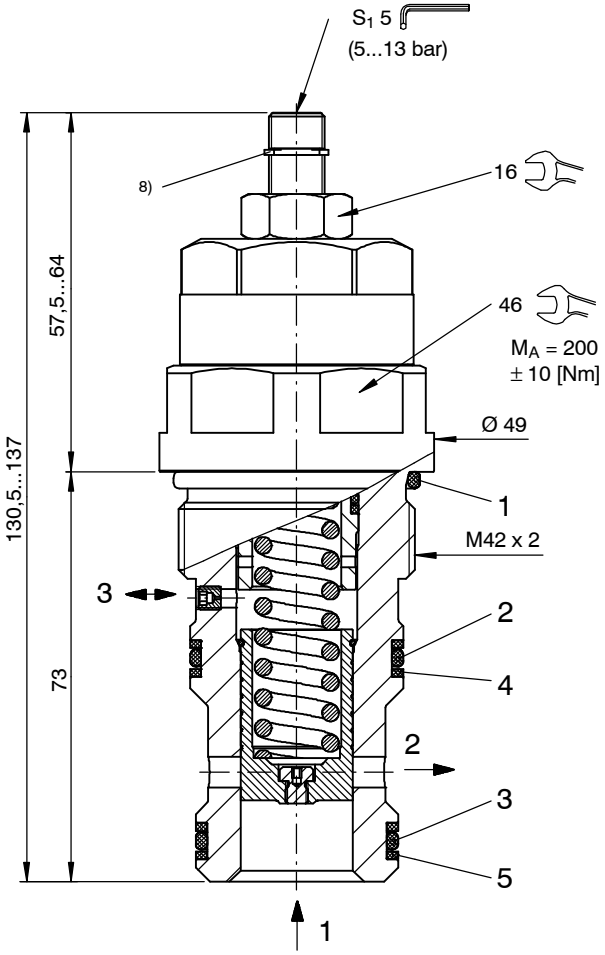

With hand-knob adjuster “H"

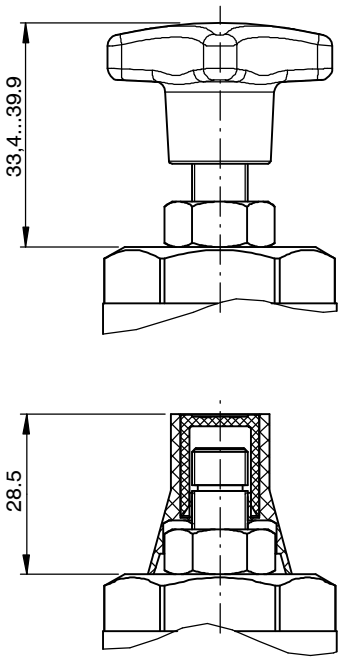

Adjusting screw with tamper-proof cap
(order separately in plain language)

6 Installation information

IMPORTANT!
When fitting the cartridges, use the specified tightening torque. Set the required control Δp (5…13 bar) with the adjusting screw (s_1 5). After you have set the valve, lock the adjusting screw with the lock nut.

ATTENTION!
Only qualified personnel with mechanical skills may carry out any maintenance work. Generally, the only work that should ever be undertaken is to check, and possibly replace, the seals. When changing seals, oil or grease the new seals thoroughly before fitting them.

IMPORTANT!
Valve settings can be sealed by fitting the tamper-proof cap. To fit the cap, the snap ring 8) has to be removed. Subsequent adjustment is only possible by destroying the tamper-proof cap.

Seal kit NBR no. DS-359-N 9)

Item	Qty.	Description
1	1	O-ring no. 129 ∅ 39,34 x 2,62 N90
2	1	O-ring no. 125 ∅ 32,99 x 2,62 N90
3	1	O-ring no. 124 ∅ 31,42 x 2,62 N90
4	2	Backup ring ∅ 32,00 x 2,00 x 1,40 FI0751
5	2	Backup ring ∅ 30,00 x 2,00 x 1,40 FI0751

IMPORTANT!
9) Seal kit with FKM (Viton) seals, no. DS-359-V

7 Application examples

The following diagram shows a typical manifold block that uses our direct acting, bypass pressure-compensator cartridges. Because the port can be pressurised by the returning oil, priority and series circuits can be constructed. If the direct acting bypass compensator (BDWD1) does not receive a load signal from the shuttle valve (WV), it forwards the oil flow to the next actuator with a pressure drop that, at its maximum, is equal to the control Δp (5…13 bar) that has been set.
If the 4/3 proportional directional valve (4/3-PW) is now operated, the inline compensator (IDW) ensures load-independent travel at a speed that is determined by the 4/3 proportional directional valve. A maximum pressure can be set with the proportional pressure-relief pilot valve (ePD). The direct acting bypass compensator (BDWD1) ensures that the 4/3 proportional directional valve (4/3-PW) is supplied with the oil flow rate that it requires, regardless of the other actuators. The surplus flow is made available to the other actuators. If the ventable proportional throttles (PD1 and PD2) are not operated, the flow is routed to tank through the bypass compensators (BDWD2 and BDWD3). If the proportional throttles (PD1 and/or PD2) are activated, the hydraulic motors (Motor 1 and/or Motor 2) rotate at speeds that are independent of their loads. The speed is determined by the respective proportional throttle. The direction of rotation of Motor 1 can be reversed by operating the 4/2 directional valve (4/2-WV). The hydraulic motors (Motor 1 and Motor 2) work in a series mode in which either or both can be switched on, and their speeds can be set individually at any required level and will be independent of load.

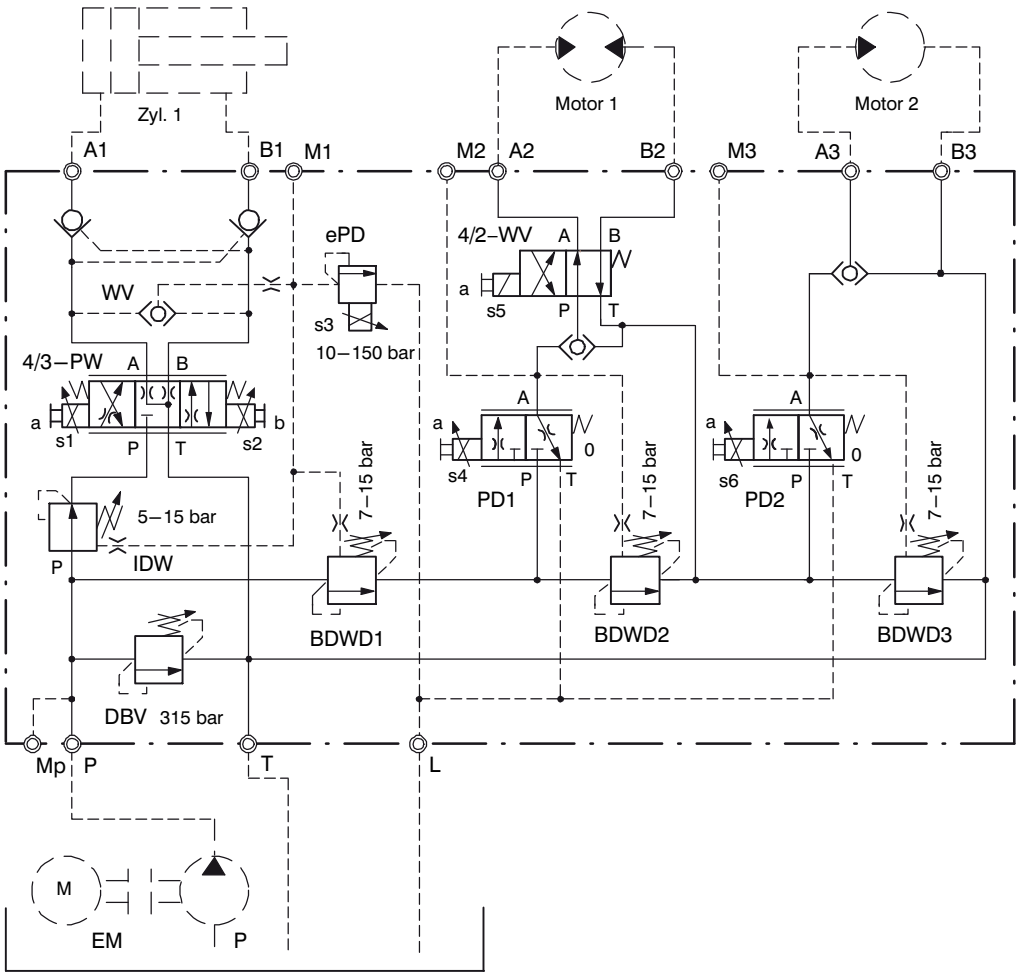

8 Ordering code

Ex. DW D P A - 2 B - 16 - S 0513 _ - 1

DW	=	compensator
D	=	direct acting
P	=	cartridge design
A ... Q	=	standard model - see relevant data sheets
Z ... R	=	special features - please consult BUCHER
2	=	pressure function 2 (with external remote-control port 3)
B	=	cavity type EB
16	=	nominal size 16
S	=	screw adjuster (**standard**)
H	=	hand-knob adjuster
0513	=	adjustable compensator spring (control Δp), steplessly adjustable 5…13 bar
(blank)	=	NBR (Nitrile) seals (**standard**)
V	=	FKM (Viton) seals (special seals - please contact BUCHER)
1 ... 9	=	design stage (omit when ordering new units)

IMPORTANT!
When required, the tamper-proof cap (the adjustment seal) must be ordered separately in plain language.

9 Related data sheets

Reference	(Old no.)	Description
400-P-040011	(i-32)	The form-tool hire programme
400-P-080111	(i-55.2)	Cavity type EB to ISO 7789-42-06-0-07
400-P-750115	(G-29.22)	Line-mounting body, type GEBAA (G 1")

info.ch@bucherhydraulics.com www.bucherhydraulics.com

© 2022 by Bucher Hydraulics AG Frutigen, CH-3714 Frutigen
All rights reserved.
Data is provided for the purpose of product description only, and must not be construed as warranted characteristics in the legal sense. The information does not relieve users from the duty of conducting their own evaluations and tests. Because the products are subject to continual improvement, we reserve the right to amend the product specifications contained in this catalogue.

Classification: 430.305.320.305.330.355

WWW.SUMY.IR

Pressure valve
Compensator function

Q_{max} = 140 l/min, p_{max} = 350 bar
Pilot operated, spool type, hydraulical operation
Type series: DWVP_-2D-10-...

- Screw-in cartridge valve for cavity DD
- All external parts with zinc-nickel plating according to DIN EN ISO 19598
- Installation in threaded port body type DD-12
- With integral pressure-relief function
- Available with 5 bar or 8 bar pressure balance spring
- High flow rates
- Excellent stability over the whole pressure and flow range
- External remote-control port with integral damping orifice
- With internal pilot-oil drain to B
- Available with hand-knob or tamper-proof cap

Symbol

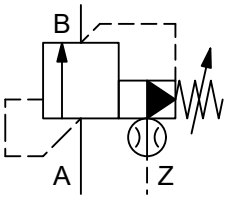

Description

These two-stage pressure valves, series DWVP_-2-10..., are size 10, crew-in cartridge valves with a seated pilot stage and an M24x1.5 mounting thread. They are designed on the proven sliding-spool principle. Due to the fixed compensator-spring setting, the control pressure difference between inlet and outlet pressure in hydraulic circuits - for example, across a throttle (an orifice) - is maintained at a constant level. This means that the flow rate is independent of the load pressure at the actuator. The spring chamber is internally drained to the secondary connection. The secondary connection should be preferably drained to the tank without pressure. These valves are mainly used in mobile and stationary applications where pressureless circulation is desired. The setting is by means of an adjusting spindle. All external parts of the screw-in valves are zinc-nickel plated and are thus suitable for use in the harshest operating environments. For installation and further information, please refer to the section related data sheets.

Technical data

General characteristics	Description, value, unit
Function group	pressure valve
Function	compensator function
Design	screw-in cartridge valve
Controls	hydraulical operation
Characteristic	pilot operated, spool type
Construction size	NG 10
Thread size	M24×1,5
Mounting attitude	unrestricted
Weight	0.25 kg
Cavity acc. factory standard	DD
Tightening torque steel	65 Nm
Tightening torque aluminium	50 Nm
Tightening torque tolerance	± 10 %
Minimum ambient temperature	- 30 °C
Maximum ambient temperature	+ 80 °C
Surface protection	all external parts with zinc-nickel plating according to DIN EN ISO 19598
Sealing material	see ordering code
Seal kit order number	NBR: DS-216-N / FKM: DS-216-V

Hydraulic characteristics	Description, value, unit
Maximum operating pressure	350 bar
Maximum flow rate	140 l/min
Flow direction	see symbol
Hydraulic fluid	HL and HLP mineral oil according to DIN 51 524; other fluids on request!
Minimum fluid temperature	- 30 °C
Maximum fluid temperature	+ 80 °C
Viscosity range	10 ... 650 mm^2/s (cSt)
Recommended viscosity range	15 ... 250 mm^2/s (cSt)
Minimum fluid cleanliness (cleanlineless class according to ISO 4406:1999)	class 20/18/15
Opening pressure	pressure range L = 10 ... 65 barnpressure range M = 10 ... 210 bar pressure range N = 10 ... 350 bar

Performance graphs

measured with oil viscosity 33.0 mm²/s (cSt)

Q = f (pl) Flow rate load-pressure

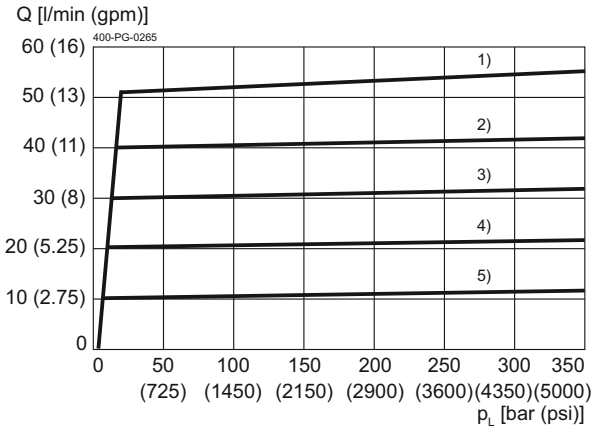

Throttle- / Orifice diameters [mm]

	Throttle / orifice diameters [mm]	
Graph	Δp = 5 bar	Δp = 8 bar
1)		∅ 5.5…6.0
2)	∅ 5.5…6.0	∅ 5.0…5.5
3)	∅ 4.5…5.0	∅ 4.0…4.5
4)	∅ 4.0…4.5	∅ 3.5…4.0
5)	∅ 3.5…4.0	∅ 2.5…3.0

Δp = f (Q) Pressure drop-flow rate characteristic

port Z completely unloaded

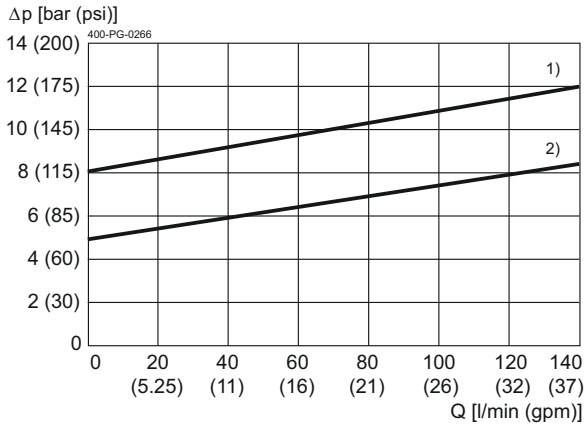

1) 8 bar control Δp (fixed)
2) 5 bar control Δp (fixed)

Q = f (pl) Pressure cut-off– load-pressure

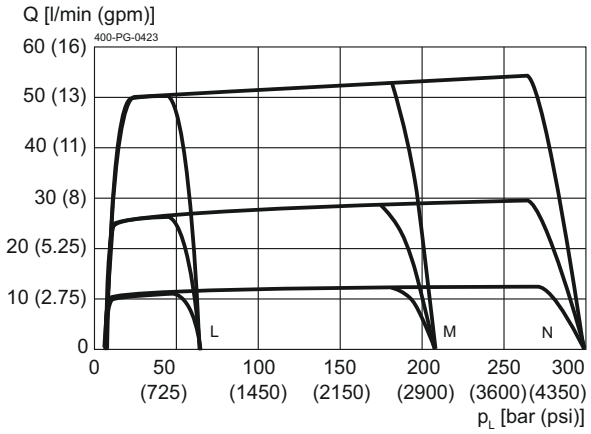

Installation

Beispiel für die Masseinheit:
Exampel for the dimensional units:

0.79	= 0.79 mm	millimeter
(.031)	= 0.031"	inch

Version "S": Einstellschraube mit Innensechskant (Standard)
Version "S": adjustment screw with internal hexagon (standard)

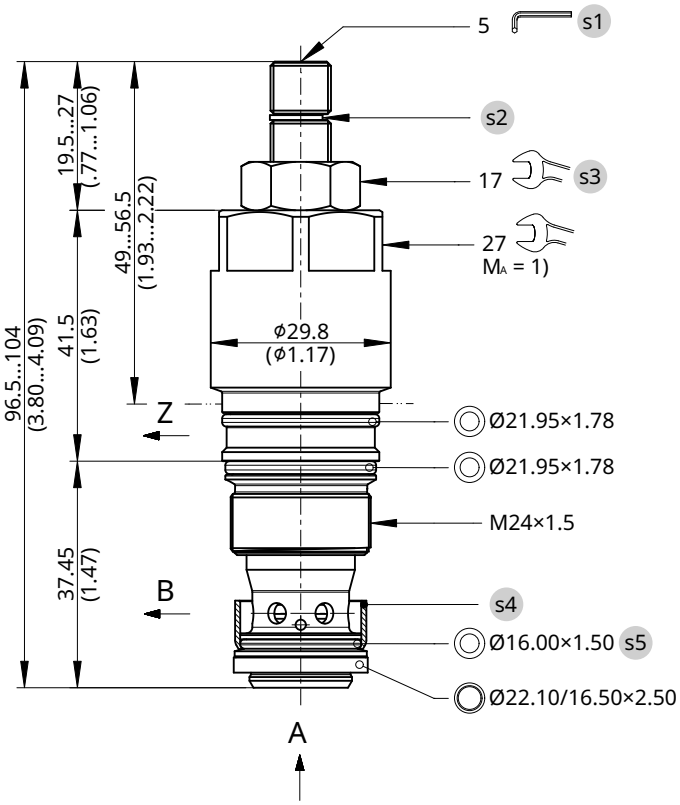

Version "H": Einstellschraube mit Handrad
Version "H": adjustment screw with handknob

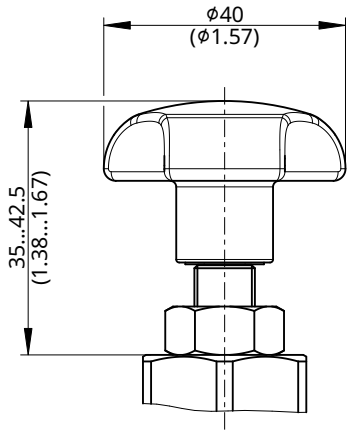

Einstellschraube mit Sicherungskappe
adjustment screw with tamper-proof cap

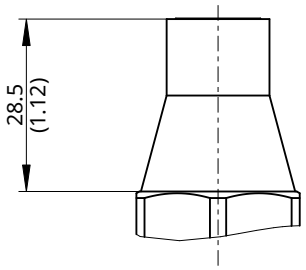

NOTE!
1) When fitting the screw-in cartridge valve, use the specified tightening torque. The value can be found in the chapter "Technical data".

NOTE!
Set the required pressure with the adjusting screw s1 . After you have set the valve, lock the adjusting screw s1 with the lock nut.

NOTE!
Valve settings can be sealed by fitting the tamper-proof cap. To fit the cap, the snap ring s2 has to be removed. Subsequent adjustment is only possible by destroying the tamper-proof cap.

NOTE!
The seals are not available individually. The seal kit order number can be found in the chapter "Technical data".

NOTE!
For installation in an aluminium housing, we recommend using the “S” version. This is equipped with a steel ring s4 and plastic ring s5 to protect the housing from possible damage.

ATTENTION!
Only qualified personnel with mechanical skills may carry out any maintenance work. Generally, the only work that should ever be undertaken is to check, and possibly replace, the seals. When changing seals, oil or grease the new seals thoroughly before fitting them.

Test setup

Test setup (for flow rate v. load pressure characteristic)

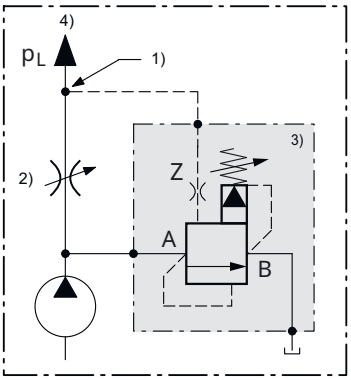

1. Load sensing immediately after orifice
2. Throttle function (orifice size, see performance graphs)
3. Bypass pressure-compensator cartridge
4. Actuator port (p_L = load pressure)

Application examples

The two-stage bypass compensator 8 takes on the following functions:

1. Limiting the maximum system pressure.
2. The load-sensing function: the highest load pressure at any one time is signaled back through the shuttle valves 5 11 13 20 , and the fixed-displacement pump works against this pressure only, plus a Δp = 8 bar (115 psi) from the main stage of the pressure compensator 8 .
3. Vented bypass (approx. 8 bar / 115 psi)

The speed of cylinder 1 is set with the orifice 6 .

The maximum pressure for cylinder 1 is set using the pilot stage of the bypass compensator 8 .

The speed of cylinder 2 is determined by the 4/3 proportional directional valve 12 .

The pressure setting for cylinder 2 is determined by the pilot valve 15 in the load-sensing line, which is a proportional pressure-relief valve.

The inline compensator 14 and the proportional pressure-relief pilot valve 15 interact to provide a proportional 2-way pressure-reducing function.

Because the cylinders 1 and 2 have to travel together and at constant speed in each case, the two inline compensators 7 and 14 must be provided in the circuit. The Δp between the compensator and the measuring point can be set between 5 and 8 bar (70 and 115 psi).

The lifting cylinder 3 travels on its own, and its speed must be independent of the load. This speed is set using the throttle check valves 18 und 19 .
Because the cylinder 3 is installed in a vertical position and must be protected against buckling during lowering, pressure is cut off (70 bar / 1000 psi) by the pilot pressure valve 16 .

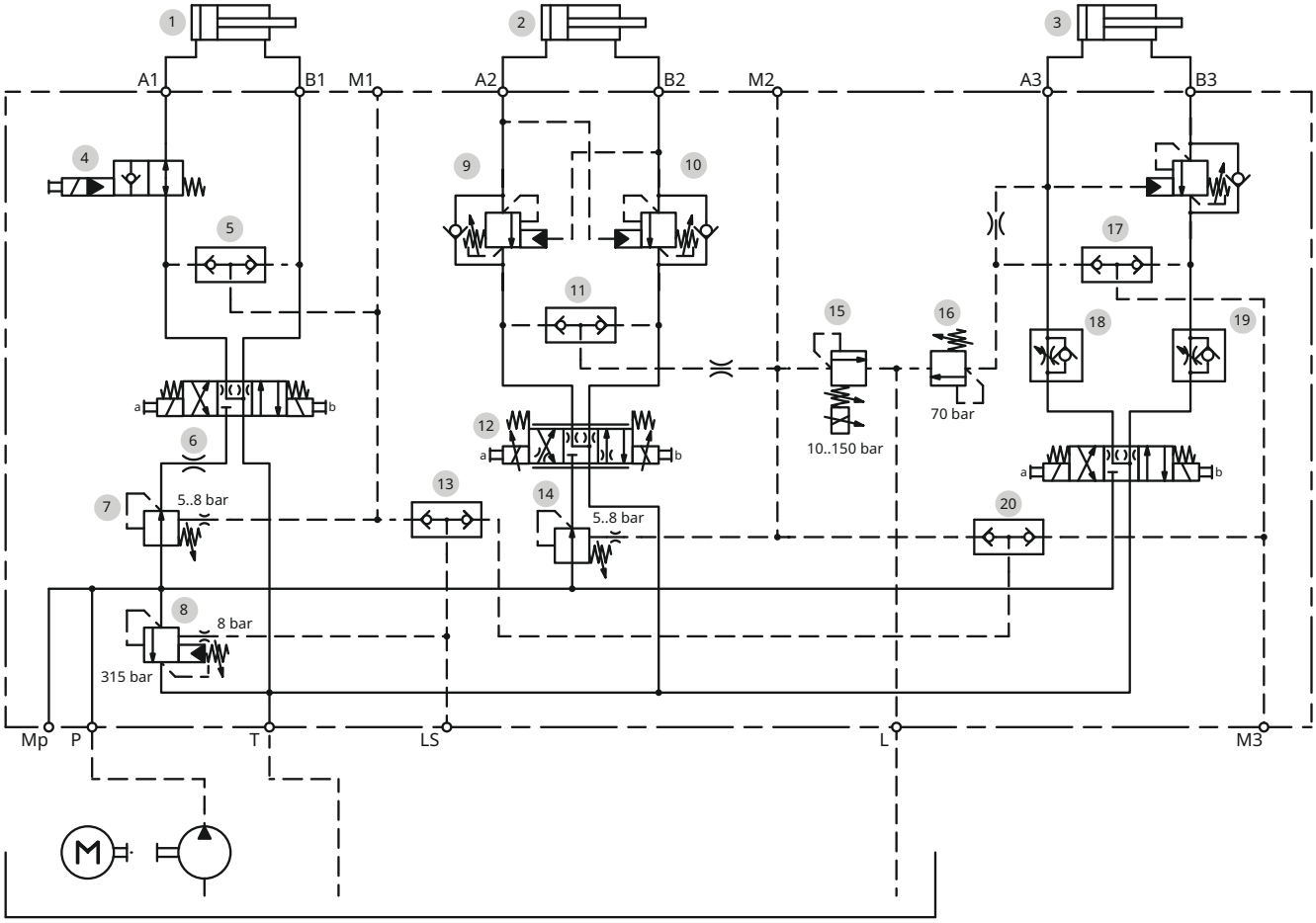

Ordering code

Ex. DW V P A _ - 2 D - 10 - S N N - 4

DW	=	compensator
V	=	pilot operated
P	=	cartridge design
A	=	model, with compensator spring Δp = 8 bar / 115 psi **(standard)**
Z	=	model, with compensator spring Δp = 5 bar / 70 psi
Y ... R	=	special model (on request)
(blank)	=	without steel ring
S	=	with steel ring (to protect the housing)
2	=	pressure relief with additional remote control oil connection
D	=	cavity type DD
10	=	nominal size 10
S	=	adjustment screw with internal hexagon **(standard)**
H	=	adjustment screw with hand knob
L	=	pressure range 10...65 bar / 145...940 psi (light spring)
M	=	pressure range 10...210 bar / 145...3000 psi (medium spring)
N	=	pressure range 10...350 bar / 145...5000 psi (normal spring)
N	=	NBR (nitril-butadien-rubber / BUNA) seals **(standard)**
V	=	FKM (fluorocarbon rubber / VITON) seals (special seals on request)
1 ... 9	=	technical design no. (omit by ordering)

IMPORTANT!
When required, the tamper-proof cap (the adjustment seal) must be ordered separately in plain language.

Related data sheets

Reference	Description
400-P-040011	form tools
400-P-060121	cavity DD
400-P-740112	threaded port body DDY-12

info.ch@bucherhydraulics.com **www.bucherhydraulics.com**

© 2026 by Bucher Hydraulics AG Frutigen, 3714 Frutigen, Switzerland

All rights reserved.
Data is provided for the purpose of product description only, and must not be construed as warranted characteristics in the legal sense. The information does not relieve users from the duty of conducting their own evaluations and tests. Because the products are subject to continual improvement, we reserve the right to amend the product specifications contained in this catalogue.

Bypass Compensator Cartridge, Size 16

Q_{max} = 350 l/min, p_{max} = 420 bar
Seated pilot stage, fixed compensator setting, integral pressure-relief function
Series DWVPA-2B…, DWVPY-2B…, DWVPZ-2B…

- Choice of 5, 8 or 12 bar compensator spring
- Integral pressure-relief function is available in 6 different pressure ranges
- External remote-control port 3 with integral damping orifice
- With internal pilot-oil drain to port 3
- High flow rates
- Excellent stability over the whole pressure and flow range
- Available with hand-knob or tamper-proof cap
- All exposed parts with zinc-nickel plating
- Can be fitted in a line-mounting body

1 Description

These two-stage bypass pressure-compensator (hydrostat) cartridges, series DWVPA-2B-… / DWVPY-2B-… / DWVPZ-2B-… are size 16, high performance screw-in cartridges with an M42x2 mounting thread. The cartridges have a seated pilot stage, and the main stage is designed on the sliding-spool principle. Three models can be supplied, with compensator spring settings of 8 bar (version "A"), 12 bar (version "Y"), or 5 bar (version "Z"). Due to the fixed compensator-spring setting, the control pressure difference between inlet and outlet pressure in hydraulic circuits - for example, across a throttle (an orifice) - is maintained at a constant level. This means that the flow rate is independent of the load pressure at the actuator. The compensator cartridges are also provided with an integral pressure-relief function, available in 6 different pressure ranges. The 1 → 2 pressure-relief function requires a damping orifice before the port 3. A suitable orifice is already incorporated in the screw-in cartridge and is therefore not needed in the manifold block. To safeguard pressure settings, the adjusting screw can be sealed with a tamper-proof cap. Pilot oil is drained internally to port 2. This port should preferably be routed directly to tank, because any pressure surges in port 2 will affect the valve pressure setting by the same amount. By venting the port 3, the main flow can be vented through the pressure compensator from 1 → 2. These screw-in cartridges are used in hydraulic circuits in mobile and industrial applications, predominantly in conjunction with a throttle cartridge. All external parts of the cartridge are zinc-nickel plated according to DIN EN ISO 19 598 and are thus suitable for use in the harshest operating environments. For self-assembly, please refer to the section related data sheets.

2 Symbol

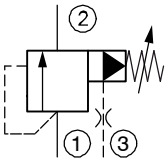

3 Technical data

General characteristics	Description, value, unit
Designation	bypass pressure-compensator cartridge
Design	seated pilot stage, fixed compensator-spring setting, integral pressure-relief function, external remote-control port 3 with integral damping orifice
Mounting method	screw-in cartridge M42x2
Tightening torque	200 Nm ± 10 %

General characteristics	Description, value, unit
Size	nominal size 16, cavity type EB to ISO 7789-42-06-0-07
Weight	0.96 kg
Mounting attitude	unrestricted
Ambient temperature range	-25 °C … +80 °C

Hydraulic characteristics	Description, value, unit
Maximum operating pressure	420 bar
Maximum allowable pressure in port 3	420 bar
Pressure adjustment range: - pressure range “42” - pressure range “35” - pressure range “25” - pressure range “16” - pressure range “10” - pressure range “04”	15 … 420 bar 15 … 350 bar 15 … 250 bar 15 … 160 bar 15 … 100 bar 10 … 40 bar
Maximum flow rate 1 → 2	350 l/min
Maximum flow rate attainable at the actuator	280 l/min
Flow direction	1 → 2, see symbols
Hydraulic fluid	HL and HLP mineral oil to DIN 51 524; for other fluids, please contact BUCHER
Hydraulic fluid temperature range	-25 °C … +80 °C
Viscosity range	10…650 mm^2/s (cSt), recommended 15...250 mm^2/s (cSt)
Minimum fluid cleanliness Cleanliness class to ISO 4406 : 1999	class 20/18/15

4 Performance graphs

measured with oil viscosity 33 mm^2/s (cSt) and in a cavity **with an annular groove**

Test setup (for flow rate v. load pressure characteristic)

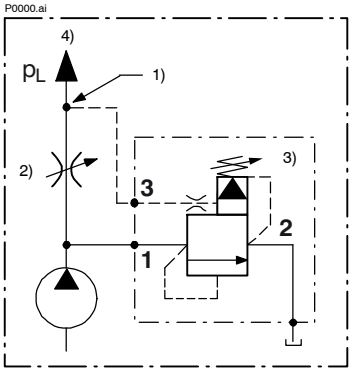

1) Load sensing immediately after orifice 2)
2) Throttle function (orifice size, see performance graphs)
3) Bypass pressure-compensator cartridge
4) Actuator port (p_L = load pressure)

IMPORTANT!
The load sensing and compensator inlet (port 1) tapping points must be located **immediately after the throttle (orifice) and before it** respectively. This minimises the pressure drop and gives the best flow rate / load pressure values.

IMPORTANT!
All characteristics were recorded with a **surplus flow of 10…15 l/min**.

Q = f (p_L) Flow rate v. load pressure characteristic

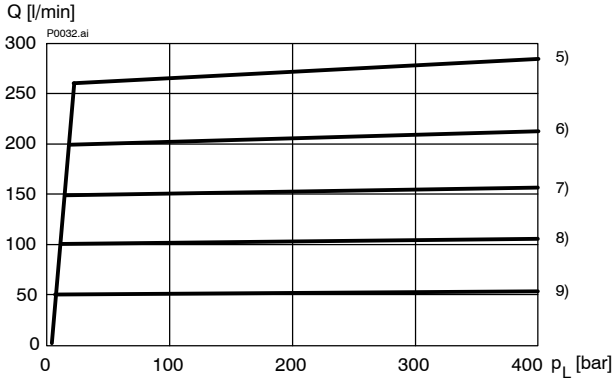

	Throttle / orifice diameters [mm]		
Graph	Δp = 5 bar	Δp = 8 bar	Δp = 12 bar
5)	∅ 14…15	∅ 12…13	∅ 11…12
6)	∅ 12…13	∅ 10.5…11.5	∅ 9.5…10.5
7)	∅ 10.5…11.5	∅ 9…10	∅ 8…9
8)	∅ 8.5…9.5	∅ 7.5…8.5	∅ 6.5…7.5
9)	∅ 6…7	∅ 5…6	∅ 4.5…5.5

Δp = f (Q) Pressure-drop characteristic (control Δp, 1→2)
(port 3 completely unloaded)

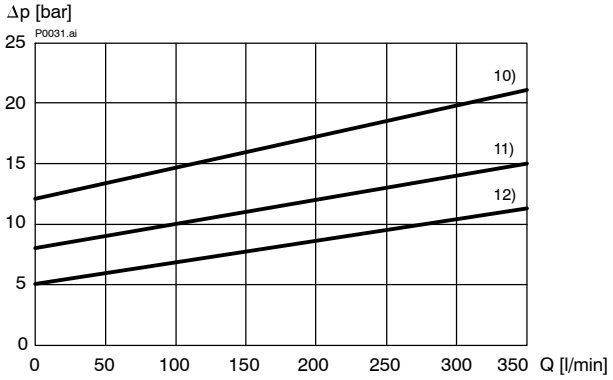

Q = f (p_L) Pressure cut-off v. Load pressure characteristic
(only some examples are shown)

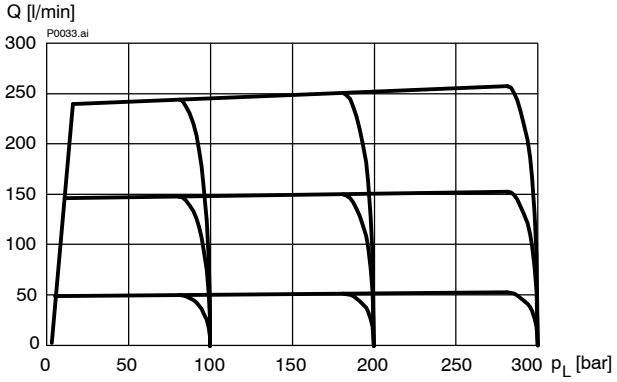

10) 12 bar control Δp (fixed)
11) 8 bar control Δp (fixed)
12) 5 bar control Δp (fixed)

5 Installation information

IMPORTANT!
When fitting the cartridges, use the specified tightening torque. The pressure that the pilot valve is required to open at (15…420 bar depending on pressure range) is set with the adjusting screw (s_1 4). After you have set the valve, lock the adjusting screw with the lock nut.

ATTENTION!
Only qualified personnel with mechanical skills may carry out any maintenance work. Generally, the only work that should ever be undertaken is to check, and possibly replace, the seals. When changing seals, oil or grease the new seals thoroughly before fitting them.

IMPORTANT!
Valve settings can be sealed by fitting the tamper-proof cap. To fit the cap, the snap ring 13) has to be removed. Subsequent adjustment is only possible by destroying the tamper-proof cap..

Seal kit NBR no. DS-344-N 14)

Item	Qty.	Description
1	1	O-ring no. 129 ∅ 39,34 x 2,62 N90
2	1	O-ring no. 125 ∅ 32,99 x 2,62 N90
3	1	O-ring no. 124 ∅ 31,42 x 2,62 N90
4	2	Backup ring ∅ 32,00 x 2,00 x 1,40 FI0751
5	2	Backup ring ∅ 30,00 x 2,00 x 1,40 FI0751
6	1	Seal kit NBR no. DS-350 N for DDPC-1L ...

IMPORTANT!
14) Seal kit with FKM (Viton) seals, no. DS-344-V

6 Dimensions & sectional view

With adjusting screw “S”

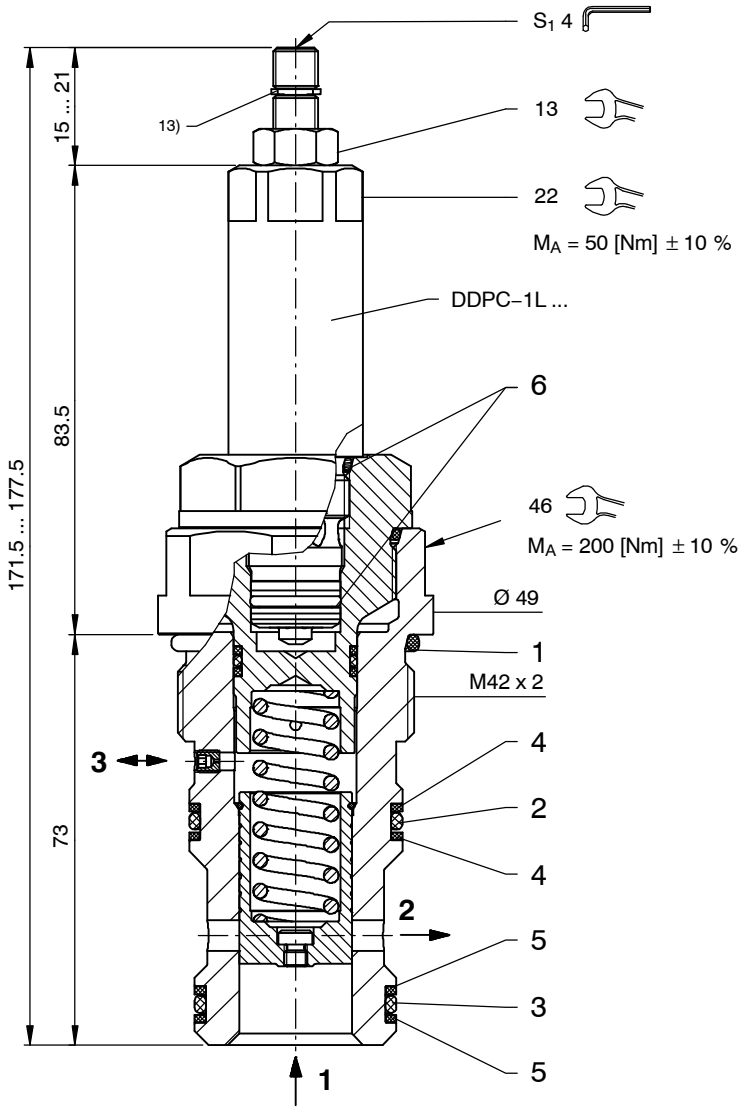

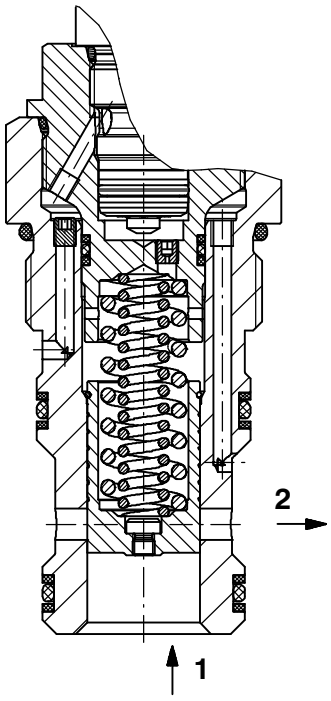

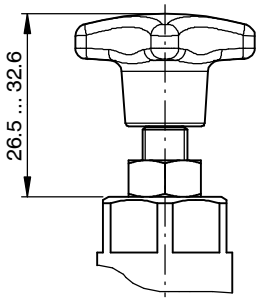

With hand-knob adjuster “H”

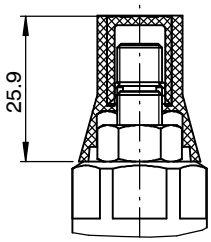

Adjusting screw with tamper-proof cap
(order separately in plain language)

7 Application examples

Typical manifold block for load-sensing circuit with fixed-displacement pump (OPEN CENTRE).
The two-stage bypass compensator (BDWV) takes on the following functions:

a. Limiting the maximum system pressure (315 bar).

b. The load-sensing function: the highest load pressure at any one time is signalled back through the shuttle valves WV1 to WV5, and the fixed-displacement pump works against this pressure only, plus a Δp (8 bar) from the main stage of the preessure compensator.

c. Vented bypass (approx. 8 bar)

Because the cylinders (Zyl. 1 and Zyl. 2) have to travel together and at constant speed in each case, the two inline compensators (IDW1 and IDW2) must be provided in the circuit. The Δp between the compensator and the measuring point can be set between 5…8 bar. The speed of cylinder 1 (Zyl. 1) is set with the orifice (Dü1). The maximum pressure for cylinder 1 (Zyl. 1) is set using the pilot stage of the bypass compensator (BDWV). The speed of cylinder 2 (Zyl. 2) is determined by the 4/3 proportional directional valve. The pressure setting for cylinder 2 (Zyl. 2) is determined by the pilot valve (ePD) in the load-sensing line, which is a proportional pressure-relief valve. The inline compensator and the proportional pressure-relief pilot valve interact to provide a proportional 2-way pressure-reducing function. The lifting cylinder (Zyl. 3) travels on its own, and its speed must be independent of the load. This speed is set using the throttle check valves (DR1 and DR2). The cylinder rod must be protected against buckling when travelling downwards, and therefore pressure limiting (70 bar) is provided by the pressure-relief pilot valve (DV1).

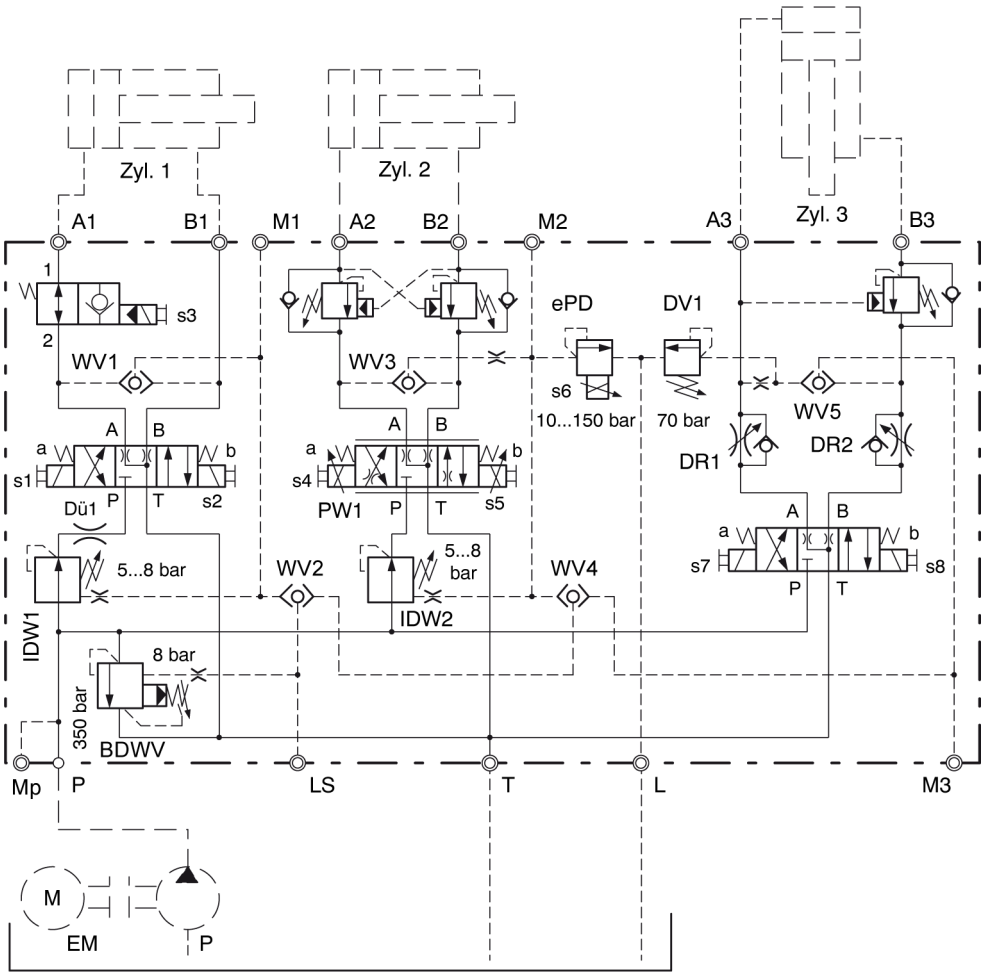

8 Ordering code

Ex. DW V P A - 2 B - 16 - 42 - S _ - 1

DW	=	compensator
V	=	two-stage
P	=	cartridge design
A ... Q	=	standard model, with compensator spring Δp = 8 bar
Y	=	model with compensator spring Δp = 12 bar
Z	=	model with compensator spring Δp = 5 bar
X ... R	=	special features - please consult BUCHER
2	=	pressure function 2 (with external remote-control port 3)
B	=	cavity type EB
16	=	nominal size 16
42	=	pressure range 15 … 420 bar
35	=	pressure range 15 … 350 bar
25	=	pressure range 15 … 250 bar
16	=	pressure range 15 … 160 bar
10	=	pressure range 15 … 100 bar
04	=	pressure range 10 … 40 bar
S	=	screw adjuster (**standard**)
H	=	hand-knob adjuster
(blank)	=	NBR (Nitrile) seals (**standard**)
V	=	FKM (Viton) seals (special seals - please contact BUCHER)
1 ... 9	=	design stage (omit when ordering new units)

IMPORTANT!
When required, the tamper-proof cap (the adjustment seal) must be ordered separately in plain language.

9 Related data sheets

Reference	(Old no.)	Description
400-P-040011	(i-32)	The form-tool hire programme
400-P-080111	(i-55.2)	Cavity type EB to ISO 7789-42-06-0-07
400-P-260111	(D-2.151)	Pressure-relief cartridge, size 4, series DDPC-1L…
400-P-750115	(G-29.22)	Line-mounting body, type GEBAA (G 1”)

info.ch@bucherhydraulics.com www.bucherhydraulics.com

© 2022 by Bucher Hydraulics AG Frutigen, CH-3714 Frutigen
All rights reserved.
Data is provided for the purpose of product description only, and must not be construed as warranted characteristics in the legal sense. The information does not relieve users from the duty of conducting their own evaluations and tests. Because the products are subject to continual improvement, we reserve the right to amend the product specifications contained in this catalogue.

Classification: 430.305.320.305.330.355

Bypass Compensator Cartridge, Size 10

Q_{max} = 140 l/min, p_{max} = 350 bar
Electrically controlled, seated pilot stage, fixed compensator setting
Series WDWVPB-2…, WDWVPZ-2…

- Choice of 5 or 8 bar compensator spring
- Integral pressure-relief function is available in 3 different pressure ranges
- External remote-control port Z with integral damping orifice
- With internal pilot-oil drain to port B
- High flow rates
- Excellent stability over the whole pressure and flow range
- High pressure wet-armature solenoids
- The slip-on coil can be rotated, and it can be replaced without opening the hydraulic envelope
- Various plug-connector systems and voltages are available
- All exposed parts with zinc-nickel plating
- Can be fitted in a line-mounting body

1 Description

These two-stage bypass pressure-compensator (hydrostat) cartridges, series WDWVPB-2… / WDWVPZ-2… are size 10, electrically controlled, screw-in, cartridges with an M42x2 mounting thread. The cartridges have a seated pilot stage, and the main stage is designed on the sliding-spool principle. Three models can be supplied, with compensator spring settings of 8 bar (version "B") or 5 bar (version "Z"). Due to the fixed compensator-spring setting, the control pressure difference between inlet and outlet pressure in hydraulic circuits - for example, across a throttle (an orifice) - is maintained at a constant level. This means that the flow rate is independent of the load pressure at the actuator. The compensator cartridges are also provided with an integral pressure-relief function, available in 3 different pressure ranges. The A → B pressure-relief function requires a damping orifice before the port Z. A suitable orifice is already incorporated in the screw-in cartridge and is therefore not needed in the manifold block. Pilot oil is drained internally to port 2. This port should preferably be routed directly to tank, because any pressure surges in port 2 will affect the valve pressure setting by the same amount. By venting the port Z, the main flow can be vented through the pressure compensator from A → B. These screw-in cartridges are used in hydraulic circuits in mobile and industrial applications, predominantly in conjunction with a throttle cartridge. All external parts of the cartridge are zinc-nickel plated according to DIN EN ISO 19 598 and are thus suitable for use in the harshest operating environments. For self-assembly, please refer to the section related data sheets.

2 Symbol

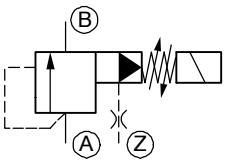

3 Technical data

General characteristics	Description, value, unit
Designation	bypass pressure-compensator cartridge
Design	Electrically controlled, seated pilot stage, fixed compensator-spring setting, integral pressure-relief function, external remote-control port Z with integral damping orifice

WWW.SUMY.IR

General characteristics	Description, value, unit
Mounting method	screw-in cartridge M42x2
Size	nominal size 10, cavity type DD to Bucher standard
Weight	0.52 kg
Mounting attitude	unrestricted
Ambient temperature range	-25 °C … +50 °C

Hydraulic characteristics	Description, value, unit
Maximum operating pressure in port A and Z	350 bar
Maximum allowable pressure in port B (tank)	250 bar
Pressure adjustment range:	350 bar 250 bar 160 bar 100 bar 40 bar
Maximum flow rate	140 l/min
Maximum flow rate attainable at the actuator	55 l/min
Flow direction	A → B, see symbols
Hydraulic fluid	HL and HLP mineral oil to DIN 51 524; for other fluids, please contact BUCHER
Hydraulic fluid temperature range	-25 °C … +80 °C
Viscosity range	10…500 mm^2/s (cSt), recommended 15...250 mm^2/s (cSt)
Minimum fluid cleanliness Cleanliness class to ISO 4406 : 1999	class 20/18/15

Electrical characteristics	Description, value, unit
Supply voltage	12 V DC, 24 V DC / 115 V AC, 230 V AC (50 … 60 Hz)
Supply voltage tolerance	± 10 %
Nominal power consumption	V DC = 27 W V AC = 25 W
Relative duty cycle	100 %
Protection class to ISO 20 653 / EN 60 529	IP 65 / IP 67 / IP 69K, see “Ordering code” (with appropriate mating connector and proper fitting and sealing)
Electrical connection	DIN EN 175301-803, 3-pin 2 P+E (standard) for other connectors, see “Ordering code”

4 Performance graphs

measured with oil viscosity 33 mm²/s (cSt)

Test setup (for flow rate v. load pressure characteristic)

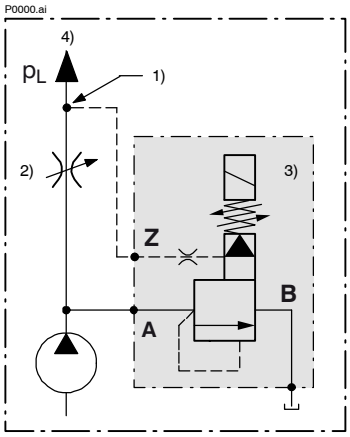

1) Load sensing immediately after orifice 2)
2) Throttle function (orifice size, see performance graphs)
3) Bypass pressure-compensator cartridge
4) Actuator port (p_L = load pressure)

IMPORTANT!
The load sensing and compensator inlet (port 1) tapping points must be located **immediately after the throttle (orifice) and before it** respectively. This minimises the pressure drop and gives the best flow rate / load pressure values.

IMPORTANT!
All characteristics were recorded with a **surplus flow of 10…15 l/min**.

$Q = f(p_L)$ Flow rate v. load pressure characteristic

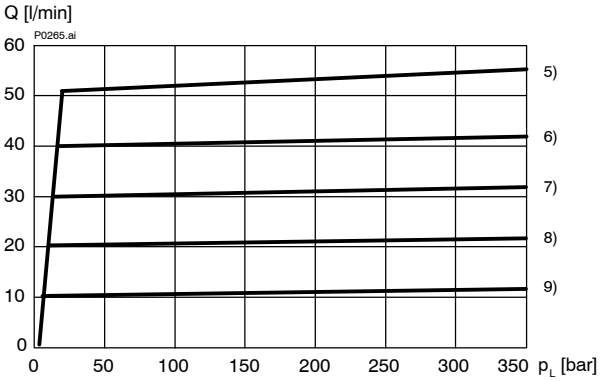

$Q = f(p_L)$ Pressure cut-off v. Load pressure characteristic
(only some examples are shown)

	Throttle / orifice diameters [mm]	
Graph	Δp = 5 bar	Δp = 8 bar
5)		∅ 5.5…6.0
6)	∅ 5.5…6.0	∅ 5.0…5.5
7)	∅ 4.5…5.0	∅ 4.0…4.5
8)	∅ 4.0…4.5	∅ 3.5…4.0
9)	∅ 3.5…4.0	∅ 2.5…3.0

$\Delta p = f(Q)$ Pressure-drop characteristic (control Δp, A → B)
(port Z completely unloaded)

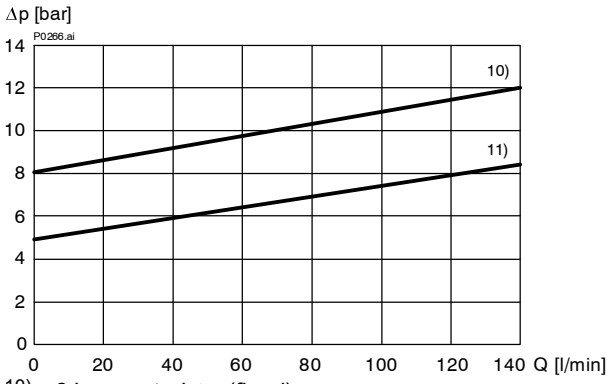

10) 8 bar control Δp (fixed)
11) 5 bar control Δp (fixed)

5 Dimensions & sectional view

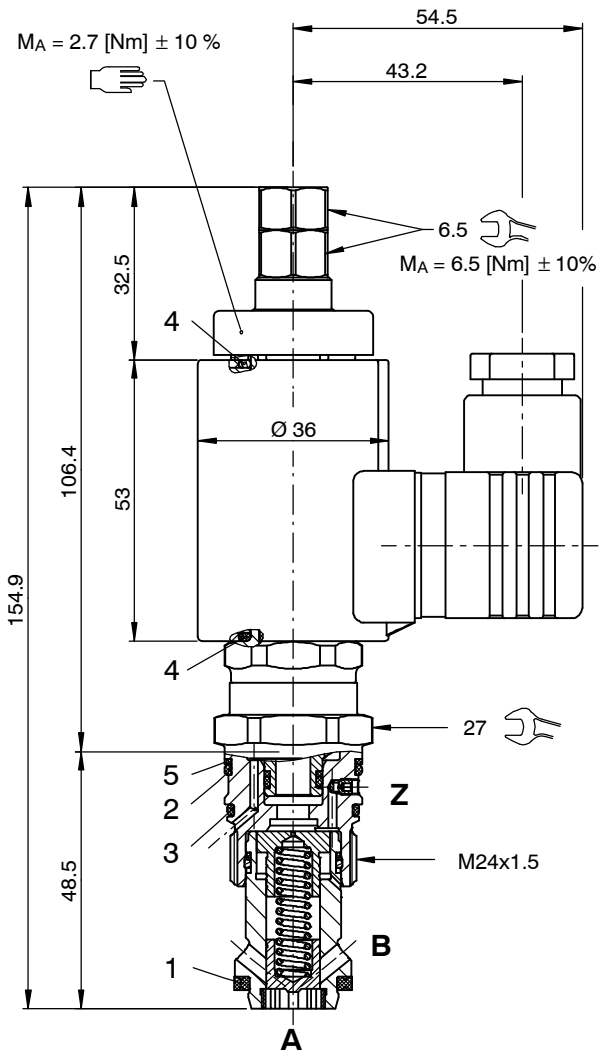

Tightening torque M_A [16] ± 10 %

Cavity type	DD
When fitted in steel	65 [Nm]
When fitted in aluminium	50 [Nm]

Seal kit NBR no. DS-261-N [17]

Item	Qty.	Description		
1	1	Seal ring	∅ 22,10 / 16,50 x 2,50	
2	1	O-ring no. 020	∅ 21,95 x 1,78	N90
3	1	O-ring	23,00 x 1,00	N90
4	2	O-ring	16,00 x 2,00	V83
5	1	Backup ring	∅ 20.90 x 1.4 x 1.0	

IMPORTANT!
[17] Seal kit with FKM (Viton) seals, no. DS-261-V

6 Installation information

IMPORTANT!
When fitting the cartridges, use the specified tightening torque. The pressure that the pilot valve is required to open at (10…350 bar depending on pressure range) is set with the adjusting screw (s_1 4). After you have set the valve, lock the adjusting screw with the lock nut.

ATTENTION!
Only qualified personnel with mechanical skills may carry out any maintenance work. Generally, the only work that should ever be undertaken is to check, and possibly replace, the seals. When changing seals, oil or grease the new seals thoroughly before fitting them.

7 Pressure adjustment

(pressure p1 must be set first, followed by pressure p2)

Nr.	Setting the higher pressure p1 on series WDWVPB… / WDWVPZ… as the higher working pressure with solenoid energised:
1)	Slacken and remove cap nut item A (13 A/F).
2)	Slacken lock nut item D (13 A/F) approx. ½ turn.
3)	With pump running and with the solenoid energised, use the two flats (7 A/F) to turn adjusting screw item B until the required pressure is set in port A.
4)	Hold the adjusting screw item B using the 7 A/F flats while tightening the lock nut item D (13 A/F).
5)	Refit and tighten the cap nut item A.

Nr.	Setting the lower pressure p2 (emergency pressure setting) on series WDWVPB… / WDWVPZ… (a second pressure or alternatively, unload) with solenoid de-energised:
1)	Slacken and remove cap nut item A (13 A/F).
2)	With pump running and with the solenoid de-energised, use the adjusting screw item C (2.5 A/F hex. socket) to set the pressure p2 in port A.
3)	Refit and tighten the cap nut item A. (p2 min.: 2 … 15 bar for WDWVPB, dependent on flow). (p2 min.: 4 … 8 bar for WDWVPZ, dependent on flow).

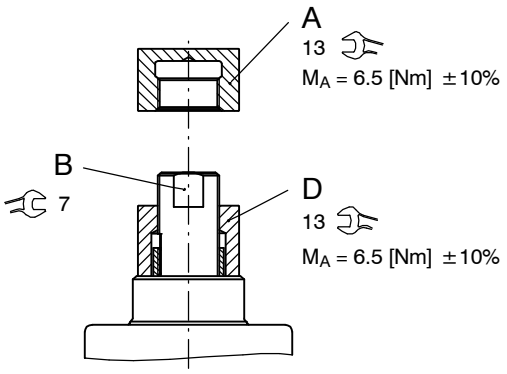

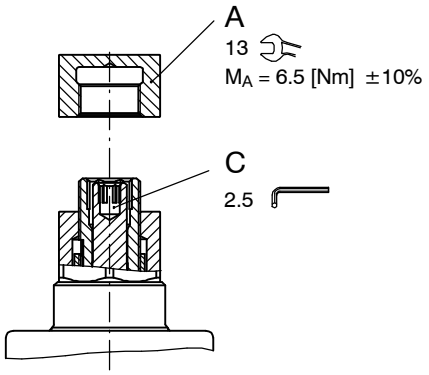

ATTENTION!
When setting pressure p1, adjusting screw item B must not be overtightened as this can damage the shoulder which limits the maximum pressure setting. As soon as a definite end-stop can be felt, do not turn any further.

8 Application examples

Typical manifold block for load-sensing circuit with fixed-displacement pump (OPEN CENTRE).
The two-stage bypass compensator (BDWV) takes on the following functions:

a. Limiting the maximum system pressure (350 bar).

b. The load-sensing function: the highest load pressure at any one time is signalled back through the shuttle valves WV1 to WV5, and the fixed-displacement pump works against this pressure only, plus a Δp (8 bar) from the main stage of the preessure compensator.

c. Vented bypass (approx. 8 bar)

Because the cylinders (Zyl. 1 and Zyl. 2) have to travel together and at constant speed in each case, the two inline compensators (IDW1 and IDW2) must be provided in the circuit. The Δp between the compensator and the measuring point can be set between 5…8 bar. The speed of cylinder 1 (Zyl. 1) is set with the orifice (Dü1). The maximum pressure for cylinder 1 (Zyl. 1) is set using the pilot stage of the bypass compensator (BDWV). The speed of cylinder 2 (Zyl.2) is determined by the 4/3 proportional directional valve. The pressure setting for cylinder 2 (Zyl. 2) is determined by the pilot valve (ePD) in the load-sensing line, which is a proportional pressure-relief valve. The inline compensator and the proportional pressure-relief pilot valve interact to provide a proportional 2-way pressure-reducing function. The lifting cylinder (Zyl. 3) travels on its own, and its speed must be independent of the load. This speed is set using the throttle check valves (DR1 and DR2). The cylinder rod must be protected against buckling when travelling downwards, and therefore pressure limiting (70 bar) is provided by the pressure-relief pilot valve (DV1).

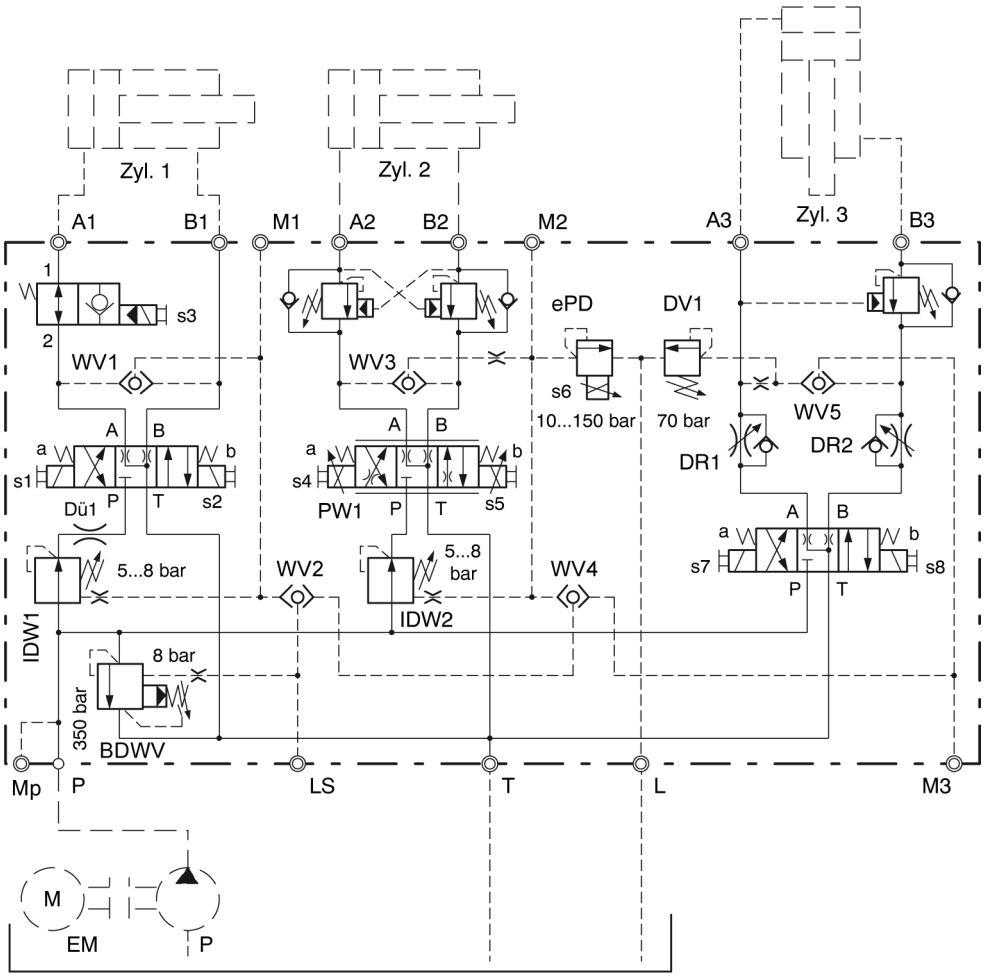

Conventional circuit

6 elements
6 cavities

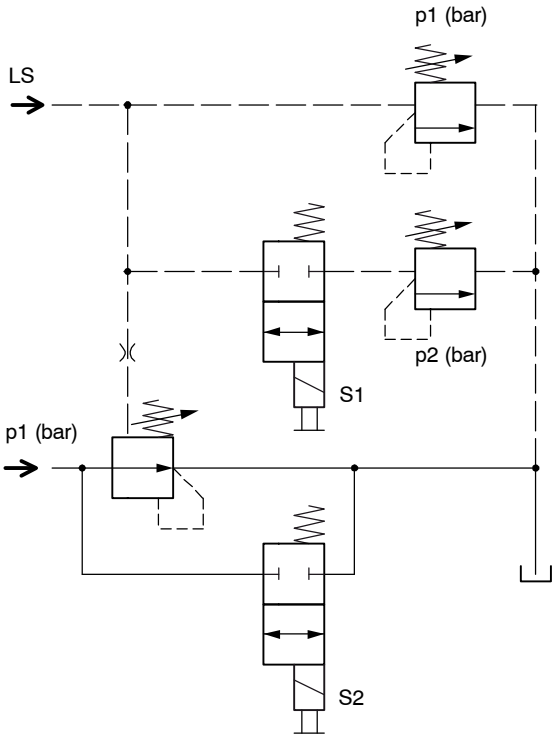

Bucher hydraulics solution

1 element
1 cavitie

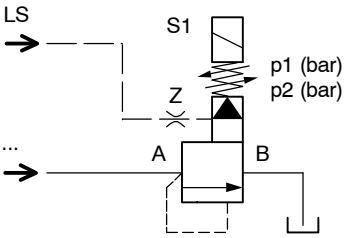

WDWVPB-2…-10…

- LS - control Δp = 8 bar
- Unlouded pressure (LS vented): Δp app. 6 bar at Q = 50 l/min
- S1 energised = pressure p1
- S1 deenergised = pressure p2

WDWVPZ-2…-10…

- LS - control Δp = 5 bar
- Unlouded pressure (LS vented): Δp app. 5 bar at Q = 50 l/min
- S1 energised = pressure p1
- S1 deenergised = pressure p2

9 Ordering code

Ex. WDW V P B – 2 D O – 35 – 10 _ – 2 – 24 D _

WDW	=	electronally controlled compensator
V	=	two–stage
P	=	cartridge design
B ... Q	=	model, with compensator spring Δp = 8 bar
Z	=	model, with compensator spring Δp = 5 bar
Y ... R	=	special features - please consult BUCHER
2	=	pressure function 2 (with external remote-control port Z)
D	=	cavity type DD
O	=	nominally open
35	=	pressure range 10 … 350 bar
25	=	pressure range 10 … 250 bar
16	=	pressure range 10 … 160 bar
10	=	pressure range 10 … 100 bar
04	=	pressure range 10 … 040 bar
10	=	nominal size 10
(blank)	=	NBR (nitril–butadien–rubber / BUNA) seals*(standard)*
V	=	FKM (fluorocarbon rubber / VITON) seals *(special seals – please contact BUCHER)*
1 ... 9	=	design stage (omit when ordering new units)
...	=	voltage e.g. 24 (24 V)
D	=	current DC
A	=	current AC
(blank)	=	DIN EN 175301-803 connection, 3-pole 2 P+E with mating plug, IP 65 *(standard)*
M100	=	DIN EN 175301-803 connection, 3-pole 2 P+E
C	=	Kostal plug connection (IP 65)
JT	=	Junior Timer radial plug connection (with protection diode, IP 65)
IT	=	Junior Timer axial plug connection (with protection diode, IP 65)
D	=	Deutsch plug connection 45° DT04-2P (IP 67/69K)
DT	=	Deutsch plug connection 45° DT04-2P (with protection diode, IP 67/69K)
S	=	AMP Superseal 1.5 (IP 67) / Metri-Pack 150 (IP 65) plug connection
F	=	flying leads (500 mm)

mating plug not supplied

10 Related data sheets

Reference	(Old no.)	Description
400-P-040011	(i-32)	The form-tool hire programme
400-P-060121	(i-45.2)	Cavity type DD
400-P-120100	(W-2.140)	Overview directional solenoid cartridge valve Size 1…5
400-P-120110	(W-2.141)	Coils for screw-in cartridge valves
400-P-740111	(G-24.21)	Line- and manifold-mounting body, type DDY-12 (G 1/2")
400-P-335201	(D-30.22)	Sandwich presssure-relief valve, size 10, type SDWDPB-2D…
400-P-336201	(D-31.22)	Sandwich presssure-relief valve, size 10, type SDWDPB-2D…

info.ch@bucherhydraulics.com www.bucherhydraulics.com

© 2022 by Bucher Hydraulics AG Frutigen, CH-3714 Frutigen
All rights reserved.
Data is provided for the purpose of product description only, and must not be construed as warranted characteristics in the legal sense. The information does not relieve users from the duty of conducting their own evaluations and tests. Because the products are subject to continual improvement, we reserve the right to amend the product specifications contained in this catalogue.

Classification: 430.305.320.305.320.355

BUCHER hydraulics

PRESSURE COMPENSATOR
SPOOL TYPE, INLINE–TYPE COMPENSATOR

WWW.SUMY.IR

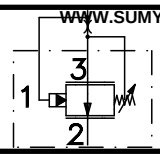

TORQUE:
Steel = 35/40 Ft–Lb. [47/54 Nm]
Aluminum = 25/30 Ft–Lb. [34/41 Nm]

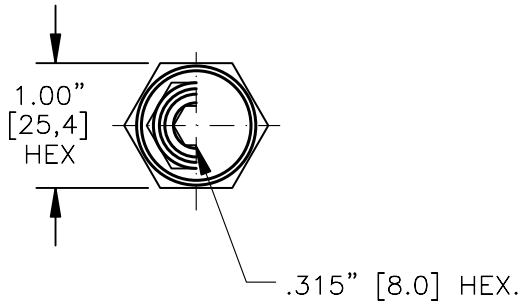

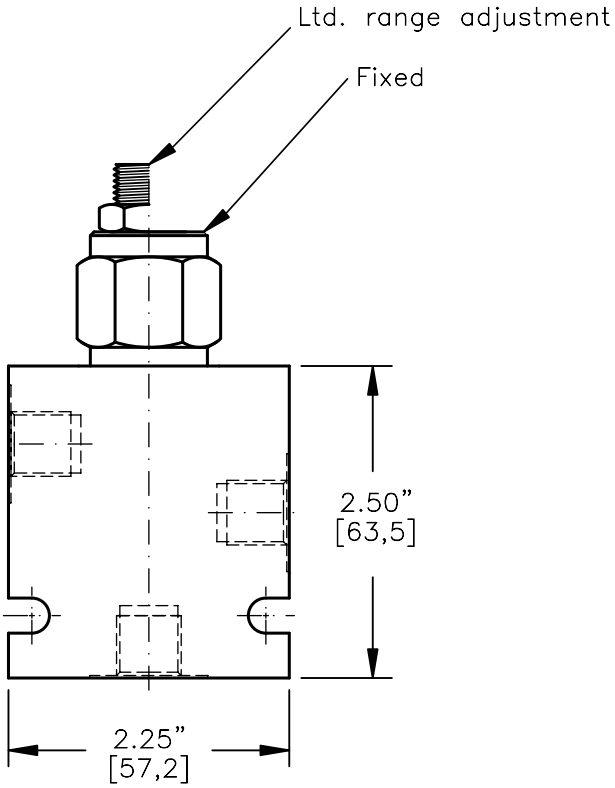

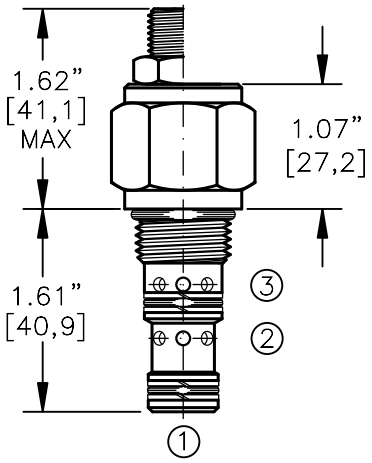

FOR ALUMINUM OR STEEL VALVE HOUSING CONFIGURATIONS SEE PAGE 0–031.1

PCEI–08–N–F–0–XXX

BASIC

SIZE
08 = 3/4"–16 UNF

SEALS
N = BUNA "N"
V = VITON

ADJUSTMENT
F = FIXED (FACTORY SET)
S = ADJUSTING SCREW
C = CAPPED
T = TAMPERPROOF
K = HANDKNOB
M = METAL HANDKNOB

FOR ADJUSTMENT CONTROL OPTIONS SEE PAGE 0–050.0

PORTS
0 = CARTRIDGE ONLY
02BX = G 1/4" BSPP
06TX = SAE – #6
"A" – ALUM. HOUSING
"S" – STEEL HOUSING

PRESSURE BIAS SPRING
100 = 100 PSI (FIXED)
160 = 40–160 PSI (ADJ)

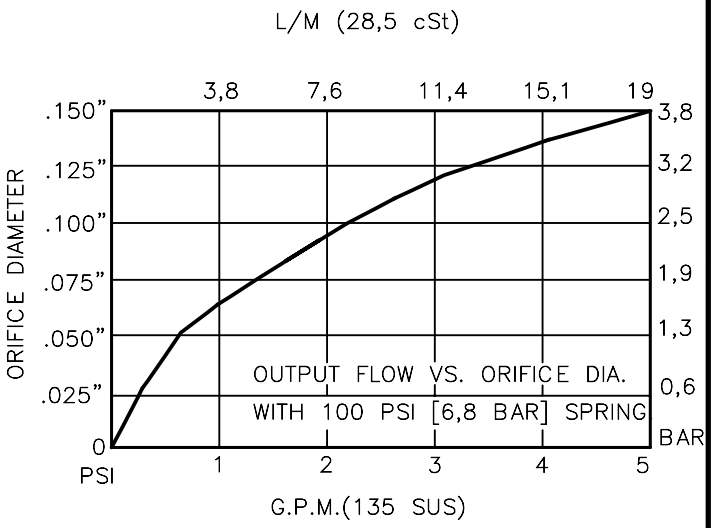

BUCHER hydraulics

WWW.SUMY.IR

PRESSURE COMPENSATOR
SPOOL TYPE, INLINE–TYPE COMPENSATING

DESCRIPTION

This unit is a DIRECT ACTING, SCREW IN CARTRIDGE STYLE, SPOOL TYPE, PRESSURE–COMPENSATING INLINE FLOW ELEMENT, intended for use with a remote fixed or variable orifice to yield a two–port (inline–type), pressure–compensated, flow regulating hydraulic valve.

OPERATIONS

This valve maintains a constant flow rate at port 2 regardless of load pressure changes in a circuit downstream of port 2.
This cartridge compensator flow element maintains a constant differential pressure circuit point "P" to port 2 thereby regulating the hydraulic flow rate between the two points in the circuit. This is an inline type regulator, delivering only the exact amount of pump flow to port 2. All ports can be fully pressurized.

FEATURES AND BENEFITS

Leakproof screw adjustment.
This valve has a fixed or an adjustable bias spring.
Adjustment screw can not be backed out of the valve.
Overset protection – spring can not go solid.
Hardened precision fitted spool & cage provides reliable, long life.
A unibody cage construction provides very low hysteresis and reliable operation.
All external carbon steel parts are plated for longer life against the elements.
Valve is available with fixed, screw, tamperproof, capped and handknob adjustments.
All cartridge valves are 100% functionally tested.
Industry common cavity.

BUCHER hydraulics

WWW.SUMY.IR

PRESSURE COMPENSATOR
SPOOL TYPE, INLINE–TYPE COMPENSATING

SPECIFICATIONS

OPERATING PRESSURE: 5,000 PSI [350 Bar]
PROOF PRESSURE: 10,000 PSI [700 Bar]
FLOW: "F" 4.0 GPM [15 L/M] nominal. See performance chart.
FLOW: "S" 6.0 GPM [23 L/M] nominal. See performance chart.
INTERNAL LEAKAGE: 5 cu.in./min. [85 cc/m].
VALVE HOUSINGS: 2500 PSI [175 Bar] = Aluminum – Anodized.
5000 PSI [350 Bar] = Steel – Unplated.
OPERATING TEMPERATURE: –40° to +250° F. [–40° to +120° C.]
OPERATING MEDIA: All general purpose hydraulic fluids such as MIL–H–5606, SAE–#10, SAE–#20, etc.
INSTALLATION: Use undercut in cavity (port 3 only) to obtain max rated flow.
FILTRATION: 25 microns or better.
SEAL KIT NUMBER: SKN–0832 for buna "N".
SKV–0832 for viton.
WEIGHT: 0.30 lb [.14 kg] cartridge only.
VALVE CAVITY: #C0830, See Page 0–031.0.

info.el@bucherhydraulics.com

www.bucherhydraulics.com/commoncavity

© 2015 by Bucher Hydraulics, Inc., 2545 Northwest Parkway, Elgin, Illinois 60124, USA
All rights reserved.
Data is provided for the purpose of product description only, and must not be construed as warranted characteristics in the legal sense. The information does not relieve users from the duty of conducting their own evaluations and tests. Because the products are subject to continual improvement, we reserve the right to amend the product specifications contained in this catalogue.

Alternative product: DWDP-5-10-... (400-P-330501)

BUCHER hydraulics

PRESSURE COMPENSATOR
SPOOL TYPE, INLINE–TYPE COMPENSATOR

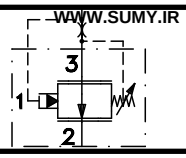

TORQUE:
Steel = 55/60 Ft–Lb. [74/81 Nm]
Aluminum = 35/40 Ft–Lb. [47/54 Nm]

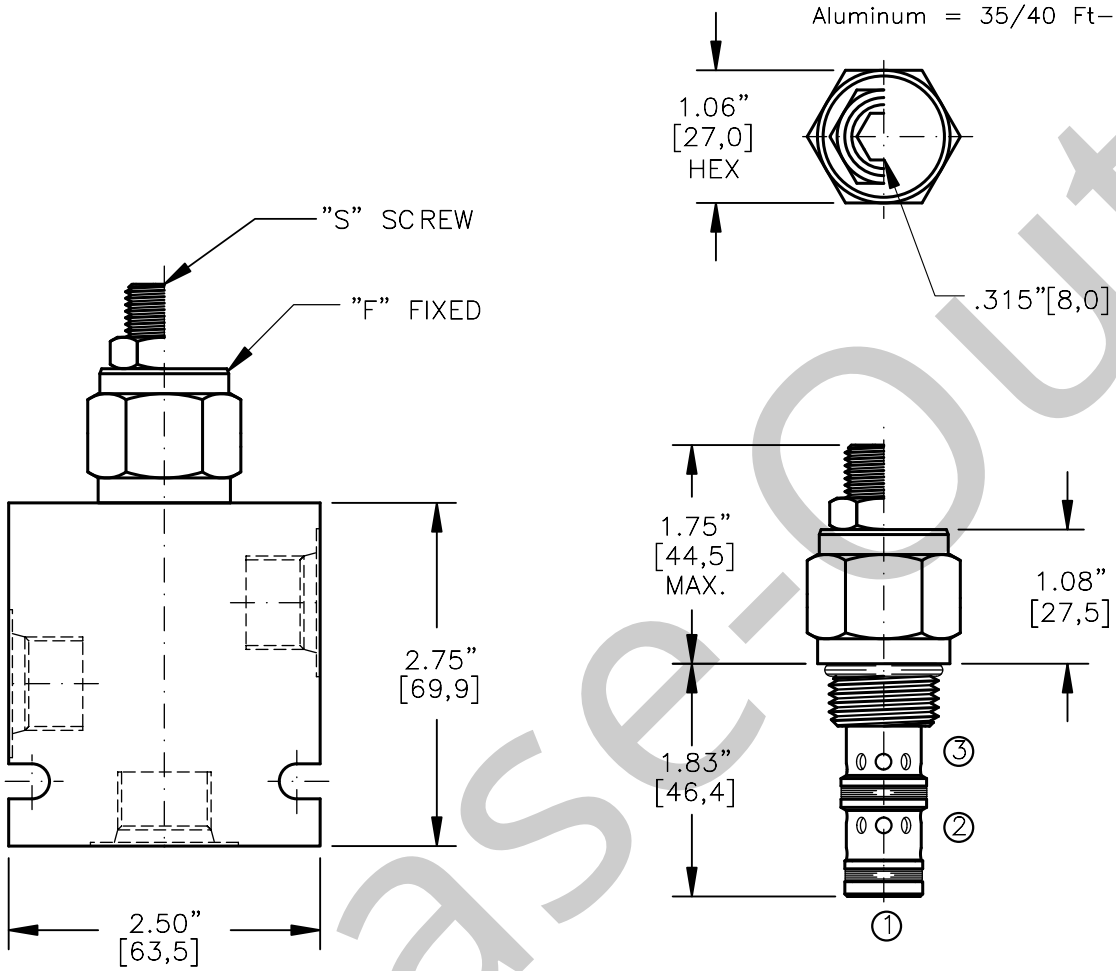

FOR ALUMINUM OR STEEL VALVE HOUSING CONFIGURATIONS SEE PAGE 0–032.1

PCEI–10–X–X–X–XXX

BASIC SIZE
10 = 7/8"–14 UNF

SEALS
N = BUNA "N"
V = VITON

ADJUSTMENT
F = FIXED (FACTORY SET)
S = ADJUSTING SCREW
C = CAPPED
T = TAMPERPROOF
K = HANDKNOB
M = METAL HANDKNOB

FOR ADJUSTMENT CONTROL OPTIONS SEE PAGE 0–050.0

PRESSURE BIAS SPRING
075 = 75 PSI (FIXED)
100 = 100 PSI (FIXED)
080 = 40–80 PSI (ADJ)
120 = 40–120 PSI (ADJ)
160 = 40–160 PSI (ADJ)

PORTS
0 = CARTRIDGE ONLY
02BX = G 1/4" BSPP
03BX = G 3/8" BSPP
06TX = SAE – #6
08TX = SAE – #8

"A" – ALUM. HOUSING
"S" – STEEL HOUSING

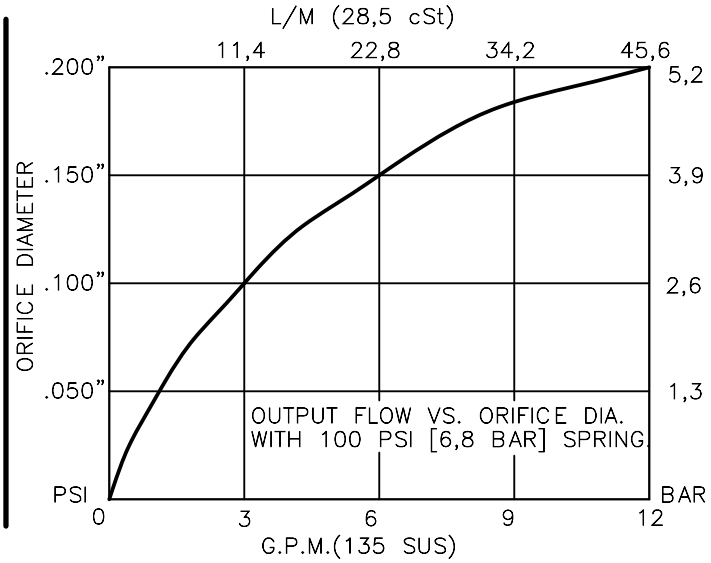

Phase-Out

BUCHER hydraulics

WWW.SUMY.IR

PRESSURE COMPENSATOR SPOOL TYPE, INLINE–TYPE, PRESSURE COMPENSATING ELEMENT.

DESCRIPTION

This unit is a DIRECT ACTING, SCREW IN CARTRIDGE STYLE, SPOOL TYPE, PRESSURE–COMPENSATING INLINE FLOW ELEMENT, intended for use with a remote fixed or variable orifice to yield a two–port (inline–type), pressure–compensated, flow regulating hydraulic valve.

OPERATIONS

This valve maintains a constant flow rate at port 2 regardless of load pressure changes in a circuit downstream of port 2.
This cartridge compensator flow element maintains a constant differential pressure circuit point "P" to port 2 thereby regulating the hydraulic flow rate between the two points in the circuit. This is an inline type regulator, delivering only the exact amount of pump flow to port 2. All ports can be fully pressurized.

FEATURES AND BENEFITS

Leakproof screw adjustment.
This valve has a fixed or an adjustable bias spring.
Adjustment screw can not be backed out of the valve.
Overset protection – spring can not go solid.
Hardened precision fitted spool & cage provides reliable, long life.
A unibody cage construction provides very low hysteresis and reliable operation.
All external carbon steel parts are plated for longer life against the elements.
Valve is available with fixed, screw, tamperproof, capped and handknob adjustments.
All cartridge valves are 100% functionally tested.
Industry common cavity.

Phase-Out

BUCHER hydraulics

WWW.SUMY.IR

PRESSURE COMPENSATOR SPOOL TYPE, INLINE–TYPE, PRESSURE COMPENSATING ELEMENT.

SPECIFICATIONS

OPERATING PRESSURE: 5,000 PSI [350 Bar]
PROOF PRESSURE: 10,000 PSI [700 Bar]
FLOW: 10.0 GPM [38 L/M] nominal. See performance chart.
INTERNAL LEAKAGE: 5 cu.in./min. [85 cc/m].
DEFINITION OF CRACK: evident at 0.06 GPM [0.25 LPM]
VALVE HOUSINGS: 2500 PSI [175 Bar] = Aluminum – Anodized.
5000 PSI [350 Bar] = Steel – Unplated.
OPERATING TEMPERATURE: –40° to +250° F. [–40° to +120° C.]
OPERATING MEDIA: All general purpose hydraulic fluids such as MIL–H–5606, SAE–#10, SAE–#20, etc.
INSTALLATION: Use undercut in cavity (port 3 only) to obtain max rated flow.
FILTRATION: 25 microns or better.
SEAL KIT NUMBER: SKN–1032 for buna "N".
SKV–1032 for viton.
WEIGHT: 0.42 lb [.19 kg] cartridge only.
VALVE CAVITY: #C1030, See Page 0–032.0.

Phase-Out

info.el@bucherhydraulics.com www.bucherhydraulics.com/commoncavity

© 2015 by Bucher Hydraulics, Inc., 2545 Northwest Parkway, Elgin, Illinois 60124, USA
All rights reserved.
Data is provided for the purpose of product description only, and must not be construed as warranted characteristics in the legal sense. The information does not relieve users from the duty of conducting their own evaluations and tests. Because the products are subject to continual improvement, we reserve the right to amend the product specifications contained in this catalogue.

Alternative product: DWDP-5-10-... (400-P-330501)

BUCHER hydraulics

PRESSURE COMPENSATOR
SPOOL TYPE, INLINE–TYPE COMPENSATOR

WWW.SUMY.IR

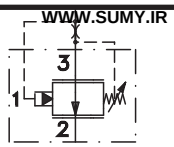

TORQUE:
Steel = 70/75 Ft–Lb. [95/102 Nm]
Aluminum = 55/60 Ft–Lb. [74/81 Nm]

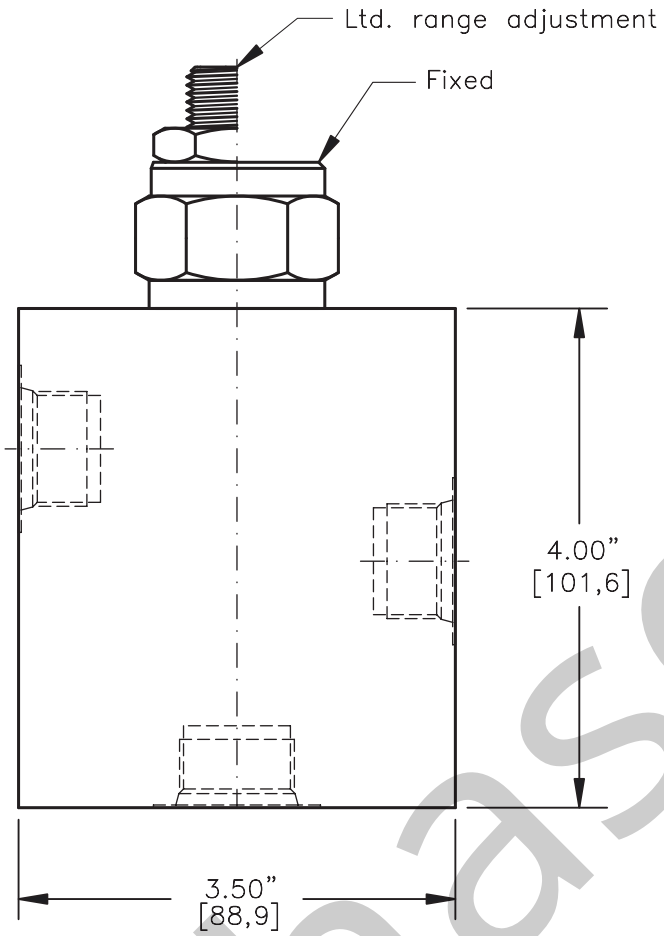

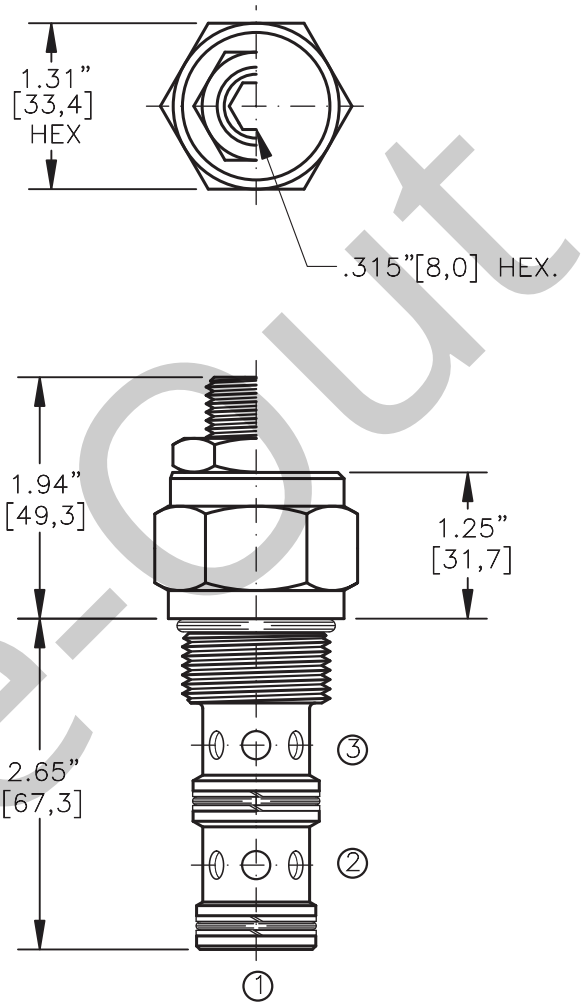

FOR ALUMINUM OR STEEL VALVE HOUSING CONFIGURATIONS SEE PAGE 0–033.1

PCEI–12–X–X–X–XXX

BASIC SIZE
12 = 1.062"–12 UNF

SEALS
N = BUNA "N"
V = VITON

ADJUSTMENT
F = FIXED (FACTORY SET)
S = ADJUSTING SCREW
C = CAPPED
T = TAMPERPROOF

PRESSURE BIAS SPRING
075 = 75 PSI (FIXED)
100 = 100 PSI (FIXED)
160 = 40–160 PSI (ADJ)

PORTS
0 = CARTRIDGE ONLY
04BX = G 1/2" BSPP
06BX = G 3/4" BSPP
10TX = SAE – #10
12TX = SAE – #12

"A" – ALUM. HOUSING
"S" – STEEL HOUSING

FOR ADJUSTMENT CONTROL OPTIONS SEE PAGE 0–050.0

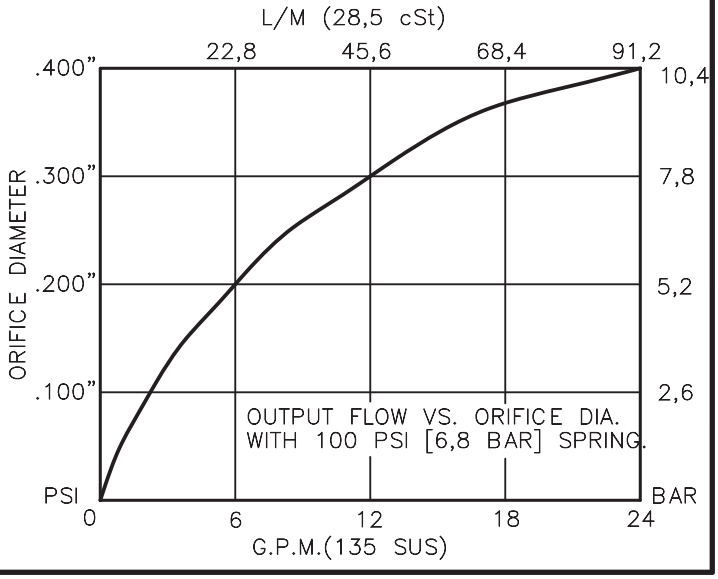

Phase-Out

BUCHER hydraulics

WWW.SUMY.IR

PRESSURE COMPENSATOR SPOOL TYPE, INLINE, PRESSURE COMPENSATING ELEMENT.

DESCRIPTION

This unit is a DIRECT ACTING, SCREW IN CARTRIDGE STYLE, SPOOL TYPE, PRESSURE-COMPENSATING INLINE FLOW ELEMENT, intended for use with a remote fixed or variable orifice to yield a two-port (inline-type), pressure-compensated, flow regulating hydraulic valve.

OPERATIONS

This valve maintains a constant flow rate at port 2 regardless of load pressure changes in a circuit downstream of port 2.
This cartridge compensator flow element maintains a constant differential pressure circuit point "P" to port 2 thereby regulating the hydraulic flow rate between the two points in the circuit. This is an inline type regulator, delivering only the exact amount of pump flow to port 2. All ports can be fully pressurized.

FEATURES AND BENEFITS

Leakproof screw adjustment.
This valve has a fixed or an adjustable bias spring.
Adjustment screw can not be backed out of the valve.
Overset protection - spring can not go solid.
Hardened precision fitted spool & cage provides reliable, long life.
A unibody cage construction provides very low hysteresis and reliable operation.
All external carbon steel parts are plated for longer life against the elements.
Valve is available with fixed, screw, tamperproof, capped and handknob adjustments.
All cartridge valves are 100% functionally tested.

Phase-Out

BUCHER hydraulics

WWW.SUMY.IR

PRESSURE COMPENSATOR SPOOL TYPE, INLINE, PRESSURE COMPENSATING ELEMENT.

SPECIFICATIONS

OPERATING PRESSURE: 5,000 PSI [350 Bar]
PROOF PRESSURE: 10,000 PSI [700 Bar]
FLOW: 24.0 GPM [90.7 L/M] nominal. See performance chart.
INTERNAL LEAKAGE: 5 cu.in./min. [85 cc/m].
DEFINITION OF CRACK: evident at 0.06 GPM [0.25 LPM]
VALVE HOUSINGS: 2500 PSI [175 Bar] = Aluminum – Anodized.
5000 PSI [350 Bar] = Steel – Unplated.
OPERATING TEMPERATURE: –40° to +250° F. [–40° to +120° C.]
OPERATING MEDIA: All general purpose hydraulic fluids such as MIL–H–5606, SAE–#10, SAE–#20, etc.
INSTALLATION: Use undercut in cavity (port 3 only) to obtain max rated flow.
FILTRATION: 25 microns or better.
SEAL KIT NUMBER: SKN–1232 for buna "N".
SKV–1232 for viton.
WEIGHT: 0.86 lb [.39 kg] cartridge only.
VALVE CAVITY: #C1230, See Page 0–032.0.

Phase-Out

info.el@bucherhydraulics.com www.bucherhydraulics.com/commoncavity

© 2015 by Bucher Hydraulics, Inc., 2545 Northwest Parkway, Elgin, Illinois 60124, USA
All rights reserved.
Data is provided for the purpose of product description only, and must not be construed as warranted characteristics in the legal sense. The information does not relieve users from the duty of conducting their own evaluations and tests. Because the products are subject to continual improvement, we reserve the right to amend the product specifications contained in this catalogue.

BUCHER hydraulics

PRESSURE COMPENSATOR
SPOOL TYPE, INLINE–TYPE COMPENSATOR

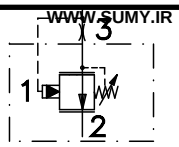

WWW.SUMY.IR

TORQUE:
Steel = 95/100 Ft–Lb. [129/136 Nm]
Aluminum = 70/75 Ft–Lb. [95/102 Nm]

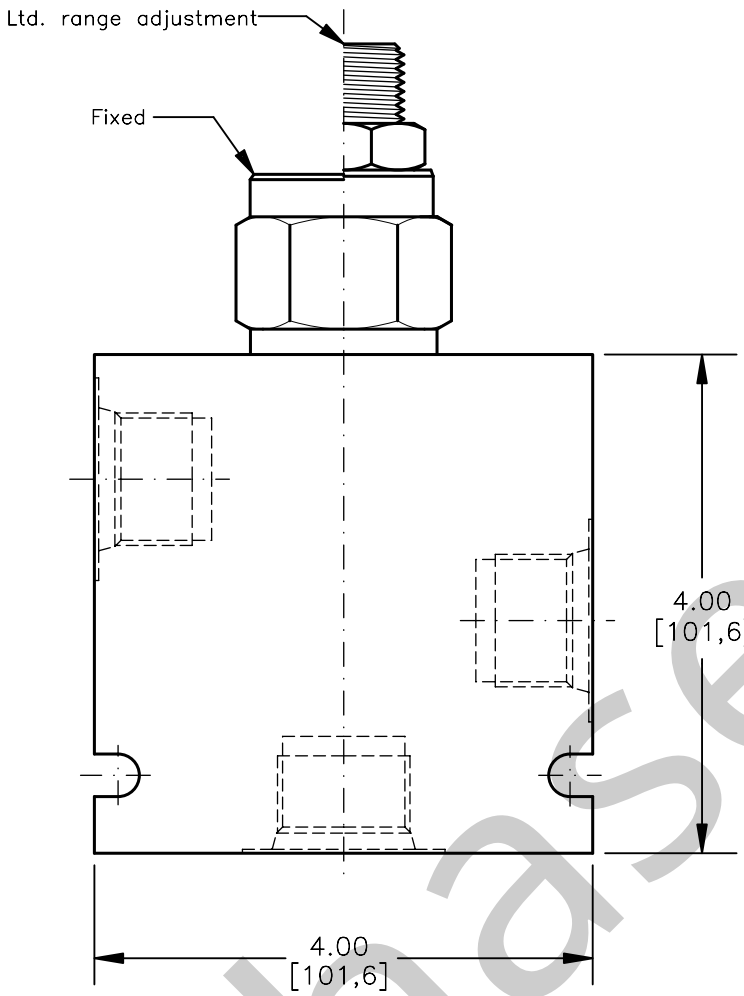

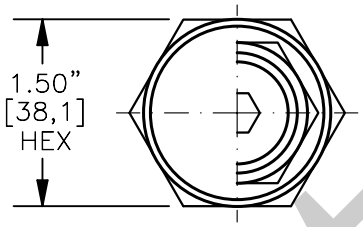

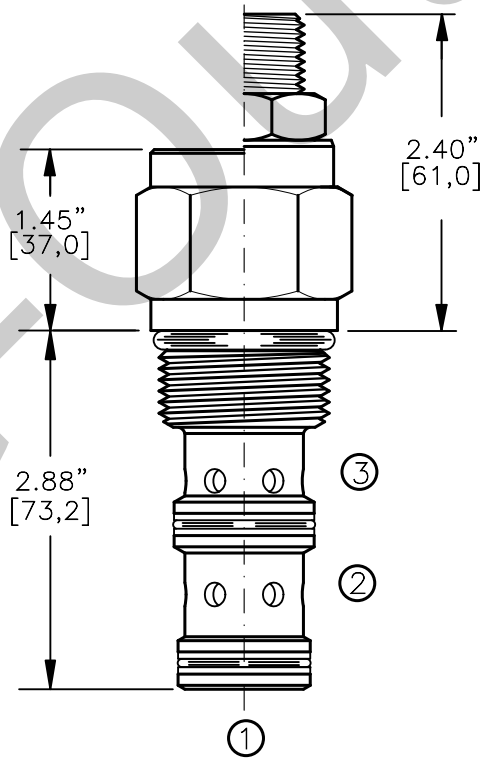

FOR ALUMINUM OR STEEL VALVE HOUSING CONFIGURATIONS SEE PAGE 0–034.1

PCEI–16–X–X–X–XXX

BASIC

SIZE
16 = 1.312"–12 UNF

SEALS
N = BUNA "N"
V = VITON

ADJUSTMENT
F = FIXED (FACTORY SET)
S = ADJUSTING SCREW
C = CAPPED
T = TAMPERPROOF

PRESSURE BIAS SPRING
100 = 100 PSI (FIXED)
180 = 60–180 PSI (ADJ)

PORTS
0 = CARTRIDGE ONLY
06BX = G 3/4" BSPP
08BX = G 1" BSPP
12TX = SAE – #12
16TX = SAE – #16

"A" – ALUM. HOUSING
"S" – STEEL HOUSING

FOR ADJUSTMENT CONTROL
OPTIONS SEE PAGE 0–050.0

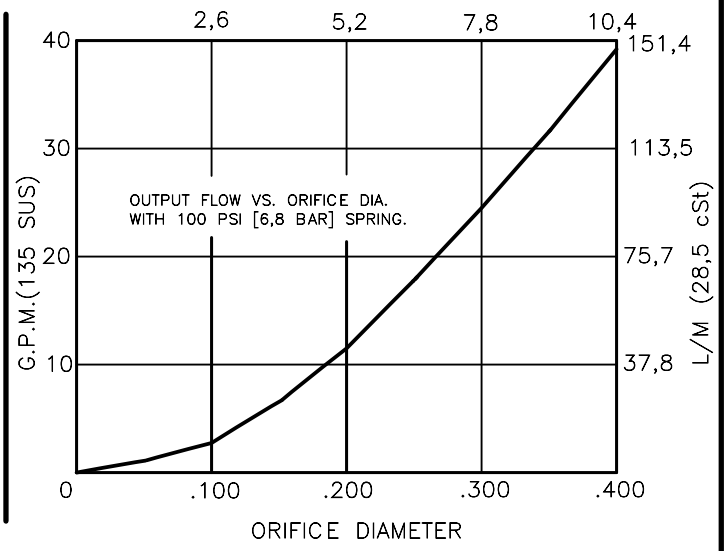

Phase-Out

BUCHER hydraulics

WWW.SUMY.IR

PRESSURE COMPENSATOR SPOOL TYPE, INLINE–TYPE, PRESSURE COMPENSATING ELEMENT.

DESCRIPTION

This unit is a DIRECT ACTING, SCREW IN CARTRIDGE STYLE, SPOOL TYPE, PRESSURE–COMPENSATING INLINE FLOW ELEMENT, intended for use with a remote fixed or variable orifice to yield a two–port (inline–type), pressure–compensated, flow regulating hydraulic valve.

OPERATIONS

This valve maintains a constant flow rate at port 2 regardless of load pressure changes in a circuit downstream of port 2.
This cartridge compensator flow element maintains a constant differential pressure circuit point "P" to port 2 thereby regulating the hydraulic flow rate between the two points in the circuit. This is an inline type regulator, delivering only the exact amount of pump flow to port 2. All ports can be fully pressurized.

FEATURES AND BENEFITS

Leakproof screw adjustment.
This valve has a fixed or an adjustable bias spring.
Adjustment screw can not be backed out of the valve.
Overset protection – spring can not go solid.
Hardened precision fitted spool & cage provides reliable, long life.
A unibody cage construction provides very low hysteresis and reliable operation.
All external carbon steel parts are plated for longer life against the elements.
Valve is available with fixed, screw, tamperproof, capped and handknob adjustments.
All cartridge valves are 100% functionally tested.

Phase-Out

BUCHER hydraulics

WWW.SUMY.IR

PRESSURE COMPENSATOR SPOOL TYPE, INLINE–TYPE, PRESSURE COMPENSATING ELEMENT.

SPECIFICATIONS

OPERATING PRESSURE: 5,000 PSI [350 Bar]
PROOF PRESSURE: 10,000 PSI [700 Bar]
FLOW: 36.0 GPM [136 L/M] nominal. See performance chart.
INTERNAL LEAKAGE: 5 cu.in./min. [85 cc/m].
VALVE HOUSINGS: 2500 PSI [175 Bar] = Aluminum – Anodized.
5000 PSI [350 Bar] = Steel – Unplated.
OPERATING TEMPERATURE: –40° to +250° F. [–40° to +120° C.]
OPERATING MEDIA: All general purpose hydraulic fluids such as MIL–H–5606, SAE–#10, SAE–#20, etc.
INSTALLATION: Use undercut in cavity (port 3 only) to obtain max rated flow.
FILTRATION: 25 microns or better.
SEAL KIT NUMBER: SKN–1632 for buna "N".
SKV–1632 for viton.
WEIGHT: 1.5 lb [.68 kg] cartridge only.
VALVE CAVITY: #C1630, See Page 0–032.0.

Phase-Out

info.el@bucherhydraulics.com www.bucherhydraulics.com/commoncavity

© 2015 by Bucher Hydraulics, Inc., 2545 Northwest Parkway, Elgin, Illinois 60124, USA
All rights reserved.
Data is provided for the purpose of product description only, and must not be construed as warranted characteristics in the legal sense. The information does not relieve users from the duty of conducting their own evaluations and tests. Because the products are subject to continual improvement, we reserve the right to amend the product specifications contained in this catalogue.

BUCHER hydraulics

WWW.SUMY.IR

PRESSURE COMPENSATOR
SPOOL TYPE, PRIORITY–TYPE COMPENSATOR

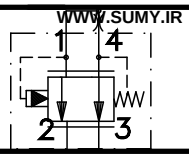

TORQUE:
Steel = 35/40 Ft–Lb. [47/54 Nm]
Aluminum = 25/30 Ft–Lb. [34/41 Nm]

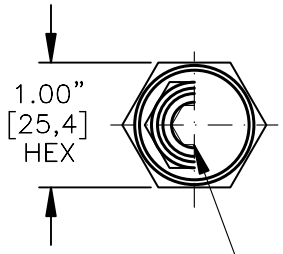

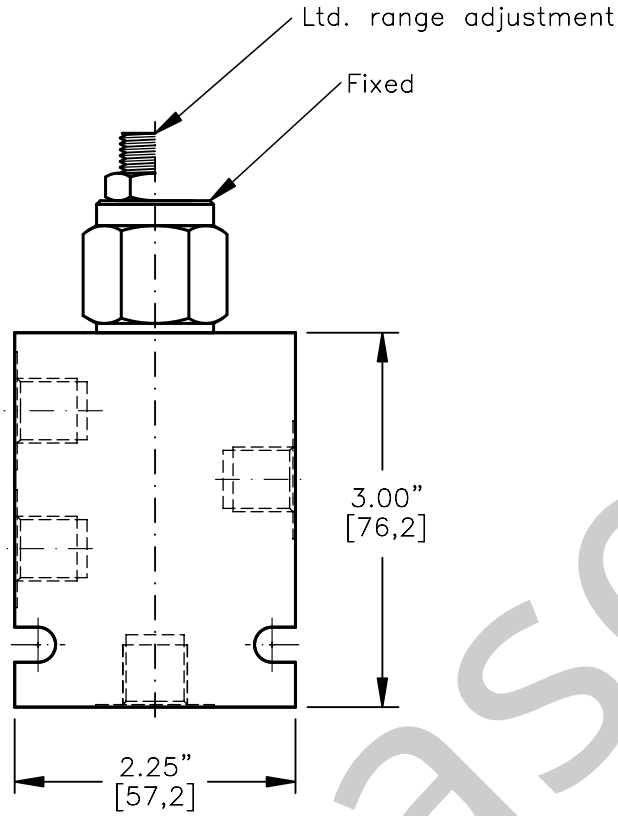

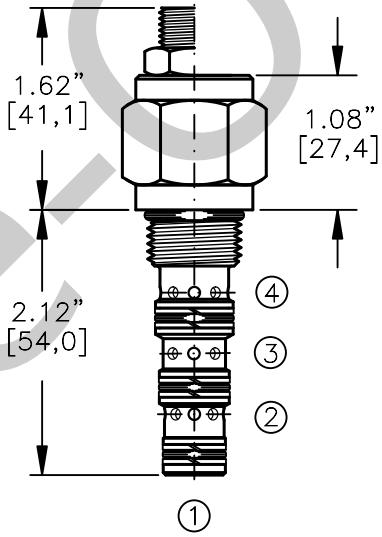

FOR ALUMINUM OR STEEL VALVE HOUSING CONFIGURATIONS SEE PAGE 0–041.1

PCEB–08–X–X–X–XXX

BASIC SIZE
08 = 3/4"–16 UNF

SEALS
N = BUNA "N"
V = VITON

ADJUSTMENT
F = FIXED (FACTORY SET)
S = ADJUSTING SCREW
C = CAPPED
T = TAMPERPROOF
K = HANDKNOB
M = METAL HANDKNOB

FOR ADJUSTMENT CONTROL OPTIONS SEE PAGE 0–050.0

PRESSURE BIAS SPRING
070 = 70 PSI (FIXED)
100 = 100 PSI (FIXED)
160 = 40–160 PSI (ADJ)

PORTS
0 = CARTRIDGE ONLY
02BX = G 1/4" BSPP
06TX = SAE – #6

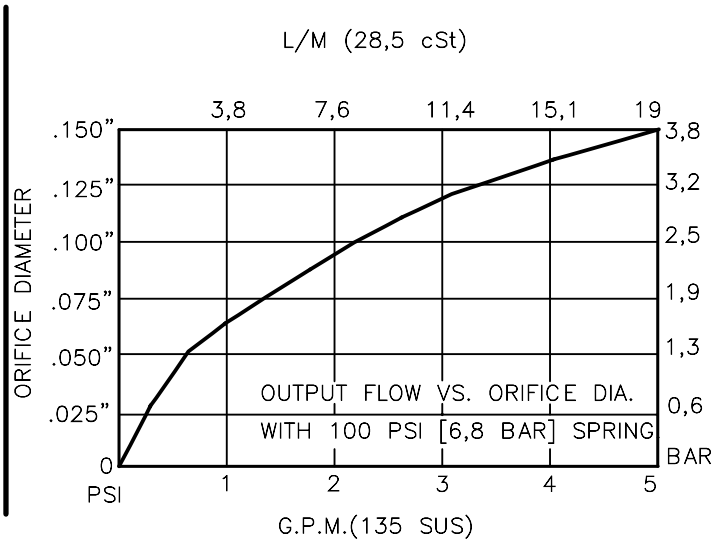

Phase-Out

BUCHER hydraulics

WWW.SUMY.IR

PRESSURE COMPENSATOR
SPOOL TYPE, PRIORITY–TYPE COMPENSATING

DESCRIPTION

This unit is a DIRECT ACTING, SCREW IN CARTRIDGE STYLE, SPOOL TYPE, PRESSURE–COMPENSATING PRIORITY TYPE FLOW ELEMENT, intended for use with a remote fixed or variable orifice to yield a three–port (bypass–type), pressure–compensated, flow regulating hydraulic valve.

OPERATIONS

This valve maintains a constant flow rate at port 3 regardless of load pressure changes in a circuit downstream of port 3.
This cartridge compensator flow element maintains a constant differential pressure circuit point "P" to port 3 thereby regulating the hydraulic flow rate between the two points in the circuit. This is a priority type regulator, delivering pump flow first to port 3 , then by–passing excess flow to port 2. All ports can be fully pressurized.

FEATURES AND BENEFITS

Leakproof screw adjustment.
This valve has a fixed or an adjustable bias spring.
Adjustment screw can not be backed out of the valve.
Overset protection – spring can not go solid.
Hardened precision fitted spool & cage provides reliable, long life.
A unibody cage construction provides very low hysteresis and reliable operation.
All external carbon steel parts are plated for longer life against the elements.
Valve is available with fixed, screw, tamperproof, capped and handknob adjustments.
All cartridge valves are 100% functionally tested.
Industry common cavity.

Phase-Out

BUCHER hydraulics

WWW.SUMY.IR

PRESSURE COMPENSATOR
SPOOL TYPE, PRIORITY–TYPE COMPENSATING

SPECIFICATIONS

OPERATING PRESSURE: 5,000 PSI [350 Bar]
PROOF PRESSURE: 10,000 PSI [700 Bar]
INLET FLOW: 8.0 GPM [30 L/M]. Regulated see performance chart.
INTERNAL LEAKAGE: 5 cu.in./min. [85 cc/m].
DEFINITION OF CRACK: evident at 0.06 GPM [0.25 LPM]
VALVE HOUSINGS: 2500 PSI [175 Bar] = Aluminum – Anodized.
5000 PSI [350 Bar] = Steel – Unplated.
OPERATING TEMPERATURE: –40° to +250° F. [–40° to +120° C.]
OPERATING MEDIA: All general purpose hydraulic fluids such as MIL–H–5606, SAE–#10, SAE–#20, etc.
INSTALLATION: Use undercut in cavity (port 4 only) to obtain max rated flow.
FILTRATION: 25 microns or better.
SEAL KIT NUMBER: SKN–0842 for buna "N".
SKV–0842 for viton.
WEIGHT: 0.26 lb [.12 kg] cartridge only.
VALVE CAVITY: #C0840, See Page 0–041.0.

Phase-Out

info.el@bucherhydraulics.com www.bucherhydraulics.com/commoncavity

© 2015 by Bucher Hydraulics, Inc., 2545 Northwest Parkway, Elgin, Illinois 60124, USA
All rights reserved.
Data is provided for the purpose of product description only, and must not be construed as warranted characteristics in the legal sense. The information does not relieve users from the duty of conducting their own evaluations and tests. Because the products are subject to continual improvement, we reserve the right to amend the product specifications contained in this catalogue.

BUCHER hydraulics

PRESSURE COMPENSATOR
SPOOL TYPE, PRIORITY–TYPE COMPENSATOR

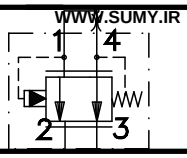

WWW.SUMY.IR

TORQUE:
Steel = 55/60 Ft–Lb. [74/81 Nm]
Aluminum = 35/40 Ft–Lb. [47/54 Nm]

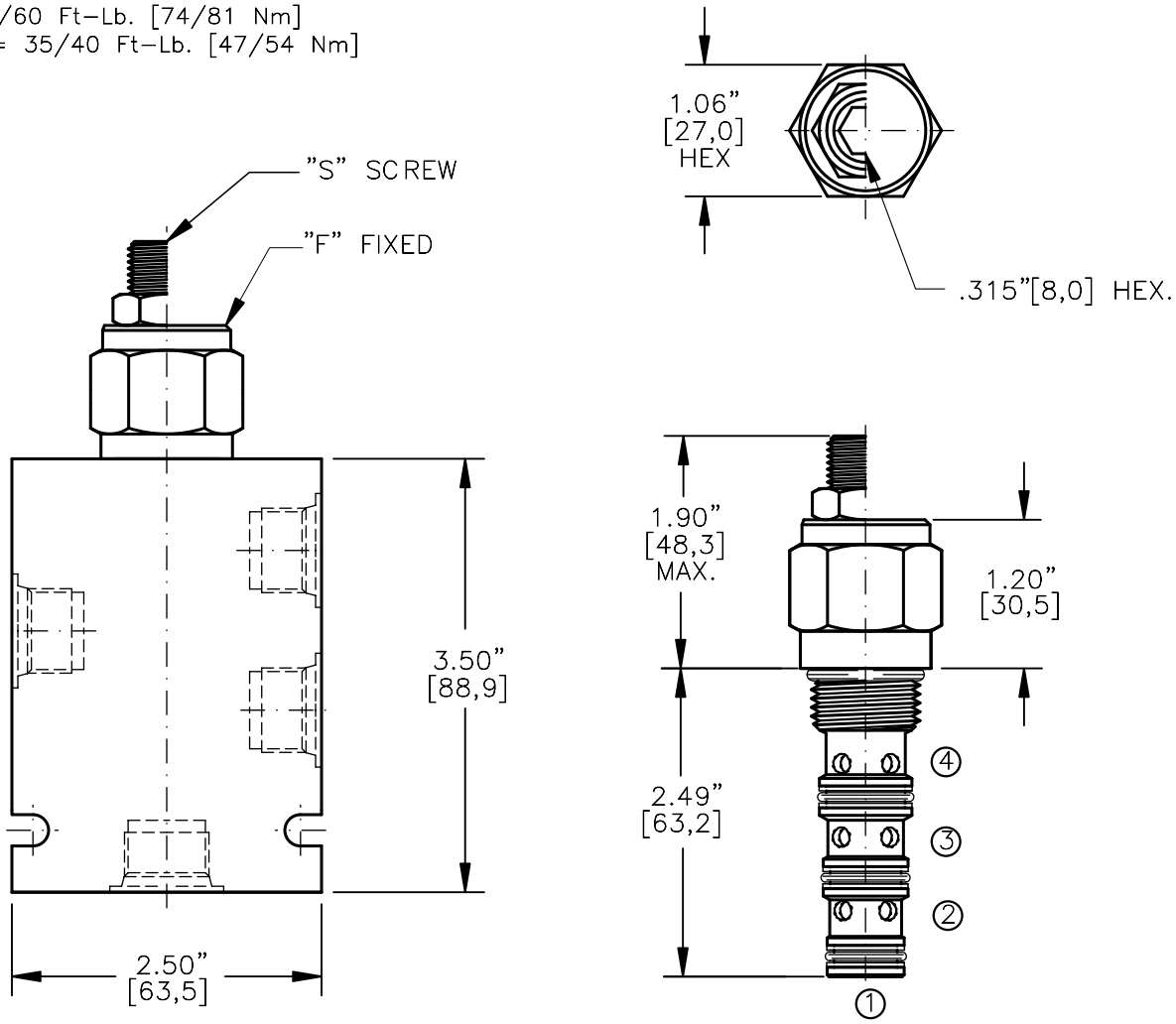

FOR ALUMINUM OR STEEL VALVE HOUSING CONFIGURATIONS SEE PAGE 0–042.1

PCEB–10–X–X–X–XXX

BASIC

SIZE
10 = 7/8"–14 UNF

SEALS
N = BUNA "N"
V = VITON

ADJUSTMENT
F = FIXED (FACTORY SET)
S = ADJUSTING SCREW
C = CAPPED
T = TAMPERPROOF
K = HANDKNOB
M = METAL HANDKNOB

FOR ADJUSTMENT CONTROL OPTIONS SEE PAGE 0–050.0

PRESSURE BIAS SPRING
075 = 75 PSI (FIXED)
100 = 100 PSI (FIXED)
160 = 40–160 PSI (ADJ)

PORTS
0 = CARTRIDGE ONLY
02BX = G 1/4" BSPP
03BX = G 3/8" BSPP
06TX = SAE – #6
08TX = SAE – #8

"A" – ALUM. HOUSING
"S" – STEEL HOUSING

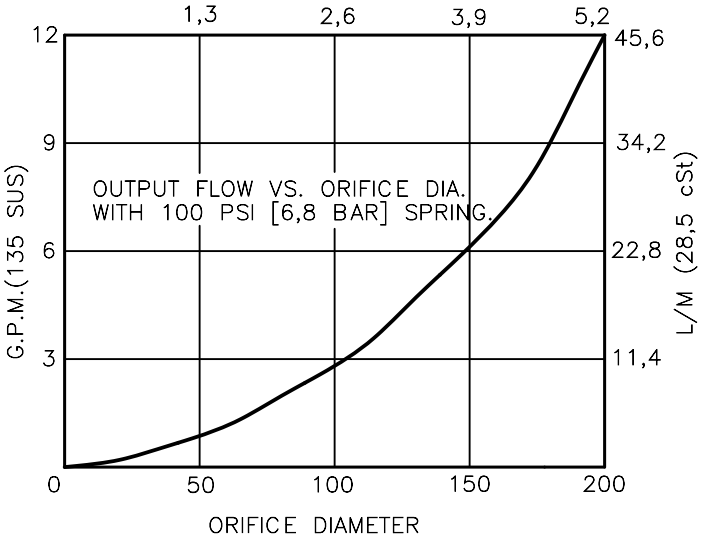

BUCHER hydraulics

WWW.SUMY.IR

PRESSURE COMPENSATOR SPOOL TYPE, PRIORITY–TYPE, PRESSURE COMPENSATING ELEMENT.

DESCRIPTION

This unit is a DIRECT ACTING, SCREW IN CARTRIDGE STYLE, SPOOL TYPE, PRESSURE–COMPENSATING PRIORITY TYPE FLOW ELEMENT, intended for use with a remote fixed or variable orifice to yield a three–port (bypass–type), pressure–compensated, flow regulating hydraulic valve.

OPERATIONS

This valve maintains a constant flow rate at port 3 regardless of load pressure changes in a circuit downstream of port 3.
This cartridge compensator flow element maintains a constant differential pressure circuit point "P" to port 3 thereby regulating the hydraulic flow rate between the two points in the circuit. This is a priority type regulator, delivering pump flow first to port 3 , then by–passing excess flow to port 2. All ports can be fully pressurized.

FEATURES AND BENEFITS

Leakproof screw adjustment.
This valve has a fixed or an adjustable bias spring.
Adjustment screw can not be backed out of the valve.
Overset protection – spring can not go solid.
Hardened precision fitted spool & cage provides reliable, long life.
A unibody cage construction provides very low hysteresis and reliable operation.
All external carbon steel parts are plated for longer life against the elements.
Valve is available with fixed, screw, tamperproof, capped and handknob adjustments.
All cartridge valves are 100% functionally tested.
Industry common cavity.

BUCHER hydraulics

WWW.SUMY.IR

PRESSURE COMPENSATOR SPOOL TYPE, PRIORITY–TYPE, PRESSURE COMPENSATING ELEMENT.

SPECIFICATIONS

OPERATING PRESSURE: 5,000 PSI [350 Bar]
PROOF PRESSURE: 10,000 PSI [700 Bar]
INLET FLOW: 18.0 GPM [68 L/M]. Regulated see performance chart.
INTERNAL LEAKAGE: 5 cu.in./min. [85 cc/m].
DEFINITION OF CRACK: evident at 0.06 GPM [0.25 LPM]
VALVE HOUSINGS: 2500 PSI [175 Bar] = Aluminum – Anodized.
5000 PSI [350 Bar] = Steel – Unplated.
OPERATING TEMPERATURE: –40° to +250° F. [–40° to +120° C.]
OPERATING MEDIA: All general purpose hydraulic fluids such as MIL–H–5606, SAE–#10, SAE–#20, etc.
INSTALLATION: Use undercut in cavity (port 4 only) to obtain max rated flow.
FILTRATION: 25 microns or better.
SEAL KIT NUMBER: SKN–1042 for buna "N".
SKV–1042 for Viton.
WEIGHT: 0.46 lb [.21 kg] cartridge only.
VALVE CAVITY: #C1040, See Page 0–042.0.

info.el@bucherhydraulics.com www.bucherhydraulics.com/commoncavity

© 2015 by Bucher Hydraulics, Inc., 2545 Northwest Parkway, Elgin, Illinois 60124, USA
All rights reserved.
Data is provided for the purpose of product description only, and must not be construed as warranted characteristics in the legal sense. The information does not relieve users from the duty of conducting their own evaluations and tests. Because the products are subject to continual improvement, we reserve the right to amend the product specifications contained in this catalogue.

BUCHER hydraulics

WWW.SUMY.IR

PRESSURE COMPENSATOR
SPOOL TYPE, PRIORITY–TYPE COMPENSATOR

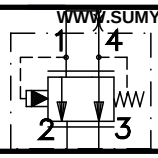

TORQUE:
Steel = 70/75 Ft–Lb. [95/102 Nm]
Aluminum = 55/60 Ft–Lb. [74/81 Nm]

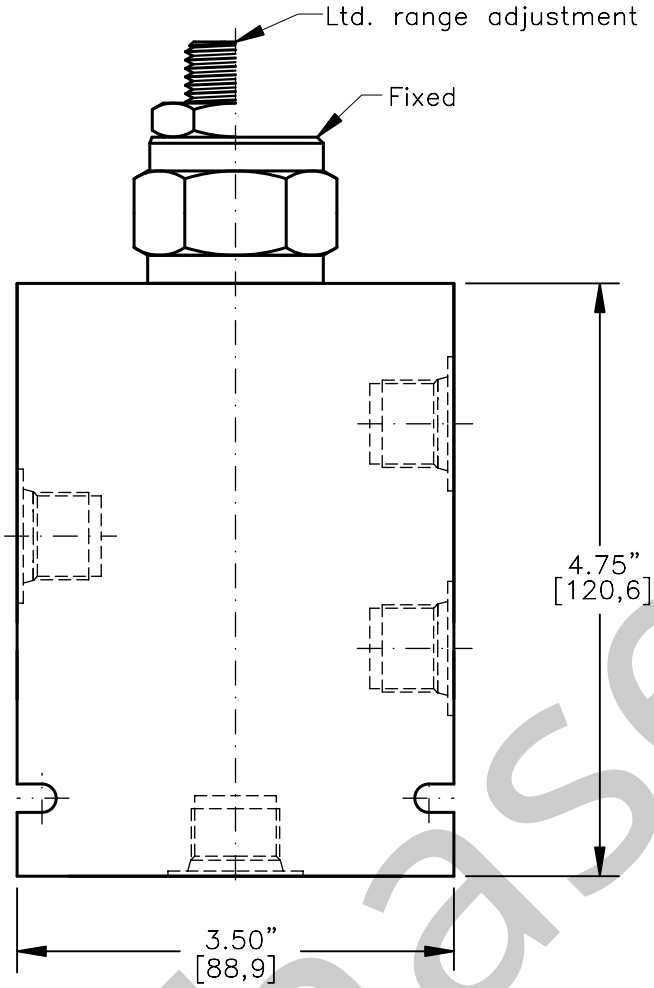

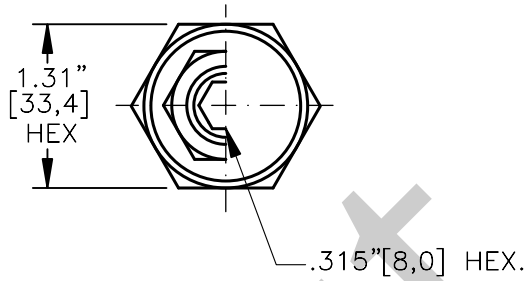

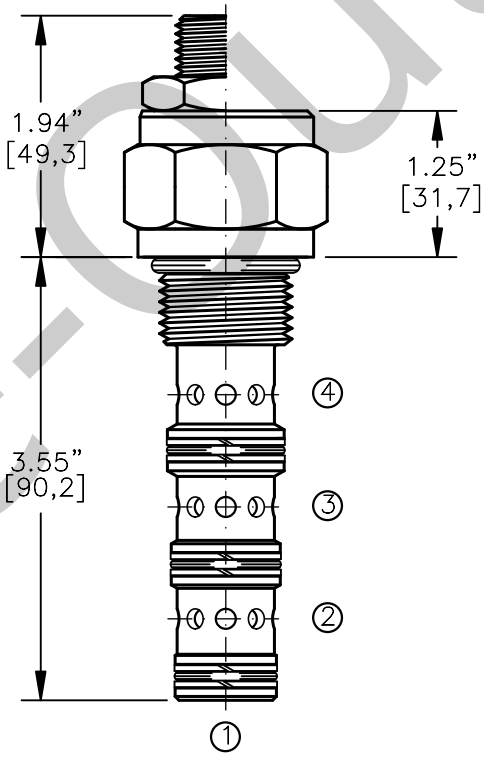

FOR ALUMINUM OR STEEL VALVE HOUSING CONFIGURATIONS SEE PAGE 0–043.1

PCEB–12–X–X–X–XXX

BASIC

SIZE
12 = 1.062"–12 UNF

SEALS
N = BUNA "N"
V = VITON

ADJUSTMENT
F = FIXED (FACTORY SET)
S = ADJUSTING SCREW
C = CAPPED
T = TAMPERPROOF

PRESSURE BIAS SPRING
075 = 75 PSI (FIXED)
100 = 100 PSI (FIXED)
160 = 40–160 PSI (ADJ)

PORTS
0 = CARTRIDGE ONLY
04BX = G 1/2" BSPP
06BX = G 3/4" BSPP
10TX = SAE – #10
12TX = SAE – #12

"A" – ALUM. HOUSING
"S" – STEEL HOUSING

FOR ADJUSTMENT CONTROL OPTIONS SEE PAGE 0–050.0

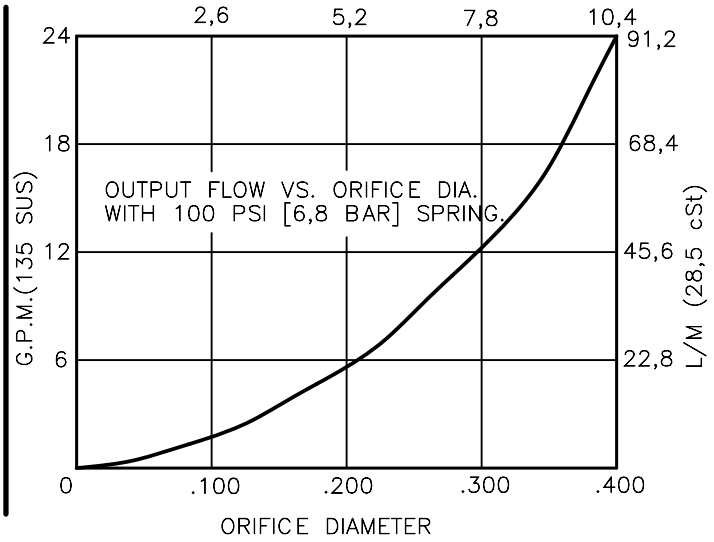

Phase-Out

BUCHER hydraulics

WWW.SUMY.IR

PRESSURE COMPENSATOR SPOOL TYPE, PRIORITY–TYPE, PRESSURE COMPENSATING ELEMENT.

DESCRIPTION

This unit is a DIRECT ACTING, SCREW IN CARTRIDGE STYLE, SPOOL TYPE, PRESSURE–COMPENSATING PRIORITY TYPE FLOW ELEMENT, intended for use with a remote fixed or variable orifice to yield a three–port (bypass–type), pressure–compensated, flow regulating hydraulic valve.

OPERATIONS

This valve maintains a constant flow rate at port 3 regardless of load pressure changes in a circuit downstream of port 3.
This cartridge compensator flow element maintains a constant differential pressure circuit point "P" to port 3 thereby regulating the hydraulic flow rate between the two points in the circuit. This is a priority type regulator, delivering pump flow first to port 3 , then by–passing excess flow to port 2. All ports can be fully pressurized.

FEATURES AND BENEFITS

Leakproof screw adjustment.
This valve has a fixed or an adjustable bias spring.
Adjustment screw can not be backed out of the valve.
Overset protection – spring can not go solid.
Hardened precision fitted spool & cage provides reliable, long life.
A unibody cage construction provides very low hysteresis and reliable operation.
All external carbon steel parts are plated for longer life against the elements.
Valve is available with fixed, screw, tamperproof and capped adjustments.
All cartridge valves are 100% functionally tested.

Phase-Out

BUCHER hydraulics

WWW.SUMY.IR

PRESSURE COMPENSATOR SPOOL TYPE, PRIORITY–TYPE, PRESSURE COMPENSATING ELEMENT.

SPECIFICATIONS

OPERATING PRESSURE: 5,000 PSI [350 Bar]
PROOF PRESSURE: 10,000 PSI [700 Bar]
INLET FLOW: 32.0 GPM [120 L/M]. Regulated see performance chart.
INTERNAL LEAKAGE: 5 cu.in./min. [85 cc/m].
DEFINITION OF CRACK: evident at 0.06 GPM [0.25 LPM]
VALVE HOUSINGS: 2500 PSI [175 Bar] = Aluminum – Anodized.
5000 PSI [350 Bar] = Steel – Unplated.
OPERATING TEMPERATURE: –40° to +250° F. [–40° to +120° C.]
OPERATING MEDIA: All general purpose hydraulic fluids such as MIL–H–5606, SAE–#10, SAE–#20, etc.
INSTALLATION: Use undercut in cavity (port 4 only) to obtain max rated flow.
FILTRATION: 25 microns or better.
SEAL KIT NUMBER: SKN–1242 for buna "N".
SKV–1242 for viton.
WEIGHT: 0.92 lb [.42 kg] cartridge only.
VALVE CAVITY: #C1240, See Page 0–043.0.

Phase-Out

info.el@bucherhydraulics.com www.bucherhydraulics.com/commoncavity

© 2015 by Bucher Hydraulics, Inc., 2545 Northwest Parkway, Elgin, Illinois 60124, USA
All rights reserved.
Data is provided for the purpose of product description only, and must not be construed as warranted characteristics in the legal sense. The information does not relieve users from the duty of conducting their own evaluations and tests. Because the products are subject to continual improvement, we reserve the right to amend the product specifications contained in this catalogue.

BUCHER hydraulics

PRESSURE COMPENSATOR
SPOOL TYPE, PRIORITY–TYPE COMPENSATOR

WWW.SUMY.IR

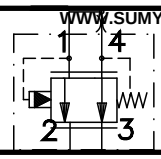

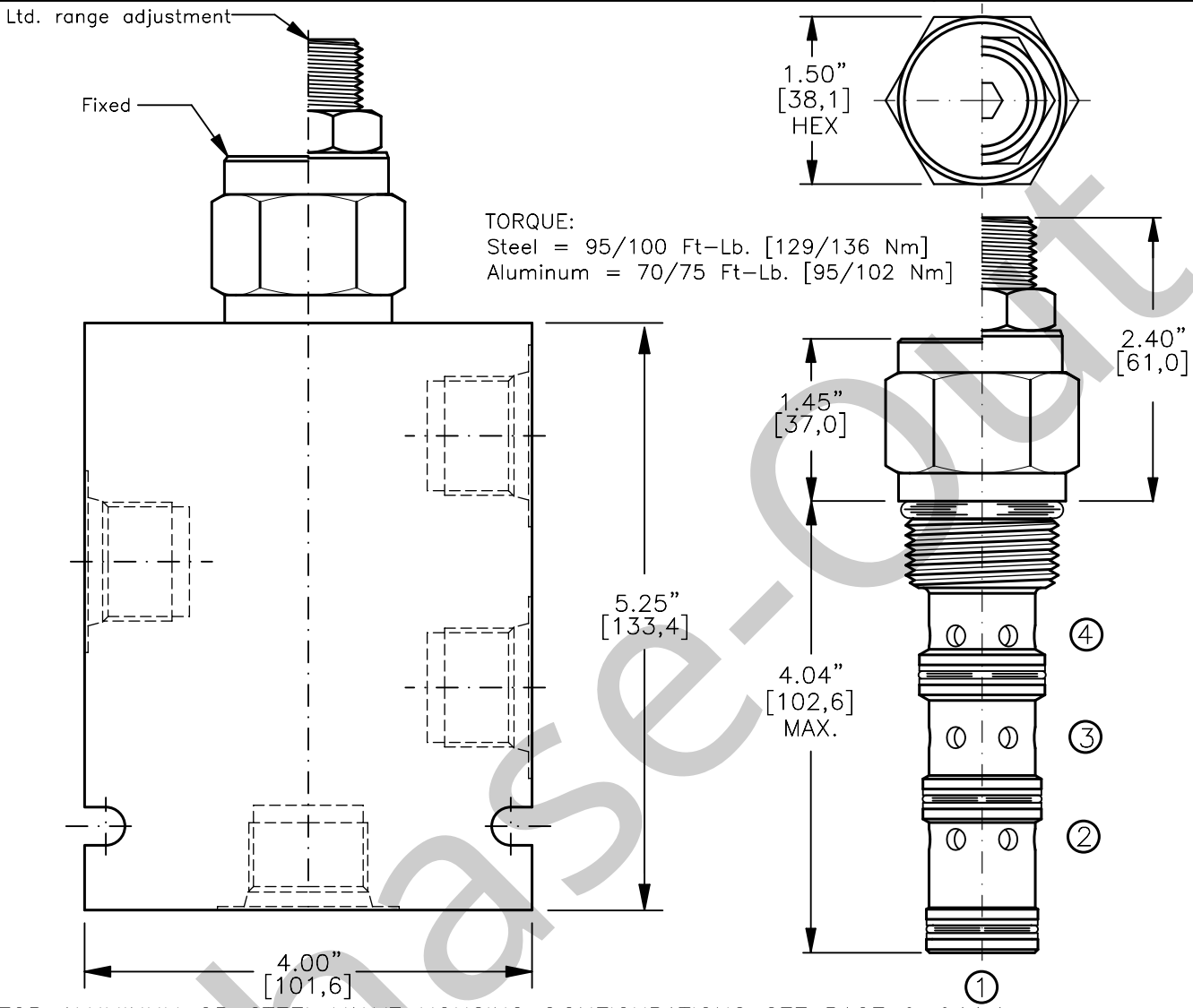

FOR ALUMINUM OR STEEL VALVE HOUSING CONFIGURATIONS SEE PAGE 0–044.1

PCEB–16–X–X–X–XXX

BASIC SIZE
16 = 1.312"–12 UNF

SEALS
N = BUNA "N"
V = VITON

ADJUSTMENT
F = FIXED (FACTORY SET)
S = ADJUSTING SCREW
C = CAPPED
T = TAMPERPROOF

PRESSURE BIAS SPRING
100 = 100 PSI (FIXED)
180 = 60–180 PSI (ADJ)

PORTS
0 = CARTRIDGE ONLY
06BX = G 3/4" BSPP
08BX = G 1" BSPP
12TX = SAE – #12
16TX = SAE – #16

"A" – ALUM. HOUSING
"S" – STEEL HOUSING

FOR ADJUSTMENT CONTROL OPTIONS SEE PAGE 0–050.0

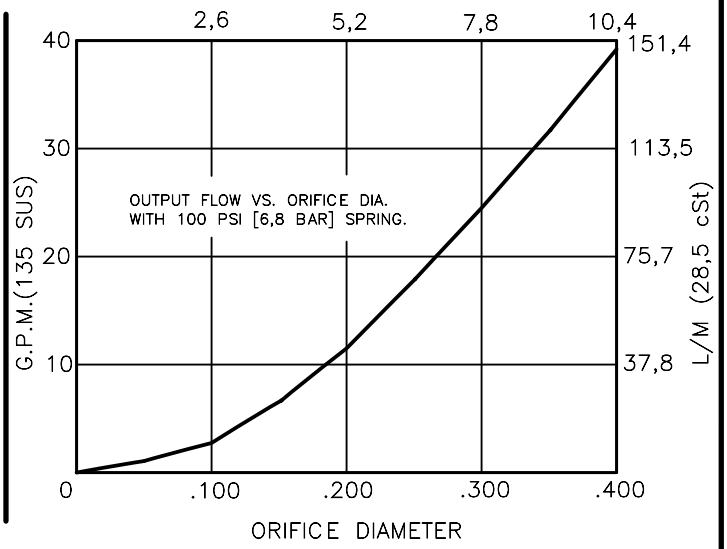

Phase-Out

BUCHER hydraulics

WWW.SUMY.IR

PRESSURE COMPENSATOR SPOOL TYPE, PRIORITY–TYPE, PRESSURE COMPENSATING ELEMENT.

DESCRIPTION

This unit is a DIRECT ACTING, SCREW IN CARTRIDGE STYLE, SPOOL TYPE, PRESSURE–COMPENSATING PRIORITY TYPE FLOW ELEMENT, intended for use with a remote fixed or variable orifice to yield a three–port (bypass–type), pressure–compensated, flow regulating hydraulic valve.

OPERATIONS

This valve maintains a constant flow rate at port 3 regardless of load pressure changes in a circuit downstream of port 3.
This cartridge compensator flow element maintains a constant differential pressure circuit point "P" to port 3 thereby regulating the hydraulic flow rate between the two points in the circuit. This is a priority type regulator, delivering pump flow first to port 3 , then by–passing excess flow to port 2. All ports can be fully pressurized.

FEATURES AND BENEFITS

Leakproof screw adjustment.
This valve has a fixed or an adjustable bias spring.
Adjustment screw can not be backed out of the valve.
Overset protection – spring can not go solid.
Hardened precision fitted spool & cage provides reliable, long life.
A unibody cage construction provides very low hysteresis and reliable operation.
All external carbon steel parts are plated for longer life against the elements.
Valve is available with fixed, screw, tamperproof and capped adjustments.
All cartridge valves are 100% functionally tested.

Phase-Out

BUCHER hydraulics

WWW.SUMY.IR

PRESSURE COMPENSATOR SPOOL TYPE, PRIORITY–TYPE, PRESSURE COMPENSATING ELEMENT.

SPECIFICATIONS

OPERATING PRESSURE: 5,000 PSI [350 Bar]
PROOF PRESSURE: 10,000 PSI [700 Bar]
INLET FLOW: 36.0 GPM [140 L/M]. Regulated see performance chart.
INTERNAL LEAKAGE: 5 cu.in./min. [85 cc/m].
DEFINITION OF CRACK: evident at 0.06 GPM [0.25 LPM]
VALVE HOUSINGS: 2500 PSI [175 Bar] = Aluminum – Anodized.
5000 PSI [350 Bar] = Steel – Unplated.
OPERATING TEMPERATURE: –40° to +250° F. [–40° to +120° C.]
OPERATING MEDIA: All general purpose hydraulic fluids such as MIL–H–5606, SAE–#10, SAE–#20, etc.
INSTALLATION: Use undercut in cavity (port 4 only) to obtain max rated flow.
FILTRATION: 25 microns or better.
SEAL KIT NUMBER: SKN–1642 for buna "N".
SKV–1642 for viton.
WEIGHT: 0.92 lb [.42 kg] cartridge only.
VALVE CAVITY: #C1640, See Page 0–044.0.

Phase-Out

info.el@bucherhydraulics.com www.bucherhydraulics.com/commoncavity

© 2015 by Bucher Hydraulics, Inc., 2545 Northwest Parkway, Elgin, Illinois 60124, USA
All rights reserved.
Data is provided for the purpose of product description only, and must not be construed as warranted characteristics in the legal sense. The information does not relieve users from the duty of conducting their own evaluations and tests. Because the products are subject to continual improvement, we reserve the right to amend the product specifications contained in this catalogue.

BUCHER
hydraulics
WWW.SUMY.IR

Stacking Pressure Relief Valve, size 2
Direct Acting
Series SDDA ...

- 250 bar, 25 l/min
- Direct acting, near zero-leakage poppet
- Functional parts in side-mounted body
- Fast response time
- 5 pressure ranges
- User-modifiable to hand knob or lockable hand knob adjustment
- with ISO 4401-02-01 interface

1. Description

Series SDDA ... -4 units are stack mounting pressure relief valves which relieve P, A, B or A and B to T. The ø 3 mm location pin on the actuator face of the valve prevents incorrect mounting. Valves are shipped as standard with screw adjustment. Alternatively, they can be supplied with adjustment by hand knob, or lockable hand knob.

2. Symbols

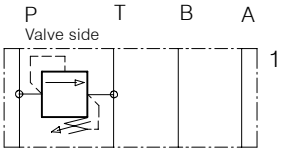

SDDA-P-4 ...

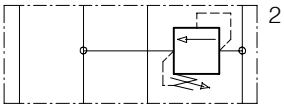

SDDA-A-4 ...

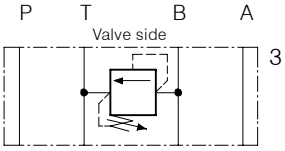

SDDA-B-4 ...

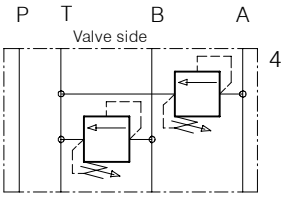

SDDA-AB-4 ...

3. Characteristics

Type		pressure relief slice valve
Design		direct acting seat valve
Mounting method		stack mounting
Size		ISO 4401-02-01 interface
Mass	kg	models ..P.. / ..A.. /..B.. = 0,77, model ..AB.. = 1,15
Mounting attitude		unrestricted
Flow direction		see symbols
Operating pressure	bar	... 250 in P, A and B; ... 160 in T
Pressure adjustment range	bar	code 25 = ... 250 code 16 = ... 160 code 10 = ... 100 code 04 = ... 040 code 02 = ... 020
Flow rate Qmax	l/min	25
Fluids		Hydraulic oils HL and HLP to DIN 51 524 other fluids - contact BUCHER
Fluid temperature range & ambient temp.	°C	-25 ... +80

Viscosity range	cSt	10 ... 650, recommended: 15 ... 250
Minimum fluid cleanless		18/14 to ISO 4406 /CETOP RP70H 8 ... 9 to NAS 1638

4. Performance characteristics

Oil viscosity 33 cSt

SDDA-..-4-25
Δp-Q characteristics

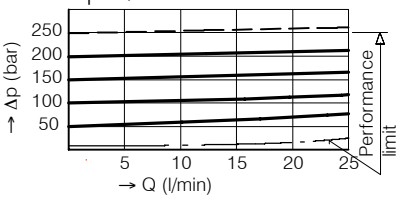

SDDA-..-4-16
Δp-Q characteristics

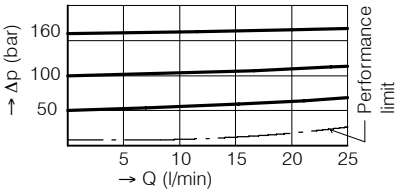

Rate of pressure change
when turning the adjusting screw:

SDDA-..-4-25: 1 turn	≙	app. 45 bar
SDDA-..-4-16: 1 turn	≙	app. 30 bar
SDDA-..-4-10: 1 turn	≙	app. 18 bar
SDDA-..-4-04: 1 turn	≙	app. 6 bar
SDDA-..-4-02: 1 turn	≙	app. 2,5 bar

SDDA-..-4-10
Δp-Q characteristics

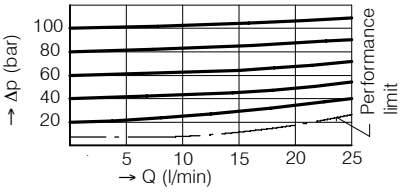

SDDA-..-4-04
Δp-Q characteristics

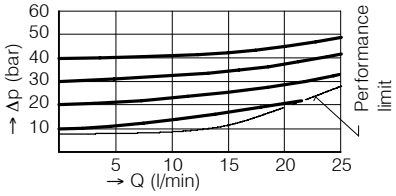

SDDA-..-4-02
Δp-Q characteristics

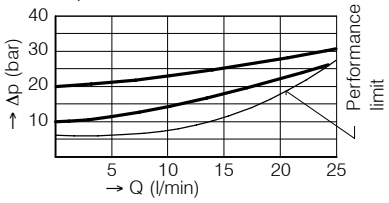

5. Dimensions

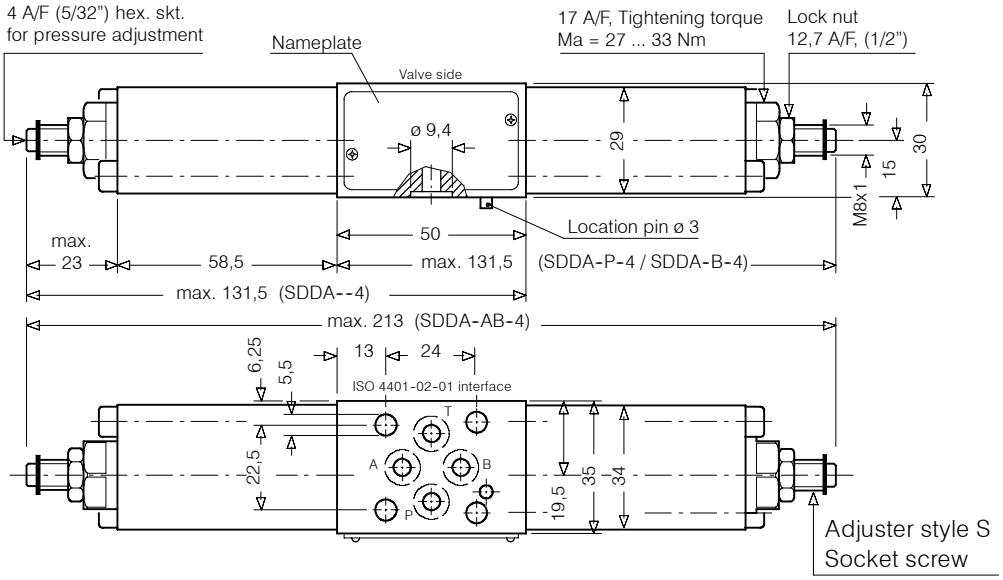

Adjuster styles / OPTIONAL

Conversion kit for styles S, H and Z5 - see related data sheets

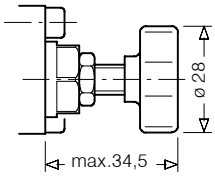

Adjuster style H
Hand knob

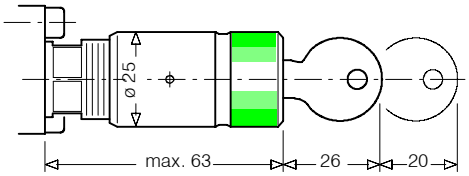

Adjuster style Z5, lockable hand knob type 2H
Complies with Volkswagen Factory specification BV 1.09

6. Schematic section

showing the relevant ports

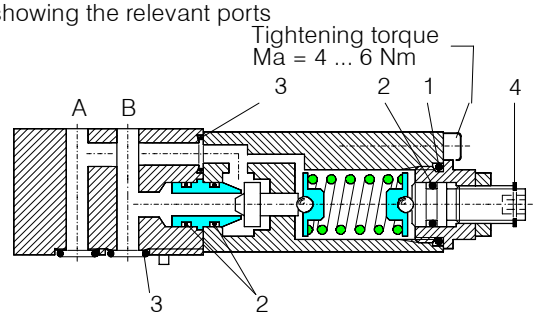

Seal kit no. DS-212, comprising *):

Itm.	Qty.	Qty.	Description	Size
1	2*)	1	O-ring no. 016	∅ 15,60 X 1,78 N90
2	6*)	3	O-ring no. 009	∅ 5,28 x 1,78 N90
3	6*)	5	O-ring no. 010	∅ 6,07 x 1,78 N90
4	2*)	1	Snap ring	Type SS ∅ 7

SDDA-B/-A/-P-4
SDDA-AB-4

7. Installation and servicing

All installation and servicing must be carried out with care, and by qualified personnel only. At installation, be sure to mount the valve the correct way up. Do not confuse the flat surface (directional valve side) and the surface with O-ring counterbores (actuator side). When changing seals, the new seals should be thoroughly oiled or greased before fitting them to the valve. Use the correct tightening torques when fitting the threaded housing and cap screws.

8. Model code key

Ex. S D D A - P - 4 - 25 - S - _ - 1

S = stacking valve
D = pressure relief function
D = direct acting
A ... Q = standard model per current data sheet
Z ... R = special features by arrangement
P = relief function P to T
A = relief function A to T
B = relief function B to T
AB = relief function A and B to T
4 = ISO 4401-02-02 interface
25 = pressure range ... 250 bar
16 = pressure range ... 160 bar
10 = pressure range ... 100 bar
04 = pressure range ... 40 bar
02 = pressure range ... 20 bar
S = with hex. skt. screw adjuster (standard)
H = with hand knob adjuster type H
Z = with lockable hand knob adjuster type Z5
(Blank) = Nitrile seals (standard
V = Viton seals
For special seals, please consult BUCHER
1 ... 9 = design number (omit when ordering)

9. Related data sheets

Old no.	New no.	
i - 17.00	400-P-015101-E	Procedure for changing the Adjuster Style
i - 30	400-P-030101-E	ISO 4401-02-01 interface

info.ch@bucherhydraulics.com www.bucherhydraulics.com

© 2015 by Bucher Hydraulics AG Frutigen, CH-3714 Frutigen
All rights reserved.
Data is provided for the purpose of product description only, and must not be construed as warranted characteristics in the legal sense. The information does not relieve users from the duty of conducting their own evaluations and tests. Because the products are subject to continual improvement, we reserve the right to amend the product specifications contained in this catalogue.

Stacking Pressure Relief Valve, size 3

Q_{max} = 80 l/min, p_{max} = 350 bar
Direct Acting Seat Valve Design
Series SDDB…

- With direct acting, zero leakage, 10 mm pressure relief cartridge DDPB-1C-10 ...
- 350 bar, 80 l/min on all ports
- with ISO 4401 / CETOP R35H size 3, NFPA D03, DIN 24 340 A6 interface

1. Description

Series SDDB ...-6 stack valves are used for independent pressure relief in the P-, A-, B-, T- or A- and B-lines. They are equipped with the direct acting pressure relief cartridge type DDPB-1C-10... The valves close with virtually zero leakage and thanks to their fast response they are particularly suitable for pressure relief duties in supply lines, for cross-line relief duties in service lines and for preload functions. The screw-in design of the cartridge valve provides for straight-forward, trouble-free maintenance. Interface sealing is by means of O-rings which are retained in counterbores in the valve body.

2. Symbols

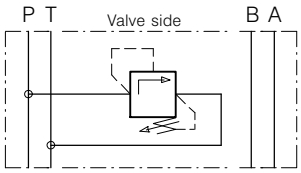

SDDB-P-6 ...

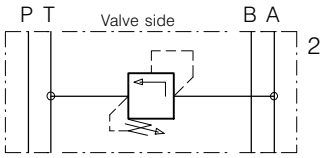

SDDB-A-6 ...

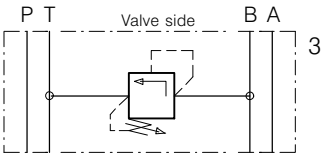

SDDB-B-6 ...

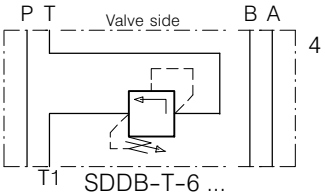

SDDB-T-6 ...

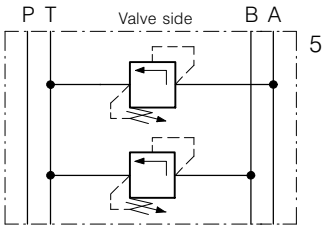

SDDB-AB-6 ...

3. Characteristics

Type		stacking pressure relief valve
Design		direct acting, seat type
Mounting method		stack mounting
Size		ISO 4401 size 3 interface
Mass	kg	SDDB-P / -A / -B / -T-6 = 1,50 SDDB-AB-6 = 2,40
Mounting attitude		unrestricted
Flow direction		see symbols
Operating pressure	bar	... 350 in P, A, B and T
Pressure adjustment range	bar	pressure range N = 180 ... 350 pressure range M = 080 ... 240 pressure range L = 010 ... 100
Flow rate Qmax	l/min	80 , see performance limits
Fluids		Hydraulic oils HL and HLP to DIN 51 524 other fluids - contact BUCHER
Fluid temperature range & ambient temp.	°C	-25 ... +80
Viscosity range	cSt	10 ... 650, recommended: 15 ... 250 mm2/s
Minimum fluid cleanless		20/18/15 to ISO 4406 : 1999

4. Performance characteristics

Oil viscosity 33 cSt

SDDB-...-6-SN
Δp-Q characteristics
P (A, B, T) ⇒ T

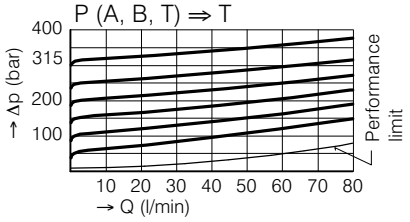

SDDB-...-6-SM
Δp-Q characteristics
P (A, B, T) ⇒ T

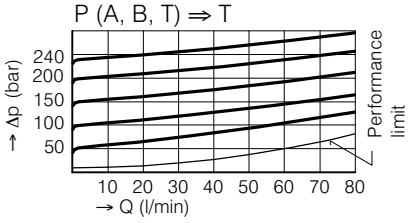

SDDB-...-6-SL
Δp-Q characteristics
P (A, B, T) ⇒ T

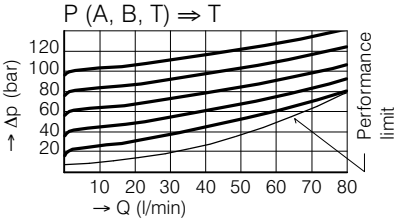

5. Dimensions

SDDB-P-6 ...
SDDB-A-6 ...
SDDB-B-6 ...
SDDB-T-6 ...

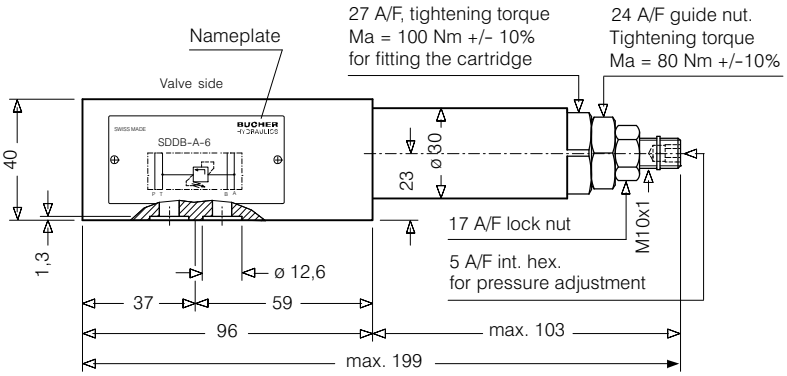

SDDB-AB-6 ...

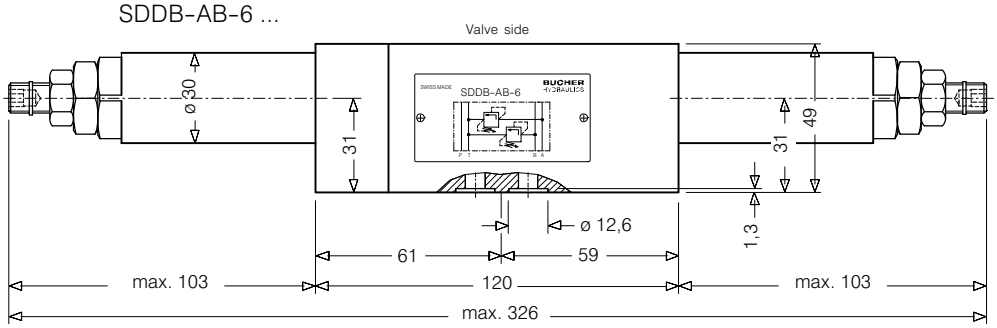

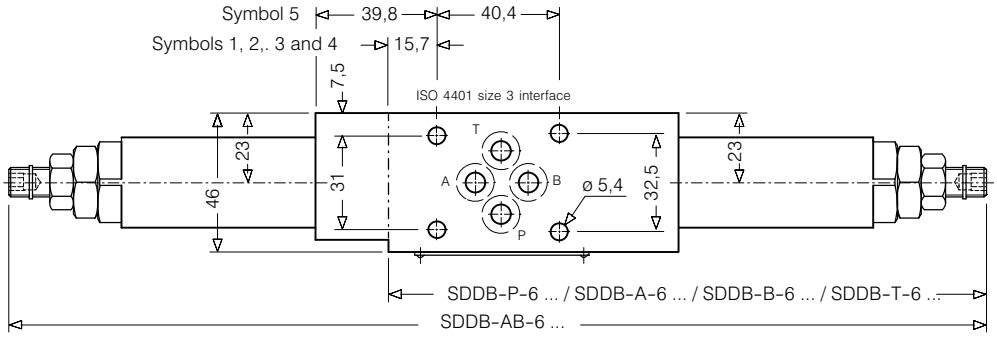

6. Schematic section

showing the relevant ports

z.B. SDDB-A-6 ...

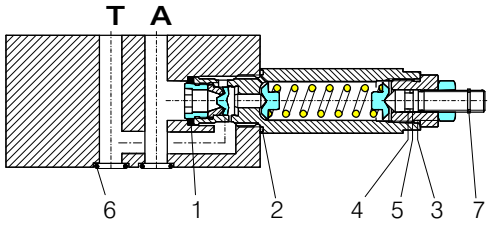

Seat kit no. DS-257, comprising *):

Itm.	Qty.	Qty.	Description	Size
1	1	2*)	Seal	∅ 22,1 / 16,1 x 2,5
2	1	2*)	O-ring no. 021	∅ 23,52 x 1,78 N90
3	1	2*)	O-ring no. 017	∅ 17,17 x 1,78 N90
4	1	2*)	O-ring no. 011	∅ 7,65 x 1,78 N90
5	1	2*)	Backup ring	∅ 6,1 x 1,45 x 1,4
6	4	4*)	O-ring no. 012	∅ 9,25x1,78 N90
7	1	2*)	Snap ring	∅ 9 Type SS

SDDB-AB-6 ...
SDDB-T/-B/-A/-P-6 ...

7. Installation and servicing

All installation and servicing must be carried out with care, and by qualified personnel only. At Installation, be sure to mount the valve with the correct faces contacting the adjacent units and with all interface connections lining up properly. Use the specified tightening torque when fitting the cartridge and guide nut. When changing seals, the new seals should by thoroughly oiled or greased before they are fitted.

8. Model code key

Ex. S D D B - A - 6 - S N _

S = stacking valve
D = pressure function
D = direct acting
A ... Q = standard model per current data sheet
Z ... R = special features by arrangement
P = function from P to T
A = function from A to T
B = function from B to T
T = function from T to T1
AB = function from A and B to T
6 = ISO 4401 size 3 interface
S = with hex. skt. screw adjuster
N = pressure range 180 ... 350 bar
M = pressure range 80 ... 240 bar
L = pressure range 10 ... 100 bar
(blank) = Nitrile seals (standard)
V = Viton seals
Special seals by arrangement

9. Related data sheets

Old no.	New no.	
i-00	400-P-010101-EN	Table of interface equivalents
i-31	400-P-030501-EN	DIN 24 340 size A6 interface
D-3.31	400-P-270101-EN	Direct acting pressure relief cartridge, 10 mm, series DDPB-1C-10 ...

info.ch@bucherhydraulics.com www.bucherhydraulics.com

© 2018 by Bucher Hydraulics AG Frutigen, CH-3714 Frutigen
All rights reserved.
Data is provided for the purpose of product description only, and must not be construed as warranted characteristics in the legal sense. The information does not relieve users from the duty of conducting their own evaluations and tests. Because the products are subject to continual improvement, we reserve the right to amend the product specifications contained in this catalogue.

Classification: 450300.305.320.355

D - 10.10 a

Stacking Pressure Relief Valve, size 5
Direct Acting Seat Valve Design

Series SDDB ...

100 l/min, 350 bar

- With direct acting, zero leakage, 10 mm pressure relief cartridge DDPB-1C-10... (see data sheet D-3.31 A)
- 350 bar, 100 l/min on all ports
- ISO 4401 / CETOP R35H size 5 NFPA D05, DIN 24 340 A10 interface

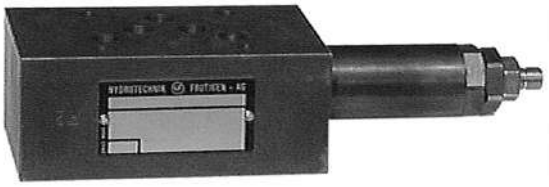

DIMENSIONS

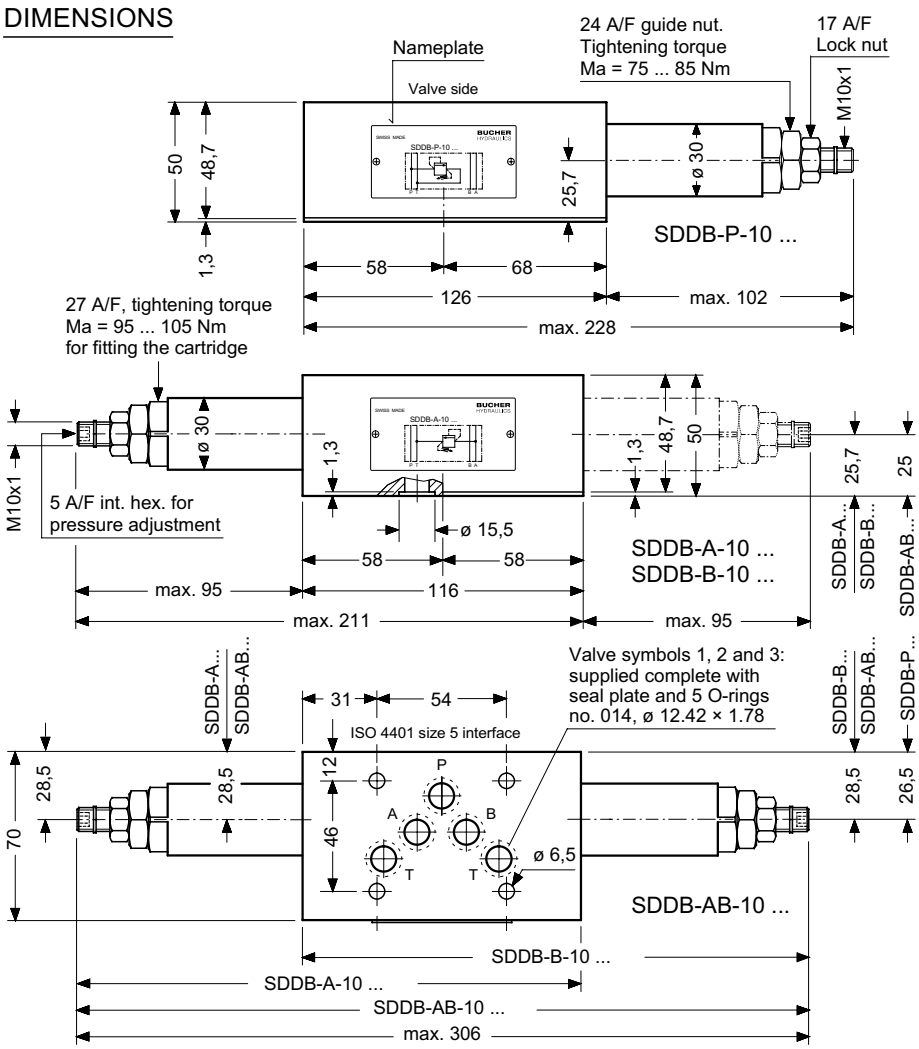

SYMBOLS

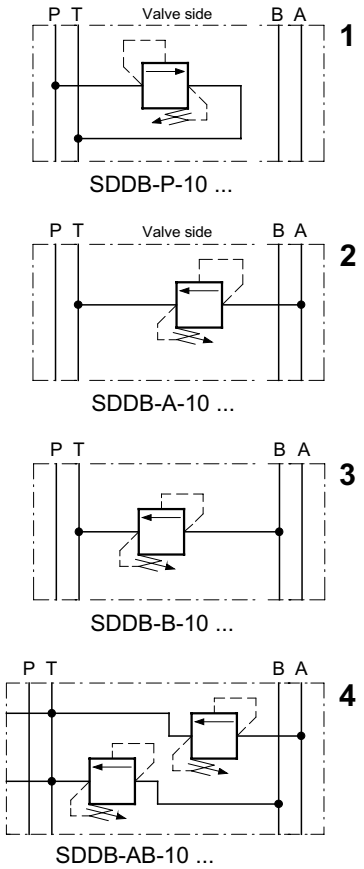

The SDDB-AB-10... valve has counterbores in the body to retain the 5 O-rings no. 014 (i.e. no seal plate).

Body stack height is 50 mm.

DESCRIPTION

Series SDDB...-10 stack valves are used for independent pressure relief in the P-, A-, B- or A- and B- lines.

They are equipped with the direct acting pressure relief cartridge type DDPB-1C-10... as shown on data sheet D-3.31A.

The valves close with virtually zero leakage and thanks to their fast response they are particularly suitable for pressure relief duties in supply lines, for cross-line relief in service lines and for preload functions.

Turning model SDDB-**A**-10... upside down about its short axis produces the SDDB-**B**-10... function, and vice versa. The side-mounted nameplate shows the correct orientation for the required function.

The screw-in design of the cartridge valve provides for straight-forward, trouble-free maintenance.

Interface sealing on models ..P.. / ..A.. / ..B.. is by means of a seal plate and 5 O-rings whereas on model ..AB.. it is by means of O-rings which are retained in counterbores in the valve body (no seal plate).

SCHEMATIC SECTION

showing the relevant ports
Ex. SDDB-A-10....

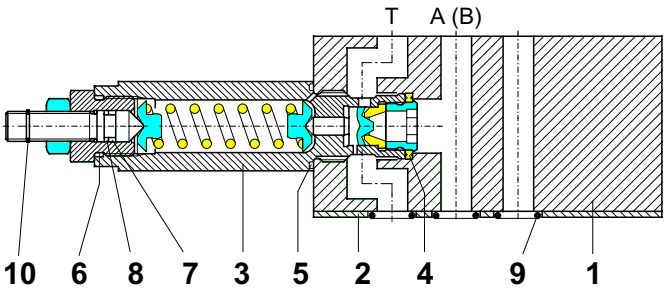

COMPONENTS / SERVICE PARTS

*) = part of seal kit no. DS-223
◢ = available as service part

It.		Qty.		Description		
1	1	-	-	Stacking body	50 x 70 x 126	type FB2-10
	-	1	-	Stacking body	50 x 70 x 116	type F2-10
	-	-	1	Stacking body	48,7 x 70 x 116	type J2-10
2 ◢	1	1	-	Seal plate	type DB-10	
3 ◢	1	1	2	Pressure relief cartridge	type DDPB-1C-10-S ...	
	1	1	1	Seal kit no. DS-223, comprising *):		
4 ◢	1	1	2*)	Seal	ø 22,1 x 16,1 x 2,5	
5	1	1	2*)	O-ring no. 021	ø 23,52 x 1,78	N90
6	1	1	2*)	O-ring no. 017	ø 17,17 x 1,78	N90
7	1	1	2*)	O-ring no. 011	ø 7,65 x 1,78	N90
8	1	1	2*)	Backup ring	ø 9,0 / 6,1 x 1,4	
9	5	5	5*)	O-ring no. 014	ø 12,42 x 1,78	N90
10	1	1	2*)	Snap ring	ø 9	type SS

SDDB-P-10 ...
SDDB-A-10 ... / SDDB-B-10 ...
SDDB-AB-10 ...

TO ORDER SERVICE PARTS, STATE:

- complete unit model code from the nameplate, including the design number
- data sheet number, including issue date
- part item number from above list
- part description from above list
- quantity required

INSTALLATION AND SERVICING

MUST BE CARRIED OUT WITH CARE, AND BY QUALIFIED PERSONNEL ONLY.

At installation, be sure to mount the valve with the correct faces contacting the adjacent units and with all interface connections lining up properly.

When changing seals, the new seals should be thoroughly oiled or greased before fitting them to the valve.

Use the correct tightening torques when fitting the cartridge and guide nut.

MAIN CHARACTERISTICS

Type	stacking pressure relief valve
Design	direct acting, seat type
Mounting method	stack mounting
Size	ISO 4401 size 5 interface
Mass	SDDB - P - 10 ... = 3,25 kg
	SDDB - A / -B - 10 ... = 3,05 kg
	SDDB - AB - 10 ... = 3,70 kg
Mounting attitude	unrestricted
Flow direction	see symbols
Operating pressure	... 350 bar in P, A, B and T
Pressure adjustment range	pressure range N = 180 ... 350 bar
	pressure range M = 80 ... 240 bar
	pressure range L = 10 ... 100 bar
Fluids	hydraulic oils HL and HLP to DIN 51 524
	other fluids - contact BHFRU
Min. fluid cleanliness	18/14 to ISO 4406 / CETOP RP70H
	8 ... 9 to NAS 1638
Fluid temperature range	- 25° ... +80° C
Ambient temperature	- 25° ... +80° C
Viscosity range	10 ... 650 cSt
	recommended: 15 ... 250 cSt
Flow rate Q max.	100 l/min (see performance limits)

PERFORMANCE DATA

Measured with oil viscosity 33 cSt

SDDB- ... -10-SN

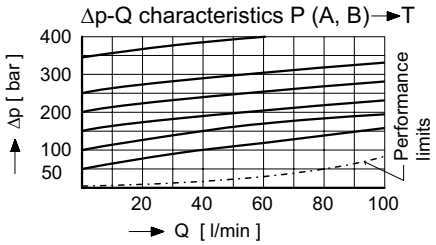

SDDB- ... -10-SM

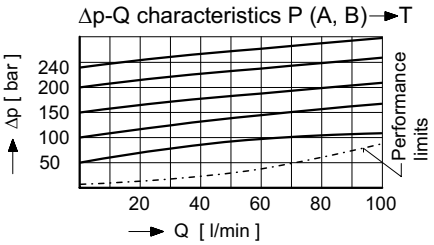

SDDB- ... -10-SL

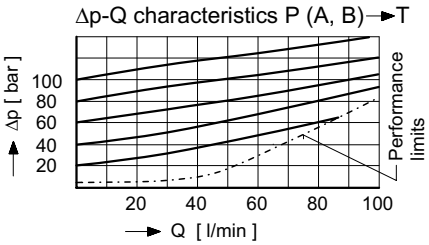

MODEL CODE KEY

Ex. S D D B - A - 10 - S N _

S	=	stacking valve
D	=	pressure function
D	=	direct acting
A ... Q	=	standard model per current data sheet
Z ... R	=	special features by arrangement
P	=	function from P to T
A	=	function from A to T
B	=	function from B to T
AB	=	function from A and B to T
10	=	ISO 4401 size 5 interface
S	=	with hex. skt. screw adjuster
N	=	pressure range 180 ... 350 bar
M	=	pressure range 80 ... 240 bar
L	=	pressure range 10 ... 100 bar
(blank)	=	Nitrile seals (standard)
V	=	Viton seals
Special seals by arrangement		

RELATED DATA SHEETS

Old no.:	New no.:	
i - 00	400-P-010'101-D-00	Table of interface equivalents
i - 41	400-P-050'101-D-00	DIN 24 340 size A10 interface
D - 3.31 A	400-P-270'101-D-00	Direct acting pressure relief cartridge, 10 mm, series DDPB-1C-10...
G - 45	400-P-810'901-D-00	Seal plate type DB-10

BUCHER HYDRAULICS

www.bucherhydraulics.com

Germany
Tel.: + 49 7742 8520
Fax: + 49 7742 7116
info.de@bucherhydraulics.com

France
Tel.: + 33 389 64 22 44
Fax: + 33 389 65 28 78
info.fr@bucherhydraulics.com

Netherlands
Tel.: + 31 7934 26 24 4
Fax: + 31 7934 26 28 8
info.nl@bucherhydraulics.com

UK
Tel.: + 44 2476 35 35 61
Fax: + 44 2476 35 35 72
info.uk@bucherhydraulics.com

USA
Tel.: + 1 262 605 82 80
Fax: + 1 262 605 82 78
info.wi@bucherhydraulics.com

Switzerland
Tel.: + 41 33 672 61 11
Fax: + 41 33 672 61 03
info.ch@bucherhydraulics.com

Italy
Tel.: + 39 0522 92 84 11
Fax: + 39 0522 51 32 11
info.it@bucherhydraulics.com

Austria
Tel.: + 43 6216 44 97
Fax: + 43 6216 44 97 4
info.at@bucherhydraulics.com

China
Tel.: + 86 10 68 31 41 08
Fax: + 86 10 68 31 41 21
info.bj@bucherhydraulics.com

Product Center (Elevator Hyd)
Tel.: + 41 41 757 03 33
Fax: + 41 41 757 05 00
info.nh@bucherhydraulics.com

SUBJECT TO CHANGE WITHOUT NOTICE

Stacking Pressure-Relief Valve, ISO Size 03

Q_{max} = 80 l/min, p_{max} = 350 bar
seated pilot stage, spool-type, main stage
Series SDVB…

- With two-stage 10 mm pressure relief cartridge Series DVPA-1-10...
- 350 bar, 80 l/min on all ports
- Optionally available with hand knob
- Also available with solenoid controlled two-pressure cartridge, series WUVPB-1...-10
- With ISO 4401 / CETOP R35H size 3, NFPA D03, DIN 24 340 A6 interface

1 Description

Series SDVB...-6 stack valves are used for independent pressure relief in the P-, A-, B-, T- or A- and B- lines. They are equipped with the two-stage pressure relief cartridge type DVPA-1-10... When closed, the valves shut off the relief path with spool-type leakage (see performance characteristics). The screw-in design of the cartridge valve provides for straight-forward, trouble-free maintenance. Interface sealing is by means of O-rings which are retained in counterbores in the valve body.

2 Symbols

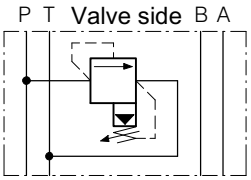

SDVB-P-6 ...

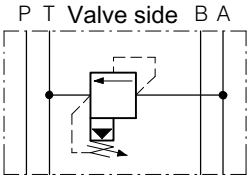

SDVB-A-6 ...

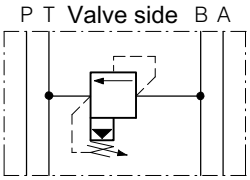

SDVB-B-6 ...

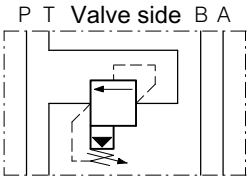

SDVB-T-6 ...

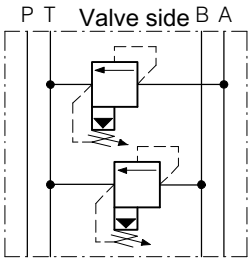

SDVB-AB-6 ...

3 Characteristics

Type		stacking pressure relief valve
Design		two-stage, sliding spool
Mounting method		stack mounting
Size		ISO 4401 size 3 interface
Mass	kg	SDVB-P / -A / -B / -T-6 = 1,37 SDVB-AB-6 = 2,15
Mounting attitude		unrestricted
Flow direction		see symbols

Reference: 400-P-303101-EN-01

Operating pressure	bar	... 350 in P, A, B and T
Pressure adjustment range	bar	pressure range N = 010 ... 350 pressure range M = 010 ... 210 pressure range L = 010 ... 065
Flow rate Qmax	l/min	80 , see performance limits
Fluids		Hydraulic oils HL and HLP to DIN 51 524 other fluids - contact BUCHER
Fluid temperature range & ambient temp.	°C	-25 ... +80
Viscosity range	cSt	10 ... 650, recommended: 15 ... 250
Minimum fluid cleanless		18/14 to ISO 4406 /CETOP RP70H 8 ... 9 to NAS 1638

4 Performance graphs

Oil viscosity 33 cSt

SDVB-P-6-..N
Δp-Q characteristics P⇒T

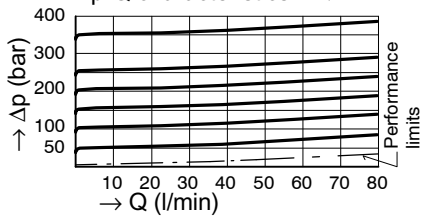

SDVB-P-6-..M
Δp-Q characteristics P⇒T

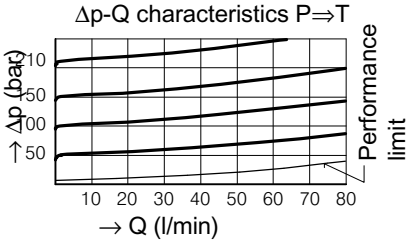

SDVB-P-6-..L
Δp-Q characteristics P⇒T

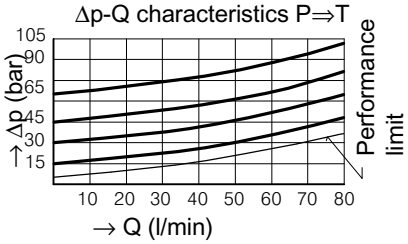

SDVB-A (-B, -T) -6-..N
Δp-Q characteristics A (B, T)⇒T

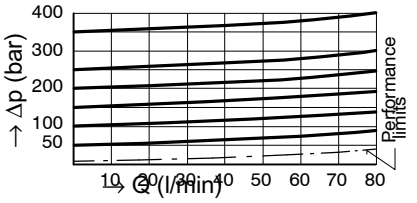

SDVB-A (-B, -T) -6-..M
Δp-Q characteristics A (B, T)⇒T

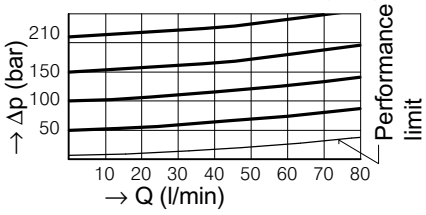

SDVB-A (-B, -T) -6-..L
Δp-Q char. A (B, T)⇒T

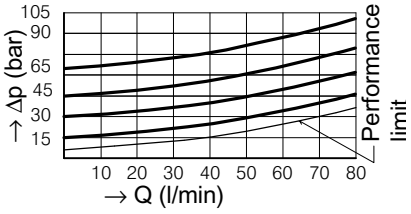

SDVB-AB-6-..N
Δp-Q characteristics A (B)⇒T

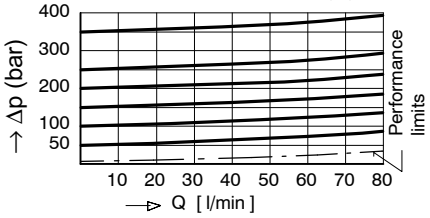

SDVB-AB-6-..M
Δp-Q characteristics A (B)⇒T

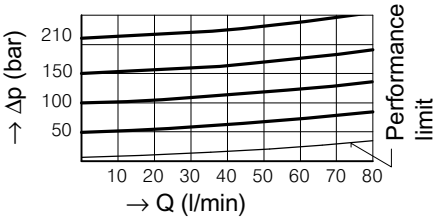

SDVB-AB-6-..L
Δp-Q characteristics A (B)⇒T

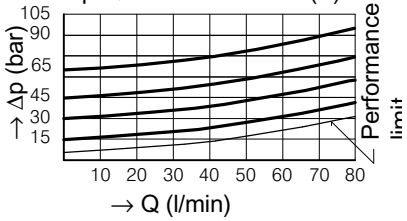

Leakage P (A, B, T)⇒T

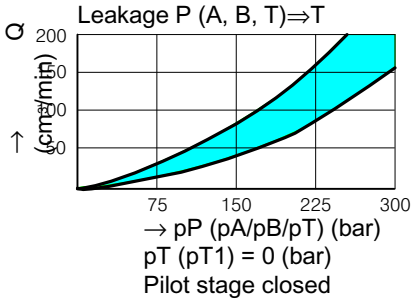

Rate of pressure change
when turning the adjusting screw

SDVB-..-6-..N:	1 turn ≙ approx. 60 (bar)
SDVB-..-6-..M:	1 turn ≙ approx. 38 (bar)
SDVB-..-6-..L:	1 turn ≙ approx. 13 (bar)

5 Dimensions

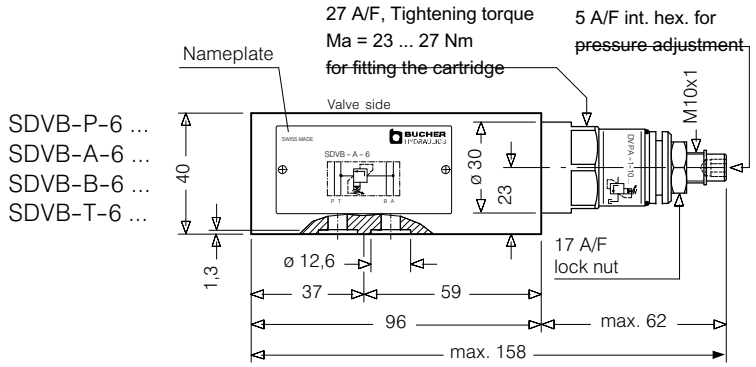

Adjuster style S
(standard)

SDVB-AB-6 ...

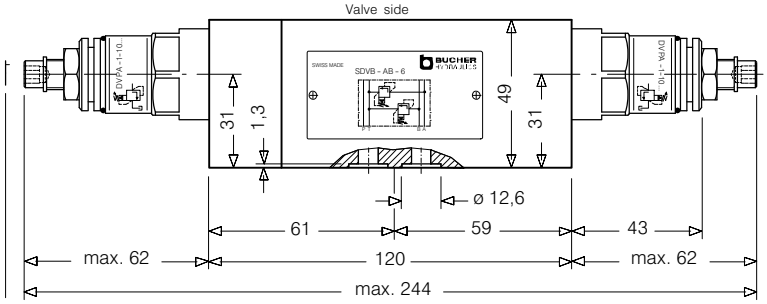

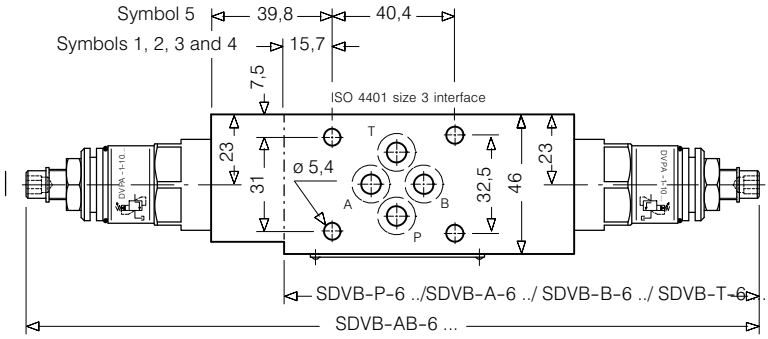

OPTIONAL

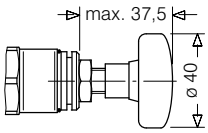

Adjuster style H
Hand knob (can be
fitted later by user)

6 Schematic section

showing the relevant ports

Ex. SDVB-A-6

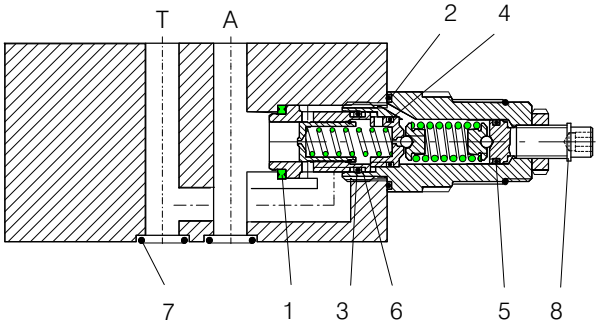

Seat kit no. DS-259, comprising *):

Itm.	Qty.	Qty.	Description	Size
1	1	2*)	Seal	∅ 22,1 / 16,1 x 2,5
2	1	2*)	O-ring no. 021	∅ 23,52 x 1,78 N90
3	1	2*)	O-ring no.	∅ 14,00 x 2,00 N90
4	1	2*)	O-ring no. 013	∅ 10,82 x 1,78 N90
5	1	2*)	O-ring no. 012	∅ 9,25 x 1,78 N90
6	2	4*)	Backup ring	∅ 13,7 x 1,4 x 1,15
7	4	4*)	O-ring no. 012	∅ 9,25 x 1,78 N90
8	1	2*)	Snap ring	∅ 9 Type SS

SDVB-AB-6 ...
SDVB-T/-B/-A/-P-6 ....

WWW.SUMY.IR

7 Installation and maintenance

All installation and maintenance must be carried out with care, and by qualified personnel only. At installation, be sure to mount the valve with the correct faces contacting the adjacent units and with all interface connections lining up properly. When changing seals, the new seals should be thoroughly oiled or greased before fitting them to the valve. Use the correct tightening torque when fitting the cartridge.

8 Model code key

Ex. S D V B - A - 6 - S N _

S = stacking valve
D = pressure function
V = two-stage
A ... Q = standard model per current data sheet
Z ... R = special features by arrangement
P = function from P to T
A = function from A to T
B = function from B to T
T = function from T to T1
AB = function from A and B to T
6 = ISO 4401 size 3 interface
S = with hex. skt. screw adjuster (standard)
H = with hand knob adjuster
N = pressure range 10 ... 350 bar
M = pressure range 10 ... 210 bar
L = pressure range 10 ... 65 bar
(blank) = Nitrile seals (standard)
V = Viton seals
Special seals by arrangement

9 Related data sheets

Old no.	New no.	
i-00	400-P-010101-E	Table of interface equivalents
i-31	400-P-030501-E	DIN 24 340 size A6 interface
D-4.31	400-P-280101-E	Two-stage pressure relief cartridge, 10 mm, series DVPA-1-10 ...

info.ch@bucherhydraulics.com www.bucherhydraulics.com

© 2020 by Bucher Hydraulics AG Frutigen, CH-3714 Frutigen
All rights reserved.
Data is provided for the purpose of product description only, and must not be construed as warranted characteristics in the legal sense. The information does not relieve users from the duty of conducting their own evaluations and tests. Because the products are subject to continual improvement, we reserve the right to amend the product specifications contained in this catalogue.

Classification: 450..

Stacking Pressure Relief Valve, 10 mm
Seated Pilot Stage, Spool-type Main Stage

Series SDVB ...

140 l/min, 350 bar

- With two-stage 10 mm pressure relief cartridge DVPA-1-10 ... (see data sheet D-4.31)
- 350 bar, 140 l/min on all ports
- Optionally available with hand knob or lockable hand knob adjuster
- Also available with solenoid controlled two-pressure cartridge WUVPB-1...-10
- Mounting interface to ISO 4401 CETOP R35H size 5 NFPA D05, DIN 24 340 A10

DIMENSIONS

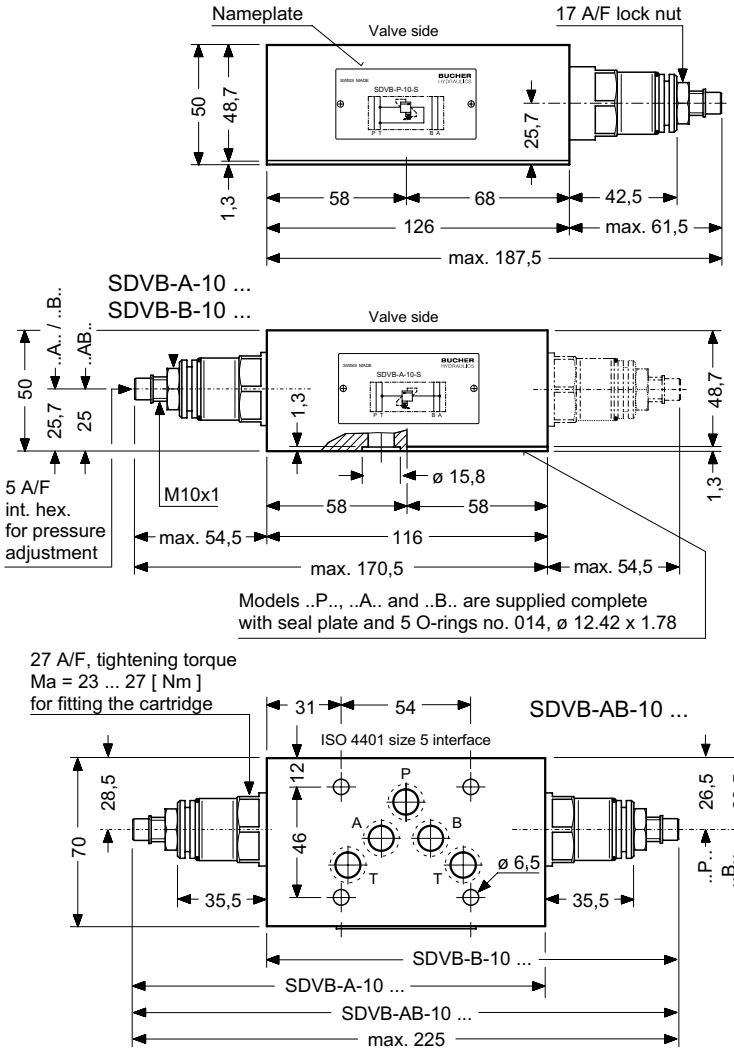

Adjuster style
S
(standard)

OPTIONS

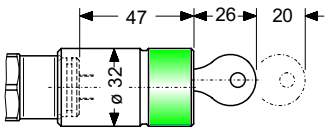

Adjuster style **Z4**
Lockable hand knob
type 2H complies with
Volkswagen Factory
Specification BV 1.09
(factory option only)

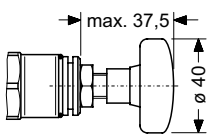

Adjuster
style **H**
Hand knob
(can be fitted
later by user)

SYMBOLS

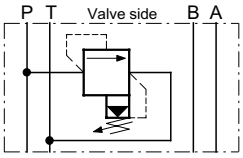

1 SDVB-P-10 ...

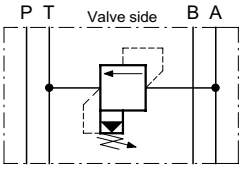

2 SDVB-A-10 ...

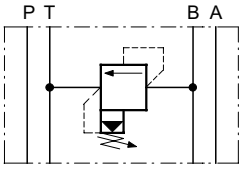

3 SDVB-B-10 ...

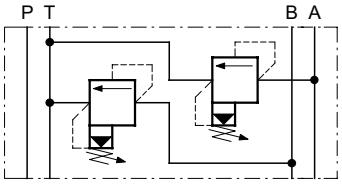

4 SDVB-AB-10 ...

DESCRIPTION

Series SDVB...-10 stack valves are used for independent pressure relief in the P-, A-, B- or A- and B- lines.
They are equipped with the two-stage pressure relief cartridge type DVPA-1-10... as shown on data sheet D-4.31.
When closed, the valves shut off the relief path with spool-type leakage (see PERFORMANCE DATA).
Turning model SDVB-**A**-10... upside down about its short axis produces the SDVB-**B**-10... function and vice versa.
The side-mounted nameplate indicates the correct orientation for the required function.
The screw-in design of the cartridge valve provides for straight-forward, trouble-free maintenance.
Interface sealing on models ..P.. / ..A.. / ..B.. is by means of a seal plate and 5 O-rings whereas on model ..AB.. it is by means of O-rings which are retained in counterbores in the valve body (no seal plate).

SCHEMATIC SECTION

showing the relevant ports

Ex. SDVB-A-10 ...

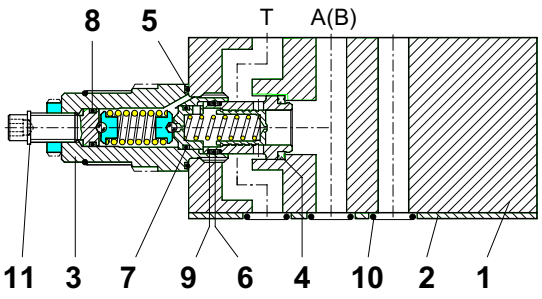

COMPONENTS / SERVICE PARTS

*) = part of seal kit no. DS-219
◢ = available as service part

It.		Qty.			Description		
1		1	-	-	Stacking body	48,7 x 70 x 116	type FB2-10
		-	1	-	Stacking body	48,7 x 70 x 116	type F2-10
		-	-	1	Stacking body	50 x 70 x 116	type J2-10
2	◢	1	1	-	Seal plate	type DB-10	
3	◢	1	1	2	Pressure relief cartridge	type DVPA-1-10 ...	
	◢	1	1	1	Seal kit no. DS-219, comprising *):		
4		1	1	2*)	Seal	ø 22,1 x 16,5 x 2,5	
5		1	1	2*)	O-ring no. 021	ø 23,52 x 1,78	N90
6		1	1	2*)	O-ring	ø 14 x 2	N90
7		1	1	2*)	O-ring no. 013	ø 10,82 x 1,78	N90
8		1	1	2*)	O-ring no. 012	ø 9,25 x 1,78	N90
9		2	2	4*)	Backup ring	ø 13,7 x 1,4 x 1,15	FI 0751
10		5	5	5*)	O-ring no. 014	ø 12,42 x 1,78	N90
11		1	1	2*)	Snap ring	ø 9	type SS

SDVB - P - 10 ...
SDVB - A - 10 ... / SDVB - B - 10 ...
SDVB - AB - 10 ...

TO ORDER SERVICE PARTS, STATE:

- complete unit model code from the nameplate, including the design number
- data sheet number, including issue date
- part item number from above list
- part description from above list
- quantity required

INSTALLATION AND SERVICING

MUST BE CARRIED OUT WITH CARE, AND BY QUALIFIED PERSONNEL ONLY

At Installation, be sure to mount the valve with the correct faces contacting the adjacent units and with all interface connections lining up properly.

When changing seals, the new seals should be thoroughly oiled or greased before fitting them to the valve.

Use the correct tightening torque when fitting the cartridge.

MAIN CHARACTERISTICS

Type	stacking pressure relief valve
Design	two-stage, seated pilot, sliding spool
Mounting method	stack mounting
Size	ISO 4401 size 5 interface
Mass	SDVB - P-10 ... = 3,2 kg
	SDVB - A-10 ... / - B-10 ... = 3,0 kg
	SDVB - AB-10 ... = 3,7 kg
Mounting attitude	unrestricted
Flow direction	see symbols
Operating pressure	... 350 bar in P, A, B and T
Pressure adjustment range	pressure range N = 10 ... 350 bar
	pressure range M = 10 ... 210 bar
	pressure range L = 10 .... 65 bar
Fluids	hydraulic oils HL and HLP
	to DIN 51 524
	other fluids - contact BHFRU
Min. fluid cleanliness	18/14 to ISO 4406 / CETOP RP70H
	8 ... 9 to NAS 1638
Fluid temperature range	- 25° ... +80° C
Ambient temperature	- 25° ... +80° C
Viscosity range	10 ... 650 cSt
	recommended 15 ... 250 cSt
Flow range Q	1 ... 140 l/min (see performance data)

PERFORMANCE DATA

Measured with oil viscosity 33 cSt

SDVB-P-10-..N
Δp - Q characteristics P → T

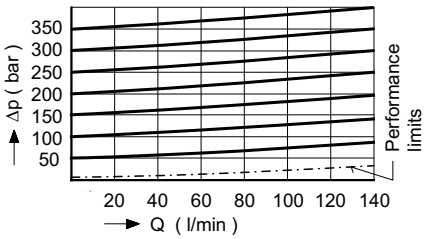

SDVB-P-10-..M
Δp - Q characteristics P → T

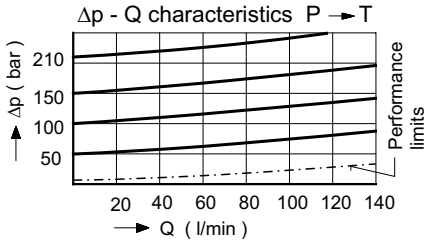

SDVB-P-10-..L
Δp - Q characteristics P → T

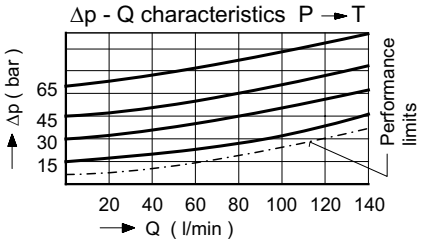

SDVB-..-10-..N
Δp-Q characteristics A → T (B → T)

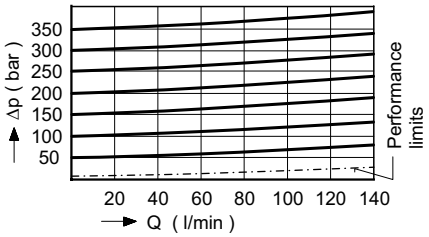

SDVB-..-10-..M
Δp-Q characteristics A → T (B → T)

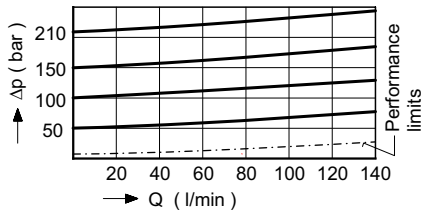

SDVB-..-10-..L
Δp-Q characteristics A → T (B → T)

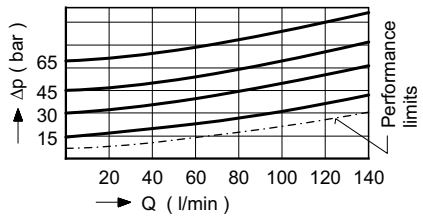

Leakage P (A, B) → T

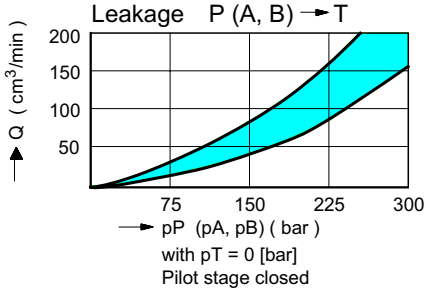

Rate of pressure change
when turning the adjuster screw:

SDVB-..-10-..N:	1 turn ≙ approx. 60 bar
SDVB-..-10-..M:	1 turn ≙ approx. 38 bar
SDVB-..-10-..L:	1 turn ≙ approx. 13 bar

MODEL CODE KEY

Ex. S D V B - A - 10 - S N _

S = stacking valve
D = pressure relief function
V = two-stage
A ... Q = standard model per current data sheet
Z ... R = special features by arrangement
P = function from P to T
A = function from A to T
B = function from B to T
AB = function from A and B to T
10 = ISO 4401 size 5 interface
S = with hex. skt. screw adjuster (standard)
H = with hand knob adjuster
Z = with lockable hand knob adjuster type Z4
N = pressure range 10 ... 350 bar (**N**ormal)
M = pressure range 10 ... 210 bar (**M**edium)
L = pressure range 10 .... 65 bar (**L**ight)
(blank) = Nitrile seals (standard)
V = Viton seals
Special seals by arrangement

RELATED DATA SHEETS

Old no.:	New no.:	
i - 00	400-P-010'101-D-00	Table of interface equivalents
i - 41	400-P-059'101-D-00	DIN 24 340 size A10 interface
D - 4.31	400-P-280'101-D-00	Two-stage pressure relief cartridge, 10 mm, series DVPA-1-10 ...
G - 45	400-P-810'901-D-00	Seal plate type DB-10

BUCHER HYDRAULICS
www.bucherhydraulics.com

Germany
Tel.: + 49 7742 8520
Fax: + 49 7742 7116
info.de@bucherhydraulics.com

France
Tel.: + 33 389 64 22 44
Fax: + 33 389 65 28 78
info.fr@bucherhydraulics.com

Netherlands
Tel.: + 31 7934 26 24 4
Fax: + 31 7934 26 28 8
info.nl@bucherhydraulics.com

UK
Tel.: + 44 2476 35 35 61
Fax: + 44 2476 35 35 72
info.uk@bucherhydraulics.com

USA
Tel.: + 1 262 605 82 80
Fax: + 1 262 605 82 78
info.wi@bucherhydraulics.com

Switzerland
Tel.: + 41 33 672 61 11
Fax: + 41 33 672 61 03
info.ch@bucherhydraulics.com

Italy
Tel.: + 39 0522 92 84 11
Fax: + 39 0522 51 32 11
info.it@bucherhydraulics.com

Austria
Tel.: + 43 6216 44 97
Fax: + 43 6216 44 97 4
info.at@bucherhydraulics.com

China
Tel.: + 86 10 68 31 41 08
Fax: + 86 10 68 31 41 21
info.bj@bucherhydraulics.com

Product Center (Elevator Hyd)
Tel.: + 41 41 757 03 33
Fax: + 41 41 757 05 00
info.nh@bucherhydraulics.com

SUBJECT TO CHANGE WITHOUT NOTICE

Pressure-Relief Valve, ISO Size 07

Q_{max} = 300 l/min, p_{max} = 350 bar
Sandwich design, manually operated, seated pilot stage
Series SDVA…

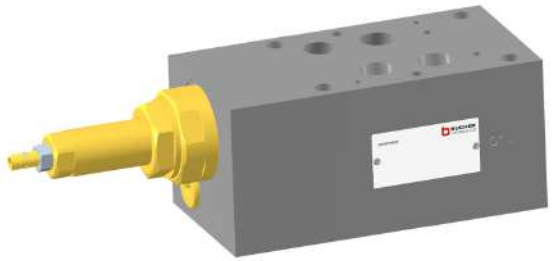

- With cartridge valve, type DVPB-1-16…
- Interface to ISO 4401-07-07
- Bypass function in the PT, AT, or BT connection
- Internal pilot-oil drain to port T
- 4 pressure ranges available
- High flow rates
- Excellent stability over the whole pressure and flow range
- Responsive pressure adjustment
- Available with hand-knob or tamper-proof cap
- External cartridge parts are zinc plated and chromited (CrVI-free)

1 Description

Series SDVA… sandwich valves are high performance pressure-relief valves with a size 07 interface to ISO 4401-07-07. The main components of the valves are a sandwich body (stack-mounting body) and the screw-in cartridge (type DVPB-1-16…). The pressure-relief cartridges have a seated pilot stage, and the main stage is designed on the sliding-spool principle. In the closed condition, they shut off the connection to tank (spool-type closure). Four pressure ranges are available for each of the bypass functions in PT, AT or BT. The pressure is set by means of an adjusting screw or a hand-knob on the pilot cartridge. To safeguard pressure settings, the adjusting spindle can be sealed with a tamper-proof cap. These sandwich valves are used to limit the system pressure (pressure in lines P, A or B) in mobile and industrial applications. All external parts of the cartridge are zinc-nickel plated according to DIN EN ISO 19 598 and are thus suitable for use in the harshest operating environments. The sandwich body is sealed at its manifold side (the connections side) by means of O-rings fitted in counterbores.

2 Technical data

General characteristics	Description, value, unit
Designation	pressure-relief valve
Design	sandwich design, manually operated, seated pilot stage
Mounting method	4 x ∅ 10.5 holes for M10 cap screws 2 x ∅ 7 holes for M6 cap screws
Size	size 07 interface to ISO 4401-07-07 / DIN 24 340 A16
Weight	8.55 kg
Mounting attitude	unrestricted
Ambient temperature range	-25 °C … +80 °C
Surface corrosion protection	without

Hydraulic characteristics		Description, value, unit
Maximum operating pressure	- in ports P, A, B - in port T	350 bar 250 bar
Flow range		5…300 l/min
Nominal pressure ranges		…100 bar, …160 bar, …250 bar, …350 bar
Flow direction		see symbol
Hydraulic fluid		HL and HLP mineral oil to DIN 51 524; for other fluids, please contact BUCHER
Hydraulic fluid temperature range		-25 °C … +80 °C
Viscosity range		10…650 mm^2/s (cSt), recommended 15...250 mm^2/s (cSt)
Minimum fluid cleanliness Cleanliness class to ISO 4406 : 1999		class 20/18/15

3 Symbol

Function in PT, AT or BT (bypass model)

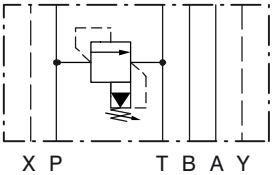

SDVA-P-16…

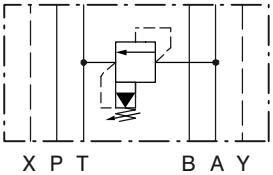

SDVA-A-16…

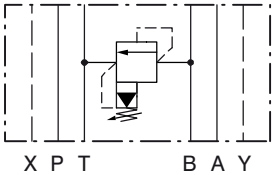

SDVA-B-16…

4 Performance graphs

IMPORTANT!
Detailed performance data and other hydraulic characteristics can be found in the data sheet for the pressure-relief cartridge that is fitted (data sheet ref. no. 400-P-285301-E).

ATTENTION!
The performance figures in the data sheet for the cartridge valve refer just to the cartridge itself. Take into account the additional pressure drop in the body into which it is fitted.

5 Dimensions & sectional view

With adjusting screw “S”

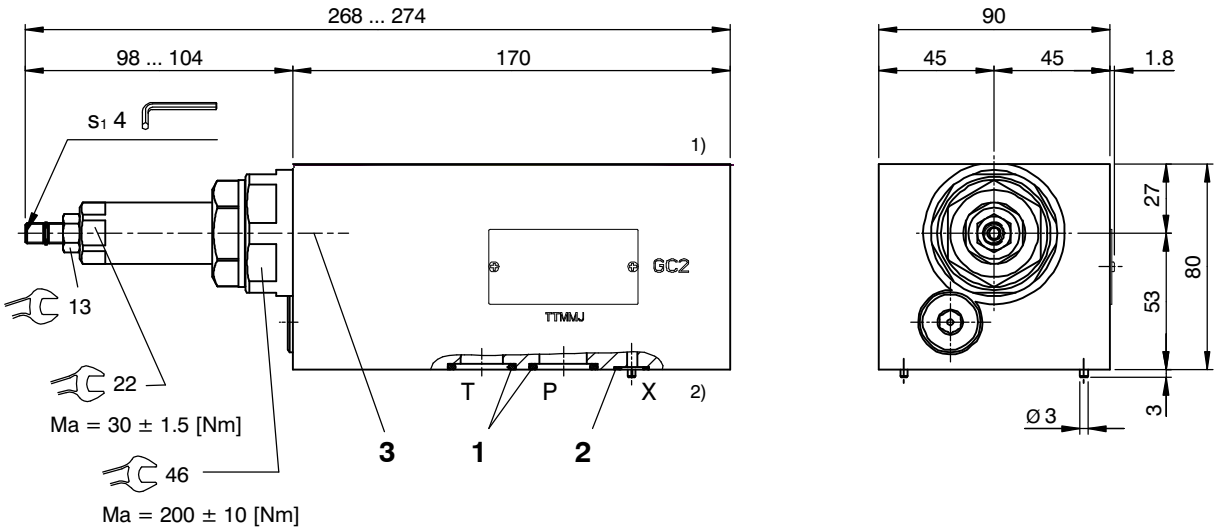

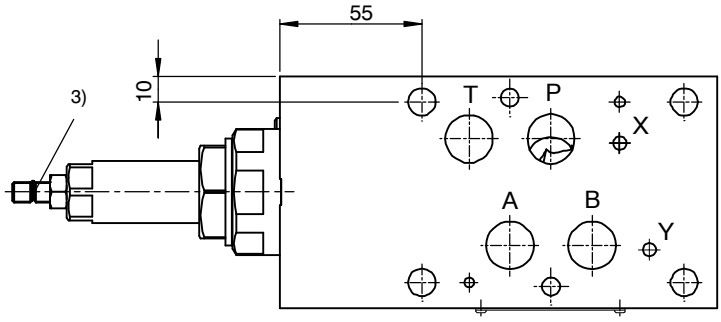

1) Valve side

2) Connections side (manifold side)

With hand-knob adjuster “H”

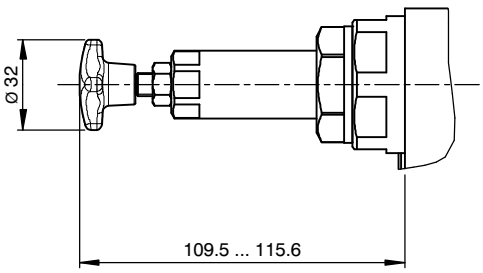

Adjusting screw with tamper-proof cap
(order separately in plain language)

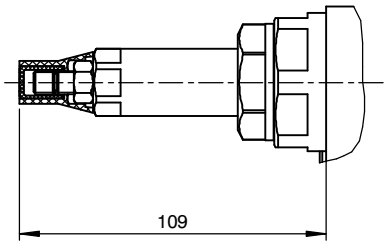

WWW.SUMY.IR

6 Installation information

IMPORTANT!
When installing the valve, make sure that the mating face (the manifold interface) aligns with the valve interface. Do not confuse the sandwich valve's manifold side and directional-valve side. Set the required pressure with the adjusting screw (s1). After you have set the valve, lock the adjusting screw with the lock nut.

ATTENTION!
Only qualified personnel with mechanical skills may carry out any maintenance work. Generally, the only work that should ever be undertaken is to check, and possibly replace, the seals. When changing seals, oil or grease the new seals thoroughly before fitting them.

IMPORTANT!
Valve settings can be sealed by fitting the tamper-proof cap. To fit the cap, the snap ring [3] has to be removed. Subsequent adjustment is only possible by destroying the tamper-proof cap.

NBR seal kit no. DS-319-N [4]

Item	Qty.	Description
1	4	O-ring no. 118 ∅ 21.89 x 2.62 N90
2	2	O-ring no. 110 ∅ 9,19 x 2,62 N90
3	1	NBR seal kit no. DS-344-N for pressure-relief cartridge DVPB-1…

IMPORTANT!
[4] Seal kit with FKM (Viton) seals, no. DS-319-V

7 Ordering code

Ex. S DV A - P - 16 - 35 - S _

S	=	sandwich design
DV	=	pressure-relief cartridge, two stage
A ... Q	=	standard model - see relevant data sheets
Z ... R	=	special features - please consult BUCHER
P	=	function from P to T
A	=	function from A to T
B	=	function from B to T
16	=	ISO size 07 interface
35	=	pressure range …350 bar
25	=	pressure range …250 bar
16	=	pressure range …160 bar
10	=	pressure range …100 bar
S	=	screw adjuster (**standard**)
H	=	hand-knob adjuster
(blank)	=	NBR (Nitrile) seals (**standard**)
V	=	FKM (Viton) seals (special seals - please contact BUCHER)

IMPORTANT!
When required, the tamper-proof cap (the adjustment seal) must be ordered separately in plain language.

8 Related data sheets

Reference	(Old no.)	Description
400-P-070101	(i-51)	Size 07 interface to ISO 4401-07-07
400-P-285301	(D-5.31)	Pressure-relief cartridge, size 16, series DVPB-1-16…
400-P-260111	(D-2.151)	Pilot pressure-relief cartridge, size 4, series DDPC-1L…

Notes

info.ch@bucherhydraulics.com www.bucherhydraulics.com

© 2022 by Bucher Hydraulics AG Frutigen, CH-3714 Frutigen
All rights reserved.
Data is provided for the purpose of product description only, and must not be construed as warranted characteristics in the legal sense. The information does not relieve users from the duty of conducting their own evaluations and tests. Because the products are subject to continual improvement, we reserve the right to amend the product specifications contained in this catalogue.

Classification: 430.305.300.330.330.355

Stacking Pressure-Relief Valve, ISO Size 03

Q_{max} = 80 l/min (21 gpm), p_{max} = 350 bar (5000 psi)
Sandwich design, electrically operated, seated pilot stage
Series SWUVPOD-1…, SWUVPLD-1…

- With cartridge valve, type WUVP_C-1…-10…
- Interface to ISO 4401-03-02
- 2-pressure switching HI/LO
- Bypass function in the PT, AT, BT or ABT connection
- Internal pilot-oil drain to port T
- 4 pressure ranges available
- Excellent stability over the whole pressure and flow range
- External cartridge parts are zinc-nickel plating
- The slip-on coil can be rotated, and it can be replaced without opening the hydraulic envelope
- Various plug-connector systems and voltages are available

1 Description

Series SWUVP_D-1… sandwich valves are high performance, electrically operated pressure-relief valves with a size 0_ interface to ISO 4401-03-02. The main components of the valves are a sandwich body (stack-mounting body) and the screw-in cartridge (type WUVP_C-1…). They have a seated pilot stage and a spool-type main stage. These sandwich valves are used in mobile and industrial applications. All external parts of the cartridge are zinc-nickel plated according to DIN EN ISO 19 598 and are thus suitable for use in the harshest operating environments. The slip-on coils can be replaced without opening the hydraulic envelope and can be positioned at any angle through 360°. The sandwich body is sealed at its manifold side (the connections side) by means of O-rings fitted in counterbores.

2 Technical data

General characteristics		Description, value, unit	
Designation		Stacking-pressure-relief valve	
Design		sandwich design, electrically operated, seated pilot stage	
Mounting method		4 x ∅ 5,4 holes for M5 cap screws	
Size		size 03 interface to ISO 4401-03-02 / DIN 24 340 A6	
Weight	function one-sided function two-sided	1,65 kg 3.30 kg	(3.66 pds) (7.30 pds)
Mounting attitude		unrestricted	
Ambient temperature range		-30 °C… +50 °C	(-22 °F… +122 °F)
Surface corrosion protection		without	

Hydraulic characteristics		Description, value, unit	
Maximum operating pressure	- in ports P, A, B - in port T	350 bar 250 bar	(5000 psi) (3600 psi)
Maximum flow rate		80 l/min	(21 gpm)
Nominal pressure ranges		…100 bar, …160 bar, …250 bar, …350 bar (…1400 psi, …2300 psi, …3600 psi, …5000 psi)	
Flow direction		see symbol	
Hydraulic fluid		HL and HLP mineral oil to DIN 51 524; for other fluids, please contact BUCHER	

Hydraulic characteristics	Description, value, unit
Hydraulic fluid temperature range	-30 °C… +80 °C (-22 °F… +176 °F)
Viscosity range	10…500 mm^2/s (cSt), recommended 15...250 mm^2/s (cSt)
Minimum fluid cleanliness Cleanliness class to ISO 4406 : 1999	class 20/18/15

Electrical characteristics	Description, value, unit
Supply voltage	12 V DC, 24 V DC 115 V AC, 230 V AC (50 … 60 Hz)
Supply voltage tolerance	± 10 %
Nominal power consumption	V DC = 27 W V AC = 25 W
Relative duty cycle	100 %
Protection class to ISO 20 653 / EN 60 529	IP 65 / IP 67 / IP 69K, see “Ordering code” (with appropriate mating connector and proper fitting and sealing)
Electrical connection	DIN EN 175301-803, 3-pin 2 P+E (standard) for other connectors, see “Ordering code”

3 Symbol

Function in PT, AT, BT or ABT (bypass model)

SWUVP_D-1…-PT-6…

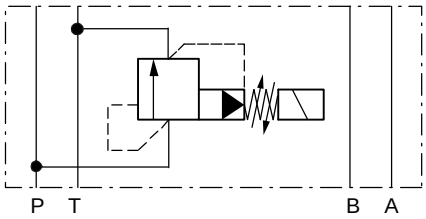

SWUVP_D-1…-AT-6…

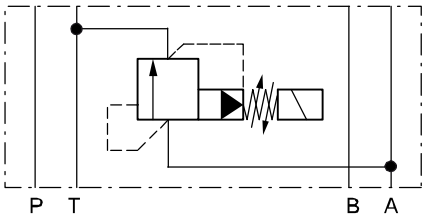

SWUVP_D-1…-BT-6…

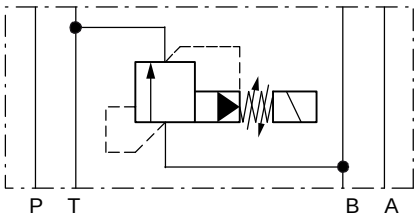

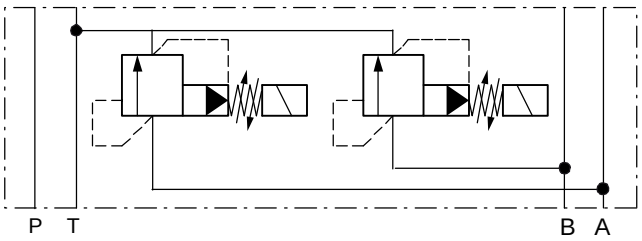

SWUVP_D-1…-ABT-6…

4 Performance graphs

IMPORTANT!
Detailed performance data and other hydraulic characteristics can be found in the data sheet for the pressure-relief cartridge that is fitted (data sheet ref. no. 400-P-290101-E).

ATTENTION!
The performance figures in the data sheet for the cartridge valve refer just to the cartridge itself. Take into account the additional pressure drop in the body into which it is fitted.

5 Dimensions & sectional view

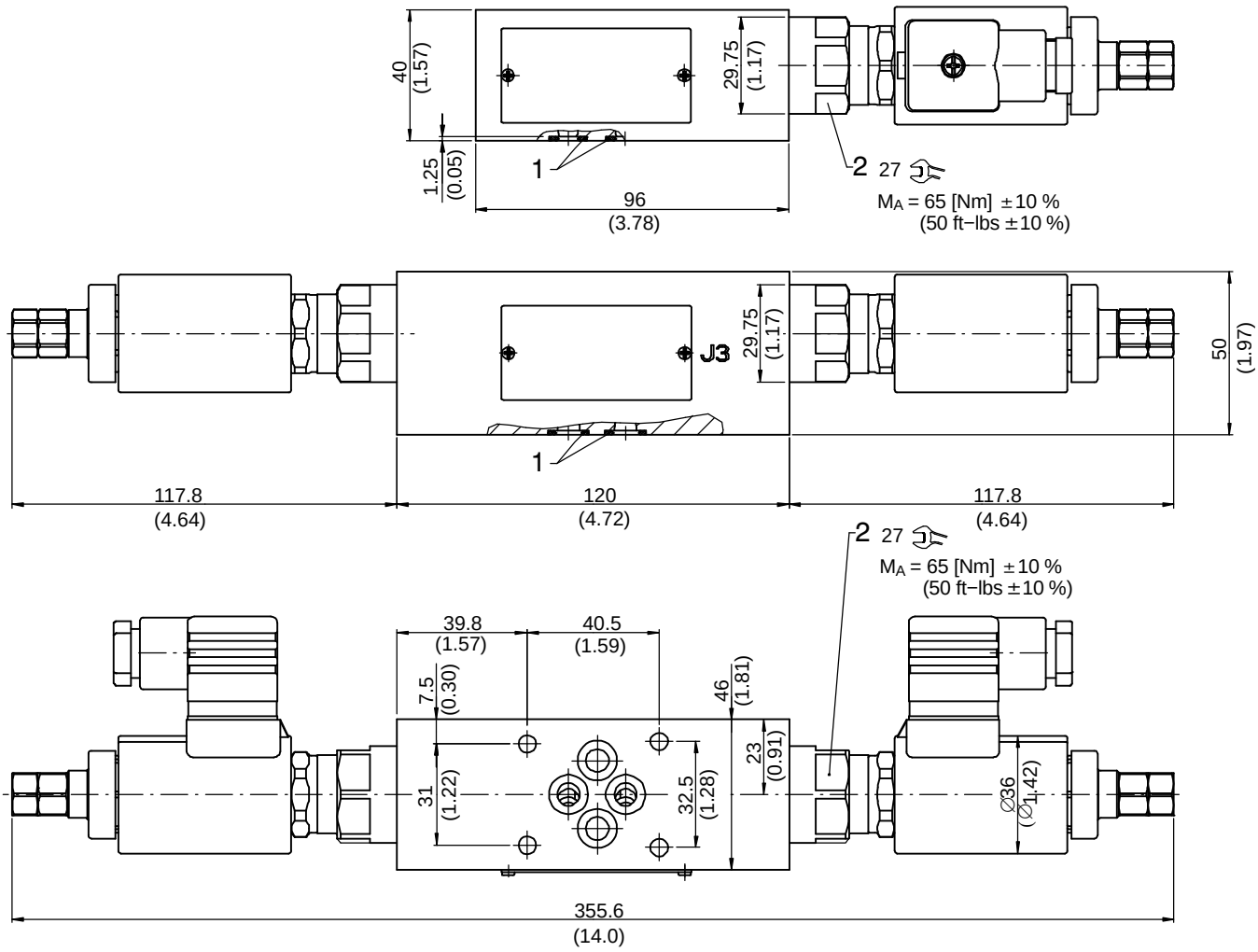

1) Valve side

2) Connections side (manifold side)

6 Installation information

IMPORTANT!
When installing the valve, make sure that the mating face (the manifold interface) aligns with the valve interface. Do not confuse the sandwich valve's manifold side and directional-valve side. Information on setting the pressures can be found in the data sheet for the pressure-relief cartridge that is fitted (ref. no. 400-P-290101-E).

ATTENTION!
Only qualified personnel with mechanical skills may carry out any maintenance work. Generally, the only work that should ever be undertaken is to check, and possibly replace, the seals. When changing seals, oil or grease the new seals thoroughly before fitting them.

NBR seal kit no. DS-193-N 3)

Item	Qty.	Description
1	4	O-ring no. 012 ∅ 9,25 x 1,78 N90
2	2	NBR seal kit no. DS-261-N for pressure-relief cartridge WUVP_C-10…

IMPORTANT!
3) Seal kit with FMK (Viton) seals, no. DS-193-V

7 Ordering code

Ex. S | WUVP | _ | D - 1 | C | O - 35 - PT-FB - 6 | _ 24 | _ _

S	=	sandwich design
WUVP	=	electr. pressure relief, two stage
O	=	for unloading duty (ON/OFF)
L	=	for two-pressure duty (HI/LO)
D ... Q	=	standard model - see relevant data sheets
Z ... R	=	special features - please consult BUCHER
1	=	pressure function 1 (internal pilot-oil drain to T)
C	=	cavity type DC
O	=	normally open
35	=	pressure range …350 bar
25	=	pressure range …250 bar
16	=	pressure range …160 bar
10	=	pressure range …100 bar
PT-FB	=	function from P to T, body-type FB
AT-F	=	function from A to T, body-type F
BT-FA	=	function from B to T, body-type FA
ABT-J	=	function from A and B to T, body-type J
6	=	ISO size 03 interface
(blank)	=	NBR (Nitrile) seals (**standard**)
V	=	FKM (Viton) seals (special seals - please contact BUCHER)
...	=	voltage e.g. **24** (24 V)
D	=	current DC
A	=	current AC
(blank)	=	DIN EN 175301-803 connection with mating plug (**standard, IP 65**)
M100	=	DIN EN 175301-803 connection without mating plug
C	=	Kostal plug connection (IP 65)
JT	=	Junior Timer radial plug connection (with protection diode, IP65)
IT	=	Junior Timer axial plug connection (with protection diode, IP65)
D	=	Deutsch plug connection 45° DT04-2P (IP67/69K)
DT	=	Deutsch plug connection 45° DT04-2P (with protection diode, IP67/69K)
S	=	AMP Superseal 1.5 (IP67) / Metri-Pack 150 (IP65) plug connection
F	=	flying leads (500 mm)

mating plug not supplied

8 Related data sheets

Reference	Description
400-P-030501	Size 03 interface to ISO 4401-03-02
400-P-120110	Coils for screw-in cartridge valves
400-P-290101	Electrically operated pressure-relief cartridge, size 10, series WUVP_C-1…

info.ch@bucherhydraulics.com www.bucherhydraulics.com

© 2024 by Bucher Hydraulics AG Frutigen, CH-3714 Frutigen
All rights reserved.
Data is provided for the purpose of product description only, and must not be construed as warranted characteristics in the legal sense. The information does not relieve users from the duty of conducting their own evaluations and tests. Because the products are subject to continual improvement, we reserve the right to amend the product specifications contained in this catalogue.

Classification: 430.305.300.305.330.300

Stacking Pressure-Relief Valve, ISO Size 05

Q_{max} = 140 l/min (36 gpm), p_{max} = 350 bar (5000 psi
Sandwich design, electrically operated, seated pilot stage
Series SWUVPOD-1…, SWUVPLD-1…

- With cartridge valve, type WUVP_C-1…-10…
- Interface to ISO 4401-05-04
- Bypass circuit ON/OFF
- 2-pressure switching HI/LO
- Bypass function in the PT, AT, BT or ABT connection
- Internal pilot-oil drain to port T
- 4 pressure ranges available
- Excellent stability over the whole pressure and flow range
- External cartridge parts are zinc-nickel plating
- The slip-on coil can be rotated, and it can be replaced without opening the hydraulic envelope
- Various plug-connector systems and voltages are available

1 Description

Series SWUVP_D-1… sandwich valves are high performance, electrically operated pressure-relief valves with a size 05 interface to ISO 4401-05-04. The main components of the valves are a sandwich body (stack-mounting body) and the screw-in cartridge (type WUVP_C-1…). They have a seated pilot stage and a spool-type main stage. These sandwich valves are used in mobile and industrial applications. All external parts of the cartridge are zinc-nickel plated according to DIN EN ISO 19 598 and are thus suitable for use in the harshest operating environments. The slip-on coils can be replaced without opening the hydraulic envelope and can be positioned at any angle through 360°. The sandwich body is sealed at its manifold side (the connections side) by means of O-rings fitted in counterbores.

2 Technical data

General characteristics		Description, value, unit	
Designation		Stacking-pressure-relief valve	
Design		sandwich design, electrically operated, seated pilot stage	
Mounting method		4 x ∅ 5,4 holes for M5 cap screws	
Size		size 05 interface to ISO 4401-05-04 / DIN 24 340 A10	
Weight	function PT function AT, BT function ABT	3,50 kg 3.30 kg 3.80 kg	(7.72 lb) (7.28 lb) (8.38 lb)
Mounting attitude		unrestricted	
Ambient temperature range		-30 °C… +50 °C	(-22 °F… +122 °F)
Surface corrosion protection		without	

Hydraulic characteristics		Description, value, unit	
Maximum operating pressure	- in ports P, A, B - in port T	350 bar 250 bar	(5000 psi) (3600 psi)
Maximum flow rate		140 l/min	(36 gpm)
Nominal pressure ranges		…100 bar, …160 bar, …250 bar, …350 bar (…1400 psi, …2300 psi, …3600 psi, …5000 psi)	
Flow direction		see symbol	

Hydraulic characteristics	Description, value, unit
Hydraulic fluid	HL and HLP mineral oil to DIN 51 524; for other fluids, please contact BUCHER
Hydraulic fluid temperature range	-30 °C… +80 °C (-22 °F… +176 °F)
Viscosity range	10…500 mm^2/s (cSt), recommended 15...250 mm^2/s (cSt)
Minimum fluid cleanliness Cleanliness class to ISO 4406 : 1999	class 20/18/15

Electrical characteristics	Description, value, unit
Supply voltage	12 V DC, 24 V DC 115 V AC, 230 V AC (50 … 60 Hz)
Supply voltage tolerance	± 10 %
Nominal power consumption	V DC = 27 W V AC = 25 W
Relative duty cycle	100 %
Protection class to ISO 20 653 / EN 60 529	IP 65 / IP 67 / IP 69K, see “Ordering code” (with appropriate mating connector and proper fitting and sealing)
Electrical connection	DIN EN 175301-803, 3-pin 2 P+E (standard) for other connectors, see “Ordering code”

3 Symbol

Function in PT, AT, BT or ABT (bypass model)

SWUVP_D-1…-PT-10…

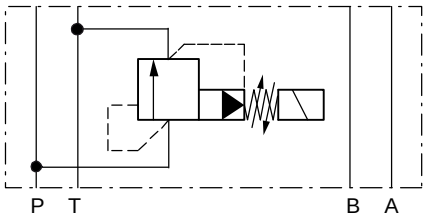

SWUVP_D-1…-AT-10…

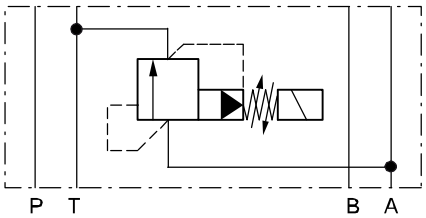

SWUVP_D-1…-BT-10…

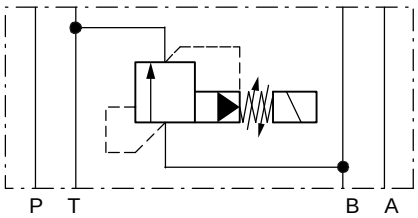

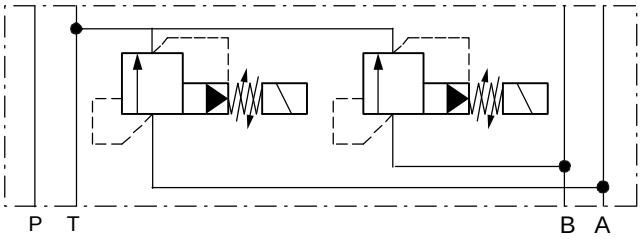

SWUVP_D-1…-ABT--J-10…

4 Performance graphs

IMPORTANT!
Detailed performance data and other hydraulic characteristics can be found in the data sheet for the pressure-relief cartridge that is fitted (data sheet ref. no. 400-P-290101-E).

ATTENTION!
The performance figures in the data sheet for the cartridge valve refer just to the cartridge itself. Take into account the additional pressure drop in the body into which it is fitted.

5 Dimensions & sectional view

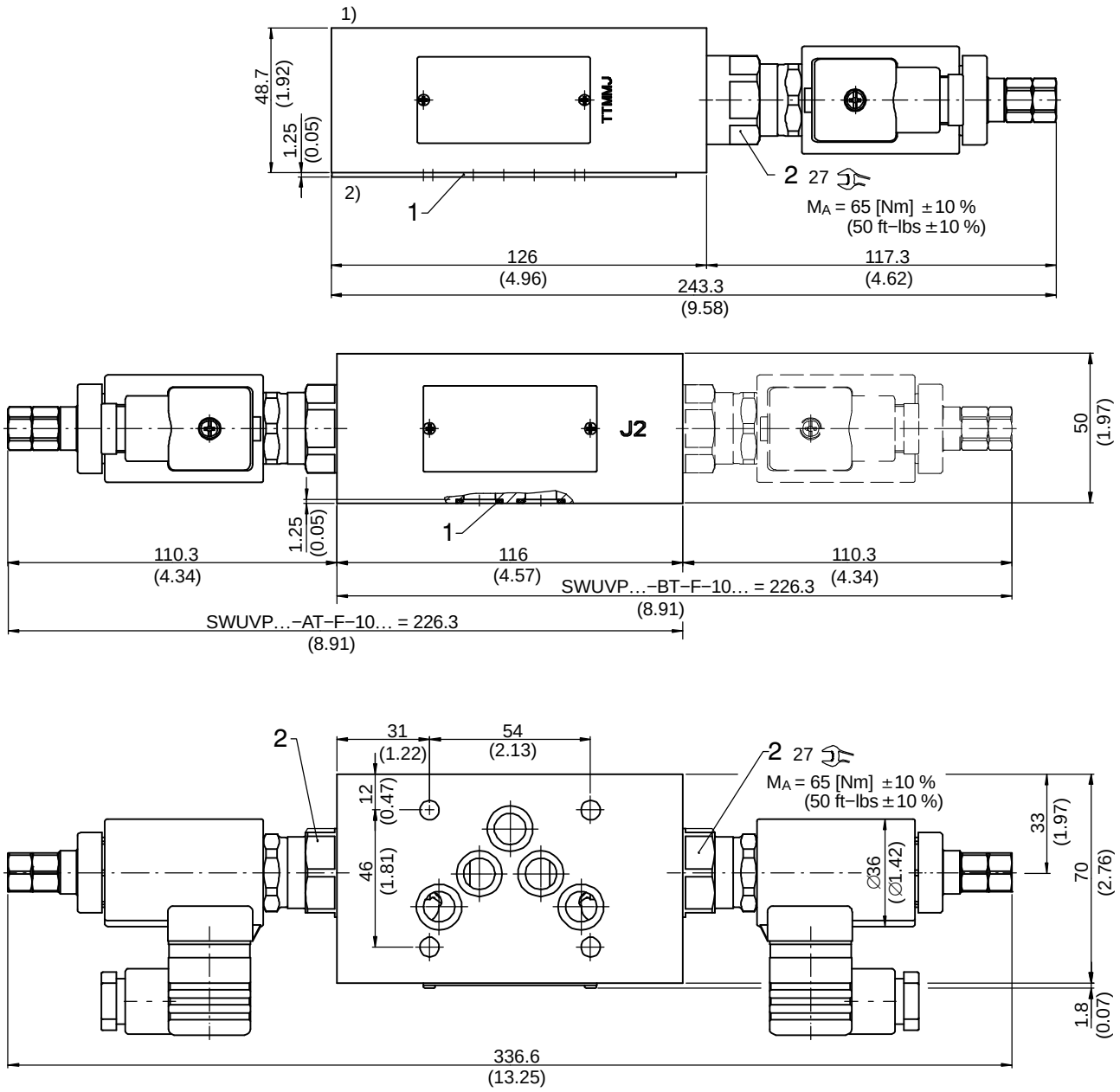

1) Valve side

2) Connections side (manifold side)

6 Installation information

IMPORTANT!
When installing the valve, make sure that the mating face (the manifold interface) aligns with the valve interface. Do not confuse the sandwich valve's manifold side and directional-valve side. Information on setting the pressures can be found in the data sheet for the pressure-relief cartridge that is fitted (ref. no. 400-P-290101-E).

ATTENTION!
Only qualified personnel with mechanical skills may carry out any maintenance work. Generally, the only work that should ever be undertaken is to check, and possibly replace, the seals. When changing seals, oil or grease the new seals thoroughly before fitting them.

NBR seal kit no. DS-493-N [3)]

Item	Qty.	Description
1	5	O-ring no. 014 ∅ 12,42 x 1,78 N90
2	2	NBR seal kit no. DS-261-N for pressure-relief cartridge WUVP_C-10…

IMPORTANT!
3) Seal kit with FMK (Viton) seals, no. DS-493-V

7 Ordering code

Ex. S | WUVP | _ | D - 1 | C | O - 35 - PT-FB - 10 | _ | 24 | _ | _

S	=	sandwich design
WUVP	=	electr. pressure relief, two stage
O	=	for unloading duty (ON/OFF)
L	=	for two-pressure duty (HI/LO)
D ... Q	=	standard model - see relevant data sheets
Z ... R	=	special features - please consult BUCHER
1	=	pressure function 1 (internal pilot-oil drain to T)
C	=	cavity type DC
O	=	normally open
35	=	pressure range …350 bar
25	=	pressure range …250 bar
16	=	pressure range …160 bar
10	=	pressure range …100 bar
PT-FB	=	function from P to T, body-type FB
AT-F	=	function from A to T, body-type F
BT-FA	=	function from B to T, body-type FA
ABT-J	=	function from A and B to T, body-type J
10	=	ISO size 05 interface
(blank)	=	NBR (Nitrile) seals (**standard**)
V	=	FKM (Viton) seals (special seals - please contact BUCHER)
...	=	voltage e.g. **24** (24 V)
D	=	current DC
A	=	current AC
(blank)	=	DIN EN 175301-803 connection with mating plug (**standard, IP 65**)
M100	=	DIN EN 175301-803 connection without mating plug
C	=	Kostal plug connection (IP 65)
JT	=	Junior Timer radial plug connection (with protection diode, IP65)
IT	=	Junior Timer axial plug connection (with protection diode, IP65)
D	=	Deutsch plug connection 45° DT04-2P (IP67/69K)
DT	=	Deutsch plug connection 45° DT04-2P (with protection diode, IP67/69K)
S	=	AMP Superseal 1.5 (IP67) / Metri-Pack 150 (IP65) plug connection
F	=	flying leads (500 mm)

mating plug not supplied

8 Related data sheets

Reference	Description
400-P-050101	Size 05 interface to ISO 4401-05-04
400-P-120110	Coils for screw-in cartridge valves
400-P-290101	Electrically operated pressure-relief cartridge, size 10, series WUVP_C-1…

info.ch@bucherhydraulics.com www.bucherhydraulics.com

© 2024 by Bucher Hydraulics AG Frutigen, CH-3714 Frutigen
All rights reserved.
Data is provided for the purpose of product description only, and must not be construed as warranted characteristics in the legal sense. The information does not relieve users from the duty of conducting their own evaluations and tests. Because the products are subject to continual improvement, we reserve the right to amend the product specifications contained in this catalogue.

Classification: 430.305.300.305.330.300

Proportional Pressure-Relief Valve, ISO Size 03

Q_{max} = 60 l/min, p_{max} = 315 bar
Sandwich design, seated pilot stage
Series SDVPSA-3…

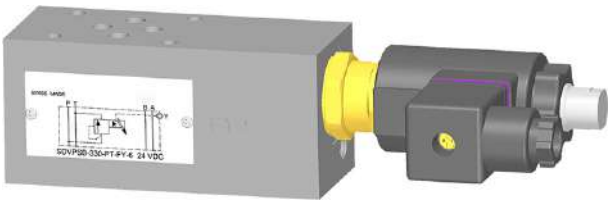

- With cartridge valve, type DVPSA-3D…-10…
- Interface to ISO 4401-03-02
- 5 pressure ranges available
- External pilot-oil drain
- Very stable operation
- External cartridge parts are with zinc-nickel plating
- The slip-on coil can be rotated, and it can be replaced without opening the hydraulic envelope
- Various plug-connector systems and voltages are available

1 Description

Series SDVPSA-3… sandwich valves are high performance, proportional pressure-relief valves with a size 03 interface to 4401-03-02. The main components of the valves are a sandwich body (stack-mounting body) and the screw-in, proportional pressure-relief cartridge, type DVPSA-3D…-10. These sandwich valves are used to limit the system pressure in mobile and industrial applications.

All external parts of the cartridge are zinc-nickel plated according to DIN EN ISO 19 598 and are thus suitable for use in the harshest operating environments. The slip-on coils can be replaced without opening the hydraulic envelope and can be positioned at any angle through 360°. The sandwich body is sealed at its manifold side (the connections side) by means of O-rings fitted in counterbores.

2 Symbol

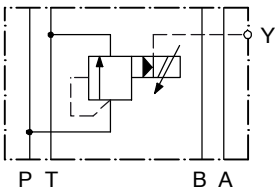

SDVPSA-3 … -PT-FY-6…

3 Technical data

General characteristics	Description, value, unit
Designation	proportional pressure-relief valve
Design	sandwich design, seated pilot, spool-type main stage
Mounting method	4 x ∅ 5.4 holes for M5 cap screws
Size	size 03 interface to ISO 4401-03-02 / DIN 24 340 A6
Weight	2.15 kg
Mounting attitude	unrestricted
Ambient temperature range	-25 °C … +50 °C
Surface corrosion protection	without

WWW.SUMY.IR

Hydraulic characteristics	Description, value, unit
Maximum operating pressure	315 bar
Flow range	10…60 l/min
Nominal pressure ranges	…60 bar, …100 bar, …160 bar, …250 bar, …315 bar
Flow direction	see symbol
Hydraulic fluid	HL and HLP mineral oil to DIN 51 524; for other fluids, please contact BUCHER
Hydraulic fluid temperature range	-25 °C … +70 °C
Viscosity range	15…380 mm^2/s (cSt), recommended 20...130 mm^2/s (cSt)
Minimum fluid cleanliness Cleanliness class to ISO 4406 : 1999	class 18/16/13

Electrical characteristics		Description, value, unit
Supply voltage		12 V DC, 24 V DC
Control current		12 V = 0…1400 mA, 24 V = 0…750 mA
Coil resistance R	- cold value at 20 °C - max. warm value	12 V = 5.8 Ω / 24 V = 21 Ω 12 V = 8.6 Ω / 24 V = 32 Ω
Recommended PWM frequency (dither)		200 Hz
Hysteresis with PWM		2…4 % I_N
Reversal error with PWM		2…5 % I_N
Sensitivity with PWM		≤ 1 % I_N
Reproducibility with PWM		< 1.5 % p_N
Relative duty cycle		100 %
Protection class to ISO 20 653 / EN 60 529		IP 65 / IP 67 / IP 69K, see “Ordering code” (with appropriate mating connector and proper fitting and sealing)
Electrical connection		DIN EN 175301-803, 3-pin 2 P+E (standard) for other connectors, see “Ordering code”

4 Performance graphs

IMPORTANT!
Detailed performance data and other hydraulic characteristics can be found in the data sheet for the proportional pressure-relief cartridge that is fitted (data sheet ref. no. 400-P-581401-E).

ATTENTION!
The performance figures in the data sheet for the cartridge valve refer just to the cartridge itself. Take into account the additional pressure drop in the body into which it is fitted.

5 Dimensions & sectional view

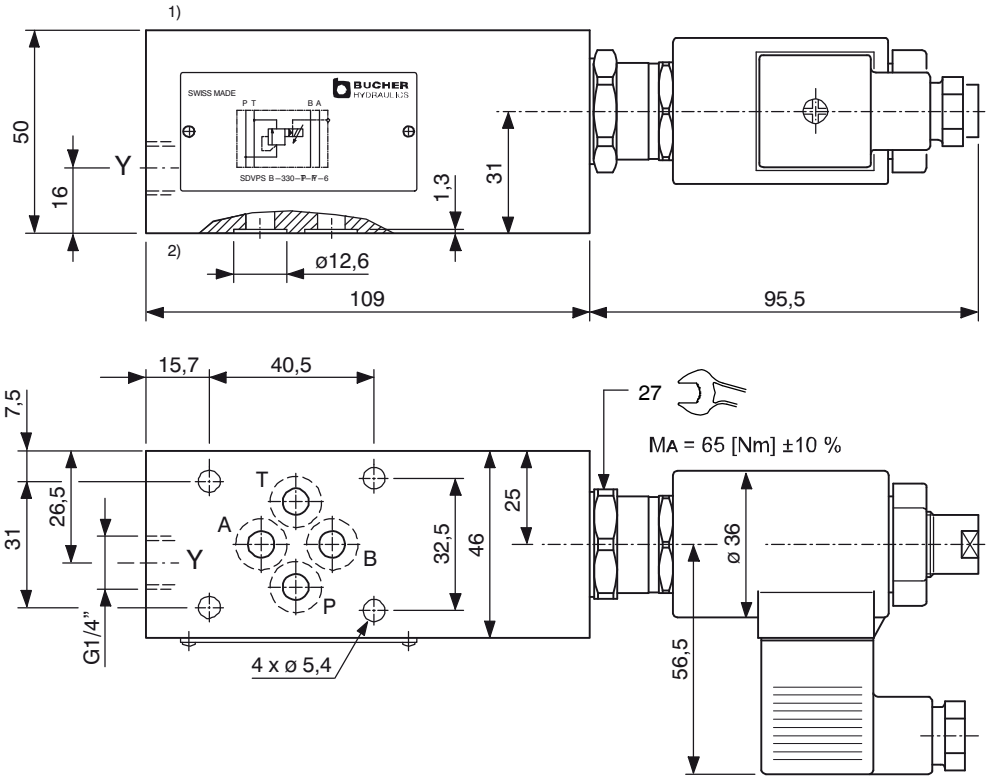

1) Valve side

2) Connections side (manifold side)

Y Pilot-oil drain (to tank without back-pressure)

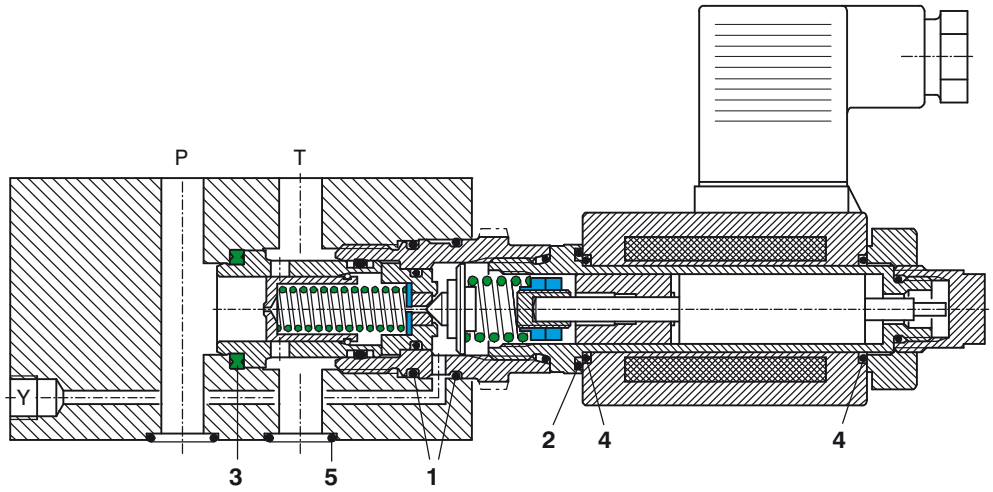

6 Installation information

IMPORTANT!
When installing the valve, make sure that the mating face (the manifold interface) aligns with the valve interface. Do not confuse the sandwich valve's manifold side and directional-valve side. No adjustments are necessary, since the cartridges are set in the factory.

ATTENTION!
To achieve the proportional pressure-relief cartridge's maximum performance rating, fit the solenoid coil as shown (with the plug pins at the right). Use the specified tightening torque when fitting the cartridge.

ATTENTION!
Only qualified personnel with mechanical skills may carry out any maintenance work. Generally, the only work that should ever be undertaken is to check, and possibly replace, the seals. When changing seals, oil or grease the new seals thoroughly before fitting them.

Seal kit no. DS-345-N

Item	Qty.	Description	
1	2	O-ring no. 020	∅ 21.95 x 1.78 N90
2	1	O-ring	∅ 18.00 x 2.00 Viton
3	1	Seal ring	∅ 22.10 / 16.50 x 2.50
4	2	O-ring	∅ 16.00 x 2.00 Viton
5	4	O-ring no. 012	∅ 9.25 x 1.78 N90

7 Ordering code

Ex. S DVP S A - 3 30 - PT - FY - 6 - _ 24 D - _

S	=	sandwich valve
DVP	=	pressure-relief cartridge, two stage
S	=	standard solenoid (proportional)
A ... Q	=	standard model - see relevant data sheets
Z ... R	=	special features - please consult BUCHER
3	=	pressure function 3 (external pilot drain to Y)
30	=	pressure range …315 bar
25	=	pressure range …250 bar
16	=	pressure range …160 bar
10	=	pressure range …100 bar
06	=	pressure range … 60 bar
PT	=	function from P to T
FY	=	sandwich body type
6	=	ISO size 03 interface
(blank)	=	NBR (Nitrile) seals (**standard**)
V	=	FKM (Viton) seals (special seals - please contact BUCHER)
...	=	voltage e.g. **24** (24 V)
D	=	current DC
A	=	current AC
(blank)	=	DIN EN 175301-803 connection with mating plug (**standard, IP 65**)
M100	=	DIN EN 175301-803 connection without mating plug
C	=	Kostal plug connection (IP 65)
JT	=	Junior Timer radial plug connection (with protection diode, IP65)
IT	=	Junior Timer axial plug connection (with protection diode, IP65)
D	=	Deutsch plug connection 45° DT04-2P (IP67/69K)
DT	=	Deutsch plug connection 45° DT04-2P (with protection diode, IP67/69K)
S	=	AMP Superseal 1.5 (IP67) / Metri-Pack 150 (IP65) plug connection
F	=	flying leads (500 mm)

mating plug not supplied

8 Related data sheets

Reference	(Old no.)	Description
400-P-030501	(i-31)	Size 03 interface to ISO 4401-03-02
400-P-120110	(W-2.141)	Coils for screw-in cartridge valves
400-P-581401	(P-51.4 A_1)	Proportional pressure-relief valve, size 10, series DVPSA-3D…-10…

info.ch@bucherhydraulics.com www.bucherhydraulics.com

© 2021 by Bucher Hydraulics AG Frutigen, CH-3714 Frutigen
All rights reserved.
Data is provided for the purpose of product description only, and must not be construed as warranted characteristics in the legal sense. The information does not relieve users from the duty of conducting their own evaluations and tests. Because the products are subject to continual improvement, we reserve the right to amend the product specifications contained in this catalogue.

Classification:

BUCHER
hydraulics
WWW.SUMY.IR

Stacking Pressure Reducing Valve, size 3
with integral Bypass Check Valve
Seated Pilot Stage, Spool-type Main Stage, Series SDRB ...

- 80 l/min, 350 / 315 bar
- With two-stage 10 mm pressure reducing cartridge DRPA-5-10...
- 350 bar, 80 l/min on all ports for ..P-6 315 bar, 80 l/min on all ports for ..AR-6 / ..BR-6
- Pilot stage is drained to port T
- Optionally available with hand knob, or lockable hand knob, adjuster
- Also available with solenoid controlled two-pressure cartridge WDRVPB-5...-10
- with ISO 4401/CETOP R35H size 3, NFPA D03, DIN 24 340 A6 interface

1. Description

Series SDRB...-6 stack valves are used as pressure reducing valves in the P-, A- or B lines. They are equipped with the two-stage pressure reducing cartridge type DRPA-5-10... as shown on data sheet D-4.36 - the pilot stage is drained to port T. While the pressure in P1 (A1, B1) remains below the valve setting, the connection P-P1 (A-A1, B-B1) remains fully open. As soon as the pressure in P1 (A1, B1) rises above the setting, the pressure reducing function becomes active. The control spool holds the pressure in P1 (A1, B1) at the valve setting, independently of the primary pressure at P (A, B). Pilot flow occurs only while the reducing function is active and is approximately 300 cc/min (see Performance Data). The bypass check valve in models SDRB-AR-6... and SDRB-BR-6... allows reverse flow from A1 to A, or B1 to B. The screw-in design of the cartridge valve provides for straight-forward, trouble-free maintenance. Interface sealing is by means of O-rings which are retained in counterbores in the valve body.

2. Symbols

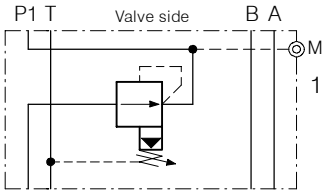

P SDRB-P-6 ...

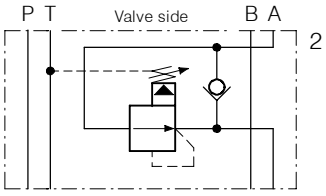

SDRB-AR-6 ... A1

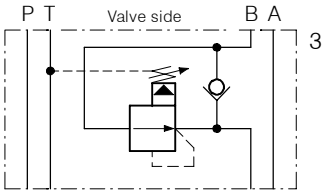

SDRB-BR-6 ... B1

3. Characteristics

Type		stacking pressure reducing valve
Design		two-stage, sliding spool
Mounting method		stack mounting
Size		ISO 4401 size 3 interface
Mass	kg	SDRB-P-6 = 1,50; SDRB-AR / BR-6 = 1,65
Mounting attitude		unrestricted
Flow direction		see symbols
Operating pressure in P, A, B and T.	bar	..P-6..: ... 350 ..AR-6 / ..BR-6: ... 315
Adjustment ranges	bar	pressure range N = 010 ... 350/315 pressure range M = 010 ... 210 pressure range L = 010 ... 065
Flow rate Qmax	l/min	80, see performance limits
Fluids		Hydraulic oils HL and HLP to DIN 51 524, other fluids contact BUCHER
Fluid temperature range	°C	-25 ... + 80

Ambient temperature	°C	-25 ... + 80
Viscosity range	cSt	10 ... 650, recommended 15 ... 250
Minimum fluid cleanless		18/14 to ISO 4406 /CETOP RP70H 8 ... 9 to NAS 1638

4. Performance graphs

Oil viscosity 33 cSt

SDRB-P-6-..N
p-Q characteristics
with p in T = 0 [bar]

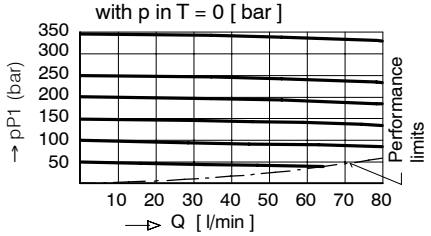

SDRB-P-6-..M
p-Q characteristics
with p in T = 0 (bar)

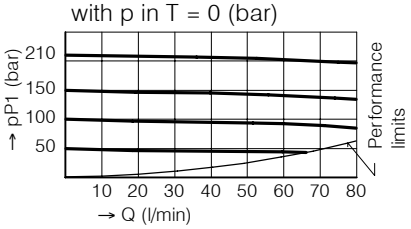

SDRB-P-6-..L
p-Q characteristics
with p in T = 0 (bar)

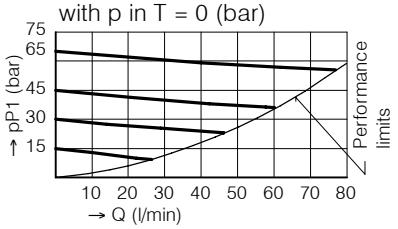

SDRB-AR (BR) -6-..N
p-Q characteristics
with p in T = 0 (bar)

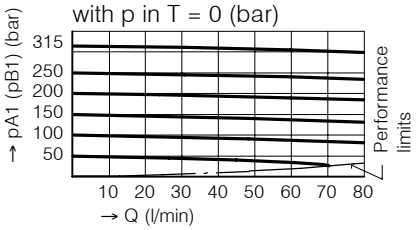

SDRB-AR (BR) -6-..M
p-Q characteristics
with p in T = 0 (bar)

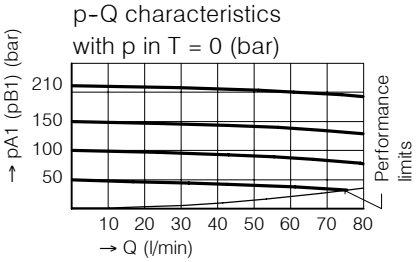

SDRB-AR (BR) -6-..L
p-Q characteristics
with p in T = 0 (bar)

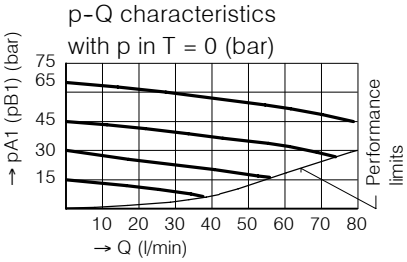

Δp-Q characteristics
A ⇒ A1 bzw. B ⇒ B1

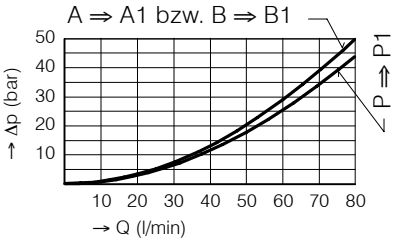

Δp-Q characteristics A1 ⇒ A, B1 ⇒ B
through bypass check valve

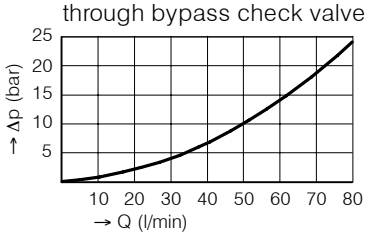

Rate of pressure change when turning the adjusting screw:

SDRB-..-6-..N:	1 turn ≙ approx. 60 (bar)
SDRB-..-6-..M:	1 turn ≙ approx. 38 (bar)
SDRB-..-6-..L:	1 turn ≙ approx. 13 (bar)

Pilot oil flow P ⇒ T while reducing function is active is approx. 300 cc/min

5. Dimensions

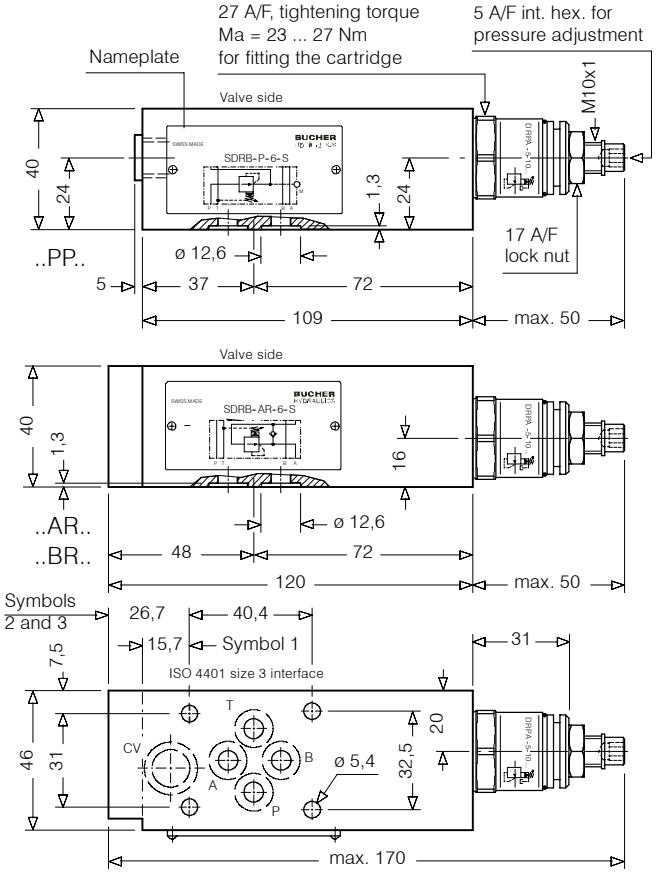

Adjuster style S
(standard)

OPTIONS

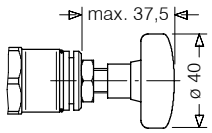

Adjuster style H
hand knob (can be fitted later by user)

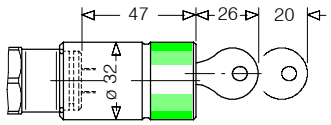

Adjuster style Z4 Lockable hand knob type 2H complies with Volkswagen Factory Spezification BV 1.09(factory option only)

6. Schematic section

showing the relevant ports
Ex. SDRB-AR-6 ...

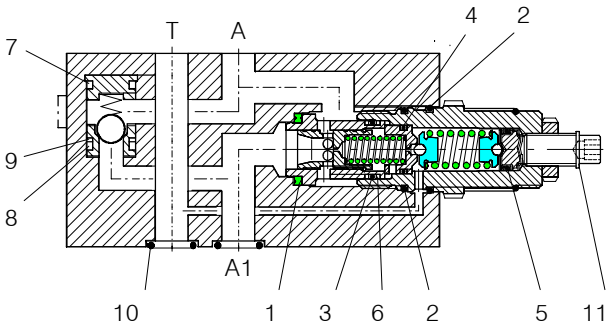

Seal kit no. DS-260, comprising:

Itm.	Qty.	Qty.	Description	Size
1	1	1	Seal	∅ 22.1/16.5x2.5
2	2	2	O-ring no. 020	∅ 21.95x1.78 N90
3	1	1	O-ring	∅ 14.00x2.00 N90
4	1	1	O-ring no. 013	∅ 10.82x1.78 N90
5	1	1	O-ring no. 012	∅ 9.25x1.78 N90
6	2	2	Backup ring	∅ 13,7x1,4x1,15
7	--	1	O-ring no. 015	∅ 14.00x1.78 N90
8	--	1	O-ring no. 012	∅ 9.25x1.78 N90
9	--	1	Backup ring	∅ 7,6x1,5x1,4
10	4	4	O-ring no. 012	∅ 9.25x1.78 N90
11	1	1	Snap ring	∅ 9 Typ SS

SDRB-BR../..-AR-6
SDRB-P-6...

7. Installation and servicing

All installation and servicing must be carried out with care, and by qualified personnel only. At installation, be sure to mount the valve with the correct faces contacting the adjacent units and with all interface connections lining up properly. When changing seals, the new seals should be thoroughly oiled or greased before fitting them to the valve. Use the correct tightening torque when fitting the cartridge and guide nut.

8. Model code key

Ex. S DR B - A R - 6 - S N _

S = stacking valve

DR = pressure reducing function

A ... Q = standard model per current data sheet
Z ... R = special features by arrangement

P = function from P to P1
A = function from A to A1
B = function from B to B1

R = with bypass check valve ... AR ... and ... BR ... only

6 = ISO 4401 size 3 interface

S = with hex. skt. screw adjuster (standard)
H = with hand knob adjuster
Z = with lockable hand knob adjuster type Z4

N = pressure range 10 ... 350/315 bar
M = pressure range 10 ... 210 bar
L = pressure range 10 ... 65 bar

(blank) = Nitrile seals (standard)
V = Viton seals
For special seals, contact BUCHER

9. Related data sheets

Old no.	New no.	
i-00	400-P-010101-E	Table of interface equivalents
i-31	400-P-030501-E	DIN 24 340 size A6 interface
D-4.36	400-P-280201-E	Two-stage pressure reducing cartridge, 10 mm, series DRPA-5-10 ...

info.ch@bucherhydraulics.com www.bucherhydraulics.com

© 2015 by Bucher Hydraulics AG Frutigen, CH-3714 Frutigen
All rights reserved.
Data is provided for the purpose of product description only, and must not be construed as warranted characteristics in the legal sense. The information does not relieve users from the duty of conducting their own evaluations and tests. Because the products are subject to continual improvement, we reserve the right to amend the product specifications contained in this catalogue.

BUCHER hydraulics

WWW.SUMY.IR

Stacking Pressure Reducing Valve, 10 mm
With integral Bypass Check Valve, Seated Pilot Stage, Spool-type Main Stage, Series SDRB ...

- 350 bar, 100 l/min
- With two-stage 10 mm pressure reducing cartridge DRPA-5-10 ...
- 350 bar, 100 l/min on all ports
- Pilot stage is drained to port T
- Optionally available with hand knob or lockable hand knob adjuster
- Also available with solenoid controlled two-pressure cartridge WDRVPB-5...-10
- Mounting interface to ISO 4401 / CETOP R35H size 5, NFPA D05, DIN 24 340 A10

1. Description

Series SDRB...-10 stack valves are used as pressure reducing valves in the P-, A- or B-lines. They are equipped with the two-stage pressure reducing cartridge type DRPA-5-10..., the pilot stage is drained to port T. While the pressure in P1 (A1, B1) remains below the valve setting, the connection P → P1 (A → A1, B → B1) remains fully open. As soon as the pressure in P1 (A1, B1) rises above the setting, the pressure reducing function becomes active. The control spool holds the pressure in P1 (A1, B1) at the valve setting, independently of the primary pressure at P (A, B). Pilot flow occurs only while the reducing function is active and is approximately 300 cc/min (see Performance graphs). Model SDRB-P-10... is provided with a G 1/4" gauge connection on the secondary pressure side. The bypass check valve in models SDRB-AR / BR-10... allows reverse flow from A1 to A or B1 to B. The screw-in design of the cartridge valve provides for straight-forward, trouble-free maintenance. Interface sealing is by means of a seal plate and 5 O-rings.

2. Symbols

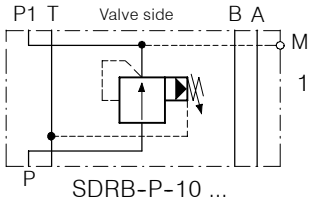

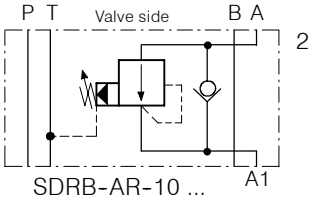

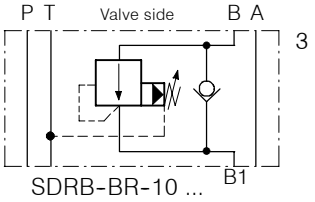

3. Main characteristics

Designation		stacking pressure reducing valve
Design		two-stage, seated pilot, sliding spool
Mounting method		stack mounting
Size		ISO 4401 size 5 interface
Weight	kg	SDRB-P-10 ... = 2,90, SDRB-AR / BR-10 ... = 3,0
Mounting attitude		unrestricted
Flow direction		see symbols
Operating pressure range	bar	... 350 in P, A, B and T
Adjustment ranges	bar	pressure range N = 010 ... 350 pressure range M = 010 ... 210 pressure range L = 010 ... 065
Flow rate, Qmax	l/min	1 ... 100, see performance limits

Fluids		HL and HLP hydraulic oils to DIN 51 524; for other fluids, please consult BUCHER
Fluid temperature range	°C	-25 ... +80
Ambient temperature	°C	-25 ... +80
Viscosity range	mm^2/s (cSt)	10 ... 650, recommended 15 ... 250
Minimum fluid cleanliness level		18/14 to ISO 4406 / CETOP RP70H; 8 ... 9 to NAS 1638

4. Performance graphs

Measured with oil viscosity 33 mm^2/s (cSt)

SDRB-P-10-..N
p-Q characteristics
with p in T = 0 (bar)

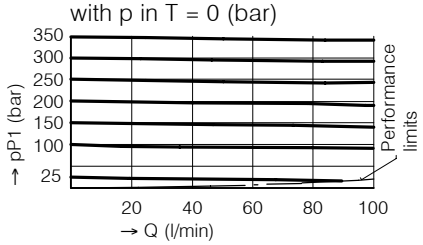

SDRB-P-10-..M
p-Q characteristics
with p in T = 0 (bar)

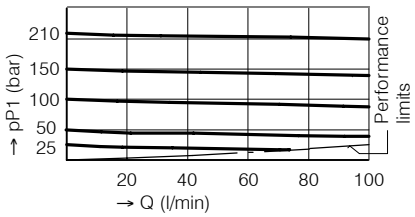

SDRB-P-10-..L
p-Q characteristics
with p in T = 0 (bar)

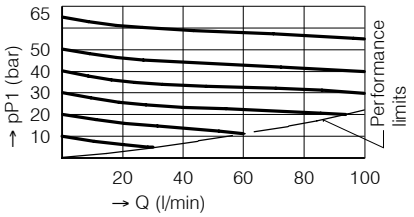

SDRB-AR / BR-10-..N
p-Q characteristics
with p in T = 0 (bar)

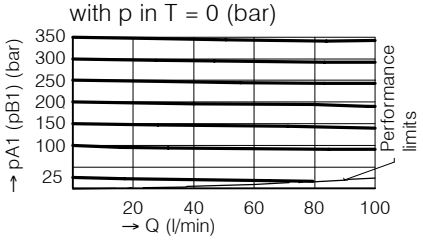

SDRB-AR / ZR-10-..M
p-Q characteristics
with p in T = 0 (bar)

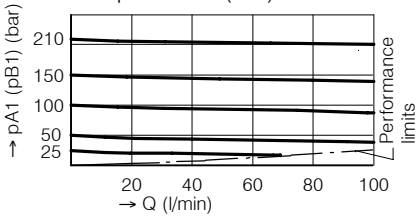

SDRB-AR / ZR-10-..L
p-Q characteristics
with p in T = 0 (bar)

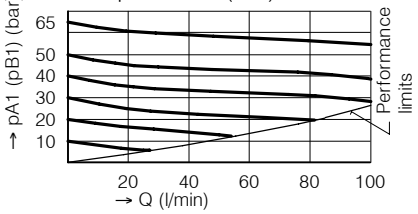

Δp-Q characteristic
P→P1 (A→A1 / B→B1)

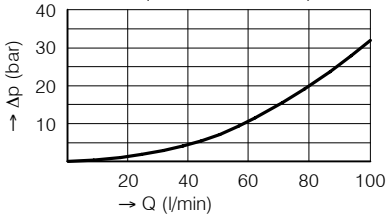

Δp-Q characteristic
A1→A (B1→B)
through bypass check valve

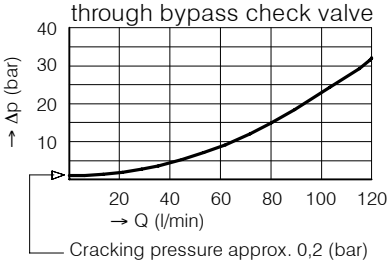

Rate of pressure change
when turning the adjusting screw:

SDRB-..-10-..N:	1 turn	≙	app. 60 (bar)
SDRB-..-10-..M:	1 turn	≙	app. 38 (bar)
SDRB-..-10-..L:	1 turn	≙	app. 13 (bar)

Pilot oil flow P→T (A→T) (B→T)
is approx 300 cc/min

5. Dimensions

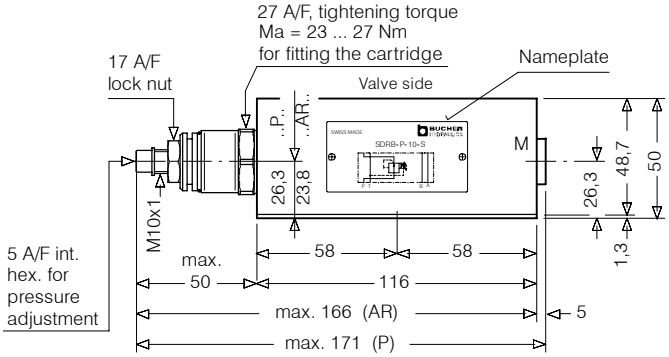

Adjuster style S
(Standard)

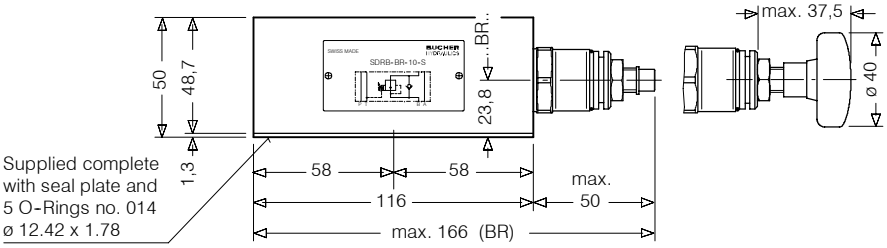

OPTIONS

Adjuster style H
Hand knob (can be fitted later by user)

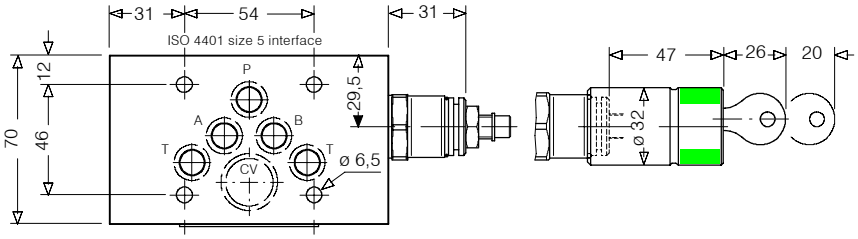

Adjuster style Z4
Lockable hand knob type 2H complies with Volkswagen Factory Specification BV 1.09 (factory option only)

6. Schematic section

showing the relevant ports
Ex. SDRB-AR-10 ...

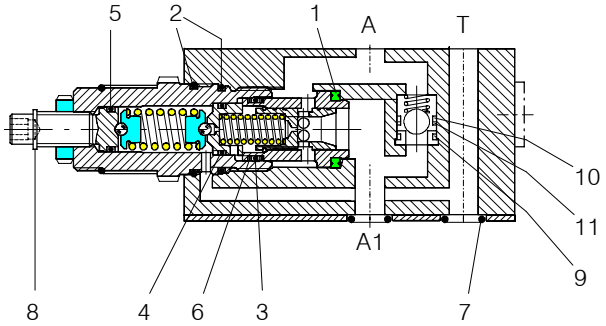

Seal kit no. DS-220, comprising:

Itm.	Qty.	Description	Size
1	1	Seal	∅ 22,1 x 16,5 x 2,5
2	2	O-ring no. 020	∅ 21,95 x 1,78 N90
3	1	O-ring	∅ 14 x 2
4	1	O-ring no. 013	∅ 10,82 x 1,78 N90
5	1	O-ring no. 012	∅ 9,25 x 1,78 N90
6	2	Backup ring	∅ 13,7/1,4x1,4 FI0751
7	5	O-ring no. 014	∅ 12,42 x 1,78 N90
8	1	Snap ring	∅ 9 type SS
9	1	O-ring no. 018	∅ 18,77 x 1,78 N90
10	1	O-ring no. 016	∅ 15,60 x 1,78 N90
11	1	Backup ring	∅ 15,3/1,5x1,4 FI0751

7. Installation and servicing

All installation and servicing must be carried out with care, and by qualified personnel only. At Installation, be sure to mount the valve with the correct faces contacting the adjacent units and with all interface connections lining up properly. When changing seals, the new seals should be thoroughly oiled or greased before fitting them to the valve. Use the correct tightening torque when fitting the cartridge.

8. Ordering code

Ex. S DR B - A R - 10 - S N _

S = stacking valve
DR = Pressure reducing function
A ... Q = standard model per current data sheet
Z ... R = special features by arrangement
P = function from P to P1
A = function from A to A1
B = function from B to B1
R = with bypass check valve ...AR... und ...BR... only
10 = ISO 4401 size 5 interface
S = with hex. skt. screw adjuster (standard)
H = with hand knob adjuster
Z = with lockable hand knob adjuster type Z4
N = pressure range 10 ... 350 bar (Normal)
M = pressure range 10 ... 210 bar (Medium)
L = pressure range 10 .... 65 bar (Light)
N = Nitrile seals (standard)
V = Viton seals
Special seals by arrangement

9. Related data sheets

Old no.	New no.	
i-00	400-P-010101-E	Table of interface equivalents
i-41	400-P-050101-E	DIN 24 340 size A10 interface
D-4.36	400-P-280201-E	Two-stage pressure reducing cartridge, 10 mm, series DRPA-5-10 ...
G-45	400-P-810901-E	Seal plate type DB-10

info.ch@bucherhydraulics.com www.bucherhydraulics.com

© 2015 by Bucher Hydraulics AG Frutigen, CH-3714 Frutigen
All rights reserved.
Data is provided for the purpose of product description only, and must not be construed as warranted characteristics in the legal sense. The information does not relieve users from the duty of conducting their own evaluations and tests. Because the products are subject to continual improvement, we reserve the right to amend the product specifications contained in this catalogue.

Pressure-Reducing Valve, ISO Size 07

Q_{max} = 250 l/min, p_{max} = 350 bar
Sandwich design, manually operated, seated pilot stage
Series SDRA…

- With cartridge valve, type DRPB-5-16…
- Interface to ISO 4401-07-07
- Inline function in the P, A or B line
- Internal pilot-oil drain to port Y, A or B
- 4 pressure ranges available
- With pressure-gauge port
- Excellent stability over the whole pressure and flow range
- Responsive pressure adjustment
- Available with hand-knob or tamper-proof cap
- External cartridge parts are zinc plated and chromited (CrVI-free)

1 Description

Series SDRA… sandwich valves are high performance pressure-reducing valves with a size 07 interface to ISO 4401-07-07. The main components of the valves are a sandwich body (stack-mounting body) and the screw-in cartridge (type DRPB-5-16…). The pressure-reducing cartridges have a seated pilot stage, and the main stage is designed on the sliding-spool principle. Four pressure ranges are available for the inline function in P. Pilot oil only flows when the pilot stage is active (main stage reducing), with internal drain options to ports Y, A, or B. In this state, the secondary pressure will be maintained at a constant level as long as the primary pressure does not fall below that level. It will be maintained in the secondary side of the P line, and also in A or B, dependent on the operating position of the directional valve. A pressure-gauge port M (G1/4") is also provided in the secondary circuit. The pressure is set by means of an adjusting screw or a hand-knob on the pilot cartridge. To safeguard pressure settings, the adjusting spindle can be sealed with a tamper-proof cap. These sandwich valves are used to reduce the system pressure in mobile and industrial applications. All external parts of the cartridge are zinc-nickel plated according to DIN EN ISO 19 598 and are thus suitable for use in the harshest operating environments. The sandwich body is sealed at its manifold side (the connections side) by means of O-rings fitted in counterbores.

2 Technical data

General characteristics	Description, value, unit
Designation	pressure-reducing valve
Design	sandwich design, manually operated, seated pilot stage
Mounting method	4 x ∅ 10.5 holes for M10 cap screws 2 x ∅ 7 holes for M6 cap screws
Size	size 07 interface to ISO 4401-07-07 / DIN 24 340 A16
Weight	8.65 kg
Mounting attitude	unrestricted
Ambient temperature range	-25 °C … +80 °C
Surface corrosion protection	without

Hydraulic characteristics		Description, value, unit
Maximum operating pressure	- in port P - in ports A, B, Y	350 bar 250 bar
Flow range		…250 l/min
Nominal pressure ranges		…100 bar, …160 bar, …250 bar, …350 bar
Flow direction		see symbol
Hydraulic fluid		HL and HLP mineral oil to DIN 51 524; for other fluids, please contact BUCHER
Hydraulic fluid temperature range		-25 °C … +80 °C
Viscosity range		10…650 mm^2/s (cSt), recommended 15...250 mm^2/s (cSt)
Minimum fluid cleanliness Cleanliness class to ISO 4406 : 1999		class 20/18/15

3 Symbol

Function in P (inline model), with pilot-oil drain options to Y, A or B

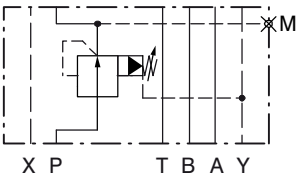

SDRA-P-16…

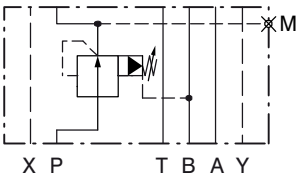

SDRA-PA-16…

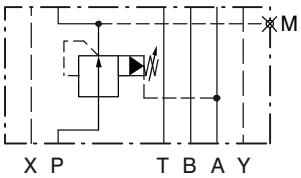

SDRA-PB-16…

4 Performance graphs

IMPORTANT!
Detailed performance data and other hydraulic characteristics can be found in the data sheet for the pressure-reducing cartridge that is fitted (data sheet ref. no. 400-P-285401-E).

ATTENTION!
The performance figures in the data sheet for the cartridge valve refer just to the cartridge itself. Take into account the additional pressure drop in the body into which it is fitted.

5 Dimensions & sectional view

With adjusting screw “S”

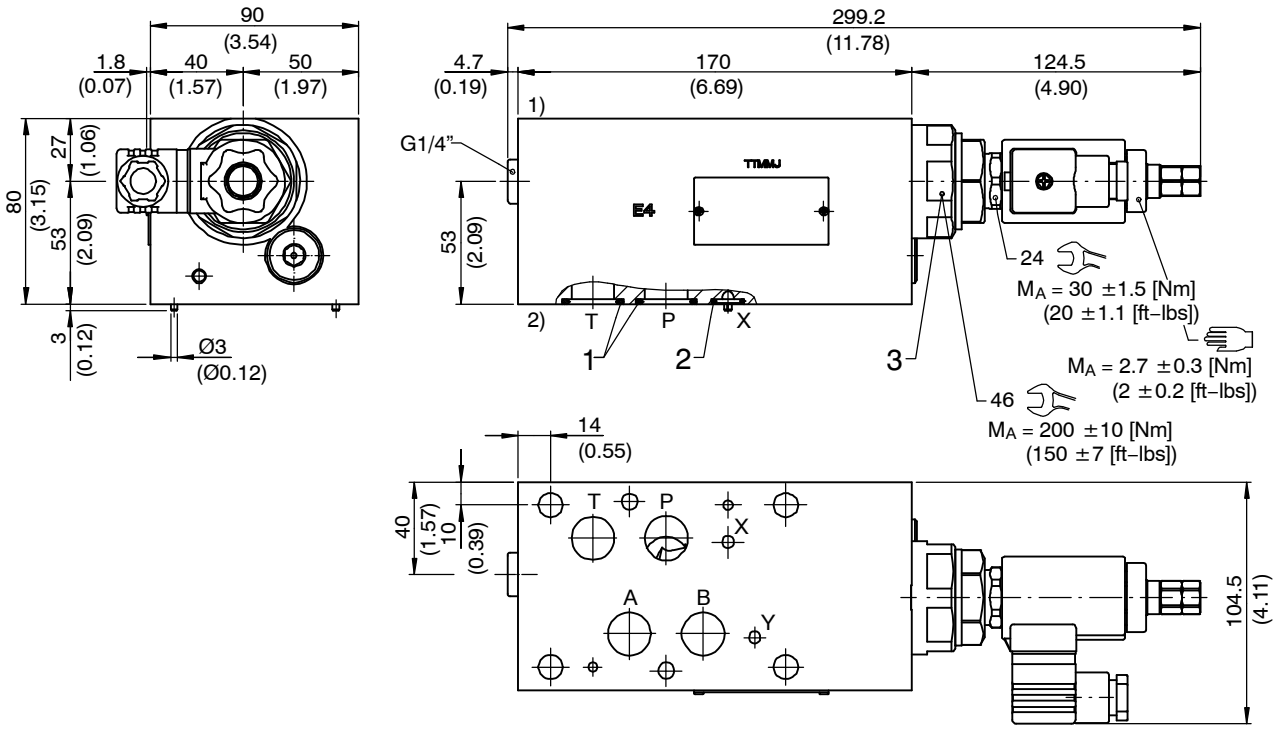

1) Valve side

2) Connections side (manifold side)

With hand-knob adjuster “H”

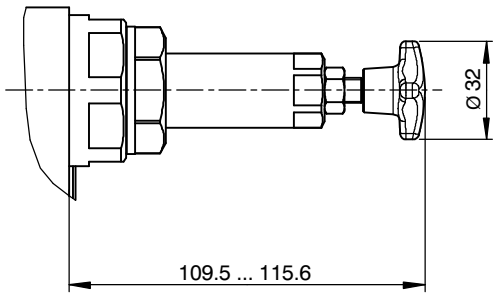

Adjusting screw with tamper-proof cap
(order separately in plain language)

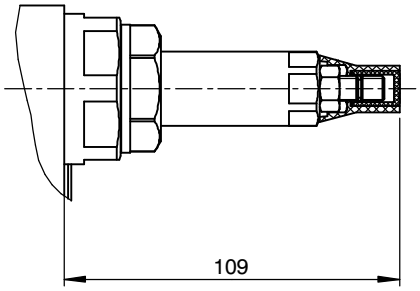

6 Installation information

IMPORTANT!
When installing the valve, make sure that the mating face (the manifold interface) aligns with the valve interface. Do not confuse the sandwich valve's manifold side and directional-valve side. Set the required pressure with the adjusting screw (s1). After you have set the valve, lock the adjusting screw with the lock nut.

ATTENTION!
Only qualified personnel with mechanical skills may carry out any maintenance work. Generally, the only work that should ever be undertaken is to check, and possibly replace, the seals. When changing seals, oil or grease the new seals thoroughly before fitting them.

IMPORTANT!
Valve settings can be sealed by fitting the tamper-proof cap. To fit the cap, the snap ring [3] has to be removed. Subsequent adjustment is only possible by destroying the tamper-proof cap.

NBR seal kit no. DS-319-N [4]

Item	Qty.	Description
1	4	O-ring no. 118 ∅ 21.89 x 2.62 N90
2	2	O-ring no. 110 ∅ 9,19 x 2,62 N90
3	1	NBR seal kit no. DS-344-N for pressure-reducing cartridge DRPB-5…

IMPORTANT!
[4] Seal kit with FKM (Viton) seals, no. DS-319-V

7 Ordering code

Ex. S | DR | A - P - 16 - 35 - S | _

S	=	sandwich design
DV	=	pressure-reducing cartridge, two stage
A ... Q	=	standard model - see relevant data sheets
Z ... R	=	special features - please consult BUCHER
P	=	Function in P, reduced pressure in P
PA	=	Function in P, reduced pressure in A
PB	=	Function in P, reduced pressure in B
16	=	ISO size 07 interface
35	=	pressure range …350 bar
25	=	pressure range …250 bar
16	=	pressure range …160 bar
10	=	pressure range …100 bar
S	=	screw adjuster (**standard**)
H	=	hand-knob adjuster
(blank)	=	NBR (Nitrile) seals (**standard**)
V	=	FKM (Viton) seals (special seals - please contact BUCHER)

IMPORTANT!
When required, the tamper-proof cap (the adjustment seal) must be ordered separately in plain language.

8 Related data sheets

Reference	(Old no.)	Description
400-P-070101	(i-51)	Size 07 interface to ISO 4401-07-07
400-P-285401	(D-5.36)	Pressure-reducing cartridge, size 16, series DRPB-5-16…
400-P-260111	(D-2.151)	Pilot pressure-relief cartridge, size 4, series DDPC-1L…

Notes

info.ch@bucherhydraulics.com www.bucherhydraulics.com

© 2022 by Bucher Hydraulics AG Frutigen, CH-3714 Frutigen
All rights reserved.
Data is provided for the purpose of product description only, and must not be construed as warranted characteristics in the legal sense. The information does not relieve users from the duty of conducting their own evaluations and tests. Because the products are subject to continual improvement, we reserve the right to amend the product specifications contained in this catalogue.

Classification:

Stacking Pressure-Reducing Valve, ISO Size 03

Q_{max} = 80 l/min (21 gpm), p_{max} = 350 bar (5000 psi)
Sandwich design, seated pilot stage, electrically operated
Series SWDRVPD…

- With cartridge valve, type WDRVPC-5…
- Interface to ISO 4401-03-02
- 2-pressure switching HI / LO
- Inline function in the P, A or B line
- Internal pilot-oil drain to port T
- 3 pressure ranges available
- With pressure-gauge port in function P
- Excellent stability over the whole pressure and flow range
- External cartridge parts are with zinc-nickel plating
- The slip-on coil can be rotated, and it can be replaced without opening the hydraulic envelope
- Various plug-connector systems and voltages are available

1 Description

Series SWDRVPD-5… sandwich valves are high performance, electrically operated pressure-reducing valves with a size 03 interface to ISO 4401-03-02. The main components of the valves are a sandwich body (stack-mounting body) and the screw-in cartridge (type WDRVPC-5…). They have a seated pilot stage and a spool-type main stage. These sandwich valves are used in mobile and industrial applications. In addition, a pressure gauge connection M (G1/4") is available on the secondary side in function P. All external parts of the cartridge are zinc-nickel plated according to DIN EN ISO 19 598 and are thus suitable for use in the harshest operating environments. The slip-on coils can be replaced without opening the hydraulic envelope and can be positioned at any angle through 360°. The sandwich body is sealed at its manifold side (the connections side) by means of O-rings fitted in counterbores.

2 Technical data

General characteristics	Description, value, unit
Designation	Stacking-pressure-reducing valve
Design	sandwich design, seated pilot stage, electrically operated
Mounting method	4 x ∅ 5.4 holes for M5 cap screws
Size	size 03 interface to ISO 4401-03-02 / DIN 24 340 A6
Weight	1.90 kg (0.42 lb)
Mounting attitude	unrestricted
Ambient temperature range	-25 °C … +50 °C (-13 °F … +122 °F)
Surface corrosion protection	without

Hydraulic characteristics		Description, value, unit	
Maximum operating pressure	- in port P, A, B - in port T	350 bar 250 bar	(5000 psi) (3600 psi)
Flow range		…80 l/min	(21 gpm)
Nominal pressure ranges		… 350 bar …250 bar …100 bar	(…5000 psi) (…3600 psi) (…1400 psi)
Flow direction		see symbol	
Hydraulic fluid		HL and HLP mineral oil to DIN 51 524; for other fluids, please contact BUCHER	
Hydraulic fluid temperature range		-25 °C … +80 °C	(-13 °F … +176 °F)
Viscosity range		10…500 mm^2/s (cSt), recommended 15...250 mm^2/s (cSt)	
Minimum fluid cleanliness Cleanliness class to ISO 4406 : 1999		class 20/18/15	

Electrical characteristics	Description, value, unit
Supply voltage	12 V DC, 24 V DC 115 V AC, 230 V AC (50 … 60 Hz)
Supply voltage tolerance	± 10 %
Nominal power consumption	V DC = 27 W V AC = 25 W
Relative duty cycle	100 %
Protection class to ISO 20 653 / EN 60 529	IP 65 / IP 67 / IP 69K, see “Ordering code” (with appropriate mating connector and proper fitting and sealing)
Electrical connection	DIN EN 175301-803, 3-pin 2 P+E (standard) for other connectors, see “Ordering code”

3 Symbol

Function in P

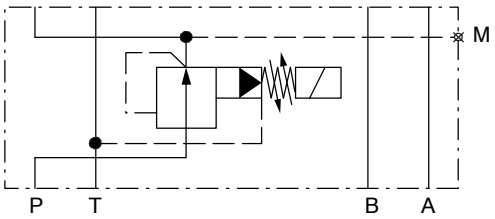

SWDRVPD-…-P-E-6…

Function in A

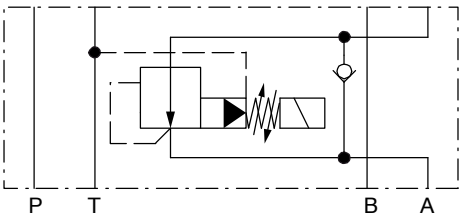

SWDRVPD-…-AZR-C-6…

Function in B

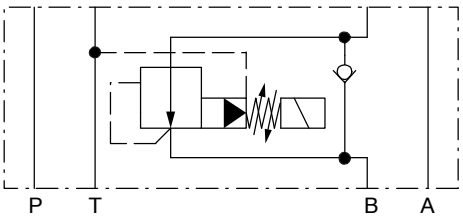

SWDRVPD-…-BZR-D-6…

4 Performance graphs

IMPORTANT!
Detailed performance data and other hydraulic characteristics can be found in the data sheet for the pressure-reducing cartridge that is fitted (data sheet ref. no. 400-P-290501-EN).

ATTENTION!
The performance figures in the data sheet for the cartridge valve refer just to the cartridge itself. Take into account the additional pressure drop in the body into which it is fitted.

5 Dimensions & sectional view

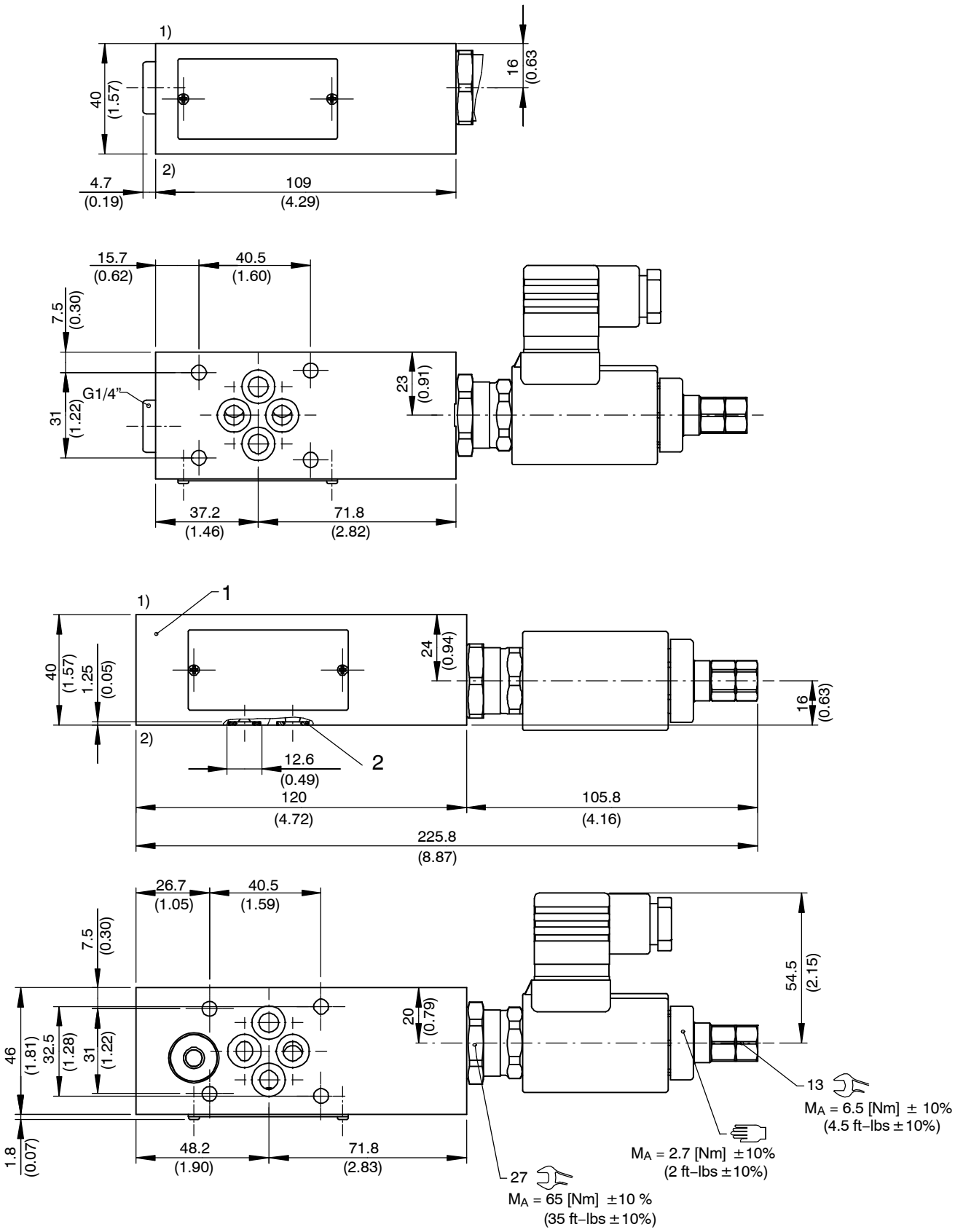

1) Valve side

2) Connections side (manifold side)

6 Installation information

IMPORTANT!
When installing the valve, make sure that the mating face (the manifold interface) aligns with the-valve interface. Do not confuse the sandwich valve's manifold side and directional-valve side. Information on setting the pressures can be found in the data sheet for the pressure-reducing cartridge that is fitted (ref. no. 400-P-290501-EN).

ATTENTION!
Only qualified personnel with mechanical skills may carry out any maintenance work. Generally, the only work that should ever be undertaken is to check, and possibly replace, the seals. When changing seals, oil or grease the new seals thoroughly before fitting them.

NBR seal kit no. DS-497-N [3)]

Item	Qty.	Description
1	4	O-ring no. 012 ∅ 9,25 x 1,78 N90
2	1	NBR seal kit no. DS-261-N for pressure-reducing cartridge WDRVPC-5…

IMPORTANT!
3) Seal kit with FKM (Viton) seals, no. DS-497-V

7 Ordering code

Ex. S | WDRVP | D - 5 | D | O - 35 - AZR-C - 6 | _ | 24 | D | _

S = sandwich design
WDRVP = electr. operated, pressure-reducing valve
D ... Q = standard model - see relevant data sheets
Z ... R = special features - please consult BUCHER
5 = pressure function 5 (internal pilot-oil drain to T)
D = cavity type DD
O = de-energized open
35 = pressure range … 350 bar (…5000 psi)
25 = pressure range … 250 bar (…3600 psi)
10 = pressure range … 100 bar (…1400 psi)
P-E = function in P stacking body-type E
AZR-C = function in A in inlet with bypass check valve, plate type C
BZR-D = function in B in inlet with bypass check valve, plate type D
6 = ISO size 03 interface
(blank) = NBR (Nitrile) seals (**standard**)
V = FKM (Viton) seals
(special seals - please contact BUCHER)
... = voltage e.g. **24** (24 V)
D = current DC
A = current AC
(blank) = DIN EN 175301-803 connection with mating plug (**standard, IP 65**)
M100 = DIN EN 175301-803 connection without mating plug
C = Kostal plug connection (IP 65)
JT = Junior Timer radial plug connection (with protection diode, IP65)
IT = Junior Timer axial plug connection (with protection diode, IP65)
D = Deutsch plug connection 45° DT04-2P (IP67/69K)
DT = Deutsch plug connection 45° DT04-2P (with protection diode, IP67/69K)
S = AMP Superseal 1.5 (IP67) / Metri-Pack 150 (IP65) plug connection
F = flying leads (500 mm)
} mating plug not supplied

8 Related data sheets

Reference	Description
400-P-030501	Size 03 interface to ISO 4401-03-02
400-P-120110	Coils for screw-in cartridge valves
400-P-290501	El. operated pressure-reducing cartridge, size 10, series WDRVPC-5…

info.ch@bucherhydraulics.com www.bucherhydraulics.com

© 2021 by Bucher Hydraulics AG Frutigen, CH-3714 Frutigen
All rights reserved.
Data is provided for the purpose of product description only, and must not be construed as warranted characteristics in the legal sense. The information does not relieve users from the duty of conducting their own evaluations and tests. Because the products are subject to continual improvement, we reserve the right to amend the product specifications contained in this catalogue.

Classification: 430.305.305.330.330.300

Stacking Pressure-Reducing Valve, ISO Size 05

Q_{max} = 140 l/min (37 gpm), p_{max} = 350 bar (5000 psi)
Sandwich design, seated pilot stage, electrically operated
Series SWDRVPD…

- With cartridge valve, type WDRVPC-5
- Interface to ISO 4401-05-04
- 2-pressure switching HI / LO
- Inline function in the P, A or B line
- Internal pilot-oil drain to port T
- 3 pressure ranges available
- With pressure-gauge port in function P
- Excellent stability over the whole pressure and flow range
- External cartridge parts are with zinc-nickel plating
- The slip-on coil can be rotated, and it can be replaced without opening the hydraulic envelope
- Various plug-connector systems and voltages are available

1 Description

Series SWDRVPD-5… sandwich valves are high performance, electrically operated pressure-reducing valves with a size 05 interface to ISO 4401-05-04. The main components of the valves are a sandwich body (stack-mounting body) and the screw-in cartridge (type WDRVPC-5…). They have a seated pilot stage and a spool-type main stage. These sandwich valves are used in mobile and industrial applications. In addition, a pressure gauge connection M (G1/4") available on the secondary side in function P. All external parts of the cartridge are zinc-nickel plated according to DIN EN ISO 19 598 and are thus suitable for use in the harshest operating environments. The slip-on coils can be replaced without opening the hydraulic envelope and can be positioned at any angle through 360°. The sandwich body is sealed at its manifold side (the connections side) by means of O-rings fitted in counterbores.

2 Technical data

General characteristics	Description, value, unit
Designation	Stacking-pressure-reducing valve
Design	sandwich design, seated pilot stage, electrically operated
Mounting method	4 x ∅ 6.5 holes for M6 cap screws
Size	size 07 interface to ISO 4401-05-04 / DIN 24 340 A10
Weight	8.75 kg (19.29 lb)
Mounting attitude	unrestricted
Ambient temperature range	-25 °C … +50 °C (-13 °F … +122 °F)
Surface corrosion protection	without

Hydraulic characteristics		Description, value, unit	
Maximum operating pressure	- in port P, A, B - in port T	350 bar 250 bar	(5000 psi) (3600 psi)
Flow range		…140 l/min	(37 gpm)
Nominal pressure ranges		… 350 bar …250 bar …100 bar	(…5000 psi) (…3600 psi) (…1400 psi)
Flow direction		see symbol	
Hydraulic fluid		HL and HLP mineral oil to DIN 51 524; for other fluids, please contact BUCHER	
Hydraulic fluid temperature range		-25 °C … +80 °C	(-13 °F … +176 °F)
Viscosity range		10…500 mm^2/s (cSt), recommended 15...250 mm^2/s (cSt)	
Minimum fluid cleanliness Cleanliness class to ISO 4406 : 1999		class 20/18/15	

Electrical characteristics	Description, value, unit
Supply voltage	12 V DC, 24 V DC 115 V AC, 230 V AC (50 … 60 Hz)
Supply voltage tolerance	± 10 %
Nominal power consumption	V DC = 27 W V AC = 25 W
Relative duty cycle	100 %
Protection class to ISO 20 653 / EN 60 529	IP 65 / IP 67 / IP 69K, see “Ordering code” (with appropriate mating connector and proper fitting and sealing)
Electrical connection	DIN EN 175301-803, 3-pin 2 P+E (standard) for other connectors, see “Ordering code”

3 Symbol

Function in P

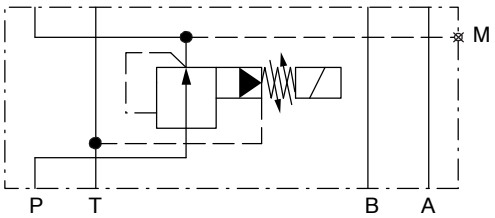

SWDRVPD-…-P-E-10…

Function in A

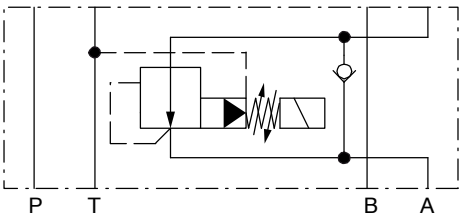

SWDRVPD-…-AZR-C-10…

Function in B

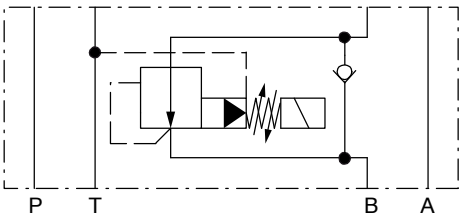

SWDRVPD-…-BZR-D-10…

4 Performance graphs

IMPORTANT!
Detailed performance data and other hydraulic characteristics can be found in the data sheet for the pressure-reducing cartridge that is fitted (data sheet ref. no. 400-P-295401-EN).

ATTENTION!
The performance figures in the data sheet for the cartridge valve refer just to the cartridge itself. Take into account the additional pressure drop in the body into which it is fitted.

5 Dimensions & sectional view

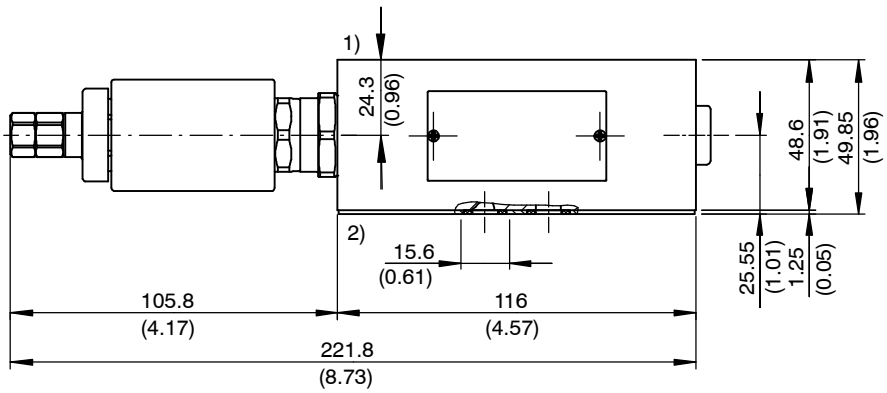

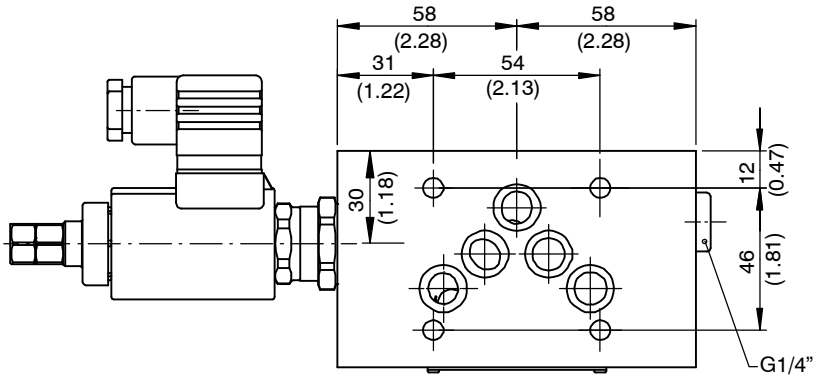

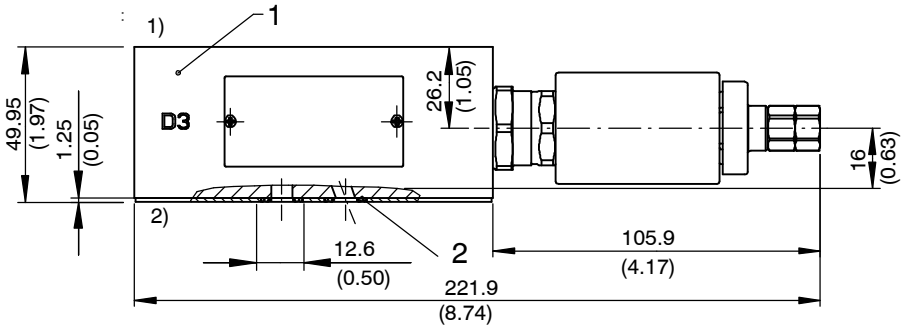

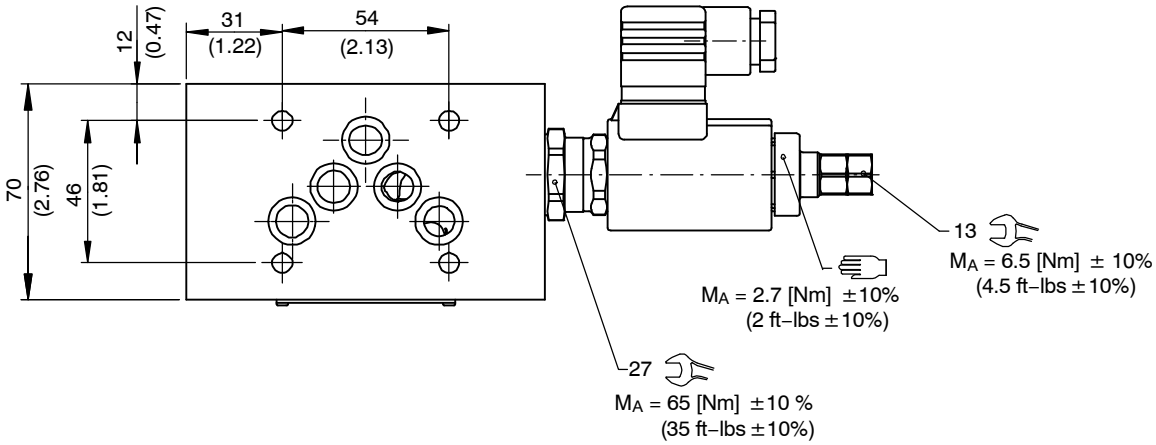

1) Valve side

2) Connections side (manifold side)

6 Installation information

IMPORTANT!
When installing the valve, make sure that the mating face (the manifold interface) aligns with the valve interface. Do not confuse the sandwich valve's manifold side and directional-valve side. Information on setting the pressures can be found in the data sheet for the pressure-reducing cartridge that is fitted (ref. no. 400-P-295401-EN).

ATTENTION!
Only qualified personnel with mechanical skills may carry out any maintenance work. Generally, the only work that should ever be undertaken is to check, and possibly replace, the seals. When changing seals, oil or grease the new seals thoroughly before fitting them.

NBR seal kit no. DS-493-N [3)]

Item	Qty.	Description
1	5	O-ring no. 014 ∅ 12,42 x 1,78 N90
2	1	NBR seal kit no. DS-261-N for pressure-reducing cartridge WDRVPC-5…

IMPORTANT!
[3)] Seal kit with FKM (Viton) seals, no. DS-493-V

7 Ordering code

Ex. S | WDRVP | D - 5 | D | O - 35 - AZR-C - 10 | _ | 24 | D | _

S	=	sandwich design
WDRVP	=	electr. operated, pressure-reducing valve
D ... Q	=	standard model - see relevant data sheets
Z ... R	=	special features - please consult BUCHER
5	=	pressure function 5 (internal pilot-oil drain to T)
D	=	cavity type DD
O	=	de-energized open
35	=	pressure range … 350 bar (…5000 psi)
25	=	pressure range … 250 bar (…3600 psi)
10	=	pressure range … 100 bar (…1400 psi)
P-E	=	function in P stacking body-type E
AZR-C	=	function in A in inlet with bypass check valve, plate type C
BZR-D	=	function in B in inlet with bypass check valve, splate type D
10	=	ISO size 05 interface
(blank)	=	NBR (Nitrile) seals (**standard**)
V	=	FKM (Viton) seals (special seals - please contact BUCHER)
...	=	voltage e.g. **24** (24 V)
D	=	current DC
A	=	current AC
(blank)	=	DIN EN 175301-803 connection with mating plug (**standard, IP 65**)
M100	=	DIN EN 175301-803 connection without mating plug
C	=	Kostal plug connection (IP 65)
JT	=	Junior Timer radial plug connection (with protection diode, IP65)
IT	=	Junior Timer axial plug connection (with protection diode, IP65)
D	=	Deutsch plug connection 45° DT04-2P (IP67/69K)
DT	=	Deutsch plug connection 45° DT04-2P (with protection diode, IP67/69K)
S	=	AMP Superseal 1.5 (IP67) / Metri-Pack 150 (IP65) plug connection
F	=	flying leads (500 mm)

mating plug not supplied

8 Related data sheets

Reference	Description
400-P-050101	Size 05 interface to ISO 4401-05-04
400-P-120110	Coils for screw-in cartridge valves
400-P-290501	El. operated pressure-reducing cartridge, size 10, series WDRVPC-5…

info.ch@bucherhydraulics.com www.bucherhydraulics.com

© 2021 by Bucher Hydraulics AG Frutigen, CH-3714 Frutigen
All rights reserved.
Data is provided for the purpose of product description only, and must not be construed as warranted characteristics in the legal sense. The information does not relieve users from the duty of conducting their own evaluations and tests. Because the products are subject to continual improvement, we reserve the right to amend the product specifications contained in this catalogue.

Classification: 430.305.305.330.330.300

Proportional Pressure-Reducing Valve, ISO Size 03

Q_{max} = 60 l/min, p_{max} = 315 bar
Sandwich design, seated pilot stage
Series SDRPSB-5…

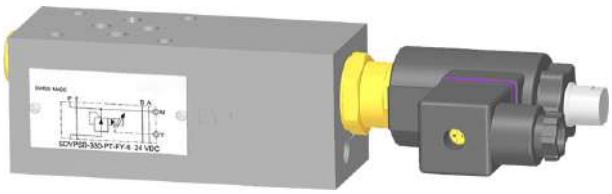

- With cartridge valve, type DRPSA-5D…-10…
- Interface to ISO 4401-03-02
- 5 pressure ranges available
- With pressure-gauge port
- External pilot-oil drain
- Very stable operation
- External cartridge parts are with zinc-nickel plating
- The slip-on coil can be rotated, and it can be replaced without opening the hydraulic envelope
- Various plug-connector systems and voltages are available

1 Description

Series SDRPSB-5… sandwich valves are high performance, proportional pressure-reducing valves with a size 03 interface to 4401-03-02. The main components of the valves are a sandwich body (stack-mounting body) and the screw-in, proportional pressure-reducing cartridge, type DRPSA-5D…-10. These sandwich valves are used to reduce the system pressure in mobile and industrial applications. All external parts of the cartridge are zinc-nickel plated according to DIN EN ISO 19 598 and are thus suitable for use in the harshest operating environments. The slip-on coils can be replaced without opening the hydraulic envelope and can be positioned at any angle through 360°. The sandwich body is sealed at its manifold side (the connections side) by means of O-rings fitted in counterbores.

2 Symbol

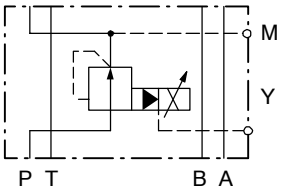

SDRPSB-5 … -P-EY-6…

3 Technical data

General characteristics	Description, value, unit
Designation	proportional pressure-reducing valve
Design	sandwich design, seated pilot, spool-type main stage
Mounting method	4 x ∅ 5.4 holes for M5 cap screws
Size	size 03 interface to ISO 4401-03-02 / DIN 24 340 A6
Weight	2.15 kg
Mounting attitude	unrestricted
Ambient temperature range	-25 °C … +50 °C
Surface corrosion protection	without

WWW.SUMY.IR

Hydraulic characteristics	Description, value, unit
Maximum operating pressure	315 bar
Flow range	…60 l/min
Nominal pressure ranges	…60 bar, …100 bar, …160 bar, …250 bar, …315 bar
Flow direction	see symbol
Hydraulic fluid	HL and HLP mineral oil to DIN 51 524; for other fluids, please contact BUCHER
Hydraulic fluid temperature range	-25 °C … +70 °C
Viscosity range	15…380 mm^2/s (cSt), recommended 20...130 mm^2/s (cSt)
Minimum fluid cleanliness Cleanliness class to ISO 4406 : 1999	class 18/16/13

Electrical characteristics	Description, value, unit
Supply voltage	12 V DC, 24 V DC
Supply voltage tolerance	± 10 %
Control current	12 V = 0…1400 mA, 24 V = 0…750 mA
Power consumption at max. control current	max. 19 W
Coil resistance R - cold value at 20 °C - max. warm value	12 V = 5.8 Ω / 24 V = 21 Ω 12 V = 8.6 Ω / 24 V = 32 Ω
Recommended PWM frequency (dither)	200 Hz
Hysteresis with PWM	2…4 % I_N
Reversal error with PWM	1…3 % I_N
Sensitivity with PWM	≤ 1 % I_N
Reproducibility with PWM	< 2 % p_N
Relative duty cycle	100 %
Protection class to ISO 20 653 / EN 60 529	IP 65 / IP 67 / IP 69K, see “Ordering code” (with appropriate mating connector and proper fitting and sealing)
Electrical connection	DIN EN 175301-803, 3-pin 2 P+E (standard) for other connectors, see “Ordering code”

4 Performance graphs

IMPORTANT!
Detailed performance data and other hydraulic characteristics can be found in the data sheet for the proportional pressure-reducing cartridge that is fitted (data sheet ref. no. 400-P-581501-E).

ATTENTION!
The performance figures in the data sheet for the cartridge valve refer just to the cartridge itself. Take into account the additional pressure drop in the body into which it is fitted.

5 Dimensions & sectional view

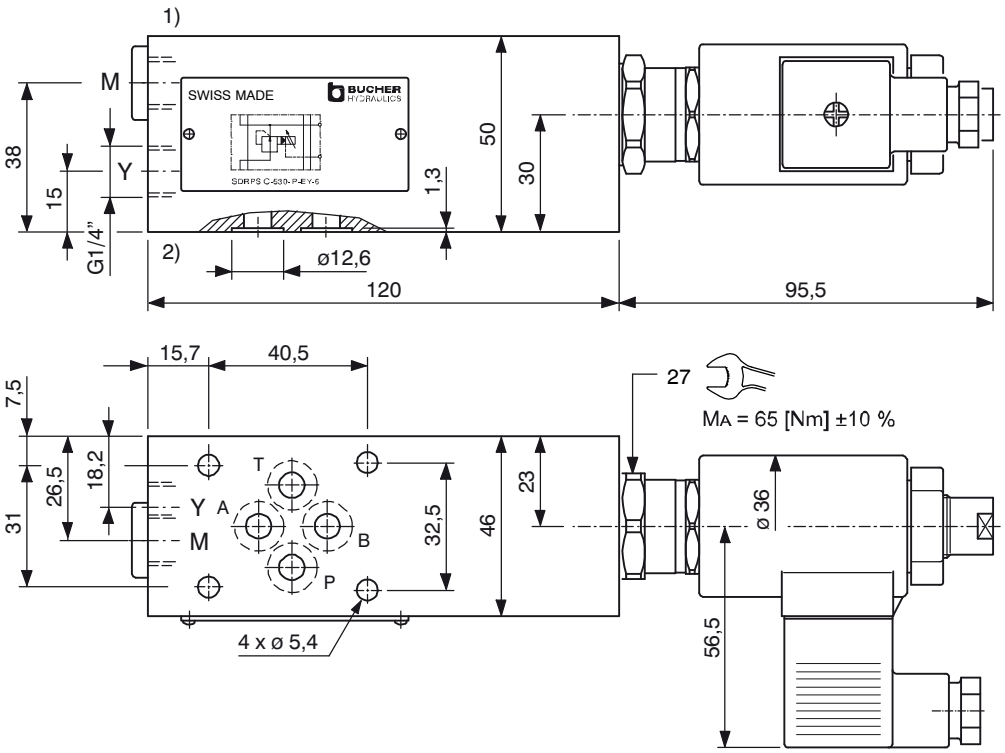

1) Valve side

2) Connections side (manifold side)

Y Pilot-oil drain (to tank without back-pressure)

M Pressure-gauge port (with G 1/4" threaded plug, ED VSTI)

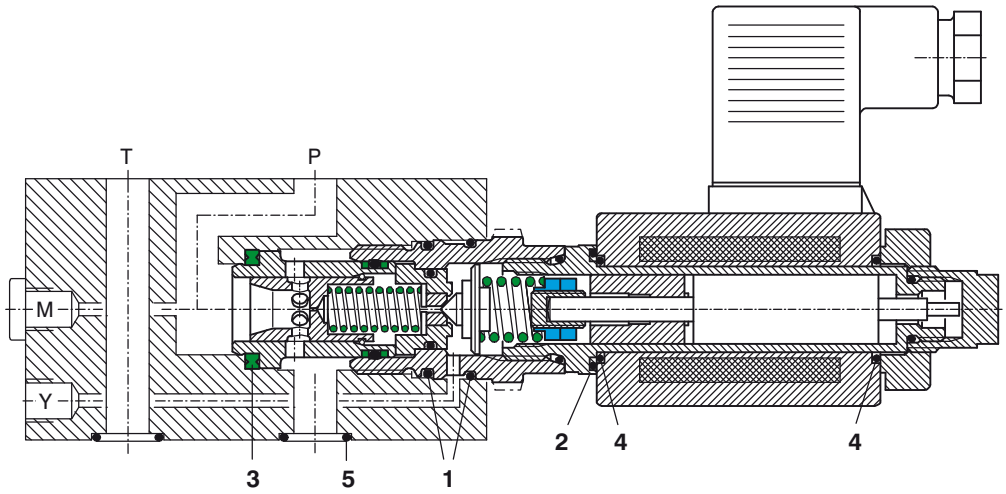

6 Installation information

IMPORTANT!
When installing the valve, make sure that the mating face (the manifold interface) aligns with the valve interface. Do not confuse the sandwich valve's manifold side and directional-valve side. No adjustments are necessary, since the cartridges are set in the factory.

ATTENTION!
To achieve the proportional pressure-reducing cartridge's maximum performance rating, fit the solenoid coil as shown (with the plug pins at the right). Use the specified tightening torque when fitting the cartridge.

ATTENTION!
Only qualified personnel with mechanical skills may carry out any maintenance work. Generally, the only work that should ever be undertaken is to check, and possibly replace, the seals. When changing seals, oil or grease the new seals thoroughly before fitting them.

Seal kit no. DS-345-N

Item	Qty.	Description	
1	2	O-ring no. 020	∅ 21.95 x 1.78 N90
2	1	O-ring	∅ 18.00 x 2.00 Viton
3	1	Seal ring	∅ 22.10 / 16.50 x 2.50
4	2	O-ring	∅ 16.00 x 2.00 Viton
5	4	O-ring no. 012	∅ 9.25 x 1.78 N90

7 Ordering code

Ex. S DRP S B - 5 30 - P - EY - 6 - _ 24 D - _

S	=	sandwich valve
DRP	=	pressure-reducing cartridge, two stage
S	=	standard solenoid (proportional)
A ... Q	=	standard model - see relevant data sheets
Z ... R	=	special features - please consult BUCHER
5	=	pressure function 5 (external pilot drain to Y)
30	=	pressure range …315 bar
25	=	pressure range …250 bar
16	=	pressure range …160 bar
10	=	pressure range …100 bar
06	=	pressure range … 60 bar
P	=	function in P
EY	=	sandwich body type
6	=	ISO size 03 interface
(blank)	=	NBR (Nitrile) seals (**standard**)
V	=	FKM (Viton) seals (special seals - please contact BUCHER)
...	=	voltage e.g. **24** (24 V)
D	=	current DC
A	=	current AC
(blank)	=	DIN EN 175301-803 connection with mating plug (**standard, IP 65**)
M100	=	DIN EN 175301-803 connection without mating plug
C	=	Kostal plug connection (IP 65)
JT	=	Junior Timer radial plug connection (with protection diode, IP65)
IT	=	Junior Timer axial plug connection (with protection diode, IP65)
D	=	Deutsch plug connection 45° DT04-2P (IP67/69K)
DT	=	Deutsch plug connection 45° DT04-2P (with protection diode, IP67/69K)
S	=	AMP Superseal 1.5 (IP67) / Metri-Pack 150 (IP65) plug connection
F	=	flying leads (500 mm)

mating plug not supplied

8 Related data sheets

Reference	(Old no.)	Description
400-P-030501	(i-31)	Size 03 interface to ISO 4401-03-02
400-P-120110	(W-2.141)	Coils for screw-in cartridge valves
400-P-581501	(P-51.4 A_2)	Proportional pressure-reducing valve, size 10, series DRPSA-5D…-10…

info.ch@bucherhydraulics.com www.bucherhydraulics.com

© 2021 by Bucher Hydraulics AG Frutigen, CH-3714 Frutigen
All rights reserved.
Data is provided for the purpose of product description only, and must not be construed as warranted characteristics in the legal sense. The information does not relieve users from the duty of conducting their own evaluations and tests. Because the products are subject to continual improvement, we reserve the right to amend the product specifications contained in this catalogue.

Classification: 430.305.305.330.315.310

Proportional Pressure-Reducing Valve, ISO Size 05

Q_{max} = 120 l/min, p_{max} = 315 bar
Sandwich design, seated pilot stage
Series SDRPSA-5…

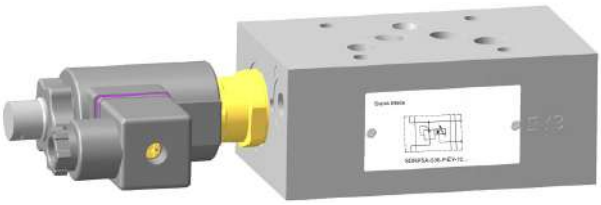

- With cartridge valve, type DRPSA-5D…-10…
- Interface to ISO 4401-05-04
- 5 pressure ranges available
- With pressure-gauge port
- External pilot-oil drain
- Very stable operation
- External cartridge parts are with zinc-nickel plating
- The slip-on coil can be rotated, and it can be replaced without opening the hydraulic envelope
- Various plug-connector systems and voltages are available

1 Description

Series SDRPSA-5… sandwich valves are high performance, proportional pressure-reducing valves with a size 05 interface to 4401-05-04. The main components of the valves are a sandwich body (stack-mounting body) and the screw-in, proportional pressure-reducing cartridge, type DRPSA-5D…-10. These sandwich valves are used to reduce the system pressure in mobile and industrial applications. All external parts of the cartridge are zinc-nickel plated according to DIN EN ISO 19 598 and are thus suitable for use in the harshest operating environments. The slip-on coils can be replaced without opening the hydraulic envelope and can be positioned at any angle through 360°. The sandwich body is sealed at its manifold side (the connections side) by means of O-rings fitted in a seal plate that is supplied with the valve.

2 Symbol

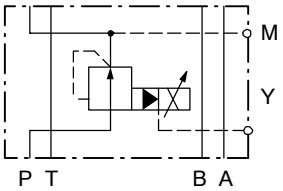

SDRPSA-5 … -P-EY-10…

3 Technical data

General characteristics	Description, value, unit
Designation	proportional pressure-reducing valve
Design	sandwich design, seated pilot, spool-type main stage
Mounting method	4 x ∅ 6.5 holes for M6 cap screws
Size	size 05 interface to ISO 4401-05-04 / DIN 24 340 A10
Weight	3.25 kg
Mounting attitude	unrestricted
Ambient temperature range	-25 °C … +50 °C
Surface corrosion protection	without

WWW.SUMY.IR

Hydraulic characteristics	Description, value, unit
Maximum operating pressure	315 bar
Flow range	…120 l/min
Nominal pressure ranges	…60 bar, …100 bar, …160 bar, …250 bar, …315 bar
Flow direction	see symbol
Hydraulic fluid	HL and HLP mineral oil to DIN 51 524; for other fluids, please contact BUCHER
Hydraulic fluid temperature range	-25 °C … +70 °C
Viscosity range	15…380 mm^2/s (cSt), recommended 20...130 mm^2/s (cSt)
Minimum fluid cleanliness Cleanliness class to ISO 4406 : 1999	class 18/16/13

Electrical characteristics	Description, value, unit
Supply voltage	12 V DC, 24 V DC
Supply voltage tolerance	± 10 %
Control current	12 V = 0…1400 mA, 24 V = 0…750 mA
Power consumption at max. control current	max. 19 W
Coil resistance R - cold value at 20 °C - max. warm value	12 V = 5.8 Ω / 24 V = 21 Ω 12 V = 8.6 Ω / 24 V = 32 Ω
Recommended PWM frequency (dither)	200 Hz
Hysteresis with PWM	2…4 % I_N
Reversal error with PWM	1…3 % I_N
Sensitivity with PWM	≤ 1 % I_N
Reproducibility with PWM	< 2 % p_N
Relative duty cycle	100 %
Protection class to ISO 20 653 / EN 60 529	IP 65 / IP 67 / IP 69K, see “Ordering code” (with appropriate mating connector and proper fitting and sealing)
Electrical connection	DIN EN 175301-803, 3-pin 2 P+E (standard) for other connectors, see “Ordering code”

4 Performance graphs

IMPORTANT!
Detailed performance data and other hydraulic characteristics can be found in the data sheet for the proportional pressure-reducing cartridge that is fitted (data sheet ref. no. 400-P-581501-E).

ATTENTION!
The performance figures in the data sheet for the cartridge valve refer just to the cartridge itself. Take into account the additional pressure drop in the body into which it is fitted.

5 Dimensions & sectional view

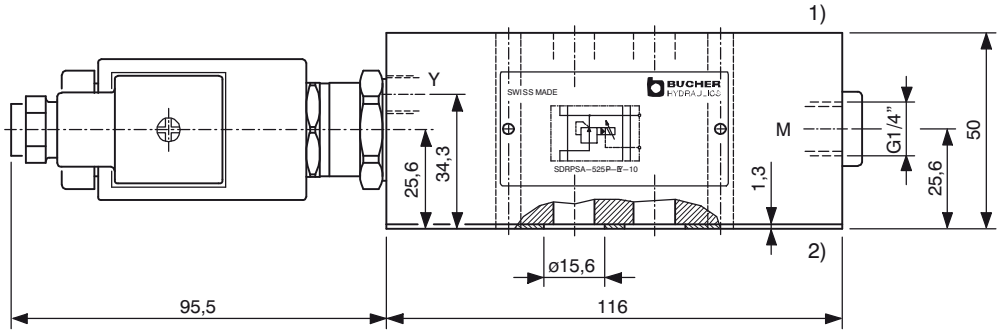

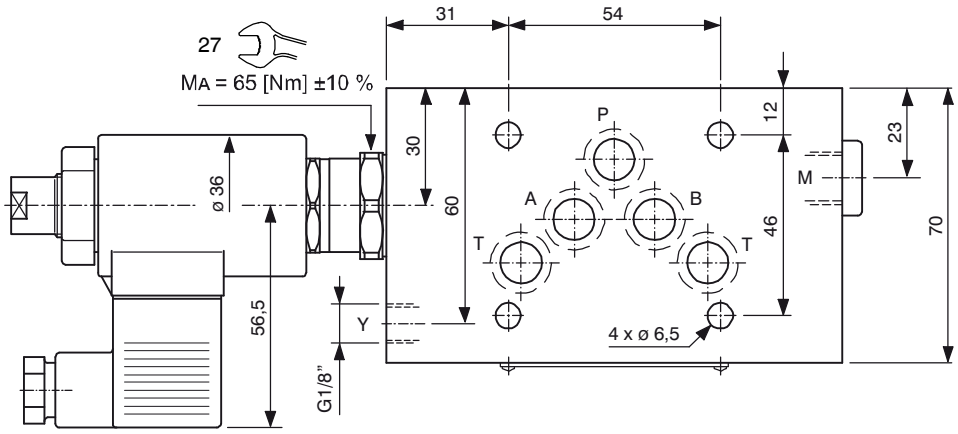

1) Valve side

2) Connections side (manifold side)

Y Pilot-oil drain (to tank without back-pressure)

M Pressure-gauge port (with G 1/4" threaded plug, ED VSTI)

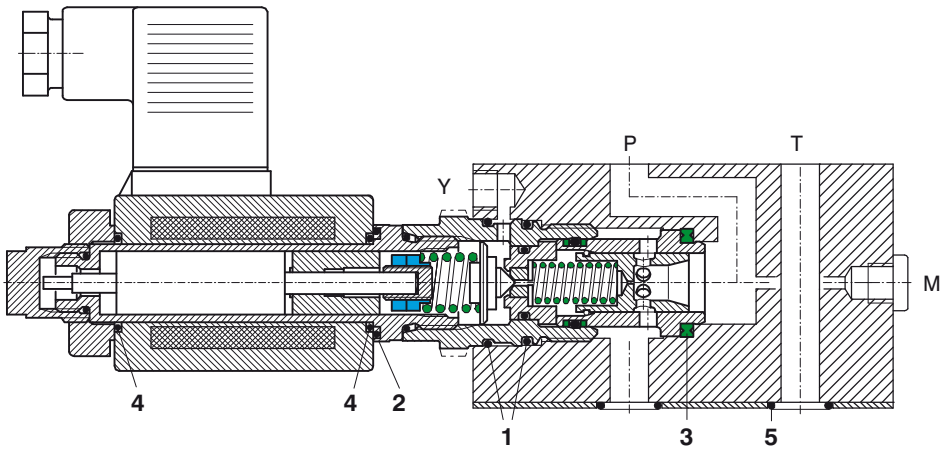

6 Installation information

IMPORTANT!
When installing the valve, make sure that the mating face (the manifold interface) aligns with the valve interface. Do not confuse the sandwich valve's manifold side and directional-valve side. No adjustments are necessary, since the cartridges are set in the factory.

ATTENTION!
To achieve the proportional pressure-reducing cartridge's maximum performance rating, fit the solenoid coil as shown (with the plug pins at the left). Use the specified tightening torque when fitting the cartridge.

WWW.SUMY.IR

ATTENTION!
Only qualified personnel with mechanical skills may carry out any maintenance work. Generally, the only work that should ever be undertaken is to check, and possibly replace, the seals. When changing seals, oil or grease the new seals thoroughly before fitting them.

Seal kit no. DS-339-N

Item	Qty.	Description	
1	2	O-ring no. 020	∅ 21.95 x 1.78 N90
2	1	O-ring	∅ 18.00 x 2.00 Viton
3	1	Seal ring	∅ 22.10 / 16.50 x 2,50
4	2	O-ring	∅ 16.00 x 2.00 Viton
5	5	O-ring no. 014	∅ 12.42 x 1.78 N90

7 Ordering code

Ex. S DRP S A - 5 30 - P - EY - 10 - _ 24 D - _

S = sandwich valve
DRP = pressure-reducing cartridge, two stage
S = standard solenoid (proportional)
A ... Q = standard model - see relevant data sheets
Z ... R = special features - please consult BUCHER
5 = pressure function 5 (external pilot drain to Y)
30 = pressure range …315 bar
25 = pressure range …250 bar
16 = pressure range …160 bar
10 = pressure range …100 bar
06 = pressure range … 60 bar
P = function in P
EY = sandwich body type
10 = ISO size 05 interface
(blank) = NBR (Nitrile) seals (**standard**)
V = FKM (Viton) seals
(special seals - please contact BUCHER)
... = voltage e.g. **24** (24 V)
D = current DC
A = current AC
(blank) = DIN EN 175301-803 connection with mating plug (**standard, IP 65**)
M100 = DIN EN 175301-803 connection without mating plug

C = Kostal plug connection (IP 65)
JT = Junior Timer radial plug connection (with protection diode, IP65)
IT = Junior Timer axial plug connection (with protection diode, IP65)
D = Deutsch plug connection 45° DT04-2P (IP67/69K)
DT = Deutsch plug connection 45° DT04-2P (with protection diode, IP67/69K)
S = AMP Superseal 1.5 (IP67) / Metri-Pack 150 (IP65) plug connection
F = flying leads (500 mm)
} mating plug not supplied

8 Related data sheets

Reference	(Old no.)	Description
400-P-050101	(i-41)	Size 05 interface to ISO 4401-05-04
400-P-120110	(W-2.141)	Coils for screw-in cartridge valves
400-P-581501	(P-51.4 A_2)	Proportional pressure-reducing valve, size 10, series DRPSA-5D…-10…
400-P-810901	(G-45)	Seal plate, type DB-10

info.ch@bucherhydraulics.com www.bucherhydraulics.com

© 2021 by Bucher Hydraulics AG Frutigen, CH-3714 Frutigen
All rights reserved.
Data is provided for the purpose of product description only, and must not be construed as warranted characteristics in the legal sense. The information does not relieve users from the duty of conducting their own evaluations and tests. Because the products are subject to continual improvement, we reserve the right to amend the product specifications contained in this catalogue.

Classification: 430.305.305.330.315.310

Proportional Pressure-Reducing Valve, ISO Size 07

Q_{max} = 250 l/min, p_{max} = 350 bar
Sandwich design, electrically operated, seated pilot stage
Series SDRPSA-5…

- With cartridge valve, type DRPSB-5…-16…
- Interface to ISO 4401-07-07
- Inline function in the P line
- External pilot-oil drain
- 4 pressure ranges available
- With pressure-gauge port
- Excellent stability over the whole pressure and flow range
- External cartridge parts are zinc plated and chromited (CrVI-free)
- The slip-on coil can be rotated, and it can be replaced without opening the hydraulic envelope
- Various plug-connector systems and voltages are available

1 Description

Series SDRPSA-5… sandwich valves are high performance, electrically operated proportional pressure-reducing valves with a size 07 interface to ISO 4401-07-07. The main components of the valves are a sandwich body (stack-mounting body) and the screw-in cartridge (type DRPSB-5…-16…). The pressure-reducing cartridges have a seated pilot stage, and the main stage is designed on the sliding-spool principle. Four pressure ranges are available for this inline function in P with external pilot-oil drain through port Y. These valves reduce the pressure in the secondary side of the P line to a level that is proportional to the solenoid current, which depends on the demand signal to the electronics. Thanks to the external pilot-oil drain, the reduced pressure is unaffected by any pressure fluctuations. A pressure-gauge port M (G1/4") is also provided in the secondary circuit. These sandwich valves are used to reduce the system pressure in mobile and industrial applications. All external parts of the cartridge are zinc-nickel plated according to DIN EN ISO 19 598 and are thus suitable for use in the harshest operating environments. The slip-on coils can be replaced without opening the hydraulic envelope and can be positioned at any angle through 360°. The sandwich body is sealed at its manifold side (the connections side) by means of O-rings fitted in counterbores.

2 Technical data

General characteristics	Description, value, unit
Designation	proportional pressure-reducing valve
Design	sandwich design, electrically operated, seated pilot stage
Mounting method	4 x ∅ 10.5 holes for M10 cap screws 2 x ∅ 7 holes for M6 cap screws
Size	size 07 interface to ISO 4401-07-07 / DIN 24 340 A16
Weight	8.75 kg
Mounting attitude	unrestricted
Ambient temperature range	-25 °C … +50 °C
Surface corrosion protection	without

Hydraulic characteristics		Description, value, unit
Maximum operating pressure	- in port P - in port Y	350 bar unpressurised
Flow range		…250 l/min
Nominal pressure ranges		…100 bar, …160 bar, …250 bar, …350 bar
Flow direction		see symbol
Hydraulic fluid		HL and HLP mineral oil to DIN 51 524; for other fluids, please contact BUCHER
Hydraulic fluid temperature range		-25 °C … +70 °C
Viscosity range		15…380 mm^2/s (cSt), recommended 20...130 mm^2/s (cSt)
Minimum fluid cleanliness Cleanliness class to ISO 4406 : 1999		class 18/16/13

Electrical characteristics		Description, value, unit
Supply voltage		12 V DC, 24 V DC
Control current		12 V = 0…1400 mA, 24 V = 0…750 mA
Coil resistance R	- cold value at 20 °C - max. warm value	12 V = 5.8 Ω / 24 V = 21 Ω 12 V = 8.6 Ω / 24 V = 32 Ω
Recommended PWM frequency (dither)		200 Hz
Hysteresis with PWM		2…4 % I_N
Reversal error with PWM		2…5 % I_N
Sensitivity with PWM		≤ 1 % I_N
Reproducibility with PWM		< 1.5 % p_N
Relative duty cycle		100 %
Protection class to ISO 20 653 / EN 60 529		IP 65 / IP 67 / IP 69K, see “Ordering code” (with appropriate mating connector and proper fitting and sealing)
Electrical connection		DIN EN 175301-803, 3-pin 2 P+E (standard) for other connectors, see “Ordering code”

3 Symbol

Function in P (inline model), **with external pilot-oil drain through Y**

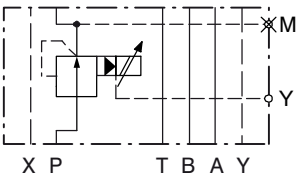

SDRPSA-5…-P-16…

4 Performance graphs

IMPORTANT!
Detailed performance data and other hydraulic characteristics can be found in the data sheet for the proportional pressure-reducing cartridge that is fitted (data sheet ref. no. 400-P-581701-E).

ATTENTION!
The performance figures in the data sheet for the cartridge valve refer just to the cartridge itself. Take into account the additional pressure drop in the body into which it is fitted.

5 Dimensions & sectional view

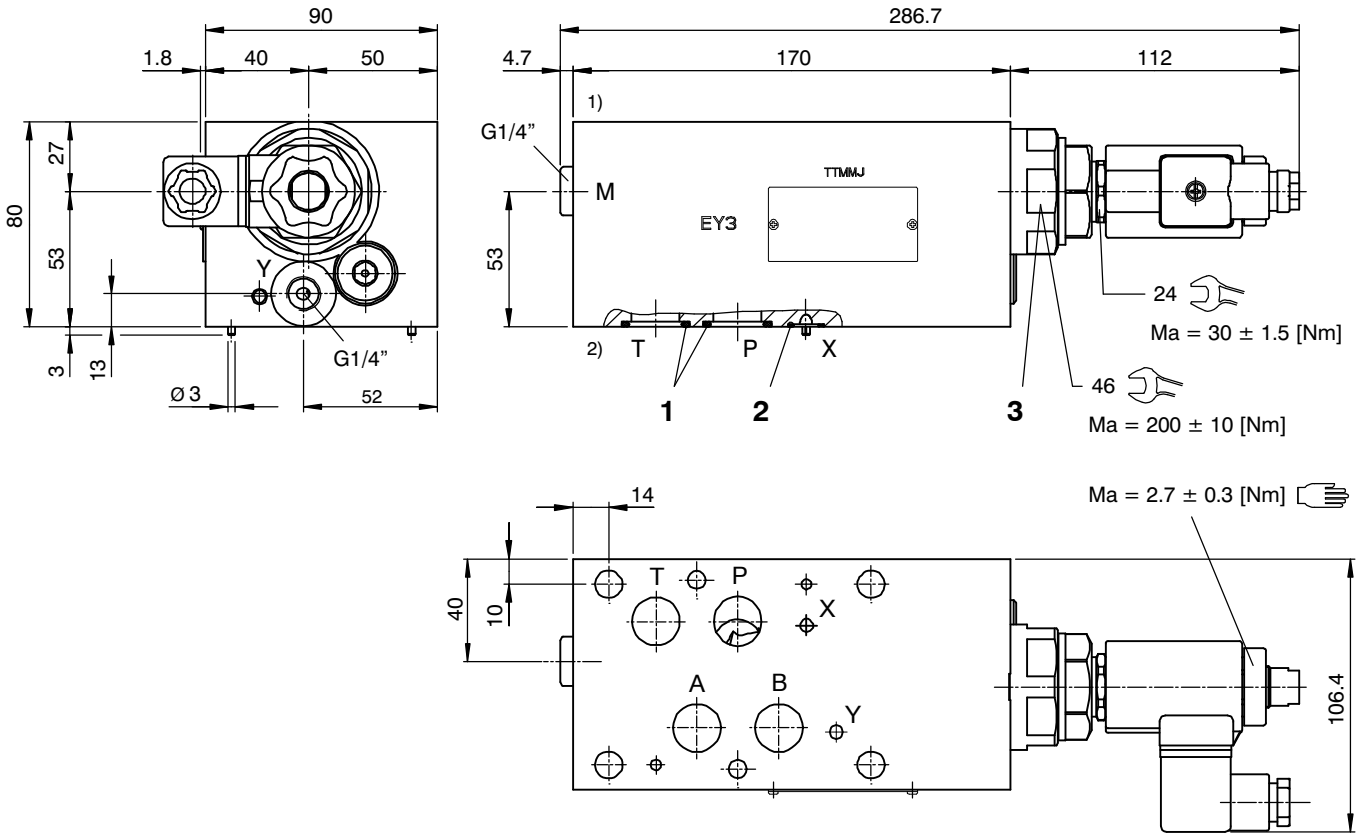

1) Valve side

2) Connections side (manifold side)

6 Installation information

IMPORTANT!
When installing the valve, make sure that the mating face (the manifold interface) aligns with the valve interface. Do not confuse the sandwich valve's manifold side and directional-valve side. No adjustments are necessary, since the cartridges are set in the factory.

ATTENTION!
Only qualified personnel with mechanical skills may carry out any maintenance work. Generally, the only work that should ever be undertaken is to check, and possibly replace, the seals. When changing seals, oil or grease the new seals thoroughly before fitting them.

ATTENTION!
To achieve the proportional pressure-reducing cartridge's maximum performance rating, fit the solenoid coil as shown (with the plug pins at the right). Use the specified tightening torque when fitting the cartridge.

NBR seal kit no. DS-382-N [3)]

Item	Qty.	Description
1	4	O-ring no. 118 ∅ 21.89 x 2.62 N90
2	2	O-ring no. 110 ∅ 9.19 x 2.62 N90
3	1	NBR seal kit no. DS-358-N for pressure-reducing cartridge DRPSB-5B…

IMPORTANT!

3) Seal kit with FKM (Viton) seals, no. DS-382-V

7 Ordering code

Ex. S | DRP | S | A - 5 | 35 - P - 16 | _ | 24 VDC | _

S	=	sandwich design
DRP	=	pressure-reducing cartridge, two stage
S	=	standard solenoid (proportional)
A ... Q	=	standard model - see relevant data sheets
Z ... R	=	special features - please consult BUCHER
5	=	pressure function 5 (external pilot-oil drain through Y)
35	=	pressure range …350 bar
25	=	pressure range …250 bar
16	=	pressure range …160 bar
10	=	pressure range …100 bar
P	=	function in P
16	=	ISO size 07 interface
(blank)	=	NBR (Nitrile) seals (**standard**)
V	=	FKM (Viton) seals (special seals - please contact BUCHER)
...	=	voltage e.g. **24** (24 V)
(blank)	=	DIN EN 175301-803 connection with mating plug (**standard, IP 65**)
M100	=	DIN EN 175301-803 connection without mating plug
C	=	Kostal plug connection (IP 65)
JT	=	Junior Timer radial plug connection (with protection diode, IP65)
IT	=	Junior Timer axial plug connection (with protection diode, IP65)
D	=	Deutsch plug connection 45° DT04-2P (IP67/69K)
DT	=	Deutsch plug connection 45° DT04-2P (with protection diode, IP67/69K)
S	=	AMP Superseal 1.5 (IP67) / Metri-Pack 150 (IP65) plug connection
F	=	flying leads (500 mm)

mating plug not supplied

8 Related data sheets

Reference	(Old no.)	Description
400-P-070101	(i-51)	Size 07 interface to ISO 4401-07-07
400-P-120110	(W-2.141)	Coils for screw-in cartridge valves
400-P-581701	(P-51.5 A2)	Proportional pressure-reducing cartridge, size 16, series DRPSB-5…
400-P-580101		Pilot pressure-relief cartridge, size 1, series DVSA-1L…

info.ch@bucherhydraulics.com www.bucherhydraulics.com

© 2021 by Bucher Hydraulics AG Frutigen, CH-3714 Frutigen
All rights reserved.
Data is provided for the purpose of product description only, and must not be construed as warranted characteristics in the legal sense. The information does not relieve users from the duty of conducting their own evaluations and tests. Because the products are subject to continual improvement, we reserve the right to amend the product specifications contained in this catalogue.

Classification:

BUCHER hydraulics

WWW.SUMY.IR

Stacking 3-Way Pressure Reducing Valve, size 2
Direct Acting
Series SDRA ...

- 250 bar, 25 l/min
- Direct acting, spool type
- 3-way function
- Low internal leakage
- Functional parts in side-mounted body
- 5 pressure ranges
- User-modifiable to hand knob or lokkable hand knob adjustment
- with ISO 4401-02-01 interface

1. Description

Series SDRA-4 units are stack mounting valves which provide a 3-way pressure reducing function in the P, A or B lines. The reduced pressure on the secondary side (P1) is held constant regardless of higher fluctuations in the primary side (P). If external forces cause the secondary pressure to rise above the valve setting, the 3-way reducing valve then begins to function as a secondary relief valve. The ∅ 3 mm location pin on the actuator face of the valve prevents incorrect mounting. Valves are shipped as standard with screw adjustment. Alternatively, they can be supplied with adjustment by hand knob, or lockable hand knob.

2. Symbols

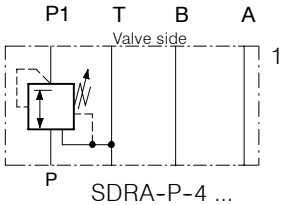

SDRA-P-4 ...

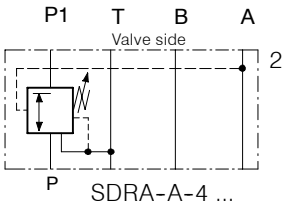

SDRA-A-4 ...

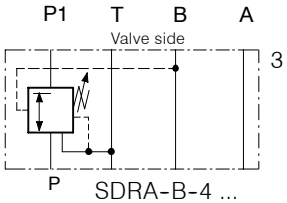

SDRA-B-4 ...

3. Main characteristics

Designation		3-way pressure reducing slice valve
Design		direct acting spool valve
Mounting method		stack mounting
Size		ISO 4401-02-01 interface
Weight	kg	0,88
Mounting attitude		unrestricted
Flow direction		see symbols
Operating pressure range	bar	... 250 in P, A and B; ... 160 in T
Adjustment ranges	bar	code 25 = ... 250 code 16 = ... 160 code 10 = ... 100 code 04 = ... 040 code 02 = ... 020
Flow rate, Q max.	l/min	25
Fluids		HL and HLP hydraulic oils to DIN 51 524; for other fluids, please consult BUCHER
Fluid temperature range	°C	-25 ... +80
Ambient temperature	°C	-25 ... +80

Viscosity range	mm^2/s (cSt)	10 ... 650, recommended 15 ... 250
Minimum fluid cleanliness level		18/14 to ISO 4406 / CETOP RP70H; 8 ... 9 to NAS 1638

4. Performance graphs

Measured with oil viscosity 33 mm^2/s (cSt)

SDRA-...-4-25
p-Q characteristic

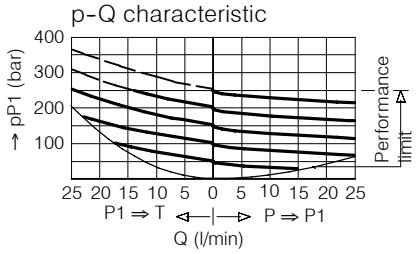

SDRA-...-4-16
p-Q characteristic

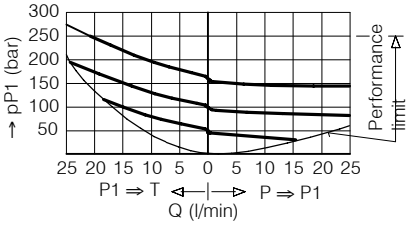

SDRA-...-4-10
p-Q characteristic

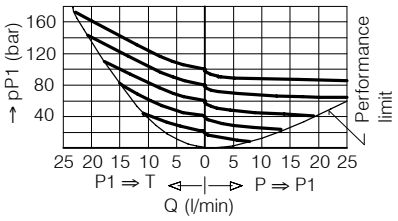

SDRA-...-4-04
p-Q characteristic

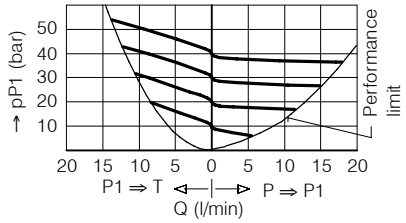

SDRA-..-4-02
p-Q characteristic

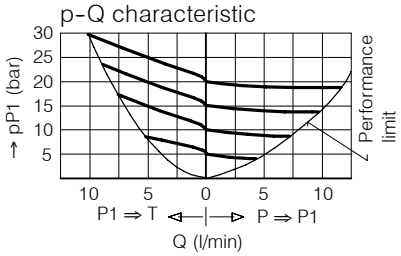

$\Delta p_{min.}$-Q characteristic

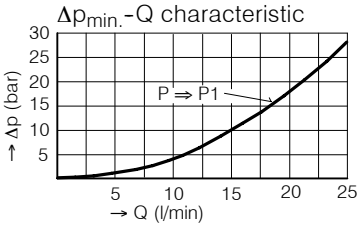

Leakage (guidelines)

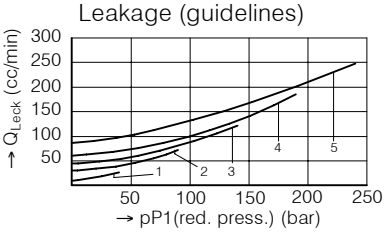

Curve 1: inlet pressure pP = 50 bar
Curve 2: inlet pressure pP = 100 bar
Curve 3: inlet pressure pP = 150 bar
Curve 4: inlet pressure pP = 200 bar
Curve 5: inlet pressure pP = 250 bar

Rate of pressure change when turning the adjusting screw:

SDRA-..-4-..25: 1 turn	≙	app. 45 bar
SDRA-..-4-..16: 1 turn	≙	app. 30 bar
SDRA-..-4-..10: 1 turn	≙	app. 20 bar
SDRA-..-4-..04: 1 turn	≙	app. 8 bar
SDRA-..-4-..02: 1 turn	≙	app. 3 bar

5. Dimensions

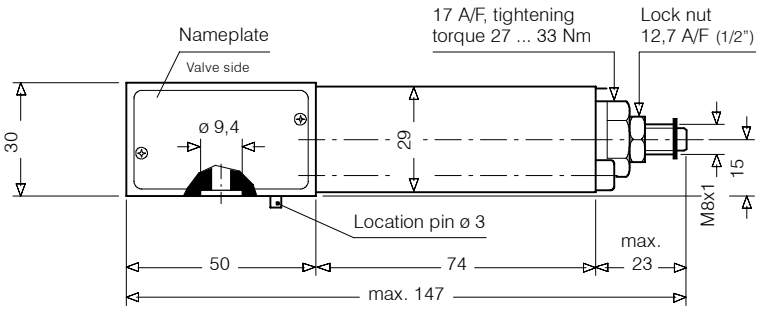

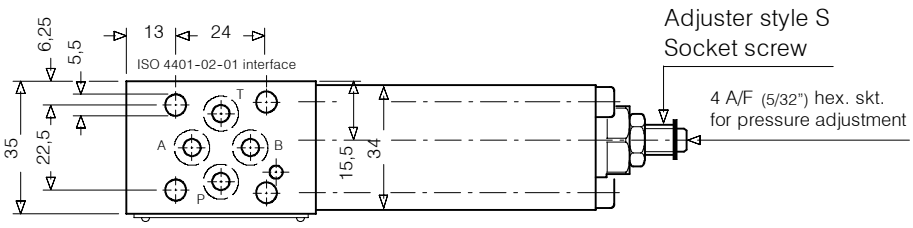

Adjuster styles / OPTIONAL
Conversion kit for styles S, H and Z5 - see related data sheets

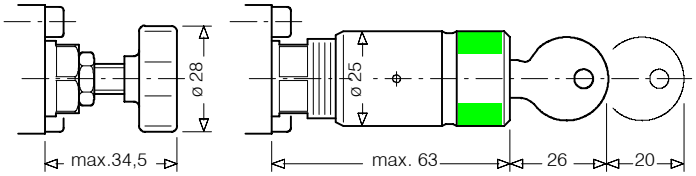

Adjuster style H
Hand knob

Adjuster style Z5, lockable hand type 2H.
Complies with Volkswagen factory specification BV 1.09

6. Schematic section

showing the relevant ports

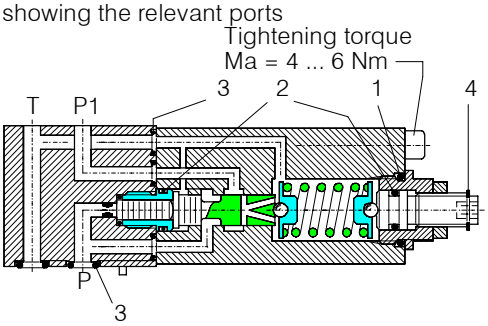

Seal kit no. DS-213, comprising:

Itm.	Qty.	Description	Size
1	1	O-ring no. 016	∅ 15,60 X 1,78 N90
2	2	O-ring no. 009	∅ 5,28 x 1,78 N90
3	7	O-ring no. 010	∅ 6,07 x 1,78 N90
4	1	Snap ring	Type SS ∅ 7

SDRA-A/-B/-P-4

7. Installation and servicing

All installation and servicing must be carried out with care, and by qualified personnel only. At installation, be sure to mount the valve the correct way up. Do not confuse the flat surface (directional valve side) and the surface with O-ring counter-bores (actuator side). When changing seals, the new seals should be thoroughly oiled or greased before fitting them to the valve. Use the correct tightening torques when fitting the threaded housing and cap screws.

8. Ordering code

Ex. S DR A - A - 4 - 25 - S - _ - 1

S = stacking valve
DR = pressure reducing function
A ... Q = standard model per current data sheet
Z ... R = special features, pls. consult BUCHER
P = function in P1
A = function in A
B = function in B
4 = ISO 4401-02-02 interface
25 = pressure range ... 250 bar
16 = pressure range ... 160 bar
10 = pressure range ... 100 bar
04 = pressure range ... 40 bar
02 = pressure range ... 20 bar

1 ... 9 = design number (omit when ordering)
(Blank) = Nitrile seals (standard)
V = Viton seals
For special seals, please consult BUCHER
S = with hex. skt. screw adjuster(standard)
H = with hand knob type H
Z = with lockable hand knob adjuster type Z5

9. Related data sheets

Old no.	New no.	
i - 17.00	400-P-015101-E	Procedure for changing the Adjuster Style
i - 30	400-P-030101-E	ISO 4401-02-01 interface

info.ch@bucherhydraulics.com www.bucherhydraulics.com

© 2015 by Bucher Hydraulics AG Frutigen, CH-3714 Frutigen
All rights reserved.
Data is provided for the purpose of product description only, and must not be construed as warranted characteristics in the legal sense. The information does not relieve users from the duty of conducting their own evaluations and tests. Because the products are subject to continual improvement, we reserve the right to amend the product specifications contained in this catalogue.

3-Way Pressure-Reducing Valve, ISO Size 03

Q_{max} = 60 l/min, p_{max} = 315 bar
Sandwich design, with manual adjustment, direct acting
Series SDDRA-7…

- With cartridge valve, type DDRA-7L…-10…
- Interface to ISO 4401-03-02
- Full-flow secondary pressure relief
- Function in the P or A line
- 5 pressure ranges available
- With pressure-gauge port
- Excellent stability over the whole pressure and flow range
- External cartridge parts with zinc-nickel plating

1 Description

Series SDDRA-7…-6… sandwich valves are high performance, manually adjusted 3-way pressure-reducing valves with a size 03 interface to ISO 4401-03-02. The main components of the valves are a sandwich body (stack-mounting body) and the screw-in cartridge (type DDRA-7L…-10…). The pressure-reducing cartridges are direct acting and designed on the sliding-spool principle. Two models are available, one with the function in P and the other with the function A and an integral bypass check valve. These valves reduce the pressure in the secondary side of P or A (for flow IN) respectively to the value set at the pressure adjustment. The 3-way pressure-reducing cartridges function as full-flow pressure-relief valves from port P → T or A → T respectively as soon as the reduced pressure rises above the valve pressure setting. A pressure-gauge port M (G1/4") is also provided in the secondary circuit. These sandwich valves are used to reduce the system pressure in mobile and industrial applications. All external parts of the cartridge are zinc-nickel plated according to DIN EN ISO 19 598 and are thus suitable for use in the harshest operating environments. The sandwich body is sealed at its manifold side (the connections side) by means of O-rings fitted in counterbores.

2 Technical data

General characteristics	Description, value, unit
Designation	3-way pressure-reducing valve
Design	sandwich design, with manual adjustment, direct acting
Mounting method	4 x ∅ 5.4 holes for M5 cap screws
Size	size 03 interface to ISO 4401-03-02 / DIN 24 340 A6
Weight	2.5…2.9 kg
Mounting attitude	unrestricted
Ambient temperature range	-25 °C … +80 °C
Surface corrosion protection	without

Hydraulic characteristics	Description, value, unit
Maximum operating pressure	315 bar
Flow range	…60 l/min
Nominal pressure ranges	…30 bar, …60 bar, …100 bar, …160 bar, …250 bar
Flow direction	see symbols

Hydraulic characteristics	Description, value, unit
Hydraulic fluid	HL and HLP mineral oil to DIN 51 524; for other fluids, please contact BUCHER
Hydraulic fluid temperature range	-25 °C … +80 °C
Viscosity range	10…650 mm^2/s (cSt), recommended 15...250 mm^2/s (cSt)
Minimum fluid cleanliness Cleanliness class to ISO 4406 : 1999	class 20/18/15

3 Symbol

Function in P

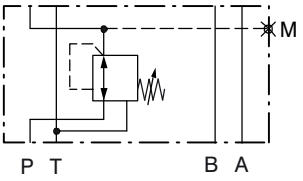

SDDRA-7…-P-6…

Function in A (for flow IN)

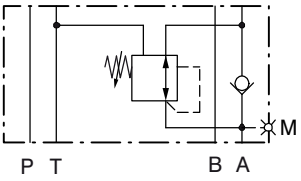

SDDRA-7…-AZR-6…

4 Dimensions & sectional view

4.1 Function in P

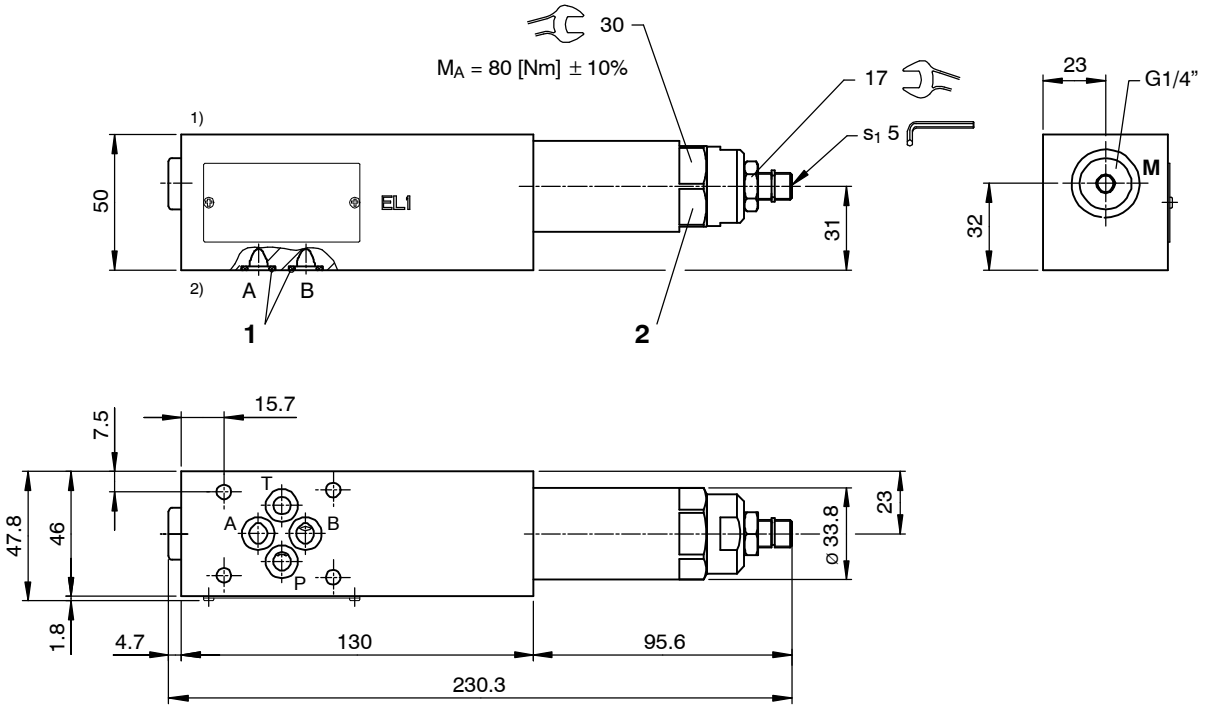

1) Valve side

2) Connections side (manifold side)

M Pressure-gauge port (with G 1/4" threaded plug, ED VSTI)

4.2 Function in A (for flow IN), with bypass check valve

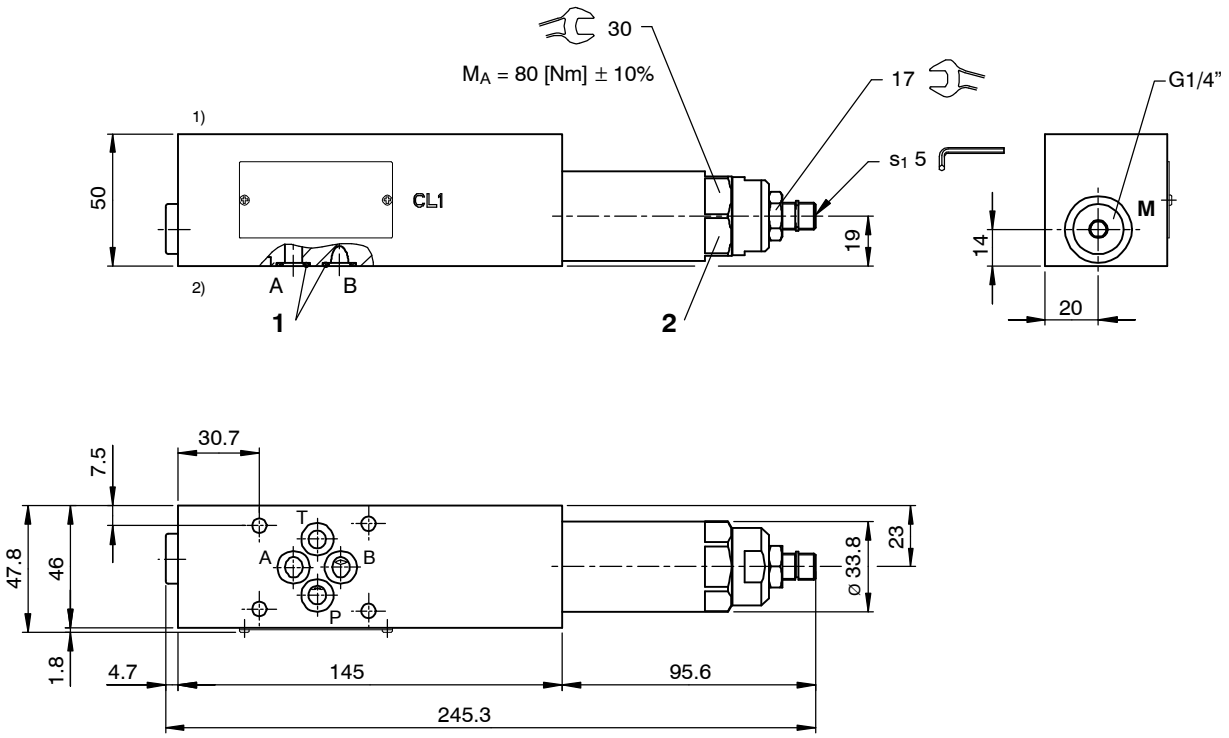

1) Valve side

2) Connections side (manifold side)

M Pressure-gauge port (with G 1/4" threaded plug, ED VSTI)

5 Installation information

IMPORTANT!
When installing the valve, make sure that the mating face (the manifold interface) aligns with the valve interface. Do not confuse the sandwich valve's manifold side and directional-valve side. Set the required pressure with the adjusting screw (s_1). After you have set the valve, lock the adjusting screw with the lock nut.

ATTENTION!
Only qualified personnel with mechanical skills may carry out any maintenance work. Generally, the only work that should ever be undertaken is to check, and possibly replace, the seals. When changing seals, oil or grease the new seals thoroughly before fitting them.

Seal kit NBR no. DS-401-N [3)]

Item	Qty.	Description
1	4	O-ring no. 012 ∅ 9,25 x 1,78 N90
2	1	Seal kit NBR no. DS-324-N for pressure-reducing cartridge DDRA-7L…

IMPORTANT!
3) Seal kit with FKM (Viton) seals, no. DS-401-V

6 Performance graphs

IMPORTANT!
Detailed performance data and other hydraulic characteristics can be found in the data sheet for the 3-way pressure-reducing cartridge that is fitted (data sheet ref. no. 400-P-260701-E).

ATTENTION!
The performance figures in the data sheet for the cartridge valve refer just to the cartridge itself. Take into account the additional pressure drop in the body into which it is fitted.

7 Ordering code

Ex. S | D | DR | A - 7 | L - P - 6 - 25 - S | _

S	=	sandwich design
D	=	direct acting
DR	=	pressure-reducing function
A ... Q	=	standard model - see relevant data sheets
Z ... R	=	special features - please consult BUCHER
7	=	pressure function 7 (3-way pressure function)
L	=	cavity type DL
P	=	function in P
AZR	=	function in A for flow IN, with bypass check valve
6	=	ISO size 03 interface
25	=	pressure range …250 bar
16	=	pressure range …160 bar
10	=	pressure range …100 bar
06	=	pressure range … 60 bar
03	=	pressure range … 30 bar
S	=	screw adjuster
(blank)	=	NBR (Nitrile) seals (**standard**)
V	=	FKM (Viton) seals (special seals - please contact BUCHER)

8 Related data sheets

Reference	(Old no.)	Description
400-P-030501	(i-31)	Size 03 interface to ISO 4401-03-02
400-P-260701		3-way pressure-reducing valve, size 10, series DDRA-7L…-10…

info.ch@bucherhydraulics.com www.bucherhydraulics.com

© 2021 by Bucher Hydraulics AG Frutigen, CH-3714 Frutigen
All rights reserved.
Data is provided for the purpose of product description only, and must not be construed as warranted characteristics in the legal sense. The information does not relieve users from the duty of conducting their own evaluations and tests. Because the products are subject to continual improvement, we reserve the right to amend the product specifications contained in this catalogue.

Classification: 430.305.305.330.315.355

3-Way Pressure-Reducing Valve, ISO Size 05

Q_{max} = 70 l/min, p_{max} = 315 bar
Sandwich design, with manual adjustment, direct acting
Series SDDRA-7…

- With cartridge valve, type DDRA-7L…-10…
- Interface to ISO 4401-05-04
- Full-flow secondary pressure relief
- Function in the P or A line
- 5 pressure ranges available
- With pressure-gauge port
- Excellent stability over the whole pressure and flow range
- External cartridge parts with zinc-nickel plating

1 Description

Series SDDRA-7…-10… sandwich valves are high performance, manually adjusted 3-way pressure-reducing valves with a size 05 interface to ISO 4401-05-04. The main components of the valves are a sandwich body (stack-mounting body) and the screw-in cartridge (type DDRA-7L…-10…). The pressure-reducing cartridges are direct acting and designed on the sliding-spool principle. Two models are available, one with the function in P and the other with the function A and an integral bypass check valve. These valves reduce the pressure in the secondary side of P or A (for flow IN) respectively to the value set at the pressure adjustment. The 3-way pressure-reducing cartridges function as full-flow pressure-relief valves from port P → T or A → T respectively as soon as the reduced pressure rises above the valve pressure setting. A pressure-gauge port M (G1/4") is also provided in the secondary circuit. These sandwich valves are used to reduce the system pressure in mobile and industrial applications. All external parts of the cartridge are zinc-nickel plated according to DIN EN ISO 19 598 and are thus suitable for use in the harshest operating environments. The sandwich body is sealed at its manifold side (the connections side) by means of O-rings fitted in counterbores.

2 Technical data

General characteristics	Description, value, unit
Designation	3-way pressure-reducing valve
Design	sandwich design, with manual adjustment, direct acting
Mounting method	4 x ∅ 6.5 holes for M6 cap screws
Size	size 05 interface to ISO 4401-05-04 / DIN 24 340 A10
Weight	3.2…3.5 kg
Mounting attitude	unrestricted
Ambient temperature range	-25 °C … +80 °C
Surface corrosion protection	without

Hydraulic characteristics	Description, value, unit
Maximum operating pressure	315 bar
Flow range	…70 l/min
Nominal pressure ranges	…30 bar, …60 bar, …100 bar, …160 bar, …250 bar
Flow direction	see symbols

Hydraulic characteristics	Description, value, unit
Hydraulic fluid	HL and HLP mineral oil to DIN 51 524; for other fluids, please contact BUCHER
Hydraulic fluid temperature range	-25 °C … +80 °C
Viscosity range	10…650 mm^2/s (cSt), recommended 15...250 mm^2/s (cSt)
Minimum fluid cleanliness Cleanliness class to ISO 4406 : 1999	class 20/18/15

3 Symbol

Function in P

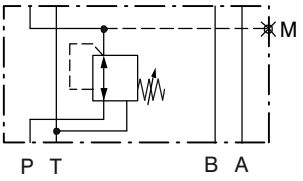

SDDRA-7…-P-10…

Function in A (for flow IN)

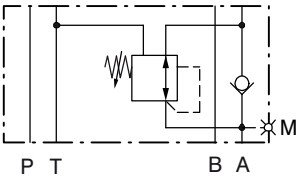

SDDRA-7…-AZR-10…

4 Dimensions & sectional view

4.1 Function in P

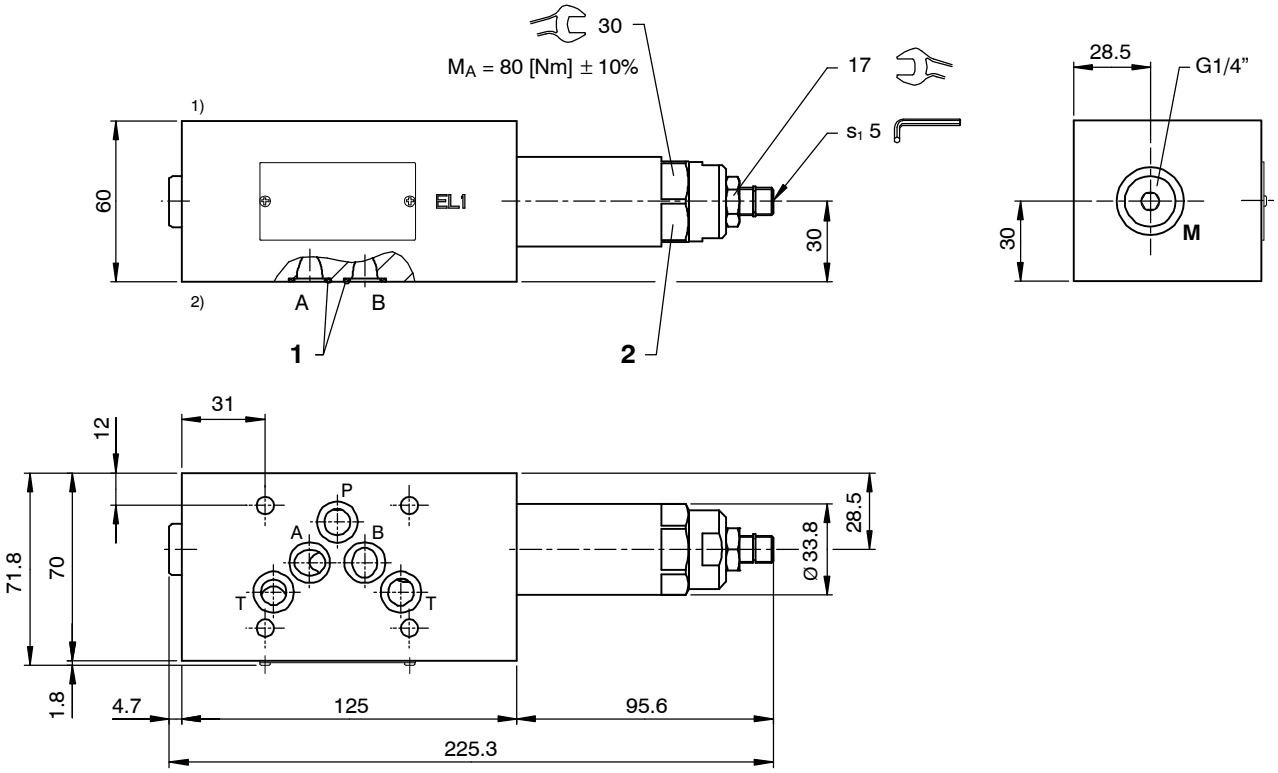

1) Valve side

2) Connections side (manifold side)

M Pressure-gauge port (with G 1/4" threaded plug, ED VSTI)

4.2 Function in A (for flow IN), with bypass check valve

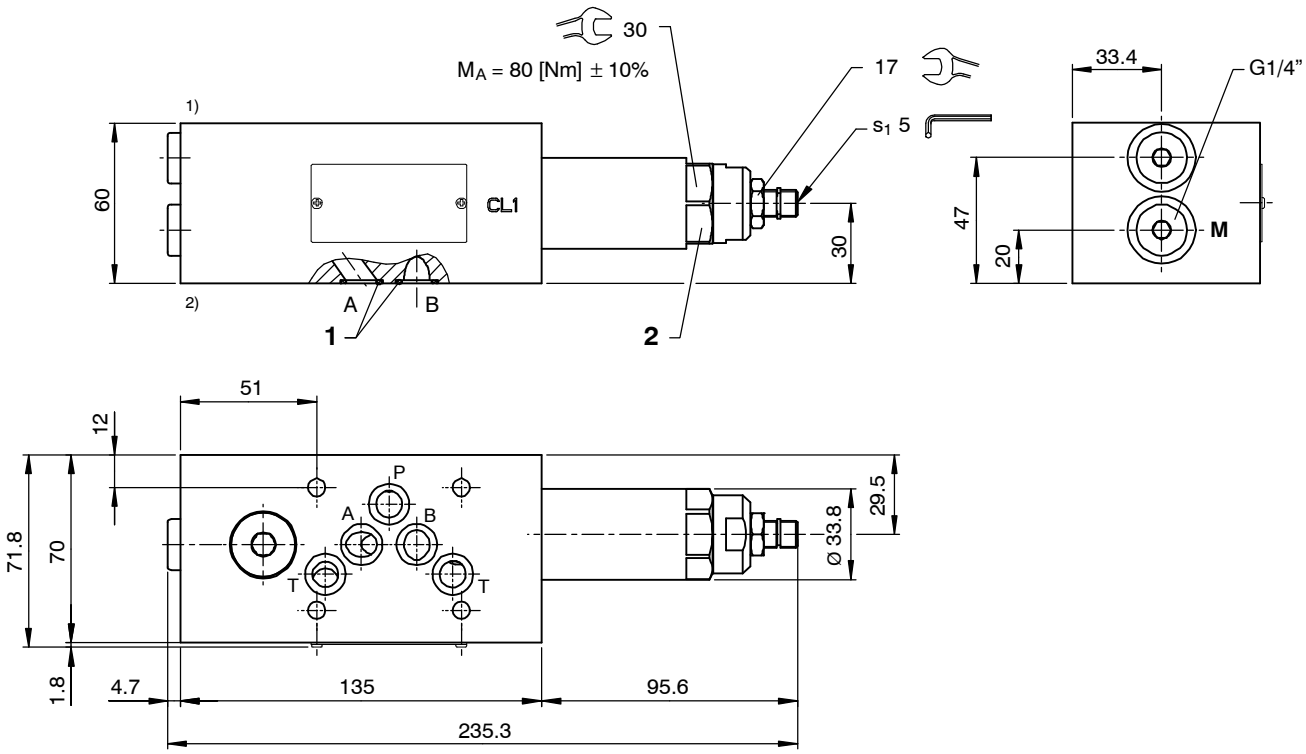

1) Valve side

2) Connections side (manifold side)

M Pressure-gauge port (with G 1/4" threaded plug, ED VSTI)

5 Installation information

IMPORTANT!
When installing the valve, make sure that the mating face (the manifold interface) aligns with the valve interface. Do not confuse the sandwich valve's manifold side and directional-valve side. Set the required pressure with the adjusting screw (s_1). After you have set the valve, lock the adjusting screw with the lock nut.

ATTENTION!
Only qualified personnel with mechanical skills may carry out any maintenance work. Generally, the only work that should ever be undertaken is to check, and possibly replace, the seals. When changing seals, oil or grease the new seals thoroughly before fitting them.

Seal kit NBR no. DS-402-N 3)

Item	Qty.	Description
1	5	O-ring no. 014 ∅ 12,42 x 1,78 N90
2	1	Seal kit NBR no. DS-324-N for pressure-reducing cartridge DDRA-7L…

IMPORTANT!
3) Seal kit with FKM (Viton) seals, no. DS-402-V

6 Performance graphs

IMPORTANT!
Detailed performance data and other hydraulic characteristics can be found in the data sheet for the 3-way pressure-reducing cartridge that is fitted (data sheet ref. no. 400-P-260701-E).

ATTENTION!
The performance figures in the data sheet for the cartridge valve refer just to the cartridge itself. Take into account the additional pressure drop in the body into which it is fitted.

7 Ordering code

Ex. S D DR A - 7 L - P - 10 - 25 - S _

S	=	sandwich design
D	=	direct acting
DR	=	pressure-reducing function
A ... Q	=	standard model - see relevant data sheets
Z ... R	=	special features - please consult BUCHER
7	=	pressure function 7 (3-way pressure function)
L	=	cavity type DL
P	=	function in P
AZR	=	function in A for flow IN, with bypass check valve
10	=	ISO size 05 interface
25	=	pressure range …250 bar
16	=	pressure range …160 bar
10	=	pressure range …100 bar
06	=	pressure range … 60 bar
03	=	pressure range … 30 bar
S	=	screw adjuster
(blank)	=	NBR (Nitrile) seals (**standard**)
V	=	FKM (Viton) seals (special seals - please contact BUCHER)

8 Related data sheets

Reference	(Old no.)	Description
400-P-050101	(i-41)	Size 05 interface to ISO 4401-05-04
400-P-260701		3-way pressure-reducing valve, size 10, series DDRA-7L…-10…

info.ch@bucherhydraulics.com www.bucherhydraulics.com

© 2021 by Bucher Hydraulics AG Frutigen, CH-3714 Frutigen
All rights reserved.
Data is provided for the purpose of product description only, and must not be construed as warranted characteristics in the legal sense. The information does not relieve users from the duty of conducting their own evaluations and tests. Because the products are subject to continual improvement, we reserve the right to amend the product specifications contained in this catalogue.

Classification: 430.305.305.330.320.355

Prop. 3-Way Pressure-Reducing Valve, ISO Size 03

Q_{max} = 60 l/min, p_{max} = 350 bar
Sandwich design, electrically operated, seated pilot stage
Series SDRVSA-7…

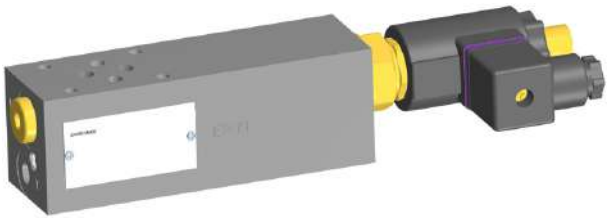

- With cartridge valve, type DRVSA-7P…-10…
- Interface to ISO 4401-03-02
- Full-flow secondary pressure relief
- Function in the P or A line
- External pilot-oil drain
- 4 pressure ranges available
- With pressure-gauge port
- Excellent stability over the whole pressure and flow range
- External cartridge parts are zinc plated and chromited (CrVI-free)
- The slip-on coil can be rotated, and it can be replaced without opening the hydraulic envelope
- Various plug-connector systems and voltages are available

1 Description

Series SDRVSA-7…-6… sandwich valves are high performance, electrically operated proportional 3-way pressure-reducing valves with a size 03 interface to ISO 4401-03-02. The main components of the valves are a sandwich body (stack-mounting body) and the screw-in cartridge (type DRVSA-7P…-10…). The pressure-reducing cartridges have a seated pilot stage, and the main stage is designed on the sliding-spool principle. Two models are available, one with the function in P and the other with the function A and an integral bypass check valve. Both models are provided with external pilot-oil drain through Y. These valves reduce the pressure in the secondary side of P or A (for flow IN) respectively to a level that is proportional to the solenoid current, which depends on the demand signal to the electronics. These 3-way pressure-reducing cartridges function as full-flow pressure-relief valves from port P → T or A → T respectively as soon as the reduced pressure rises above the valve pressure setting. Thanks to the external pilot-oil drain, the reduced pressure is unaffected by any pressure fluctuations. A pressure-gauge port M (G1/4") is also provided in the secondary circuit. These sandwich valves are used to reduce the system pressure in mobile and industrial applications. All external parts of the cartridge are zinc-nickel plated according to DIN EN ISO 19 598 and are thus suitable for use in the harshest operating environments. The slip-on coils can be replaced without opening the hydraulic envelope and can be positioned at any angle through 360°. The sandwich body is sealed at its manifold side (the connections side) by means of O-rings fitted in counterbores.

2 Technical data

General characteristics	Description, value, unit
Designation	proportional 3-way pressure-reducing valve
Design	sandwich design, electrically operated, seated pilot stage
Mounting method	4 x ∅ 5.4 holes for M5 cap screws
Size	size 03 interface to ISO 4401-03-02 / DIN 24 340 A6
Weight	2.8…3.2 kg
Mounting attitude	unrestricted
Ambient temperature range	-25 °C … +50 °C
Surface corrosion protection	without

WWW.SUMY.IR

Hydraulic characteristics		Description, value, unit
Maximum operating pressure	- ports P, A, B, T - port Y	350 bar 250 bar [1)]
Flow range		…60 l/min
Nominal pressure ranges		…100 bar, …160 bar, …250 bar, …350 bar
Pilot-oil consumption		0.3 … 0.5 l/min
Flow direction		see symbols
Hydraulic fluid		HL and HLP mineral oil to DIN 51 524; for other fluids, please contact BUCHER
Hydraulic fluid temperature range		-25 °C … +70 °C
Viscosity range		15…380 mm^2/s (cSt), recommended 20...130 mm^2/s (cSt)
Minimum fluid cleanliness Cleanliness class to ISO 4406 : 1999		class 18/16/13

ATTENTION!
[1)] To prevent any pressure surges, port Y must be routed to tank with the least possible back-pressure.

Electrical characteristics		Description, value, unit
Supply voltage		12 V DC, 24 V DC
Supply voltage tolerance		± 10 %
Control current		12 V = 0…1400 mA, 24 V = 0…750 mA
Power consumption at max. control current		max. 19 W
Coil resistance R	- cold value at 20 °C - max. warm value	12 V = 5.8 Ω / 24 V = 21 Ω 12 V = 8.6 Ω / 24 V = 32 Ω
Recommended PWM frequency (dither)		200 Hz
Hysteresis with PWM		2…4 % I_N
Reversal error with PWM		1…3 % I_N
Sensitivity with PWM		≤ 1 % I_N
Reproducibility with PWM		< 2 % p_N
Switching time		*Pressure-reducing function*: 20 … 29 ms (Solenoid ON) 12 … 26 ms (Soleboid OFF) *Pressure-relief function:* 24 … 62 ms (Solenoid ON) 15 … 45 ms (Solenoid OFF) The switching times are strongly influenced by flow rate, pressure, viscosity and the dwell period under pressure.
Relative duty cycle		100 %
Protection class to ISO 20 653 / EN 60 529		IP 65 / IP 67 / IP 69K, see “Ordering code” (with appropriate mating connector and proper fitting and sealing)
Electrical connection		DIN EN 175301-803, 3-pin 2 P+E (standard) for other connectors, see “Ordering code”

3 Symbol

Function in P,
with external pilot-oil drain through Y

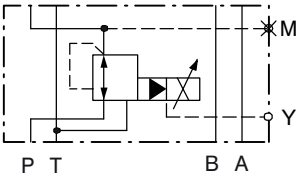

SDRVSA-7…-P-1…

Function in A (for flow IN),
with external pilot-oil drain through Y

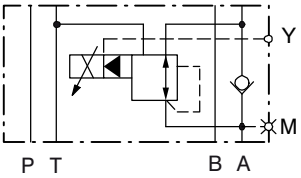

SDRVSA-7…-AZR-1…

4 Performance graphs

IMPORTANT!
Detailed performance data and other hydraulic characteristics can be found in the data sheet for the prop. 3-way pressure-reducing cartridge that is fitted (data sheet ref. no. 400-P-591101-E).

ATTENTION!
The performance figures in the data sheet for the cartridge valve refer just to the cartridge itself. Take into account the additional pressure drop in the body into which it is fitted.

5 Dimensions & sectional view

5.1 Function in P

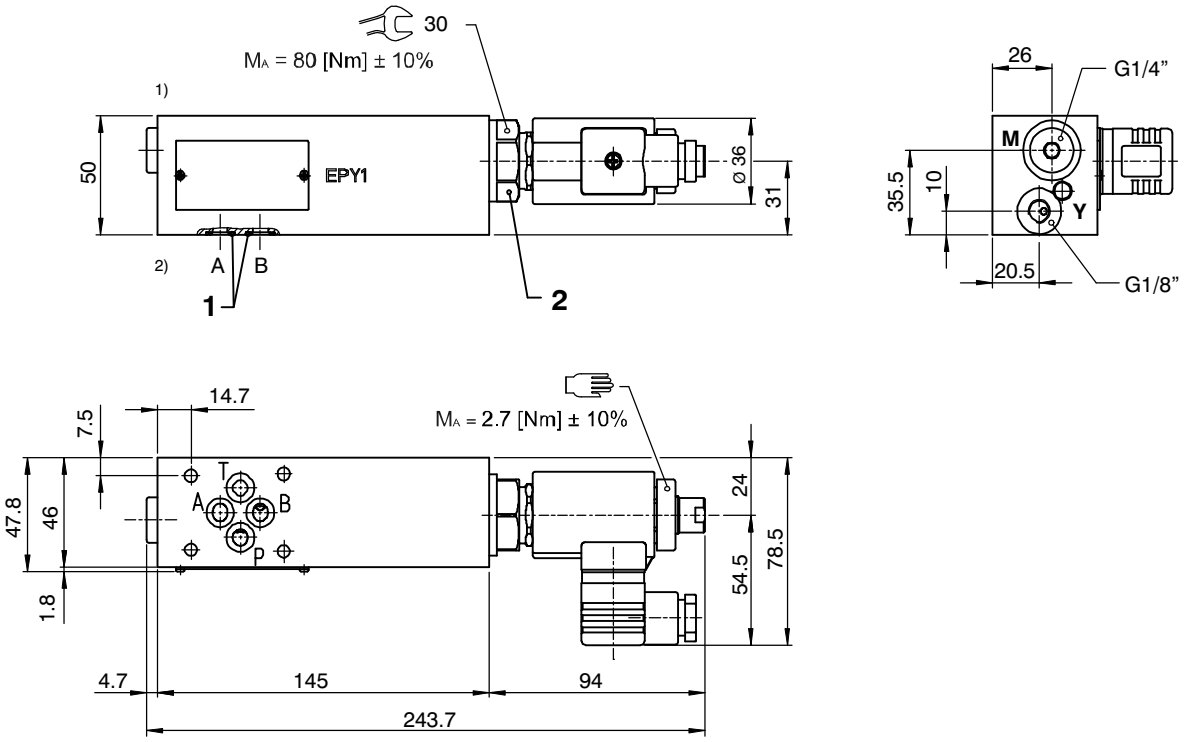

1) Valve side
2) Connections side (manifold side)
Y Pilot-oil drain (to tank without back-pressure)
M Pressure-gauge port (with G 1/4" threaded plug, ED VSTI)

5.2 Function in A (for flow IN), with bypass check valve

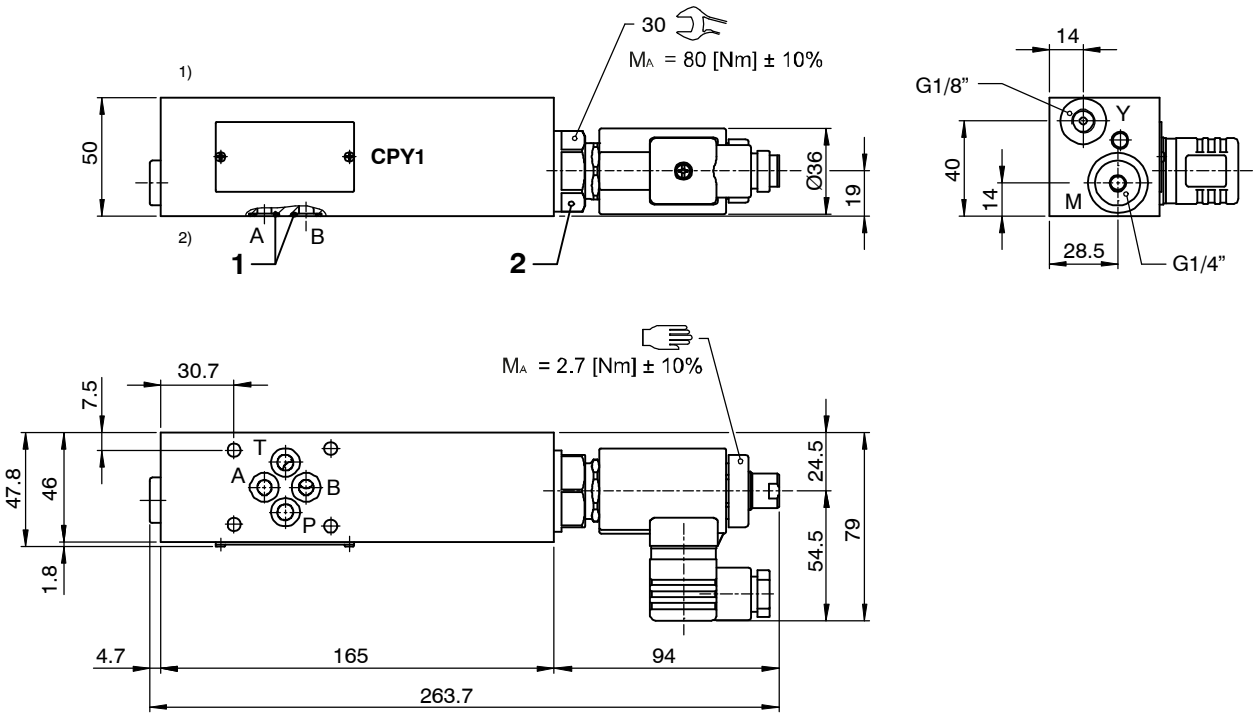

1) Valve side

2) Connections side (manifold side)

Y Pilot-oil drain (to tank without back-pressure)

M Pressure-gauge port (with G 1/4" threaded plug, ED VSTI)

6 Installation information

IMPORTANT!
When installing the valve, make sure that the mating face (the manifold interface) aligns with the valve interface. Do not confuse the sandwich valve's manifold side and directional-valve side. No adjustments are necessary, since the cartridges are set in the factory.

ATTENTION!
Only qualified personnel with mechanical skills may carry out any maintenance work. Generally, the only work that should ever be undertaken is to check, and possibly replace, the seals. When changing seals, oil or grease the new seals thoroughly before fitting them.

ATTENTION!
To achieve the proportional 3-way pressure-reducing cartridge's maximum performance rating, fit the solenoid coil as shown (with the plug pins at the right). Use the specified tightening torque when fitting the cartridge.

Seal kit NBR no. DS-396-N 3)

Item	Qty.	Description
1	4	O-ring no. 012 ∅ 9,25 x 1,78 N90
2	1	NBR seal kit no. DS-394-N for pressure-reducing cartridge DRVSA-7P…

IMPORTANT!

3) Seal kit with FKM (Viton) seals, no. DS-396-V

7 Ordering code

Ex. S DRV S A - 7 35 - P - 6 _ 24 VDC _

S	=	sandwich design
DRV	=	pressure-reducing cartridge, two stage
S	=	standard solenoid (proportional)
A ... Q	=	standard model - see relevant data sheets
Z ... R	=	special features - please consult BUCHER
7	=	pressure function 7, 3-way (external pilot-oil drain through Y)
35	=	pressure range …350 bar
25	=	pressure range …250 bar
16	=	pressure range …160 bar
10	=	pressure range …100 bar
P	=	function in P
AZR	=	function in A for flow IN, with bypass check valve
6	=	ISO size 03 interface
(blank)	=	NBR (Nitrile) seals (**standard**)
V	=	FKM (Viton) seals (special seals - please contact BUCHER)
...	=	voltage e.g. **24** (24 V)
(blank)	=	DIN EN 175301-803 connection with mating plug (**standard, IP 65**)
M100	=	DIN EN 175301-803 connection without mating plug
C	=	Kostal plug connection (IP 65)
JT	=	Junior Timer radial plug connection (with protection diode, IP65)
IT	=	Junior Timer axial plug connection (with protection diode, IP65)
D	=	Deutsch plug connection 45° DT04-2P (IP67/69K)
DT	=	Deutsch plug connection 45° DT04-2P (with protection diode, IP67/69K)
S	=	AMP Superseal 1.5 (IP67) / Metri-Pack 150 (IP65) plug connection
F	=	flying leads (500 mm)

mating plug not supplied

8 Related data sheets

Reference	(Old no.)	Description
400-P-030501	(i-31)	Size 03 interface to ISO 4401-03-02
400-P-120110	(W-2.141)	Coils for screw-in cartridge valves
400-P-591101		Prop. 3-way pressure-reducing valve, size 10, series DRVSA-7P…-10…
400-P-510101		Amplifier unit for proportional valves (1-channel) PBS - 3A

info.ch@bucherhydraulics.com www.bucherhydraulics.com

© 2021 by Bucher Hydraulics AG Frutigen, CH-3714 Frutigen
All rights reserved.
Data is provided for the purpose of product description only, and must not be construed as warranted characteristics in the legal sense. The information does not relieve users from the duty of conducting their own evaluations and tests. Because the products are subject to continual improvement, we reserve the right to amend the product specifications contained in this catalogue.

Classification: 430.305.305.330.315.310

Prop. 3-Way Pressure-Reducing Valve, ISO Size 05

Q_{max} = 120 l/min, p_{max} = 350 bar
Sandwich design, electrically operated, seated pilot stage
Series SDRVSA-7…

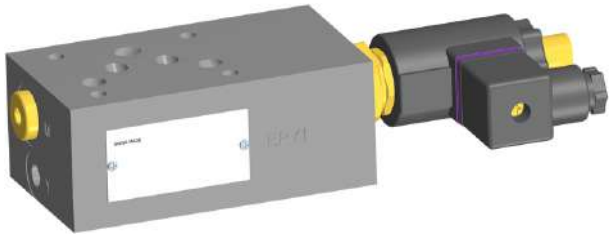

- With cartridge valve, type DRVSA-7P…-10…
- Interface to ISO 4401-05-04
- Full-flow secondary pressure relief
- Function in the P or A line
- External pilot-oil drain
- 4 pressure ranges available
- With pressure-gauge port
- Excellent stability over the whole pressure and flow range
- External cartridge parts are zinc plated and chromited (CrVI-free)
- The slip-on coil can be rotated, and it can be replaced without opening the hydraulic envelope
- Various plug-connector systems and voltages are available

1 Description

Series SDRVSA-7…-10… sandwich valves are high performance, electrically operated proportional 3-way pressure-reducing valves with a size 05 interface to ISO 4401-05-04. The main components of the valves are a sandwich body (stack-mounting body) and the screw-in cartridge (type DRVSA-7P…-10…). The pressure-reducing cartridges have a seated pilot stage, and the main stage is designed on the sliding-spool principle. Two models are available, one with the function in P and the other with the function A and an integral bypass check valve. Both models are provided with external pilot-oil drain through Y. These valves reduce the pressure in the secondary side of P or A (for flow IN) respectively to a level that is proportional to the solenoid current, which depends on the demand signal to the electronics. These 3-way pressure-reducing cartridges function as full-flow pressure-relief valves from port P → T or A → T respectively as soon as the reduced pressure rises above the valve pressure setting. Thanks to the external pilot-oil drain, the reduced pressure is unaffected by any pressure fluctuations. A pressure-gauge port M (G1/4") is also provided in the secondary circuit. These sandwich valves are used to reduce the system pressure in mobile and industrial applications. All external parts of the cartridge are zinc-nickel plated according to DIN EN ISO 19 598 and are thus suitable for use in the harshest operating environments. The slip-on coils can be replaced without opening the hydraulic envelope and can be positioned at any angle through 360°. The sandwich body is sealed at its manifold side (the connections side) by means of O-rings fitted in counterbores.

2 Technical data

General characteristics	Description, value, unit
Designation	proportional 3-way pressure-reducing valve
Design	sandwich design, electrically operated, seated pilot stage
Mounting method	4 x ∅ 6.5 holes for M6 cap screws
Size	size 05 interface to ISO 4401-05-04 / DIN 24 340 A10
Weight	3.5…3.8 kg
Mounting attitude	unrestricted
Ambient temperature range	-25 °C … +50 °C
Surface corrosion protection	without

WWW.SUMY.IR

Hydraulic characteristics		Description, value, unit
Maximum operating pressure	- ports P, A, B, T - port Y	350 bar 250 bar [1)]
Flow range		…120 l/min
Nominal pressure ranges		…100 bar, …160 bar, …250 bar, …350 bar
Pilot-oil consumption		0.3 … 0.5 l/min
Flow direction		see symbols
Hydraulic fluid		HL and HLP mineral oil to DIN 51 524; for other fluids, please contact BUCHER
Hydraulic fluid temperature range		-25 °C … +70 °C
Viscosity range		15…380 mm^2/s (cSt), recommended 20...130 mm^2/s (cSt)
Minimum fluid cleanliness Cleanliness class to ISO 4406 : 1999		class 18/16/13

ATTENTION!
[1)] To prevent any pressure surges, port Y must be routed to tank with the least possible back-pressure.

Electrical characteristics		Description, value, unit
Supply voltage		12 V DC, 24 V DC
Supply voltage tolerance		± 10 %
Control current		12 V = 0…1400 mA, 24 V = 0…750 mA
Power consumption at max. control current		max. 19 W
Coil resistance R	- cold value at 20 °C - max. warm value	12 V = 5.8 Ω / 24 V = 21 Ω 12 V = 8.6 Ω / 24 V = 32 Ω
Recommended PWM frequency (dither)		200 Hz
Hysteresis with PWM		2…4 % I_N
Reversal error with PWM		1…3 % I_N
Sensitivity with PWM		≤ 1 % I_N
Reproducibility with PWM		< 2 % p_N
Switching time		*Pressure-reducing function*: 20 … 29 ms (Solenoid ON) 12 … 26 ms (Soleboid OFF) *Pressure-relief function:* 24 … 62 ms (Solenoid ON) 15 … 45 ms (Solenoid OFF) The switching times are strongly influenced by flow rate, pressure, viscosity and the dwell period under pressure.
Relative duty cycle		100 %
Protection class to ISO 20 653 / EN 60 529		IP 65 / IP 67 / IP 69K, see “Ordering code” (with appropriate mating connector and proper fitting and sealing)
Electrical connection		DIN EN 175301-803, 3-pin 2 P+E (standard) for other connectors, see “Ordering code”

3 Symbol

Function in P,
with external pilot-oil drain through Y

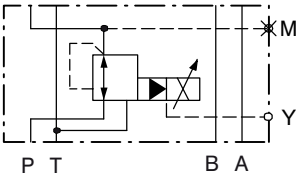

SDRVSA-7…-P-1…

Function in A (for flow IN),
with external pilot-oil drain through Y

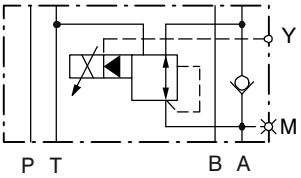

SDRVSA-7…-AZR-1…

4 Performance graphs

IMPORTANT!
Detailed performance data and other hydraulic characteristics can be found in the data sheet for the prop. 3-way pressure-reducing cartridge that is fitted (data sheet ref. no. 400-P-591101-E).

ATTENTION!
The performance figures in the data sheet for the cartridge valve refer just to the cartridge itself. Take into account the additional pressure drop in the body into which it is fitted.

5 Dimensions & sectional view

5.1 Function in P

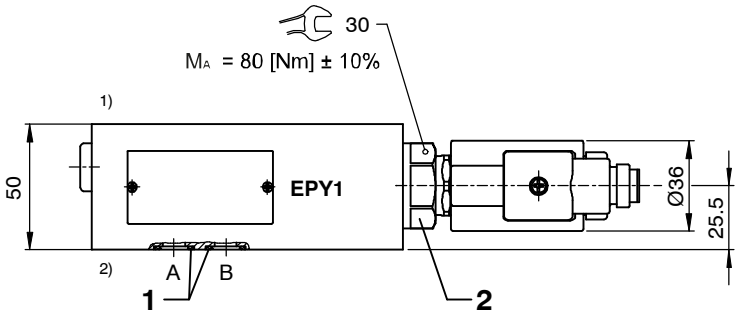

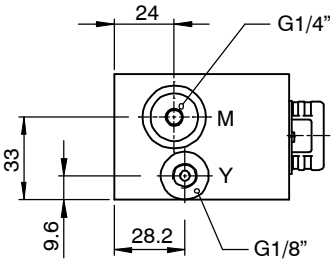

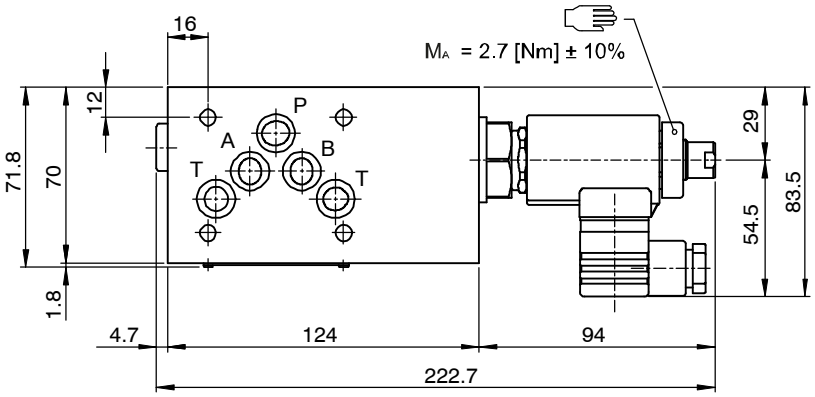

1) Valve side
2) Connections side (manifold side)
Y Pilot-oil drain (to tank without back-pressure)
M Pressure-gauge port (with G 1/4" threaded plug, ED VSTI)

5.2 Function in A (for flow IN), with bypass check valve

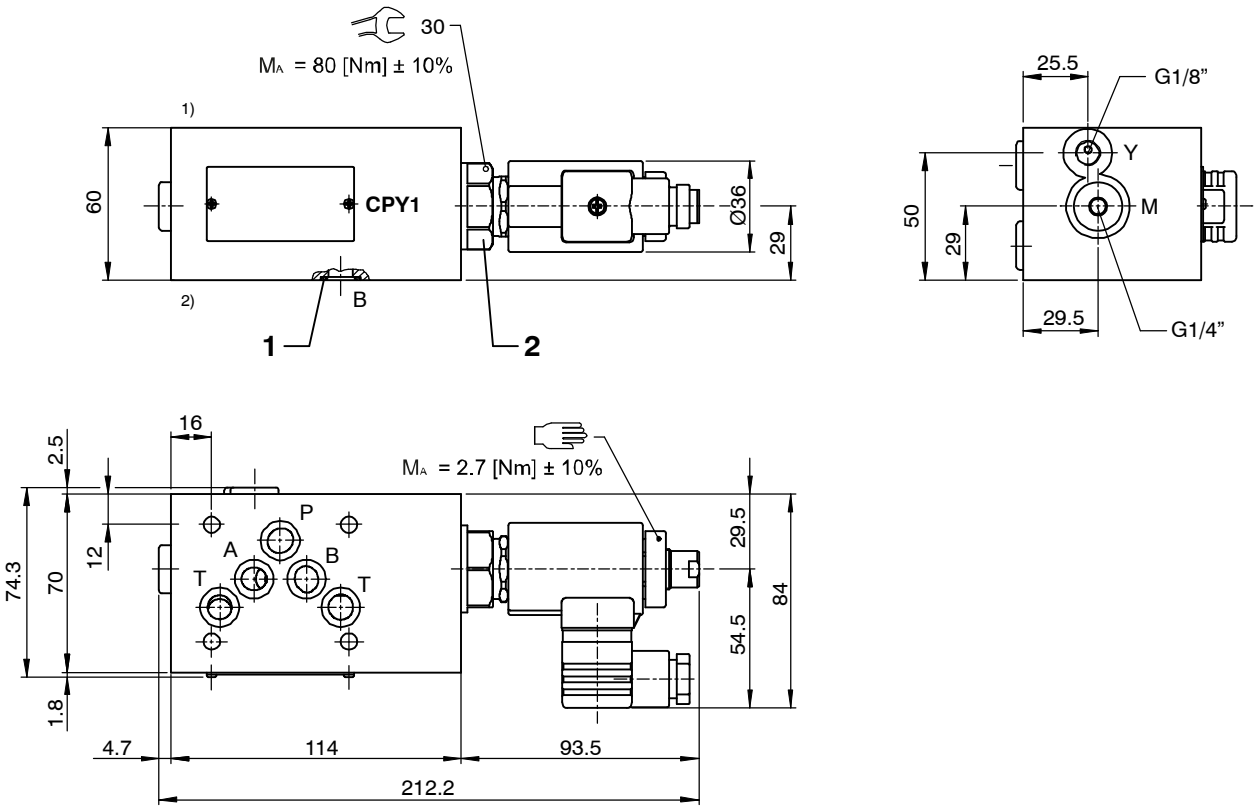

1) Valve side

2) Connections side (manifold side)

Y Pilot-oil drain (to tank without back-pressure)

M Pressure-gauge port (with G 1/4” threaded plug, ED VSTI)

6 Installation information

IMPORTANT!
When installing the valve, make sure that the mating face (the manifold interface) aligns with the valve interface. Do not confuse the sandwich valve's manifold side and directional-valve side. No adjustments are necessary, since the cartridges are set in the factory.

ATTENTION!
Only qualified personnel with mechanical skills may carry out any maintenance work. Generally, the only work that should ever be undertaken is to check, and possibly replace, the seals. When changing seals, oil or grease the new seals thoroughly before fitting them.

ATTENTION!
To achieve the proportional 3-way pressure-reducing cartridge's maximum performance rating, fit the solenoid coil as shown (with the plug pins at the right). Use the specified tightening torque when fitting the cartridge.

Seal kit NBR no. DS-397-N 3)

Item	Qty.	Description
1	5	O-ring no. 014 ∅ 12,42 x 1,78 N90
2	1	NBR seal kit no. DS-394-N for pressure-reducing cartridge DRVSA-7P…

IMPORTANT!
3) Seal kit with FKM (Viton) seals, no. DS-397-V

7 Ordering code

Ex. S DRV S A - 7 35 - P - 10 _ 24 VDC _

S	=	sandwich design
DRV	=	pressure-reducing cartridge, two stage
S	=	standard solenoid (proportional)
A ... Q	=	standard model - see relevant data sheets
Z ... R	=	special features - please consult BUCHER
7	=	pressure function 7, 3-way (external pilot-oil drain through Y)
35	=	pressure range …350 bar
25	=	pressure range …250 bar
16	=	pressure range …160 bar
10	=	pressure range …100 bar
P	=	function in P
AZR	=	function in A for flow IN, with bypass check valve
10	=	ISO size 05 interface
(blank)	=	NBR (Nitrile) seals (**standard**)
V	=	FKM (Viton) seals (special seals - please contact BUCHER)
...	=	voltage e.g. **24** (24 V)
(blank)	=	DIN EN 175301-803 connection with mating plug (**standard, IP 65**)
M100	=	DIN EN 175301-803 connection without mating plug
C	=	Kostal plug connection (IP 65)
JT	=	Junior Timer radial plug connection (with protection diode, IP65)
IT	=	Junior Timer axial plug connection (with protection diode, IP65)
D	=	Deutsch plug connection 45° DT04-2P (IP67/69K)
DT	=	Deutsch plug connection 45° DT04-2P (with protection diode, IP67/69K)
S	=	AMP Superseal 1.5 (IP67) / Metri-Pack 150 (IP65) plug connection
F	=	flying leads (500 mm)

mating plug not supplied

8 Related data sheets

Reference	(Old no.)	Description
400-P-050101	(i-41)	Size 05 interface to ISO 4401-05-04
400-P-120110	(W-2.141)	Coils for screw-in cartridge valves
400-P-591101		Prop. 3-way pressure-reducing valve, size 10, series DRVSA-7P…-10…
400-P-510101		Amplifier unit for proportional valves (1-channel) PBS - 3A

info.ch@bucherhydraulics.com www.bucherhydraulics.com

© 2021 by Bucher Hydraulics AG Frutigen, CH-3714 Frutigen
All rights reserved.
Data is provided for the purpose of product description only, and must not be construed as warranted characteristics in the legal sense. The information does not relieve users from the duty of conducting their own evaluations and tests. Because the products are subject to continual improvement, we reserve the right to amend the product specifications contained in this catalogue.

Classification: 430.305.305.330.320.310

BUCHER hydraulics

WWW.SUMY.IR

Stacking Sequence and Preload Valve, size 3
with integral Bypass Check Valve
Direct Acting Seat Valve Design, Series SDDB-3 ...

- 80 l/min, 350 bar
- With direct acting, zero leakage, 10 mm pressure relief cartridge DDPB-3D-10...
- 350 bar, 80 l/min on all ports for ..PP-6
- 315 bar, 80 l/min on all ports for ..AR-6
- Cartridge spring chamber is drained to port T
- ISO 4401/CETOP R35H size 3, NFPA D03, DIN 24 340 A6 interface

1. Description

Series SDDB-3-...-6 stack valves are used for sequence-, preload- and load-holding functions. They are equipped with the direct acting pressure relief cartridge type DDPB-3D-10... . The valves close with virtually zero leakage; their fast response also suits them for cross-line relief duties in service lines. The spring chamber of the cartridge is drained to port T - the pressure setting is therefore unaffected by fluctuations of the secondary pressure in P1, A1 or B1. The bypass check valve in models SDDB-3-AAAR-6... and SDDB-3-BB AR-6... allows reverse flow from A1 to A, or B1 to B. Used as sequence valves, rising pressure results in an insignificant increase in the leakage to T (see Performance Data). The screw-in design of the cartridge valve provides for straight-forward, trouble-free maintenance. Interface sealing is by means of O-rings which are retained in counterbores in the valve body.

2. Symbols

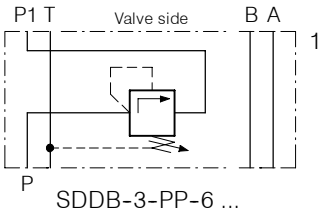

SDDB-3-PP-6 ...

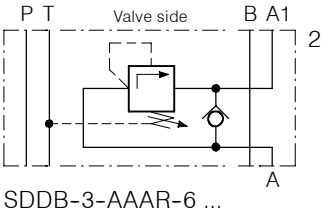

SDDB-3-AAAR-6 ...

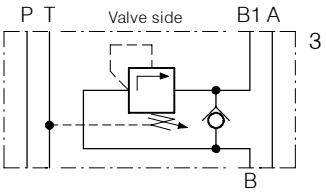

SDDB-3-BBAR-6 ...

3. Characteristics

Type		stacking pressure sequence valve
Design		direct acting, seat type
Mounting method		stack mounting
Size		ISO 4401 size 3 interface
Mass	kg	SDDB-3-PP-6 ... = 1,60; ..AAAR.. / ..BBAR.. = 1,75
Mounting attitude		unrestricted
Flow direction		see symbols
Operating pressure in P, A, B and T	bar	..PP-6..: ... 350 ..AR-6..: ... 315
Adjustment ranges	bar	pressure range N = 180 ... 350 / 315 pressure range M = 080 ... 240 pressure range L = 010 ... 100
Flow rate Qmax	l/min	80, see performance limits
Fluids		Hydraulic oils HL and HLP to DIN 51 524, other fluids contact BUCHER
Fluid temperature range	°C	-25 ... + 80
Ambient temperature	°C	-25 ... + 80

Viscosity range	cSt	10 ... 650, recommended 15 ... 250
Minimum fluid cleanliness		18/14 to ISO 4406 /CETOP RP70H 8 ... 9 to NAS 1638

4. Performance graphs

Oil viscosity 33 cSt

SDDB-...-6-SN
p-Q characteristics
P ⇒ P1 (A ⇒ A1 / B ⇒ B1)
with p in T = 0 (bar)

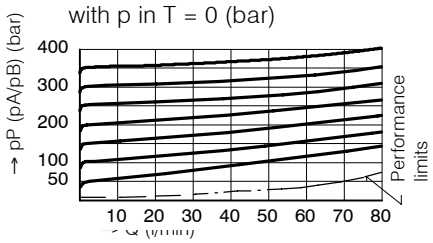

SDDB-...-6-SM
p-Q characteristics
P ⇒ P1 (A ⇒ A1 / B ⇒ B1)
with p in T = 0 (bar)

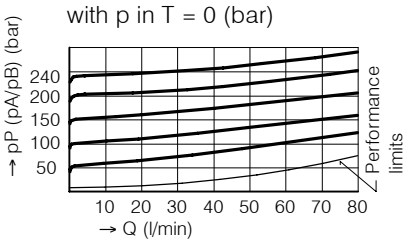

SDDB-...-6-SL
p-Q characteristics
P ⇒ P1 (A ⇒ A1 / B ⇒ B1)
with p in T = 0 (bar)

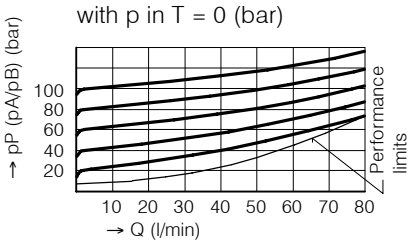

Leakage Q_L
from P, A or B to T

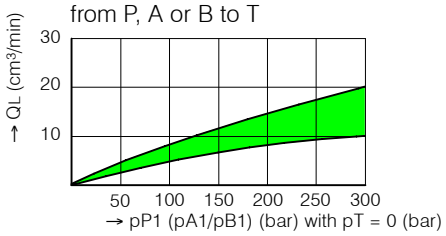

Δp-Q characteristics A1 ⇒ A or B1 ⇒ B
through bypass check valve

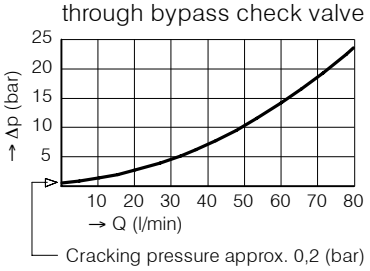

5. Dimensions

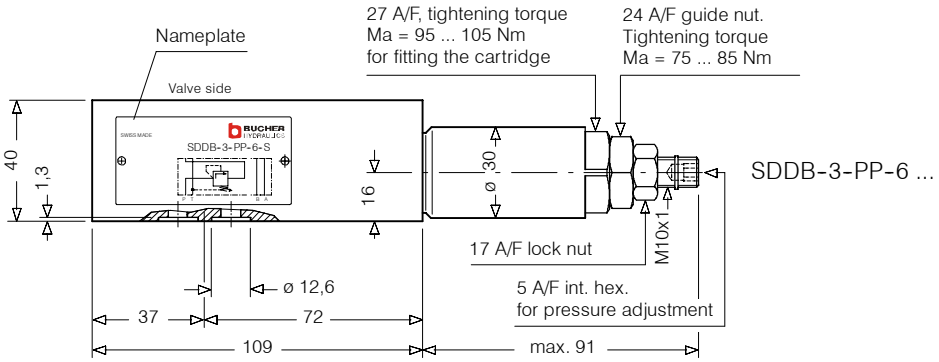

SDDB-3-PP-6 ...

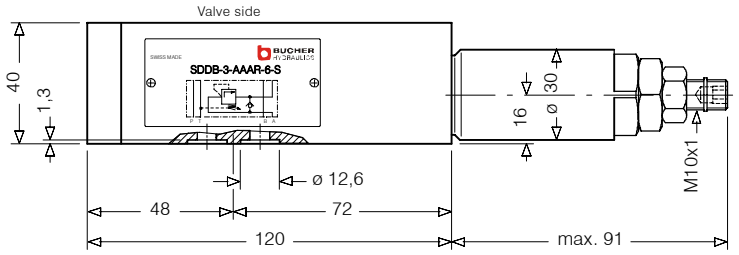

SDDB-3-AAAR-6 ...
SDDB-3-BBAR-6 ...

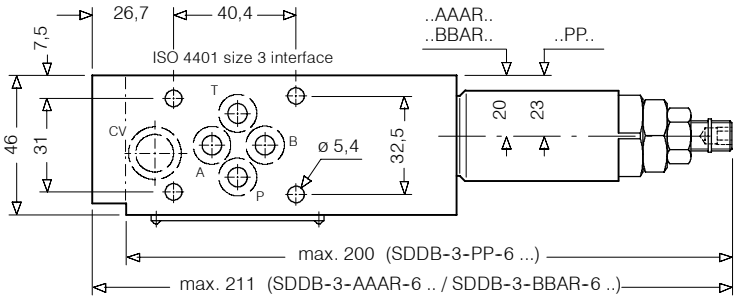

6. Schematic section

showing the relevant ports
Ex. SDDB-3-AAAR-6 ...

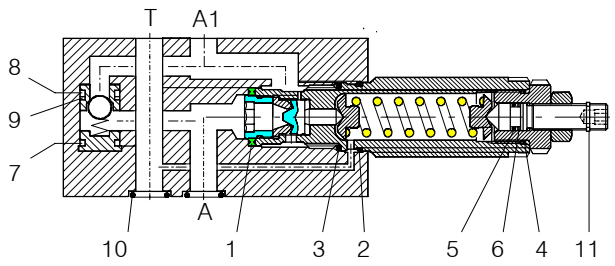

Seal kit no. DS-258, comprising:

Itm.	Qty.	Qty.	Description	Size
1	1	1	Seal	∅ 22.1/16.1x2.5
2	1	1	O-ring no. 020	∅ 21.95x1.78 N90
3	1	1	O-ring	∅ 21.00x2.00 N75
4	1	1	O-ring no. 017	∅ 17.17x1.78 N90
5	1	1	O-ring no. 011	∅ 7.65x1.78 N90
6	1	1	Backup ring	∅ 6,1x1,45x1,4
7	-	1	O-ring no. 015	∅ 14.00x1.78 N90
8	-	1	O-ring no. 012	∅ 9.25x1.78 N90
9	-	1	Backup ring	∅ 7,6x1,5x1,4
10	4	4	O-ring no. 012	∅ 9.25x1.78 N90
11	1	1	Snap ring	∅ 9 Typ SS

SDDB-3-BBAR-6 .../SDDB-3-AAAR-6 ...
SDDB-3-PP-6 ...

7. Installation and servicing

All installation and servicing must be carried out with care, and by qualified personnel only. At installation, be sure to mount the valve with the correct faces contacting the adjacent units and with all interface connections lining up properly. When changing seals, the new seals should be thoroughly oiled or greased before fitting them to the valve. Use the correct tightening torques when fitting the cartridge and guide nut.

8. Model code key

Ex. S D D B - 3 - AA A R - 6 - S N _

S = stacking valve
D = pressure function
D = direct acting
A ... Q = standard model per current data sheet
Z ... R = special features by arrangement
3 = pressure control type 3
PP = function from P to P1
AA = function from A to A1
BB = function from B to B1
A = sequencing from actuator ...AAAR... and ...BBAR... only
R = with bypass check valve ...AAAR... and ...BBAR... only
6 = ISO 4401 size 3 interface
S = with hex. skt. screw adjuster
N = pressure range 180 ... 350/315 bar
M = pressure range 80 ... 240 bar
L = pressure range 10 ... 100 bar
(blank) = Nitrile seals (standard)
V = Viton seals
For special seals, contact BUCHER

9. Related data sheets

Old no.	New no.	
i-00	400-P-010101-E	Table of interface equivalents
i-31	400-P-030501-E	DIN 24 340 size A6 interface
D-3.32	400-P-270201-E	Direct acting pressure relief cartridge, 10 mm, series DDPB-3D-10 ...

info.ch@bucherhydraulics.com www.bucherhydraulics.com

© 2015 by Bucher Hydraulics AG Frutigen, CH-3714 Frutigen
All rights reserved.
Data is provided for the purpose of product description only, and must not be construed as warranted characteristics in the legal sense. The information does not relieve users from the duty of conducting their own evaluations and tests. Because the products are subject to continual improvement, we reserve the right to amend the product specifications contained in this catalogue.

Stacking Sequence and Preload Valve, 6 mm
With integral Bypass Check Valve
Seated Pilot Stage, Spool-type Main Stage, Series SDVB-3 ...

- 80 l/min, 350/315 bar
- With two-stage 10 mm pressure relief cartridge DVPA-3-10...
- ..PP-6: 350 bar, 80 l/min on all ports
  ..AR-6: 315 bar, 80 l/min on all ports
- Pilot stage is drained to port T
- Optionally available with hand knob or lockable hand knob, adjuster
- Also available with solenoid controlled two-pressure cartr. WUVPB-3...-10
- ISO 4401 CETOP RP35H size 3, NFPA D03, DIN 24 340 A6 interface

1. Description

Series SDVB-3...-6 stack valves are used for sequence- and preload functions. They are equipped with the two-stage pressure relief cartridge type DVPA-3-10... When closed, the valves shut off the relief path with spool-type leakage (see performance data). The pilot stage of the cartridge is drained to port T - the pressure setting is therefore unaffected by fluctuations of the secondary pressure in P1, A1 or B1. The bypass check valve in models SDVB-3-AAAR-6... and SDVB-3-BBAR-6... allows reverse flow from A1 to A or B1 to B. NOTE: After the connection P - P1 (or A - A1, B - B1) has opened, pilot oil drain flow to T will increase with rising system pressure (see performance data). The screw-in design of the cartridge valve provides for straight-forward, trouble-free maintenance. Interface sealing is by means of O-rings which are retained in counterbores in the valve body.

2. Symbols

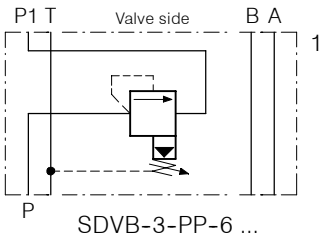

SDVB-3-PP-6 ...

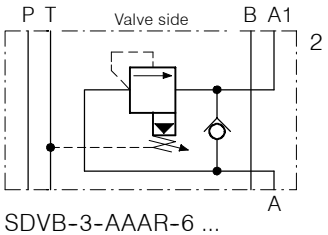

SDVB-3-AAAR-6 ...

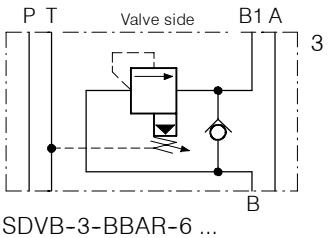

SDVB-3-BBAR-6 ...

3. Characteristics

Type		stacking pressure sequence valve
Design		two-stage, sliding spool
Mounting method		stack mounting
Size		ISO 4401 size 3 interface
Mass	kg	SDVB-3-PP-6 = 1,50; SDVB-3-AAAR / BBAR-6 = 1,65
Mounting attitude		unrestricted
Flow direction		see symbols
Operating pressure in P, A, B and T	bar	..PP-6..: ... 350 ..AR-6..: ... 315
Adjustment ranges	bar	pressure range N = 010 ... 350/315 pressure range M = 010 ... 210 pressure range L = 010 ... 065
Flow rate Qmax	l/min	80, see performance limits
Fluids		Hydraulic oils HL and HLP to DIN 51 524, other fluids contact BUCHER

Fluid temperature range	°C	-25 ... + 80
Ambient temperature	°C	-25 ... + 80
Viscosity range	cSt	10 ... 650, recommended 15 ... 250
Minimum fluid cleanless		18/14 to ISO 4406 /CETOP RP70H 8 ... 9 to NAS 1638

4. Performance graphs

Oil viscosity 33 cSt

SDVB-3-PP-6-..N
p-Q characteristics P ⇒ P1
with p in T = 0 (bar)

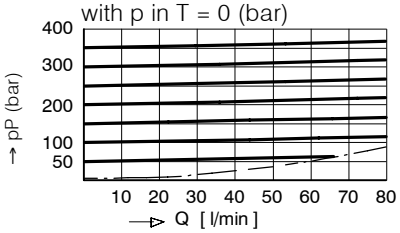

SDVB-3-PP-6-..M
p-Q characteristics P ⇒ P1
with p in T = 0 (bar)

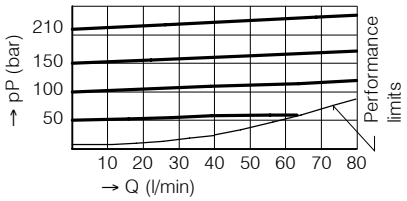

SDVB-3-PP-6-..L
p-Q characteristics P ⇒ P1
with p in T = 0 (bar)

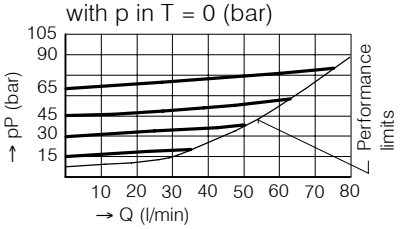

SDVB-3-..AR-6-..N
p-Q characteristics A ⇒ A1,
B ⇒ B1 with p in T = 0 (bar)

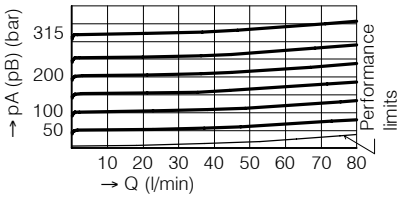

SDVB-3-..AR-6-..M
p-Q characteristics A ⇒ A1,
B ⇒ B1 with p in T = 0 (bar)

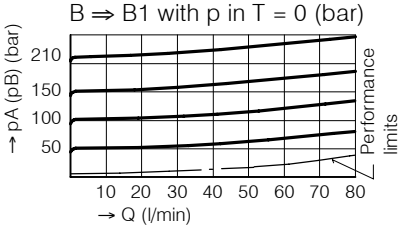

SDVB-3-..AR-6-..L
p-Q characteristics A ⇒ A1,
B ⇒ B1 with p in T = 0 (bar)

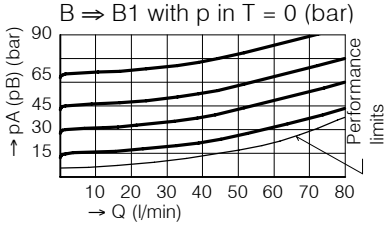

Leakage P ⇒ P1, A ⇒ A1,
B ⇒ B1

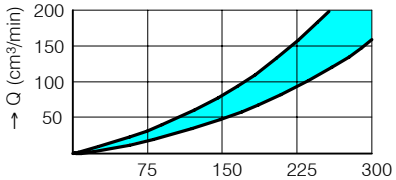

Pilot flow to T

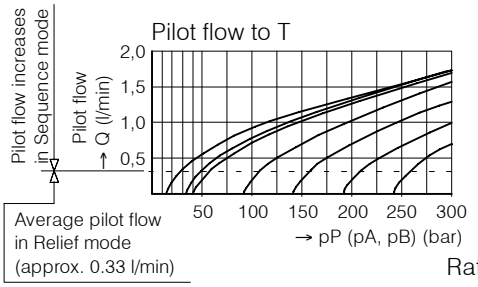

Δp-Q characteristics A1 ⇒ A,
B1 ⇒ B through bypass
check valve

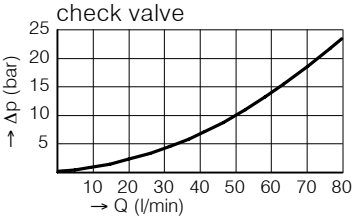

Rate of pressure change
when turning the adjusting screw

SDVB-3-..-6-..N:1 turn ≙ approx. 60 (bar)
SDVB-3-..-6-..M:1 turn ≙ approx. 38 (bar)
SDVB-3-..-6-..L: 1 turn ≙ approx. 13 (bar)

5. Dimensions

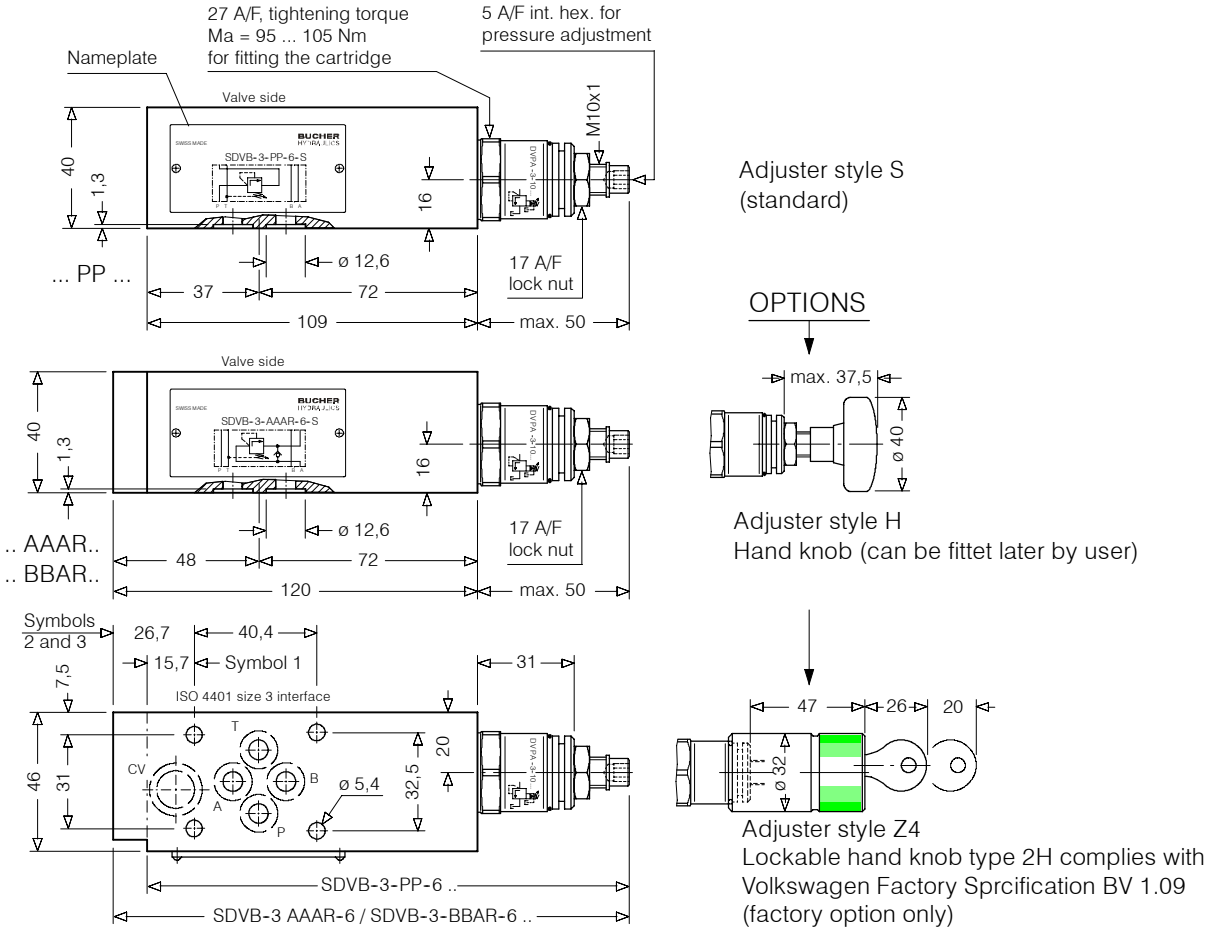

6. Schematic section

showing the relevant ports
Ex. SDVB-3-AAAR-6- ...

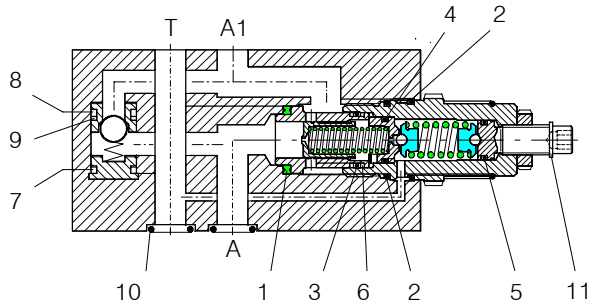

Seal kit no. DS-260, comprising:

Itm.	Qty.	Qty.	Description	Size
1	1	1	Seal	∅ 22.1/16.5x2.5
2	2	2	O-ring no. 020	∅ 21.95x1.78 N90
3	1	1	O-ring	∅ 14.00x2.00 N90
4	1	1	O-ring no. 013	∅ 10.82x1.78 N90
5	1	1	O-ring no. 012	∅ 9.25x1.78 N90
6	2	2	Backup ring	∅ 13,7X1,4X1,15
7	--	1	O-ring no. 015	∅ 14.00x1.78 N90
8	--	1	O-ring no. 012	∅ 9.25x1.78 N90
9	--	1	Backup ring	∅ 7,6X1,5X1,4
10	4	4	O-ring no. 012	∅ 9.25x1.78 N90
11	1	1	Snap ring	∅ 9 Typ SS

SDVB-3-BBAR.../-AAAR...
SDVB-3-PP-6

WWW.SUMY.IR

7. Installation and servicing

All installation and servicing must be carried out with care, and by qualified personnel only. At Installation, be sure to mount the valve with the correct faces contacting the adjacent units and with all interface connections lining up properly. When changin seals, the new seals should be thoroughly oiled or greased before fitting them to the valve. Use the correct tightening torque when fitting the cartridge.

8. Model code key

Ex. S D V B - 3 - AA A R - 6 - S N _

S = stacking valve
D = pressure function
V = two-stage
A ... Q = standard model per current data sheet
Z ... R = special features by arrangement
3 = pressure control type 3
PP = function from P to P1
AA = function from A to A1
BB = function from B to B1
A = sequencing from actuator ...AAAR... and ...BBAR... only
R = with bypass check valve ...AAAR... and ...BBAR... only
6 = ISO 4401 size 3 interface
S = with hex. skt. screw adjuster (standard)
H = with hand knob adjuster
Z = with lockable hand knob adjuster type Z4
N = pressure range 10 ... 350/315
M = pressure range 10 ... 210 bar
L = pressure range 10 ... 65 bar
(blank) = Nitrile seals (standard)
V = Viton seals
For special seals, contact BUCHER

9. Related data sheets

Old no.	New no.	
i-00	400-P-010101-E	Table of interface equivalents
i-31	400-P-030501-E	DIN 24 340 size A6 interface
D-4.33	400-P-280121-E	Two-stage pressure relief cartridge, 10 mm, series DVPA-3-10 ...

Stacking Sequence and Preload Valve, 10 mm
with integral Bypass Check Valve
Direct Acting Seat Valve Design, Series SDDB-3 ...

- 350 bar, 100 l/min
- With direct acting, zero leakage 10 mm pressure relief cartridge DDPB-3D-10...
- 350 bar, 100 l/min on all ports
- Pilot stage is drained to port T
- Mounting interface to ISO 4401 / CETOP RP35H size5, NFPA D05, DIN 24 340 A10

1. Description

Series SDDB-3-...-10 stack valves are used for sequence-, preload- and loadholding functions. They are equipped with the direct acting pressure relief cartridge type DDPB-3D-10... . The valves close with virtually zero leakage and their fast response suits them for pressure relief-, cross-line relief and preload functions. The pilot stage of the cartridge is drained to port T - the pressure setting is therefore unaffected by fluctuations of the secondary pressure in P1, A1 or B1. The bypass check valve in models SDDB-3-AA... and SDDB-3-BB... allows reverse flow from A1 to A or B1 to B. Used as sequence valves, rising pressure results in an insignificant increase in the leakage to T (see performance graphs). Turning model ...-AAZR-... upside down about its short axis produces the ...-BBAR-... function and vice versa. Turning model ...-AAAR-... upside down about ist short axis produces the ..-BBZR-.. function and vice versa. The side-mounted nameplate shows the correct orientation for the required function. The screw-in design of the cartridge valve provides for straight-forward, trouble-free maintenance. Interface sealing is by means of a seal plate and 5 O-rings.

2. Symbols

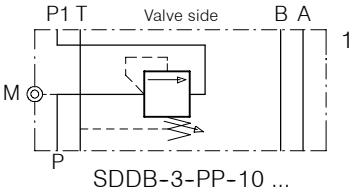

SDDB-3-PP-10 ...

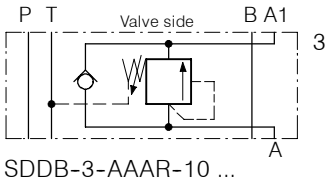

SDDB-3-AAAR-10 ...

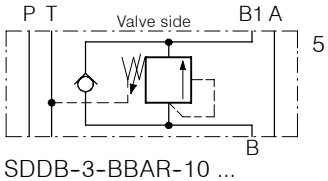

SDDB-3-BBAR-10 ...

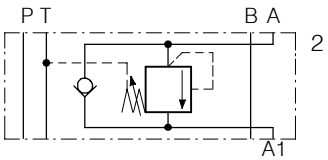

SDDB-3-AAZR-10 ...

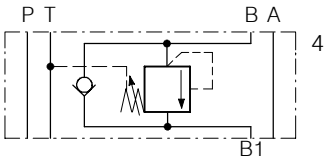

SDDB-3-BBZR-10 ...

3. Main characteristics

Designation		Stacking pressure sequence valve
Design		direct acting, seat type
Mounting method		stack mounting
Size		ISO 4401 size 5 interface
Weight	kg	3,05
Mounting attitude		unrestricted
Flow direction		see symbols
Operating pressure range	bar	... 350 in P, T, A and B
Adjustment ranges	bar	pressure range N = 180 ... 350 pressure range M = 080 ... 240 pressure range L = 010 ... 100
Flow rate, Qmax	l/min	100, see performance limits
Fluids		HL and HLP hydraulic oils to DIN 51 524; for other fluids, please consult BUCHER
Fluid temperature range	°C	-25 ... +80
Ambient temperature	°C	-25 ... +80
Viscosity range	mm^2/s (cSt)	10 ... 650, recommended 15 ... 250
Minimum fluid cleanliness level		18/14 to ISO 4406 / CETOP RP70H; 8 ... 9 to NAS 1638

4. Performance graphs

Measured with oil viscosity 33 mm^2/s (cSt)

SDDB-3 ...-10-SN
p-Q characteristics
with p in T = 0 (bar)

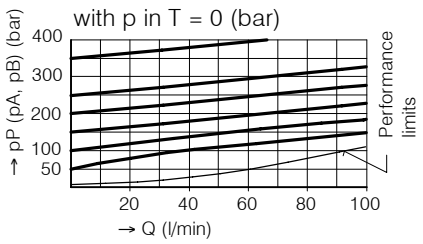

SDDB-3 ...-10-SM
p-Q characteristics
with p in T = 0 (bar)

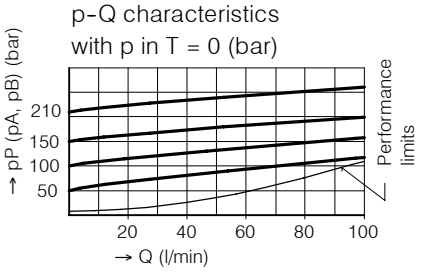

SDDB-3 ...-10-SL
p-Q characteristics
with p in T = 0 (bar)

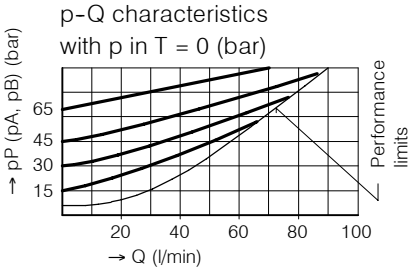

Leakage Q_L
from P (A, B) to T

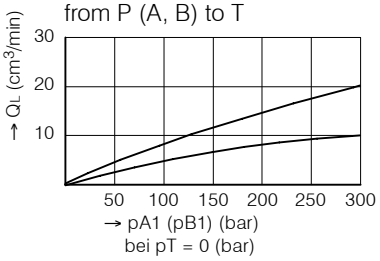

Δp-Q characteristics A1 → A, B1 → B
through bypass check valve

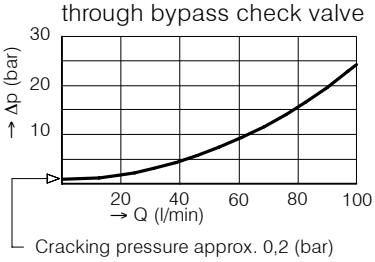

5. Dimensions

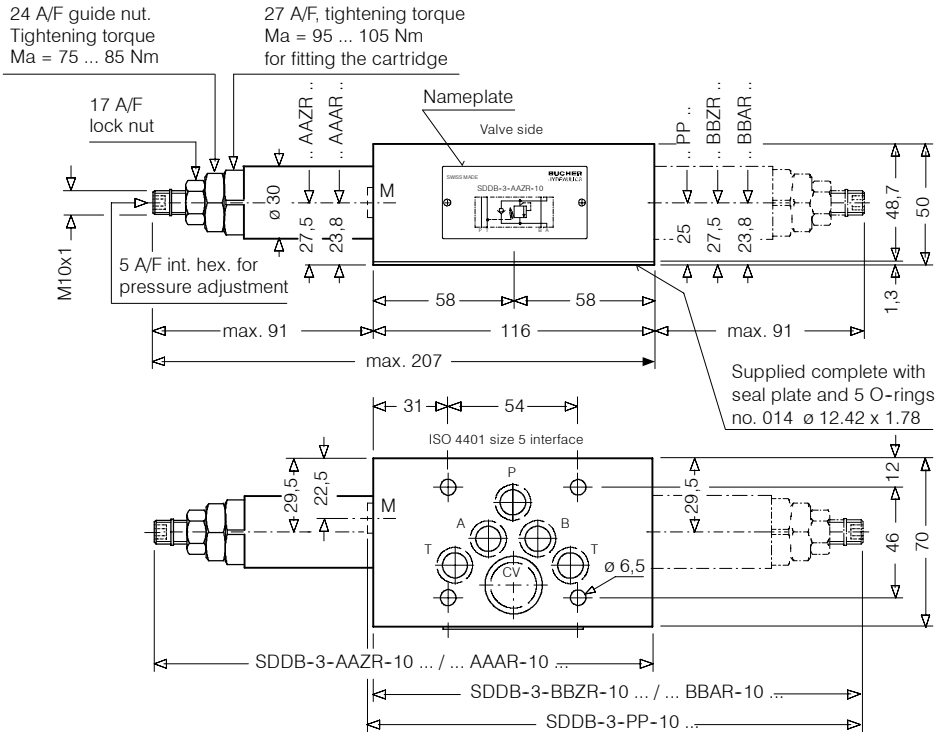

6. Schematic section

showing the relevant ports
Ex. SDDB-3-AAZR-10 ...

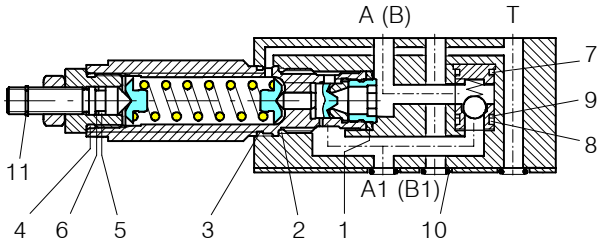

Seal kit no. DS-222, comprising *):

Itm.	Qty.	Qty.	Description	Size
1	1	1*)	Seal	∅ 22,1 x 16,1 x 2,5
2	1	1*)	O-ring	∅ 21 x 2 N75
3	1	1*)	O-ring no. 020	∅ 21,95 x 1,78 N90
4	1	1*)	O-ring no. 017	∅ 17,17 x 1,78 N90
5	1	1*)	O-ring no. 011	∅ 7,65 x 1,78 N90
6	1	1*)	Backup ring	∅ 9,0/6,1 x 1,4 FI0751
7	-	1*)	O-ring no. 018	∅ 18,77 x 1,78 N90
8	-	1*)	O-ring no. 016	∅ 15,60 x 1,78 N90
9	-	1*)	Backup ring	∅ 15,3/1,5 x 1,4 FI0751
10	5	5*)	O-ring no. 014	∅ 12,42 x 1,78 N90
11	1	1*)	Snap ring	∅ 9 type SS

SDDB-3-AAAR/BBZR/AAZR/BBAR-10
SDDB-3-PP-10 ...

7. Installation and servicing

All installation and servicing must be carried out with care, and by qualified personnel only. At installation, be sure to mount the valve with the correct faces contacting the adjacent units and with all interface connections lining up properly. When changing seals, the new seals should be thoroughly oiled or greased before fitting them to the valve. Use the correct tightening torques when fitting the cartridge and guide nut.

8. Ordering code

S D D B - 3 - AA Z R - 10 - S N _

S	=	stacking valve
D	=	pressure function
D	=	direct acting
A ... Q	=	standardmodel per current data sheet
Z ... R	=	special features by arrangement
3	=	pressure control type 3
PP	=	function from P to P1
AA	=	function from A to A1
BB	=	function from B to B1
A	=	sequencing from actuator
Z	=	sequencing to actuator
R	=	with bypass check valve
10	=	ISO 4401 size 5 interface
S	=	with hex. skt. screw adjuster
N	=	pressure range 180 ... 350 bar
M	=	pressure range 80 ... 240 bar
L	=	pressure range 10 ... 100 bar
(blank)	=	Nitrile seals (standard)
V	=	Viton seals
Special seals by arrangement		

...AR... and ...ZR... only

...AR... and ...ZR... only

9. Related data sheets

Old no.	New no.	
i-00	400-P-010101-E	Table of interface equivalents
i-41	400-P-050101-E	DIN 24 340 size A10 interface
D-3.32A	400-P-270201-E	Direct acting pressure relief cartridge, 10 mm, series DDPB-3D-10 ...
G-45	400-P-810801-E	Seal plate type DB-10

info.ch@bucherhydraulics.com www.bucherhydraulics.com

© 2015 by Bucher Hydraulics AG Frutigen, CH-3714 Frutigen
All rights reserved.
Data is provided for the purpose of product description only, and must not be construed as warranted characteristics in the legal sense. The information does not relieve users from the duty of conducting their own evaluations and tests. Because the products are subject to continual improvement, we reserve the right to amend the product specifications contained in this catalogue.

Stacking Sequence and Preload Valve, size 5
with integral Bypass Check Valve, Seated Pilot Stage, Spool-type Main Stage, Series SDVB-3 ...

- 350 bar, 140 l/min
- With two-stage 10 mm pressure relief cartridge DVPA-3-10...
- 350 bar, 140 l/min on all ports
- Cartridge spring chamber is drained to port T
- Optionally available with hand knob, or lockable hand knob, adjuster
- Also available with solenoid controlled two-pressure cartridge WUVPB-3...-10
- ISO 4401 / CETOP R35H size 5, NFPA D05, DIN 24 340 A10 interface

1. Description

Series SDVB-3...-10 stack valves are used for sequence- and preload functions. They are equipped with the two-stage pressure relief cartridge type DVPA-3-10... . When closed, the valves shut off the relief path with spool-type leakage (see performance graphs). The cartridge spring chamber is drained to port T - the pressure setting is unaffected by fluctuations of the secondary pressure. The bypass check valve in models SDVB-3-...AR-10... and SDVB-3-...BR-10... allows reverse flow from A1 to A, or B1 to B.
NOTE: after the connection P → P1 (or A → A1, B → B1) has opened, pilot oil drain flow to T will increase with rising system pressure (see performance graphs).
Turning model SDVB-3-AAZR-10 upside down about its short axis produces the SDVB-3-BBAR-10 function and vice versa. Ditto SDVB-3-AAAR-10 and ...-BBZR... The side-mounted nameplate indicates the correct orientation for the required function. The screw-in design of the cartridge valve provides for straight-forward, trouble-free maintenance. Interface sealing is by means of a seal plate and 5 O-rings.

2. Symbols

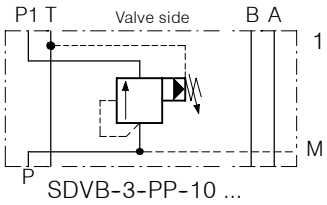

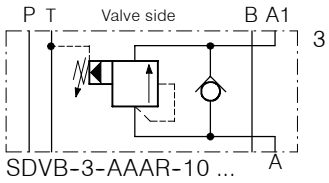

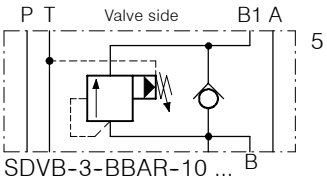

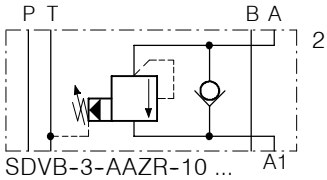

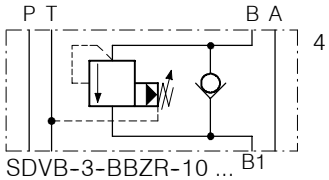

3. Main characteristics

Designation		Stacking pressure sequence valve
Design		two-stage, seated pilot, sliding spool
Mounting method		stack mounting
Size		ISO 4401 size 5 interface
Weight	kg	SDVB-3-PP-10 ... = 2,9, SDVB-3-...AR / ZR-10 ... = 2,8

Mounting attitude		unrestricted
Flow direction		see symbols
Operating pressure range	bar	... 350 in P, A, B and T
Adjustment ranges	bar	pressure range N = 010 ... 350 pressure range M = 010 ... 210 pressure range L = 010 ... 065
Flow rate, Qmax	l/min	1 ... 140, see performance limits
Fluids		HL and HLP hydraulic oils to DIN 51 524; for other fluids, please consult BUCHER
Fluid temperature range	°C	-25 ... +85
Ambient temperature	°C	-25 ... +85
Viscosity range	mm^2/s (cSt)	10 ... 650, recommended 15 ... 250
Minimum fluid cleanliness level		18/14 to ISO 4406 / CETOP RP70H; 8 ... 9 to NAS 1638

4. Performance graphs

Measured with oil viscosity 33 mm^2/s (cSt)

SDVB-3-PP-10-..N
p-Q characteristics
with p in T = 0 (bar)

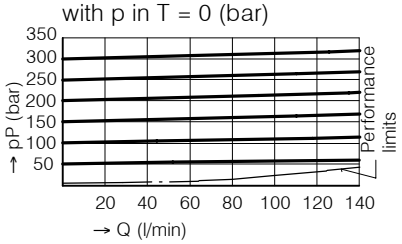

SDVB-3-PP-10-..M
p-Q characteristics
with p in T = 0 (bar)

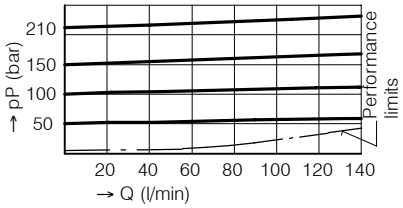

SDVB-3-PP-10-..L
p-Q characteristics
with p in T = 0 (bar)

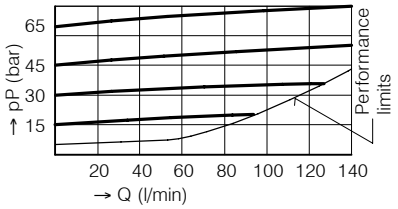

SDVB-3-..AR / ZR-10-..N
p-Q characteristics
with p in T = 0 (bar)

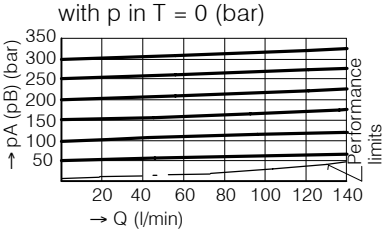

SDVB-3-..AR / ZR-10-..M
p-Q characteristics
with p in T = 0 (bar)

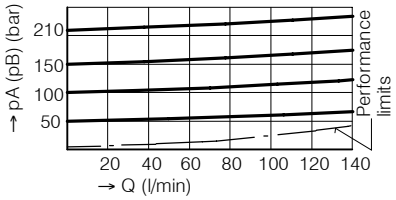

SDVB-3-..AR / ZR-10-..L
p-Q characteristics
with p in T = 0 (bar)

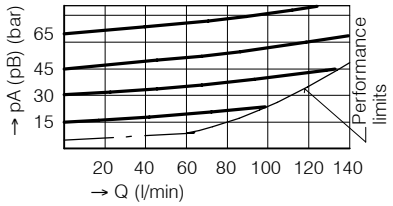

Leakage P→P1
A→A1, B→B1

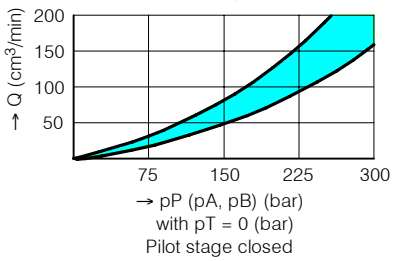

Pilot flow to T

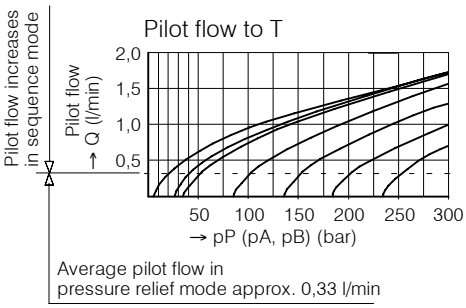

Δp-Q char. A1→A bzw. B1→B
through bypass check valve

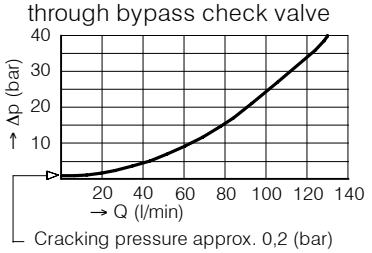

Rate of pressure change
when turning the adjusting screw:

SDVB-3-..-10-..N	1 turn ≙ app. 60 (bar)
SDVB-3-..-10-..M	1 turn ≙ app. 38 (bar)
SDVB-3-..-10-..L	1 turn ≙ app. 13 (bar)

5. Dimensions

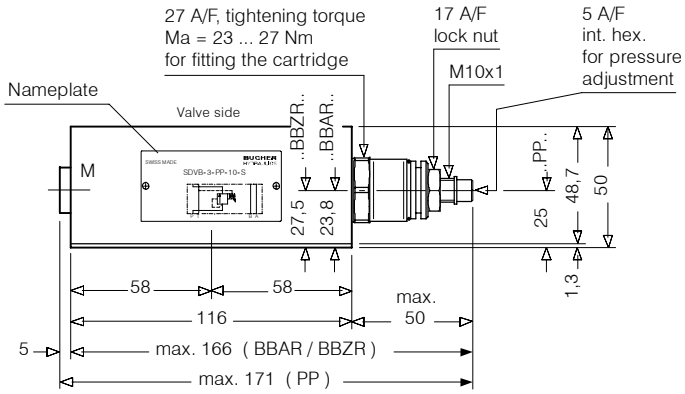

Adjuster style S
(Standard)

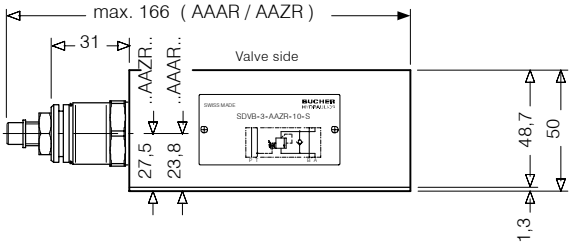

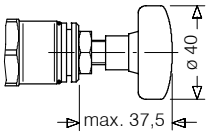

OPTIONS

Adjuster style H
Hand knob (can be fitted later by user)

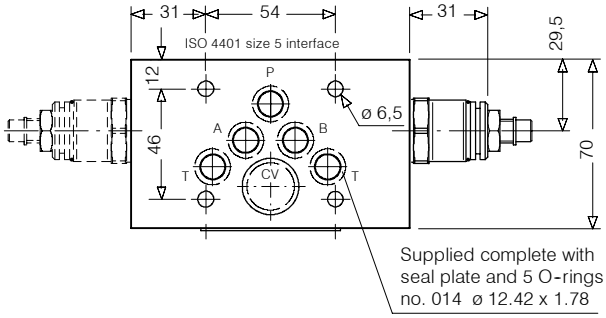

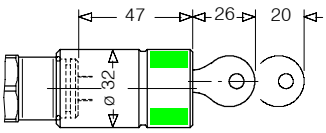

Adjuster style Z4
Lockable hand knob type 2H complies with Volkswagen Factory Sprcification BV 1.09 (factory option only)

6. Schematic section

showing the relevant ports
Ex. SDVB-3-BBZR-10 ...

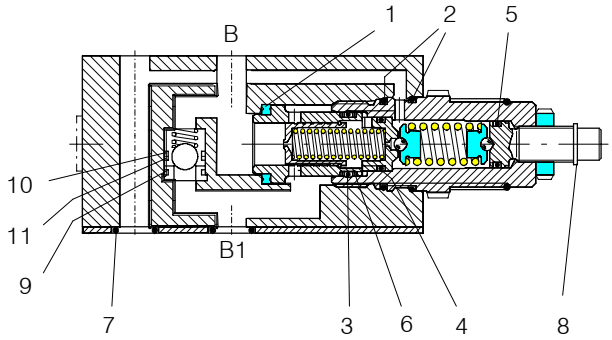

Seal kit no. DS-221, comprising *):

Itm.	Qty.	Qty.	Description	Size
1	1	1*)	Seal	∅ 22,1 x 16,5 x 2,5
2	2	2*)	O-ring no. 020	∅ 21,95 x 1,78 N90
3	1	1*)	O-ring	∅ 14 x 2
4	1	1*)	O-ring no. 013	∅ 10,82 x 1,78 N90
5	1	1*)	O-ring no. 012	∅ 9,25 x 1,78 N90
6	2	2*)	Backup ring	∅ 13,7/1,5x1,4 FI0751
7	5	5*)	O-ring no. 014	∅ 12,42 x 1,78 N90
8	1	1*)	Snap ring	∅ 9 type SS
9	-	1*)	O-ring no. 018	∅ 18,77 x 1,78 N90
10	-	1*)	O-ring no. 016	∅ 15,60 x 1,78 N90
11	-	1*)	Backup ring	∅ 15,3/1,5x1,4 FI0751

SDVB-3-AAAR/ZR / BBAR/ZR-10 ...
SDVB-3-PP-10 ...

7. Installation and servicing

All installation and servicing must be carried out with care, and by qualified personnel only. At installation, be sure to mount the valve with the correct faces contacting the adjacent units and with all interface connections lining up properly. When changing seals, the new seals should be thoroughly oiled or greased before fitting them to the valve. Use the correct tightening torques when fitting the cartridge.

8. Ordering code

Ex. S D V B - 3 - AA Z R - 10 - S N _

S	=	stacking valve
D	=	pressure relief function
V	=	two-stage
A ... Q	=	standard model per current data sheet
Z ... R	=	special features by arrangement
3	=	pressure control type 3
PP	=	function from P to P1
AA	=	function from A to A1
BB	=	function from B to B1
A	=	sequencing from actuator (...AR... and ...ZR... only)
Z	=	sequencing to actuator (...AR... and ...ZR... only)
R	=	with bypass check valve (...AR... and ...ZR... only)
10	=	ISO 4401 size 5 interface
S	=	with hex. skt. screw adjuster (standard)
H	=	with hand knob adjuster
Z	=	with lockable hand knob adjuster type Z4
N	=	pressure range 10 ... 350 bar (Normal)
M	=	pressure range 10 ... 210 bar (Medium)
L	=	pressure range 10 .... 65 bar (Light)
(blank)	=	Nitrile seals (standard)
V	=	Viton seals
Special seals by arrangement		

9. Related data sheets

Old no.	New no.	
i-00	400-P-010101-E	Table of interface equivalents
i-41	400-P-050101-E	DIN 24 340 size A10 interface
D-4.33	400-P-280121-E	Two-stage pressure relief cartridge, 10 mm, series DVPA-3-10 ...
G-45	400-P-810901-E	Seal plate type DB-10

info.ch@bucherhydraulics.com www.bucherhydraulics.com

© 2015 by Bucher Hydraulics AG Frutigen, CH-3714 Frutigen
All rights reserved.
Data is provided for the purpose of product description only, and must not be construed as warranted characteristics in the legal sense. The information does not relieve users from the duty of conducting their own evaluations and tests. Because the products are subject to continual improvement, we reserve the right to amend the product specifications contained in this catalogue.

BUCHER hydraulics

WWW.SUMY.IR

Stacking Anti-Shock Relief Valve, size 2
Direct Acting, Cross-Line
Series SDDA ... S

- 250 bar, 25 l/min
- Direct acting, near zero-leakage poppet
- Functional parts in side-mounted body
- Fast response time
- 5 pressure ranges
- User-modifiable to hand knob or lokkable hand knob adjustment
- with ISO 4401-02-01 interface

1. Description

Series SDDA ... S-4 units are stack mounting anti-shock cross-line relief valves which relieve A to B and/or B to A. They have fast response times, seat valves with near zero-leakage, and they have the full flow rating of the size 2 range. The ∅ 3 mm location pin on the actuator face of the valve prevents incorrect mounting. Valves are shipped as standard with screw adjustment. Alternatively, they can be supplied with adjustment by hand knob, or lockable hand knob.

2. Symbols

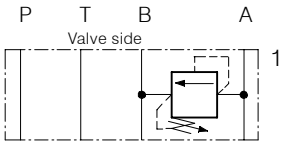

SDDA-AS-4 ...

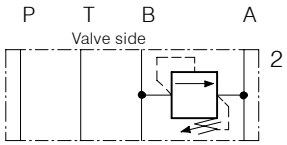

SDDA-BS-4 ...

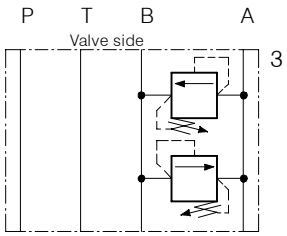

SDDA-ABS-4 ...

3. Main characteristics

Designation		pressure relief slice valve
Design		direct acting seat valve
Mounting method		stack mounting
Size		ISO 4401-02-01 interface
Weight	kg	Model ...AS.../ ...BS...: 0,77/ Model ...ABS...:1,15
Mounting attitude		unrestricted
Flow direction		see symbols
Operating pressure range	bar	... 250 in P, A and B; ... 160 in T
Adjustment ranges	bar	code 25 = ... 250 code 16 = ... 160 code 10 = ... 100 code 04 = ... 040 code 02 = ... 020
Flow rate, Q max.	l/min	25
Fluids		HL and HLP hydraulic oils to DIN 51 524; for other fluids, please consult BUCHER
Fluid temperature range	°C	-25 ... +80
Ambient temperature	°C	-25 ... +80

Viscosity range	mm^2/s (cSt)	10 ... 650, recommended 15 ... 250
Minimum fluid cleanliness level		18/14 to ISO 4406 / CETOP RP70H; 8 ... 9 to NAS 1638

4. Performance graphs

Measured with oil viscosity 33 mm^2/s (cSt)

SDDA-..-S-4-25
Δp-Q characteristic

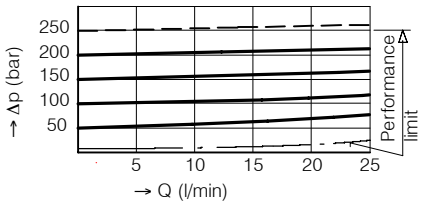

SDDA-..-S-4-16
Δp-Q characteristic

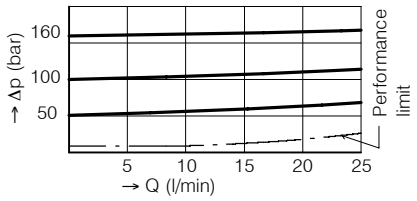

Rate of pressure change when turning the adjusting screw:

SDDA-..S-4-25: 1 turn	≙ app. 45 bar
SDDA-..S-4-16: 1 turn	≙ app. 30 bar
SDDA-..S-4-10: 1 turn	≙ app. 18 bar
SDDA-..S-4-04: 1 turn	≙ app. 6 bar
SDDA-..S-4-02: 1 turn	≙ app. 2,5 bar

SDDA-..-S-4-10
Δp-Q characteristic

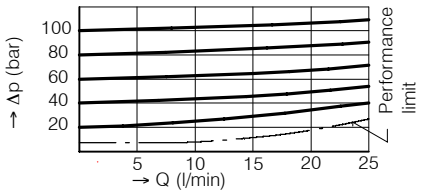

SDDA-..-S-4-04
Δp-Q characteristic

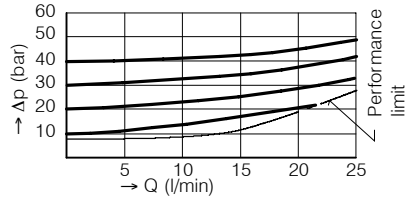

SDDA-..-S-4-02
Δp-Q characteristic

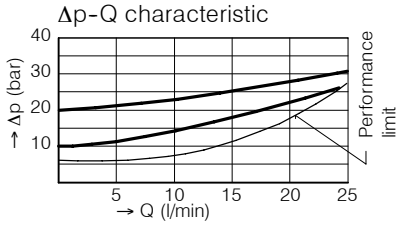

5. Dimensions

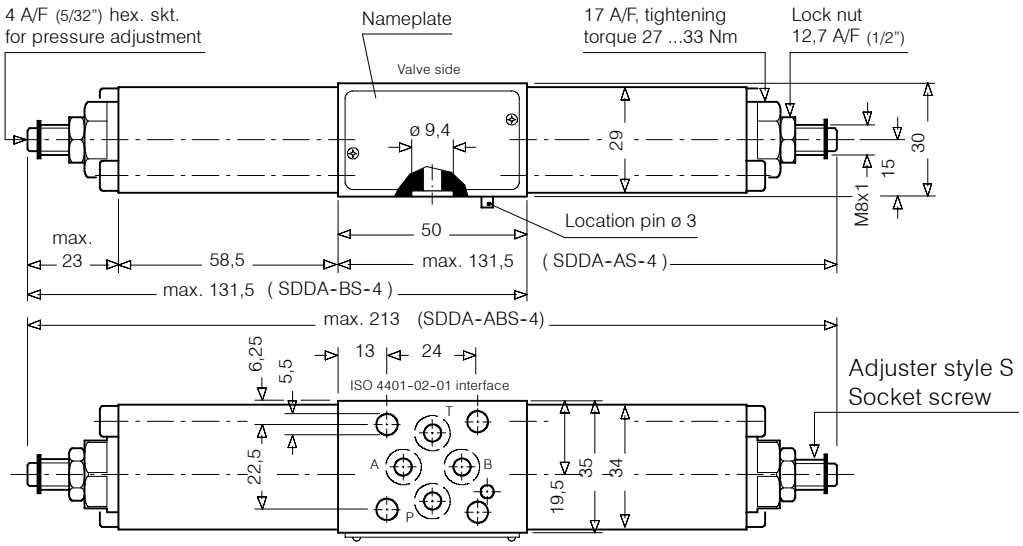

Adjuster styles / OPTIONAL
Conversion kit for styles S, H and Z5 - see related data sheets

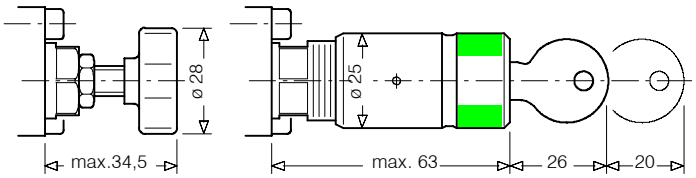

Adjuster style H
Hand knob

Adjuster style Z5, lockable hand type 2H.
Complies with Volkswagen factory specification BV 1.09

6. Schematic section

showing the relevant ports

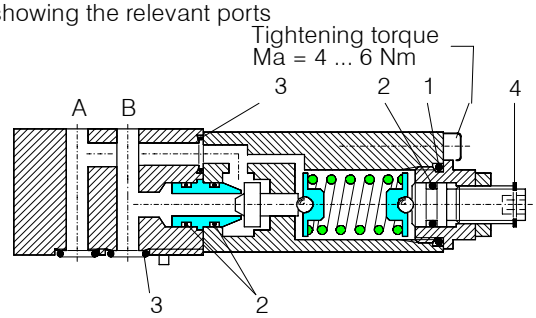

Seal kit no. DS-212, comprising *):

Itm.	Qty.	Qty.	Description	Size
1	2*)	1	O-ring no. 016	∅ 15,60 X 1,78 N90
2	6*)	3	O-ring no. 009	∅ 5,28 x 1,78 N90
3	6*)	5	O-ring no. 010	∅ 6,07 x 1,78 N90
4	2*)	1	Snap ring	Type SS ∅ 7

SDDA-AS/BS-4
SDDA-ABS-4

7. Installation and servicing

All installation and servicing must be carried out with care, and by qualified personnel only. At installation, be sure to mount the valve the correct way up. Do not confuse the flat surface (directional valve side) and the surface with O-ring counterbores (actuator side). When changing seals, the new seals should be thoroughly oiled or greased before fitting them to the valve. Use the correct tightening torques when fitting the threaded housing and cap screws.

8. Ordering code

Ex. S D D A - AB S - 4 - 25 - S - _ - 1

S = stacking valve
D = pressure relief function
D = direct acting
A ... Q = standard model per current data sheet
Z ... R = special features by arrangement
A = relief function A to B
B = relief function B to A
AB = relief function A to B and B to A
S = anti-shock, cross-line function
4 = ISO 4401-02-02 interface
25 = pressure range ... 250 bar
16 = pressure range ... 160 bar
10 = pressure range ... 100 bar
04 = pressure range ... 40 bar
02 = pressure range ... 20 bar
S = with hex. skt. screw adjuster (standard)
H = with hand knob adjuster type H
Z = with lockable hand knob adjuster type Z5
(Blank) = Nitrile seals (standard)
Z = Viton seals
For special seals, please consult BUCHER
1 ... 9 = design number (omit when ordering)

9. Related data sheets

Old no.	New no.	
i - 17.00	400-P-015101-E	Procedure for changing the Adjuster Style
i - 30	400-P-030101-E	ISO 4401-02-01 interface

info.ch@bucherhydraulics.com www.bucherhydraulics.com

© 2015 by Bucher Hydraulics AG Frutigen, CH-3714 Frutigen
All rights reserved.
Data is provided for the purpose of product description only, and must not be construed as warranted characteristics in the legal sense. The information does not relieve users from the duty of conducting their own evaluations and tests. Because the products are subject to continual improvement, we reserve the right to amend the product specifications contained in this catalogue.

BUCHER hydraulics

WWW.SUMY.IR

Stacking Cross-Line Relief Valve, size 3
Direct Acting Seat Valve Design
Series SDDB-...S ...

- 80 l/min, 350 bar
- With direct acting, zero leakage, 10 mm pressure relief cartridge DDPB-1C-10 ...
- 350 bar, 80 l/min on all ports
- In single cartridge versions (symbols 1 and 2) a cavity blanking plug is inserted in the opposite end
- ISO 4401 / CETOP R35H size 3, NFPA D03, DIN 24 340 A6 interface

1. Description

Series SDDB-...S-6 stack valves protect A and/or B against pressure peaks, relieving such peaks to B and/or A ('cross-line'). They are equipped with the direct acting pressure relief cartridge type DDPB-1C-10... .
The valves have a fast response, close with virtually zero leakage and are rated for the full ISO size 3 flow rate. The screw-in design of the cartridge valve provides for straight-forward, trouble-free maintenance. Interface sealing is by means of O-rings which are retained in counterbores in the valve body.

2. Symbols

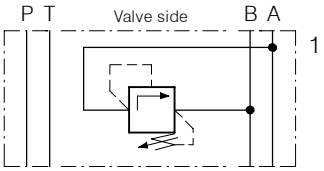

SDDB-AS-6 ...

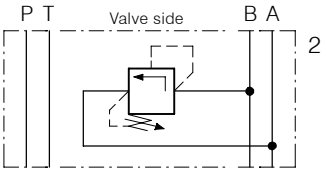

SDDB-BS-6 ...

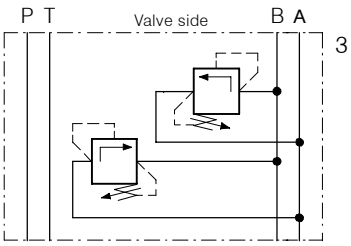

SDDB-ABS-6 ...

3. Characteristics

Type		stacking cross-line relief valve
Design		direct acting, seat type
Mounting method		stack mounting
Size		ISO 4401 size 3 interface
Mass	kg	SDDB-AS / -BS-6 = 2,17; SDDB-ABS-6 = 2,40
Mounting attitude		unrestricted
Flow direction		see symbols
Operating pressure in P, A, B and T	bar	350
Adjustment ranges	bar	pressure range N = 180 ... 350 pressure range M = 080 ... 240 pressure range L = 010 ... 100
Flow rate Qmax	l/min	80, see performance limits
Fluids		Hydraulic oils HL and HLP to DIN 51 524, other fluids contact BUCHER
Fluid temperature range	°C	-25 ... + 80
Ambient temperature	°C	-25 ... + 80
Viscosity range	cSt	10 ... 650, recommended 15 ... 250
Minimum fluid cleanless		18/14 to ISO 4406 /CETOP RP70H 8 ... 9 to NAS 1638

4. Performance graphs

Oil viscosity 33 cSt

SDDB-..S-6-SN

Δp-Q characteristics A ⇒ B (B ⇒ A)

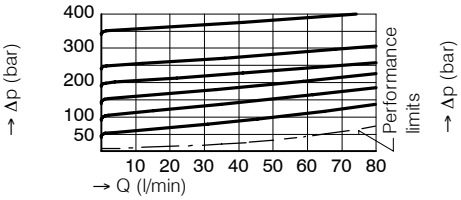

SDDB-..S-6-SM

Δp-Q charact. A ⇒ B (B ⇒ A)

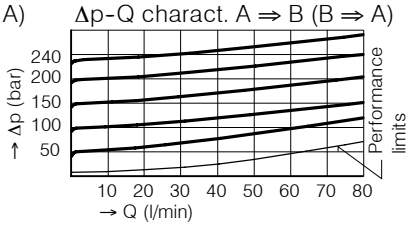

SDDB-..S-6-SL

Δp-Q charact. A ⇒ B (B ⇒ A)

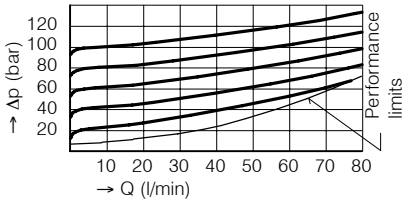

5. Dimensions

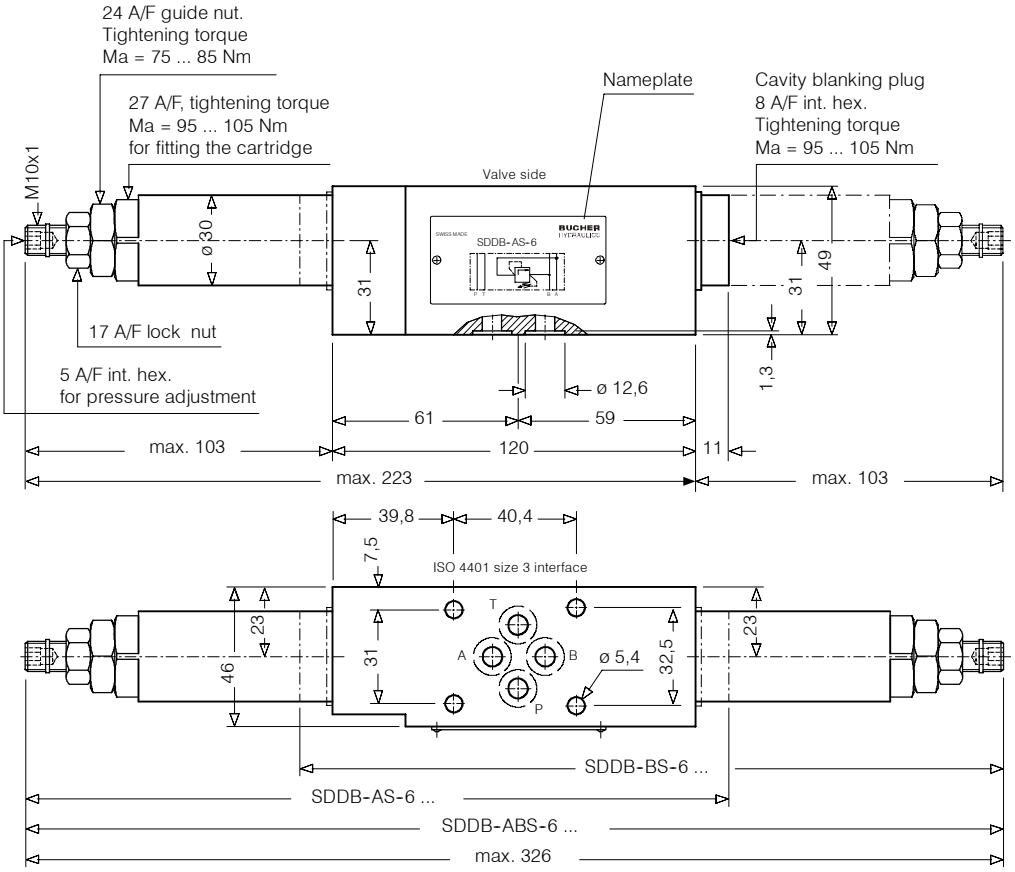

6. Schematic section

showing the relevant ports
Ex. SDDB-AS-6 ...

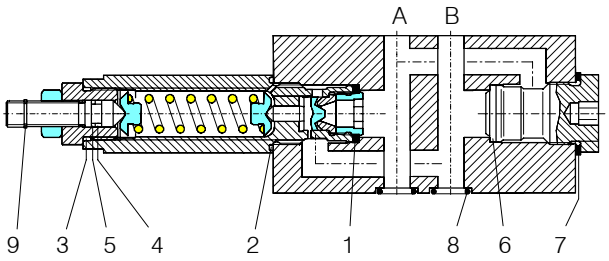

Seal kit no. DS-257, comprising:

Itm.	Qty.	Qty.	Description	Size
1	1	2	Seal	∅ 22.1/16.1x2.5
2	1	2	O-ring no. 021	∅ 23.52x1.78 N90
3	1	2	O-ring no. 017	∅ 17.17x1.78 N90
4	1	2	O-ring no. 011	∅ 7.65x1.78 N90
5	1	2	Backup ring	∅ 6,1X1,45X1,4
6	1	-	Usit-Ring	∅ 24.7/32x2
7	4	4	O-ring no. 012	∅ 9.25x1.78 N90
8	1	2	Snap ring	∅ 9 Typ SS

SDDB-ABS-6 ...
SDDB-AS-6.../SDDB-BS-6...

7. Installation and servicing

All installation and servicing must be carried out with care, and by qualified personnel only. At installation, be sure to mount the valve with the correct faces contacting the adjacent units and with all interface connections lining up properly. When changing seals, the new seals should be thoroughly oiled or greased before fitting them to the valve. Use the correct tightening torques when fitting the cartridge, guide nut and cavity blanking plug.

8. Model code key

Ex. S D D B - A S - 6 - S N _

S = stacking valve
D = pressure function
D = direct acting
A ... Q = standard model per current data sheet
Z ... R = special features by arrangement
A = function from A to B
B = function from B to A
AB = function from A to B and from B to A
S = cross-line function
6 = ISO 4401 size 3 interface
S = with hex. skt. screw adjuster
N = pressure range 180 ... 350 bar
M = pressure range 80 ... 240 bar
L = pressure range 10 ... 100 bar
(blank) = Nitrile seals (standard)
V = Viton seals
special seals by arrangement

9. Related data sheets

Old no.	New no.	
i-00	400-P-010101-E	Table of interface equivalents
i-31	400-P-030501-E	DIN 24 340 size A6 interface
D-3.31	400-P-270101-E	Direct acting pressure relief cartridge, 10 mm, series DDPB-1C-10 ...

info.ch@bucherhydraulics.com www.bucherhydraulics.com

© 2015 by Bucher Hydraulics AG Frutigen, CH-3714 Frutigen
All rights reserved.
Data is provided for the purpose of product description only, and must not be construed as warranted characteristics in the legal sense. The information does not relieve users from the duty of conducting their own evaluations and tests. Because the products are subject to continual improvement, we reserve the right to amend the product specifications contained in this catalogue.

BUCHER hydraulics

WWW.SUMY.IR

Stacking Cross-Line Relief Valve, size 3
Seated Pilot Stage, Spool-type Main Stage
Series SDVB- ...S ...

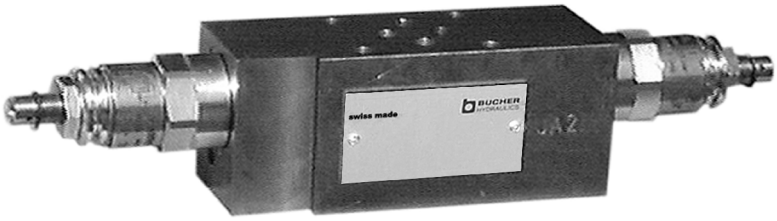

- 80 l/min, 315 bar
- with two-stage 10 mm pressure relief cartridge DVPA-1-10...
- 315 bar, 80 l/min on all ports
- In single cartridge versions (symbols 1 and 2) a cavity blanking plug is inserted in the opposite side
- Optionally available with hand knob, or lockable hand knob, adjuster
- Also available with solenoid controlled two-pressure cartridge WUVPB-1 ...-10
- ISO 4401 CETOP RP35H size 3, NFPA D03, DIN 24 340 A6 interface

1. Description

The valves protect A and/or B against pressure peaks, relieving such peaks to B and/or A ('cross-line'). They are equipped with the two-stage pressure relief cartridge type DVPA-1-10... as shown on data sheet D-4.31. When closed, the valves shut off the relief path with spool-type leakage (see performance data) and they are rated for the full ISO size 3 flow rate. The screw-in design of the cartridge valve provides for straight-forward, trouble-free maintenance. Interface sealing is by means of O-rings which are retained in counter-bores in the valve body.

2. Symbols

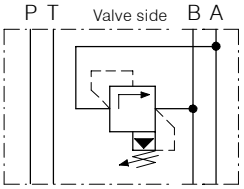

1

SDVB-AS-6 ...

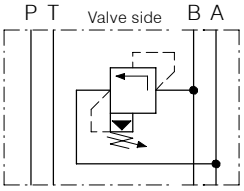

2

SDVB-BS-6 ...

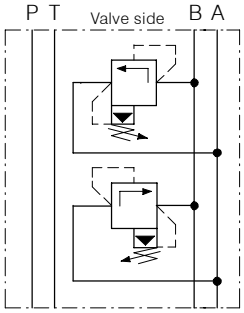

3

SDVB-ABS-6 ...

3. Characteristics

Type		stacking cross-line relief valve
Design		two-stage, sliding spool
Mounting method		stack mounting
Size		ISO 4401 size 3 interface
Mass	kg	SDVB-AS / -BS-6 = 2,05; SDVB-ABS-6 = 2,15
Mounting attitude		unrestricted
Flow direction		see symbols
Operating pressure in P, A, B and T	bar	315
Adjustment ranges	bar	pressure range N = 010 ... 315 pressure range M = 010 ... 210 pressure range L = 010 ... 065
Flow rate Qmax	l/min	80, see performance limits
Fluids		Hydraulic oils HL and HLP to DIN 51 524, other fluids contact BUCHER
Fluid temperature range	°C	-25 ... + 80
Ambient temperature	°C	-25 ... + 80

Viscosity range	cSt	10 ... 650, recommended 15 ... 250
Minimum fluid cleanless		18/14 to ISO 4406 /CETOP RP70H 8 ... 9 to NAS 1638

4. Performance graphs

Oil viscosity 33 cSt

SDVB-ABS (-AS, -BS) -6-..N
Δp-Q characteristics A ⇒ B, B ⇒ A

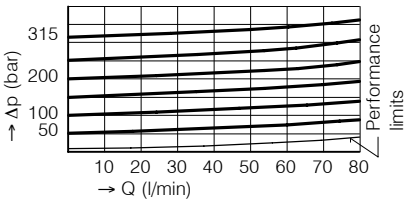

SDVB-ABS (-AS, -BS) -6-..M
Δp-Q characteristics A ⇒ B, B ⇒ A

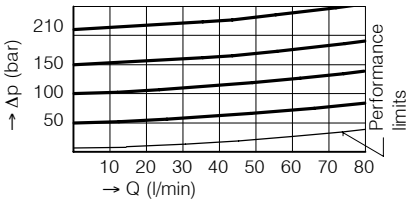

SDVB-ABS (-AS, -BS) -6-..L
Δp-Q characteristics A ⇒ B, B ⇒ A

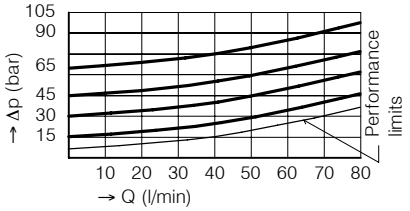

Leakage A ⇒ B, B ⇒ A

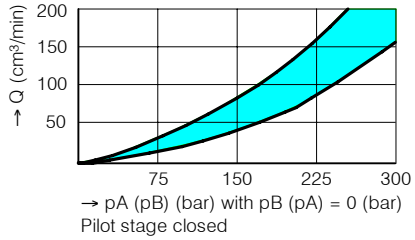

Rate of pressure change
when turning the adjusting screw:

SDVB-..-6-..N: 1 turn	≙	approx. 60 (bar)
SDVB-..-6-..M: 1 turn	≙	approx. 38 (bar)
SDVB-..-6-..L: 1 turn	≙	approx. 13 (bar)

5. Dimensions

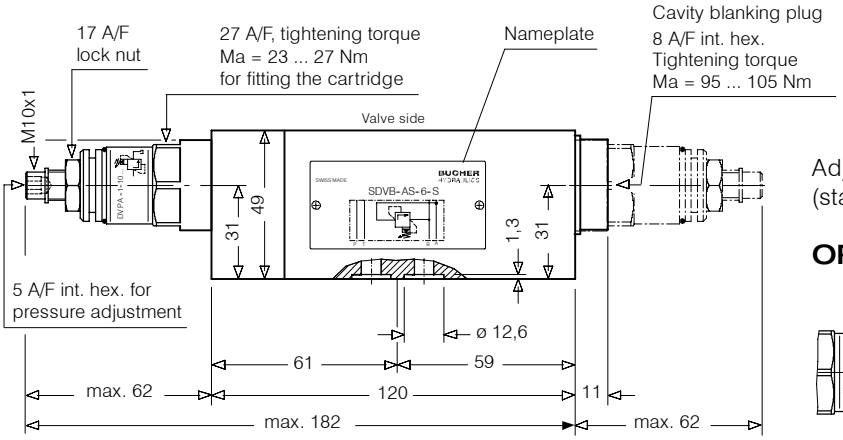

Adjuster style S
(standard)

OPTIONS

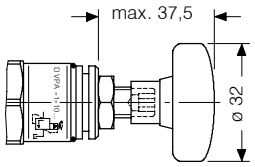

Adjuster style H
Hand knob (can be fittet later by user)

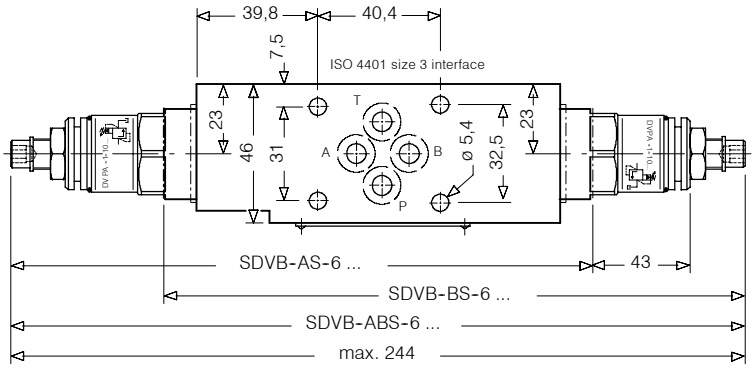

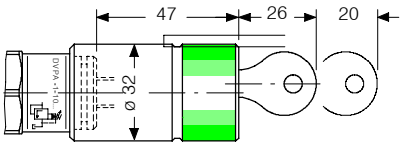

Adjuster style Z4
Lockable hand knob type 2H complies with Volkswagen Factory Sprcification BV 1.09 (factory option only)

6. Schematic section

showing the relevant ports
Ex. SDVB-AS-6 ...

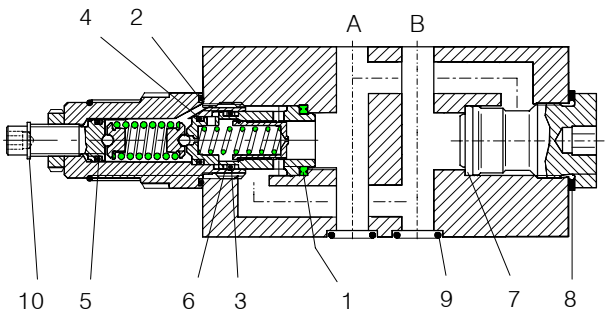

Seal kit no. DS-259, comprising:

Itm.	Qty.	Qty.	Description	Size
1	1	2	Seal	∅ 22.1/16.5x2.5
2	1	2	O-ring no. 021	∅ 23.52x1.78 N90
3	1	2	O-ring	∅ 14.00x2.00 N90
4	1	2	O-ring no. 013	∅ 10.82x1.78 N90
5	1	2	O-ring n. 012	∅ 9.25x1.78 N90
6	2	4	Backup ring	∅ 13,7X1,4X1,15
7	1	-	Usit-Ring	∅ 24.7/32,0x2,0
8	4	4	O-ring no. 012	∅ 9.25x1.78 N90
9	1	2	Snap ring	∅ 9 Typ SS

SDVB-ABS-6 ...
SDVB-AS-6.../SDVB-BS-6...

7. Installation and servicing

All installation and servicing must be carried out with care, and by qualified personnel only. At installation, be sure to mount the valve with the correct faces contacting the adjacent units and with all interface connections lining up properly. When changing seals, the new seals should be thoroughly oiled or greased before fitting them to the valve. Use the correct tightening torques when fitting the cartridge and cavity blanking plugs.

8. Model code key

Ex. S D V B - A S - 6 - S N _

S = stacking valve
D = pressure function
V = two-stage
A ... Q = standard model per current data sheet
Z ... R = special features by arrangement
A = function from A to B
B = function from B to A
AB = function from A to B and from B to A
S = cross-line function
6 = ISO 4401 size 3 interface
S = with hex. skt. screw adjuster (standard)
H = with hand knob adjuster
Z = with lockable hand knob adjuster type Z4
N = pressure range 10 ... 315 bar
M = pressure range 10 ... 210 bar
L = pressure range 10 ... 65 bar
(blank) = Nitrile seals (standard)
V = Viton seals
For special seals, contact BUCHER

9. Related data sheets

Old no.	New no.	
i-00	400-P-010101-E	Table of interface equivalents
i-31	400-P-030501-E	DIN 24 340 size A6 interface
D-4.31	400-P-280101-E	Two-stage pressure relief cartridge, 10 mm, series DVPA-1-10 ...

info.ch@bucherhydraulics.com www.bucherhydraulics.com

© 2015 by Bucher Hydraulics AG Frutigen, CH-3714 Frutigen
All rights reserved.
Data is provided for the purpose of product description only, and must not be construed as warranted characteristics in the legal sense. The information does not relieve users from the duty of conducting their own evaluations and tests. Because the products are subject to continual improvement, we reserve the right to amend the product specifications contained in this catalogue.

BUCHER hydraulics
WWW.SUMY.IR

Stacking Cross-Line Relief Valve, size 5
Direct Acting Seat Valve Design
Series SDDB-..S ...

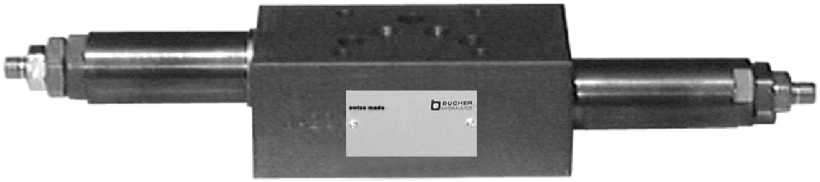

- 350 bar, 100 l/min
- With direct acting, zero leakage, 10 mm pressure relief cartridge DDPB-1C-10 ...
- 350 bar, 100 l/min on all ports
- In single cartridge versions (symbols 1 and 2) a cavity blanking plug is inserted in the opposite end
- ISO 4401 / CETOP R35H size 5, NFPA D05, DIN 24 340 A10 interface

1. Description

Series SDDB-...S-10 stack valves protect A and/or B against pressure peaks, relieving such peaks to B and/or A ('cross-line'). They are equipped with the direct acting pressure relief cartridge type DDPB-1C-10... . The valves have a fast response, close with virtually zero leakage and are rated for the full ISO size 5 flow rate. The screw-in design of the cartridge valve provides for straight-forward, trouble-free maintenance. Interface sealing is by means of O-rings which are retained in counterbores in the valve body.

2. Symbols

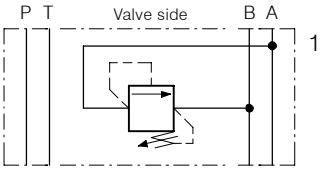

SDDB-AS-10 ...

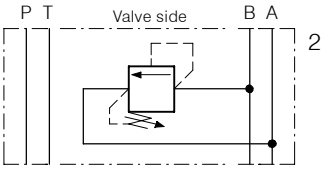

SDDB-BS-10 ...

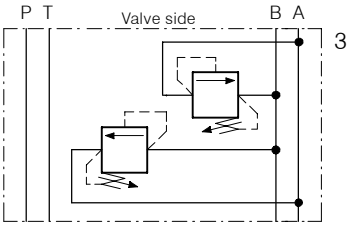

SDDB-ABS-10 ...

3. Main characteristics

Designation		stacking cross-line relief valve
Design		direct acting, seat type
Mounting method		stack mounting
Size		ISO 4401 size 5 interface
Weight	kg	SDDB-AS / -BS-6 = 2,17 SDDB-ABS-6 = 2,40
Mounting attitude		unrestricted
Flow direction		see symbols
Operating pressure range	bar	... 350 in P, A, B and T
Adjustment ranges	bar	pressure range N = 180 ... 350 pressure range M = 080 ... 240 pressure range L = 010 ... 100
Flow rate, Qmax	l/min	100, see performance limits
Fluids		HL and HLP hydraulic oils to DIN 51 524; for other fluids, please consult BUCHER
Fluid temperature range	°C	-25 ... +80
Ambient temperature	°C	-25 ... +80
Viscosity range	mm^2/s (cSt)	10 ... 650, recommended 15 ... 250
Minimum fluid cleanliness level		18/14 to ISO 4406 / CETOP RP70H; 8 ... 9 to NAS 1638

4. Performance graphs

Measured with oil viscosity 33 mm^2/s (cSt)

SDDB-..S-10-..N
Δp-Q characteristics A→B (B→A)

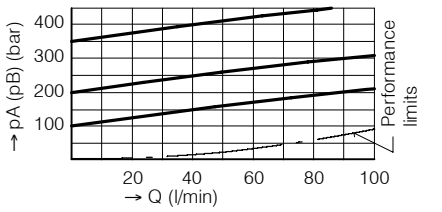

SDDB-..S-10-..M
Δp-Q characteristics A→B (B→A)

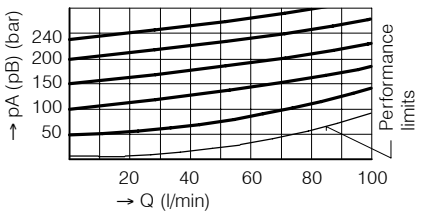

SDDB-..S-10-..L
Δp-Q characteristics A→B (B→A)

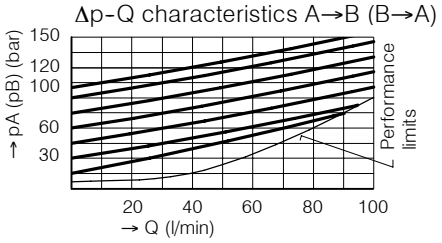

5. Dimensions

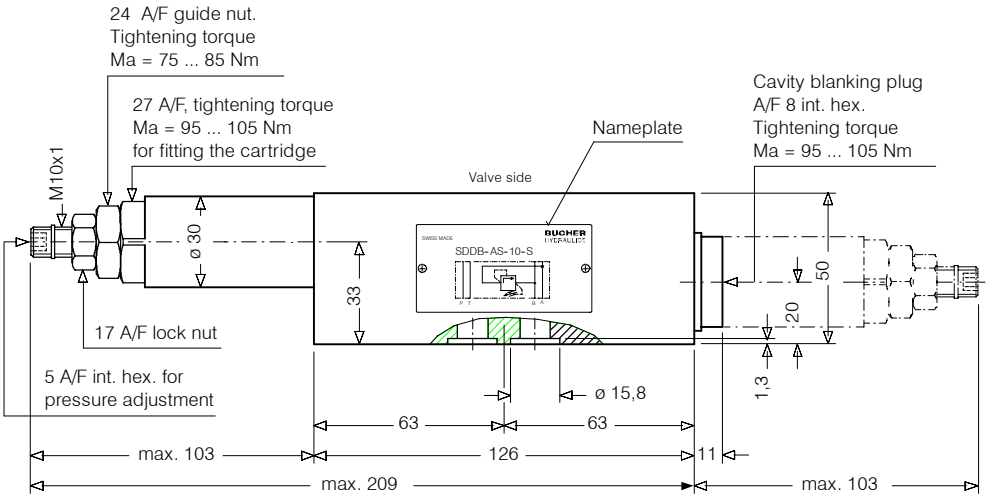

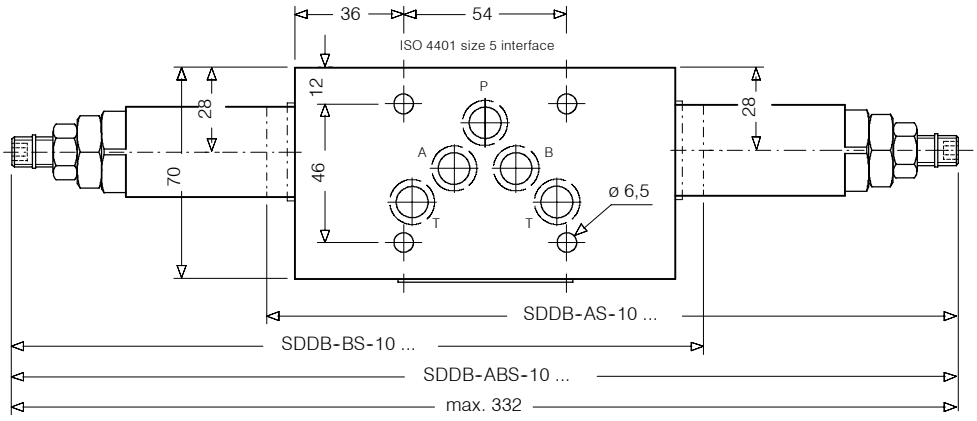

6. Schematic section

showing the relevant ports
Ex. SDDB-BS-10 ...

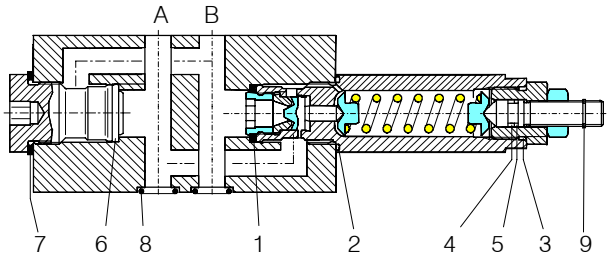

Seal kit no. DS-223, comprising *):

Itm.	Qty.	Qty.	Description	Size
1	1	2*)	Seal	∅ 22,1 x 16,1 x 2,5
2	1	2*)	O-ring no. 021	∅ 23,52 x 1,78 N90
3	1	2*)	O-ring no. 017	∅ 17,17 x 1,78 N90
4	1	2*)	O-ring no. 011	∅ 7,65 x 1,78 N90
5	1	2*)	Backup ring	∅ 6,1/1,45x1,4 FI0751
6	1*)	-	Seal T 114	
7	1*)	-	Usit-ring	∅ 24,7 / 32 x 2
8	5	5*)	O-ring no. 014	∅ 12,42 x 1,78 N90
9	1	2*)	Snap ring	∅ 9 type SS

SDDB-ABS-10 ...
SDDB-AS / BS-10 ...

7. Installation and servicing

All installation and servicing must be carried out with care, and by qualified personnel only. At installation, be sure to mount the valve with the correct faces contacting the adjacent units and with all interface connections lining up properly. When changing seals, the new seals should be thoroughly oiled or greased before fitting them to the valve. Use the correct tightening torques when fitting the cartridge, guide nut and cavity blanking plug.

8. Ordering code

Ex. S D D B - A S - 10 - S N _

S = stacking valve
D = pressure function
D = direct acting
A ... Q = standard model per current data sheet
Z ... R = special features by arrangement
A = function from A to B
B = function from B to A
AB = function from A to B and from B to A
S = cross-line function
10 = ISO 4401 size 5 interface
S = with hex. skt. screw adjuster
N = pressure range 180 ... 350 bar
M = pressure range 80 ... 240 bar
L = pressure range 10 ... 100 bar
(blank) = Nitrile seals (standard)
V = Viton seals
Special seals by arrangement

9. Related data sheets

Old no.	New no.	
i-00	400-P-010101-E	Table of interface equivalents
i-41	400-P-050101-E	DIN 24 340 size A10 interface
D-3.31A	400-P-270101-E	Direct acting pressure relief cartridge, 10 mm, series DDPB-1C-10 ...

info.ch@bucherhydraulics.com www.bucherhydraulics.com

© 2015 by Bucher Hydraulics AG Frutigen, CH-3714 Frutigen
All rights reserved.
Data is provided for the purpose of product description only, and must not be construed as warranted characteristics in the legal sense. The information does not relieve users from the duty of conducting their own evaluations and tests. Because the products are subject to continual improvement, we reserve the right to amend the product specifications contained in this catalogue.

BUCHER
hydraulics
WWW.SUMY.IR

D - 30.12

Stacking Hydrostat, ISO size 3
Bypass Function, Direct Acting

Series SDWDPB-2D ...

30 l/min, 315 bar

- Interface to ISO 4401 / CETOP R35H size 03 NFPA D03 / DIN 24 340 A6
- Hydrostat spring adjustable from 7 ... 15 bar
- With integral damping orifice in Z line
- With integral shuttle valve between A and B
- Good corrosion protection, stainless steel adjusting screw
- Option: with LS signal port on the mounting interface

SYMBOLS

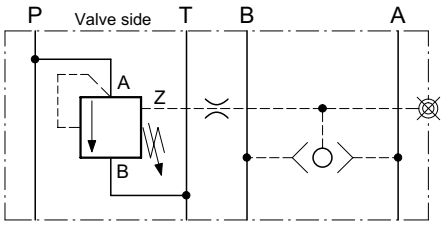

SDWDPB-2D-PT-L-6 ...

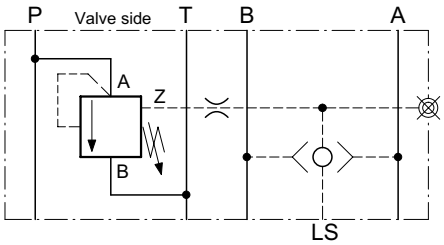

Optionally available with LS signal port on the mounting interface

DIMENSIONS

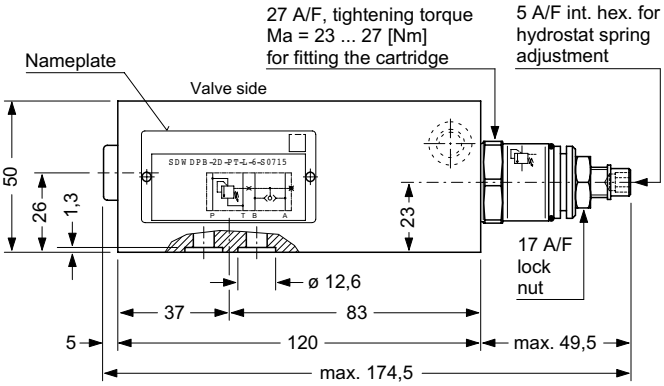

Adjuster style
S
(standard)

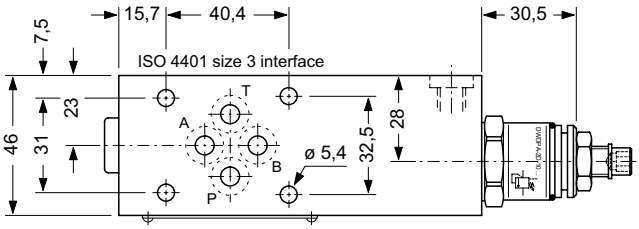

OPTIONS

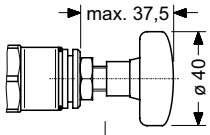

Adjuster style **H**
Hand knob
(can be fitted by user)

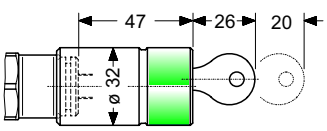

Adjuster style **Z4**
Lockable hand knob type 2H
complies with Volkswagen
Factory Specification BV 1.09
(factory option only)

DESCRIPTION

Series SDWDPB ...-6 stack valves have a P-to-T hydrostat function and are applied as bypass hydrostats, adjustable from 7 ... 15 bar, in hydraulic circuits.

The adjustment feature permits on-site optimisation of the system without the need to replace components which have different flow ranges (e.g. proportional valves).

The orifice which is essential to ensure oscillation-free operation is already incorporated in the Z port of the cartridge.

The integral shuttle valve signals the higher of the load pressures in A or B back to the hydrostat, which in turn maintains the pressure in P at a level which is higher still by the amount of the hydrostat spring setting.

In conjunction with an orifice or proportional valve located in the downstream P-to-A or P-to-B lines, the overall result produces the benefits of a 3-way flow control function (see the application example on page 3).

WWW.SUMY.IR

SCHEMATIC SECTION

showing the relevant ports

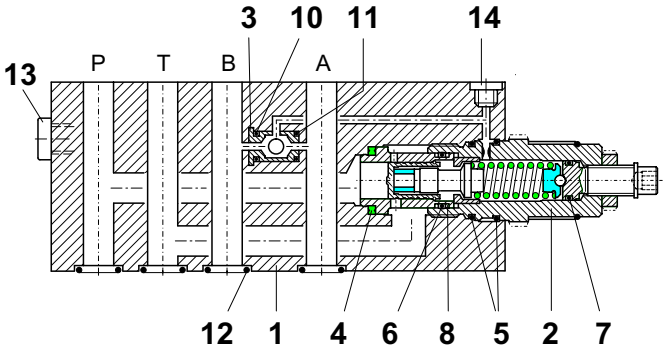

INSTALLATION AND SERVICING

MUST BE CARRIED OUT WITH CARE, AND BY QUALIFIED PERSONNEL ONLY.

At installation, be sure to mount the valve with the correct faces contacting the adjacent units and with all interface connections lining up properly.

When changing seals, the new seals should be thoroughly oiled or greased before fitting them to the valve.

Use the correct tightening torques when fitting the cartridge.

NOTE - before removing the cartridge, fully decompress the hydrostat spring by turning back the adjusting screw. If the hydrostat spring is compressed while the cartridge is removed, the cartridge neck will be pushed out of the cartridge head.

COMPONENTS / SERVICE PARTS

*) = part of seal kit no. DS-267
◢ = available as service part

It.	Qty.	Description		
1	1	Stacking body	50 x 46 x 120	type L-06
2 ◢	1	Hydrostat cartridge	type DWDPA-2D-10 ...	
3 ◢	1	Shuttle valve	type RW-2,5	
◢	1	Seal kit no. DS-267, comprising *):		
4	1*)	Seal	ø 22,1 / 16,5 x 2,5	
5	2*)	O-ring no. 020	ø 21,95 x 1,78	N90
6	1*)	O-ring	ø 14,00 x 2,00	N90
7	1*)	O-ring no. 012	ø 9,25 x 1,78	N90
8	2*)	Backup ring	ø 18 / 15,2 x 1,2	
9				
10	1*)	O-ring	ø 5,50 x 1,50	N90
11	1*)	O-ring	ø 4,00 x 1,50	N90
12	4*)	O-ring no. 012	ø 9,25 x 1,78	N90
13	1*)	Plug screw	G 1/4"	ED VSTI
14	1*)	Plug screw	G 1/8"	ED VSTI

TO ORDER SERVICE PARTS, STATE:

- complete unit model code from the nameplate, including the design number
- data sheet number, including issue date
- part item number from above list
- part description from above list
- quantity required

MAIN CHARACTERISTICS

Type	stacking bypass hydrostat
Design	direct acting, sliding spool type
Mounting method	stack mounting
Size	ISO 4401 size 03 interface nominal 6 mm
Mass	1,95 kg
Mounting attitude	unrestricted
Flow direction	see symbol
Operating pressure	... 315 bar in P, A, B and T
Hydrostat spring	adjustable 7 ... 15 bar
Fluids	hydraulic oils HL and HLP to DIN 51 524 other fluids by arrangement
Min. fluid cleanliness	18/14 to ISO 4406 / CETOP RP70H 8 ... 9 to NAS 1638
Fluid temperature range	-20° ... +60° C
Viscosity range	10 ... 300 cSt
Flow rate Q max.	... 30 l/min
Flow rate Q max. attainable at the actuator	... 30 l/min with spring Δp = 15 bar ... 20 l/min with spring Δp = 7 bar

PERFORMANCE DATA

Oil viscosity 33 cSt

Q - pL characteristic
at **maximum** hydrostat spring setting (15 bar)

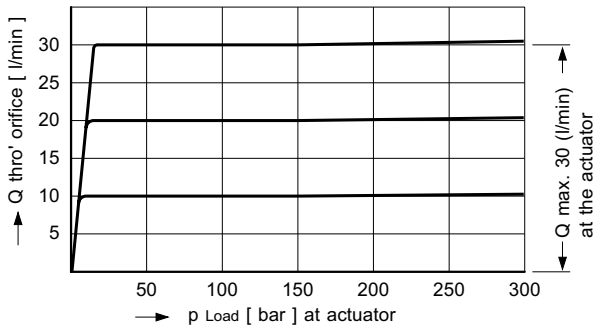

Q - pL characteristic
at **minimum** hydrostat spring setting (7 bar)

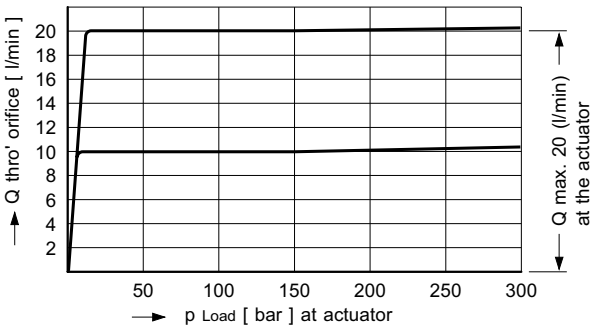

SUBJECT TO CHANGE WITHOUT NOTICE

WWW.SUMY.IR

MODEL CODE KEY

Ex. S D W D P B - 2 D - PT - L - 6 - S 0715 _ - 1

S	=	stacking valve
D	=	pressure function
W	=	hydrostat
D	=	direct acting
P	=	with cartridge valve
A ... Q	=	standard model per relevant data sheet
Z ... R	=	special features by arrangement
2	=	pressure control type 2
D	=	cavity type DD
PT	=	function from P to T
L	=	stacking body, code L
6	=	ISO 4401 size 3 interface, nominal 6 mm
S	=	with hex. skt. screw adjuster (standard)
H	=	with hand knob adjuster
Z	=	with lockable hand knob adjuster type Z4
0715	=	hydrostat spring 7 ... 15 bar (stepless adjustment)
(blank)	=	Nitrile seals (standard)
V	=	Viton seals
S	=	special seals by arrangement
1 ... 9	=	design number (omit when ordering new units)

RELATED DATA SHEETS

i - 31	DIN 24 340 A6 interface
D - 28.12	Hydrostat cartridge, series DWDPA-2D-10 ...
R - 32	Shuttle valve, series RW-2,5

APPLICATION EXAMPLE

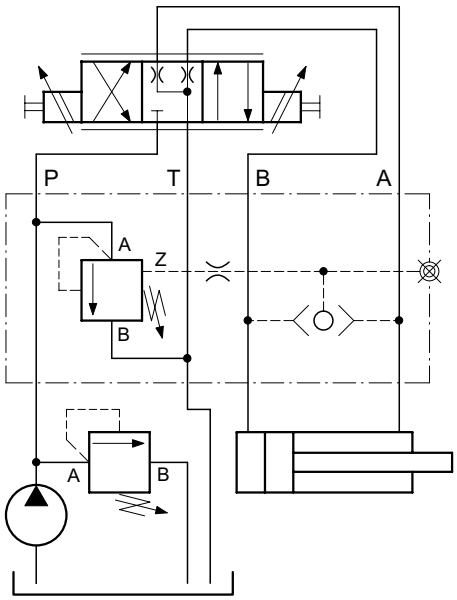

When combined with a downstream orifice or proportional valve, the bypass hydrostat provides a three-way flow control function, with its associated benefits.

These are:

- the maximum pressure in P is equal to the varying load pressure in A or B - whichever is the greater - plus the setting of the hydrostat spring. This means that any surplus oil is spilled off to tank at just above the load pressure, rather than at the main relief valve setting.
- the flow rate set by the orifice remains constant even as the load pressure fluctuates up or down
- if the control line Z is vented when the flow control orifice is closed, the hydrostat will unload the main flow circuit to tank.

Option with LS signal port

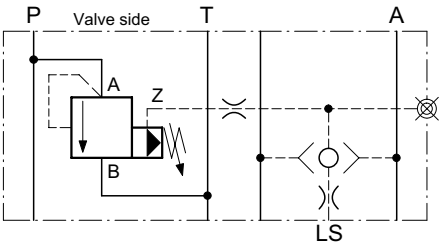

Function:

With this option it is possible to use the manifold block to signal the highest of the various load pressures in one or more stacking assemblies back to port Z of the hydrostat, thus avoiding the use of external pipework.

BUCHER HYDRAULICS
www.bucherhydraulics.com

Germany
Tel.: + 49 7742 8520
Fax: + 49 7742 7116
info.de@bucherhydraulics.com

France
Tel.: + 33 389 64 22 44
Fax: + 33 389 65 28 78
info.fr@bucherhydraulics.com

Netherlands
Tel.: + 31 7934 26 24 4
Fax: + 31 7934 26 28 8
info.nl@bucherhydraulics.com

UK
Tel.: + 44 2476 35 35 61
Fax: + 44 2476 35 35 72
info.uk@bucherhydraulics.com

USA
Tel.: + 1 262 605 82 80
Fax: + 1 262 605 82 78
info.wi@bucherhydraulics.com

Switzerland
Tel.: + 41 33 672 61 11
Fax: + 41 33 672 61 03
info.ch@bucherhydraulics.com

Italy
Tel.: + 39 0522 92 84 11
Fax: + 39 0522 51 32 11
info.it@bucherhydraulics.com

Austria
Tel.: + 43 6216 44 97
Fax: + 43 6216 44 97 4
info.at@bucherhydraulics.com

China
Tel.: + 86 10 68 31 41 08
Fax: + 86 10 68 31 41 21
info.bj@bucherhydraulics.com

Product Center (Elevator Hyd)
Tel.: + 41 41 757 03 33
Fax: + 41 41 757 05 00
info.nh@bucherhydraulics.com

Stacking Hydrostat, ISO size 5
Bypass Function
Two-stage

Series SDWVPB-2 ... / SDWVPZ-2 ...

55 l/min, 315 bar

- Interface to ISO 4401 / CETOP R35H size 05 NFPA D05 / DIN 24 340 A10
- Hydrostat with integral pressure relief function
- Hydrostat spring: SDWVPB-2 ... = 8 bar (fixed setting)
  SDWVPZ-2 ... = 5 bar (fixed setting)
- With integral damping orifice in Z line
- With integral shuttle valve between A and B
- Good corrosion protection, stainless steel adjusting screw
- Option: with solenoid controlled unloading function
- Option: with LS signal port on the mounting interface

DIMENSIONS

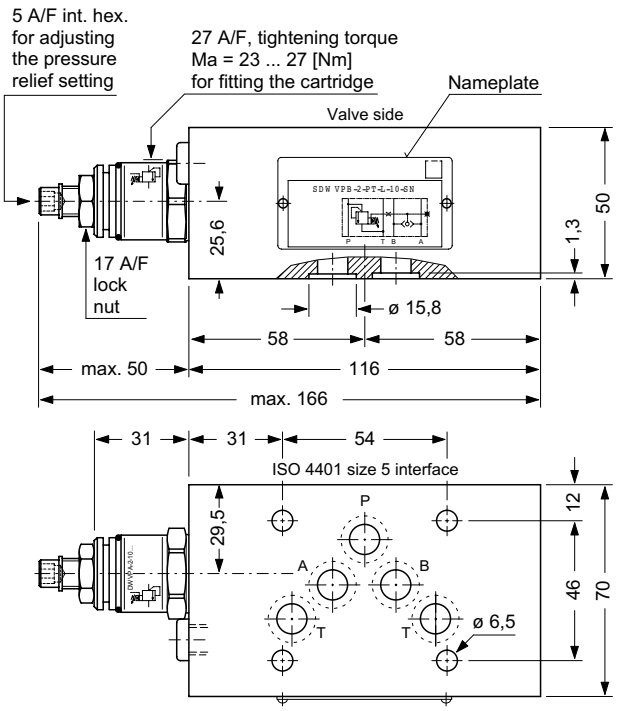

Adjuster style
S
(standard)

SYMBOL

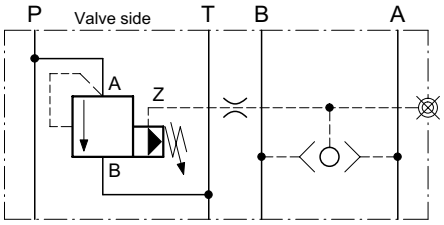

SDWVPB-2-PT-L-10 ...
SDWVPZ-2-PT-L-10 ...

OPTIONS

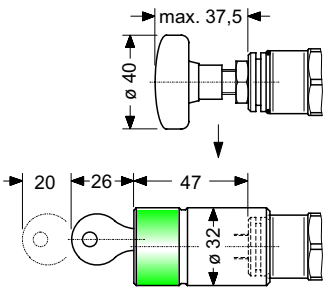

Adjuster style **H**
Hand knob
(can be fitted by user)

Adjuster style **Z4**
Lockable hand knob type 2H
complies with Volkswagen
Factory Specification BV 1.09
(factory option only)

DESCRIPTION

Series SDWVPB ...-10 and SDWVPZ ...-10 stack valves are applied in hydraulic circuits as bypass hydrostats with fixed spring settings options of 8 bar or 5 bar. They feature an integral pressure relief function.

The pressure relief setting should be at least 10% higher than the maximum dynamic load which can occur at the actuator.

The orifice which is essential to ensure oscillation-free operation is already incorporated in the Z port of the cartridge.

The integral shuttle valve signals the higher of the load pressures in A or B back to the hydrostat, which in turn maintains the pressure in P at a level which is higher still by the amount of the hydrostat spring setting.

In conjunction with an orifice or proportional valve located in the downstream P-to-A or P-to-B lines, the overall result produces the benefits of a 3-way flow control function with integral pressure relief (see the application example on page 3).

WWW.SUMY.IR

SCHEMATIC SECTION

showing the relevant ports

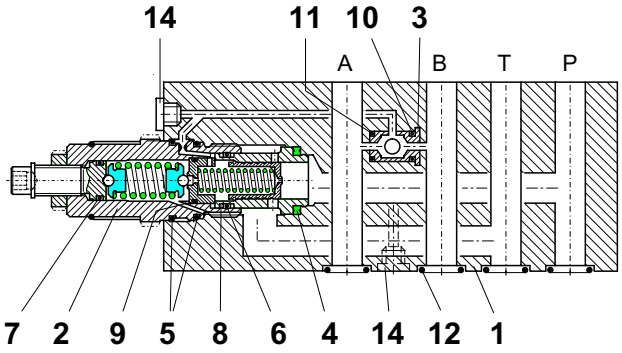

COMPONENTS / SERVICE PARTS

*) = part of seal kit no. DS-268
◢ = available as service part

It.	Qty.		Description		
1	1	1	Stacking body	50 x 70 x 116	type L-10
2	--	1	Hydrostat cartridge	type DWVPA-2-10 ...	
	1	--	Hydrostat cartridge	type DWVPZ-2-10 ...	
3 ◢	1	1	Shuttle valve	type RW-2,5	
	1	1	Seal kit no. DS-268, comprising *):		
4	1	1*)	Seal	ø 22,1 / 16,5 x 2,5	
5	2	2*)	O-ring no. 020	ø 21,95 x 1,78	N90
6	1	1*)	O-ring	ø 14,00 x 2,00	N90
7	1	1*)	O-ring no. 012	ø 9,25 x 1,78	N90
8	2	2*)	Backup ring	ø 18 / 15,2 x 1,2	
9	1	1*)	O-ring no. 013	ø 10,82 x 1,78	N90
10	--	1*)	O-ring	ø 5,50 x 1,50	N90
11	1	1*)	O-ring	ø 4,00 x 1,50	N90
12	5	5*)	O-ring no. 014	ø 14,12 x 1,78	N90
13					
14	2	2*)	Plug screw	G 1/8"	ED VSTI

SDWVPB-2-PT-L-10 ...
SDWVPZ-2-PT-L-10 ...

TO ORDER SERVICE PARTS, STATE:
- complete unit model code from the nameplate, including the design number
- data sheet number, including issue date
- part item number from above list
- part description from above list
- quantity required

INSTALLATION AND SERVICING

MUST BE CARRIED OUT WITH CARE, AND BY QUALIFIED PERSONNEL ONLY.

At installation, be sure to mount the valve with the correct faces contacting the adjacent units and with all interface connections lining up properly.

When changing seals, the new seals should be thoroughly oiled or greased before fitting them to the valve.

Use the correct tightening torques when fitting the cartridge.

NOTE - before removing the cartridge, fully decompress the hydrostat spring by turning back the adjusting screw. If the hydrostat spring is compressed while the cartridge is removed, the cartridge neck will be pushed out of the cartridge head.

MAIN CHARACTERISTICS

Type	stacking bypass hydrostat
Design	two-stage, seated pilot, sliding main spool type
Mounting method	stack mounting
Size	ISO 4401 size 05 interface nominal 10 mm
Mass	2,95 kg
Mounting attitude	unrestricted
Flow direction	see symbol
Operating pressure	... 315 bar in P, A, B and T
Hydrostat spring	SDWVPB ... = 8 bar fixed setting SDWVPZ ... = 5 bar fixed setting
Fluids	hydraulic oils HL and HLP to DIN 51 524 other fluids by arrangement
Min. fluid cleanliness	18/14 to ISO 4406 / CETOP RP70H 8 ... 9 to NAS 1638
Fluid temperature range	-20° ... +60° C
Viscosity range	10 ... 300 cSt
Flow rate Q max.	... 55 l/min
Flow rate Q max. attainable at the actuator	... 55 l/min with SDWVPB ... ... 45 l/min with SDWVPZ ...

PERFORMANCE DATA

Oil viscosity 33 cSt

Q - pL characteristic **SDWVPB-2-PT-L-10 ...**
with fixed hydrostat spring setting of 8 bar

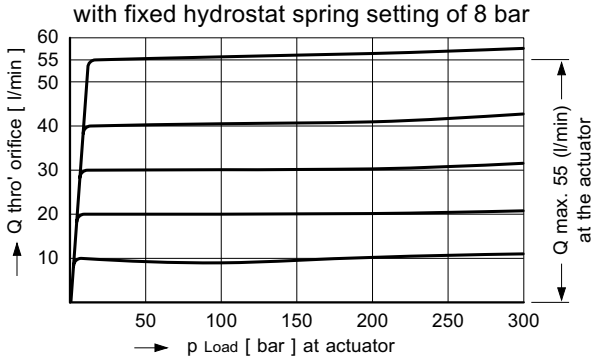

Q - pL characteristic **SDWVPZ-2-PT-L-10 ...**
with fixed hydrostat spring setting of 5 bar

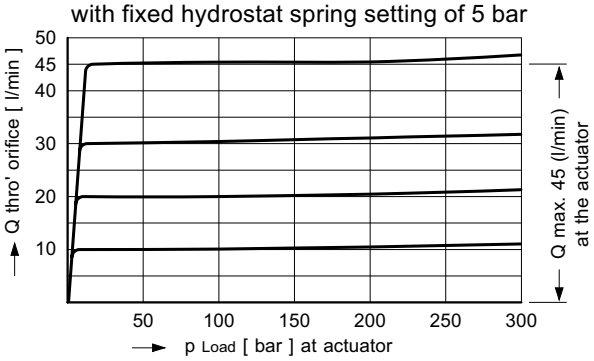

SUBJECT TO CHANGE WITHOUT NOTICE

WWW.SUMY.IR

MODEL CODE KEY

Ex. S D W V P B - 2 - PT - L - 10 - S N _ - 1

S = stacking valve
D = pressure function
W = hydrostat
V = two-stage
P = with cartridge valve
B = standard model with 8 bar hydrostat spring
C ... Q = standard model per relevant data sheet
Y ... R = special features by arrangement
Z = special feature - with 5 bar hydrostat spring
2 = pressure control type 2
PT = function from P to T
L = stacking body, code L
10 = ISO 4401 size 5 interface, nominal 10 mm
S = with hex. skt. screw adjuster (standard)
H = with hand knob adjuster
Z = with lockable hand knob adjuster type Z4
N = pressure range ... 315 bar
M = pressure range ... 210 bar
L = pressure range ... 65 bar
(blank) = Nitrile seals (standard)
V = Viton seals
S = special seals by arrangement
1 ... 9 = design number (omit when ordering new units)

RELATED DATA SHEETS

i - 41	DIN 24 340 A10 interface
D - 28.22	Hydrostat cartridge, series DWVPA-2-10 ... / DWVPZ-2-10 ...
R - 32	Shuttle valve, series RW-2,5

APPLICATION EXAMPLE

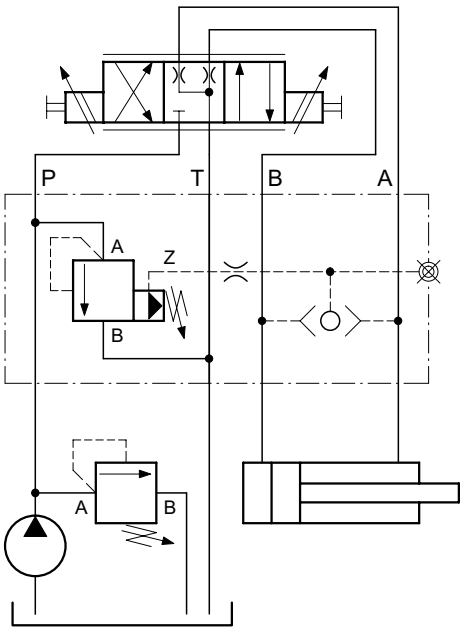

When combined with a downstream orifice or proportional valve, the bypass hydrostat provides a three-way flow control function with integral pressure relief, with its associated benefits.

These are:

- the maximum pressure in P is equal to the varying load pressure in A or B - whichever is the greater - plus the fixed setting of the hydrostat spring. This means that any surplus oil is spilled off to tank at just above the load pressure, rather than at the main relief valve setting.
- the flow rate set by the orifice remains constant even as the load pressure fluctuates up or down
- if the load pressure reaches the value set with the adjusting screw, the hydrostat functions as the primary relief valve
- if the control line Z is vented when the flow control orifice is closed, the hydrostat will unload the main flow circuit to tank.

Option with solenoid controlled unloading

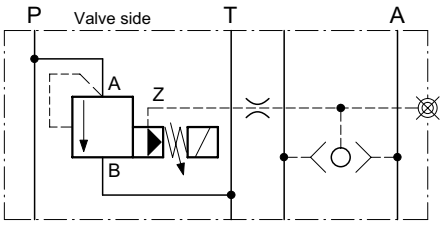

Function:

Very low levels of unloaded recirculating back pressure can be achieved by using a solenoid controlled bypass hydrostat.

The solenoid must be energised whenever any of the actuators is to be operated.

Option with LS signal port

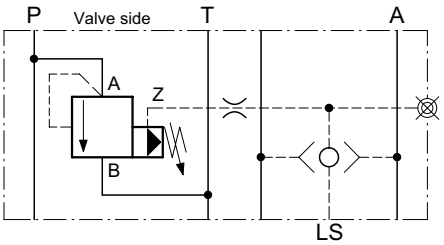

Function:

With this option it is possible to use the manifold block to signal the highest of the various load pressures in one or more stacking assemblies back to port Z of the hydrostat, thus avoiding the use of external pipework.

BUCHER HYDRAULICS
www.bucherhydraulics.com

Germany
Tel.: + 49 7742 8520
Fax: + 49 7742 7116
info.de@bucherhydraulics.com

France
Tel.: + 33 389 64 22 44
Fax: + 33 389 65 28 78
info.fr@bucherhydraulics.com

Netherlands
Tel.: + 31 7934 26 24 4
Fax: + 31 7934 26 28 8
info.nl@bucherhydraulics.com

UK
Tel.: + 44 2476 35 35 61
Fax: + 44 2476 35 35 72
info.uk@bucherhydraulics.com

USA
Tel.: + 1 262 605 82 80
Fax: + 1 262 605 82 78
info.wi@bucherhydraulics.com

Switzerland
Tel.: + 41 33 672 61 11
Fax: + 41 33 672 61 03
info.ch@bucherhydraulics.com

Italy
Tel.: + 39 0522 92 84 11
Fax: + 39 0522 51 32 11
info.it@bucherhydraulics.com

Austria
Tel.: + 43 6216 44 97
Fax: + 43 6216 44 97 4
info.at@bucherhydraulics.com

China
Tel.: + 86 10 68 31 41 08
Fax: + 86 10 68 31 41 21
info.bj@bucherhydraulics.com

Product Center (Elevator Hyd)
Tel.: + 41 41 757 03 33
Fax: + 41 41 757 05 00
info.nh@bucherhydraulics.com

BUCHER hydraulics

WWW.SUMY.IR

D - 31.55

Stacking Hydrostat, ISO size 5
Inline Function
Direct Acting

Series SDWDPB-5D ...

60 l/min, 315 bar

- Interface to ISO 4401 / CETOP R35H size 05 NFPA D05 / DIN 24 340 A10
- Hydrostat spring adjustable from 5 ... 15 bar
- With integral damping orifice in Z line
- With integral shuttle valve between A and B
- Good corrosion protection, stainless steel adjusting screw
- Option: with pressure limiting for actuator lines
- Option: with LS signal port on the mounting interface

DIMENSIONS

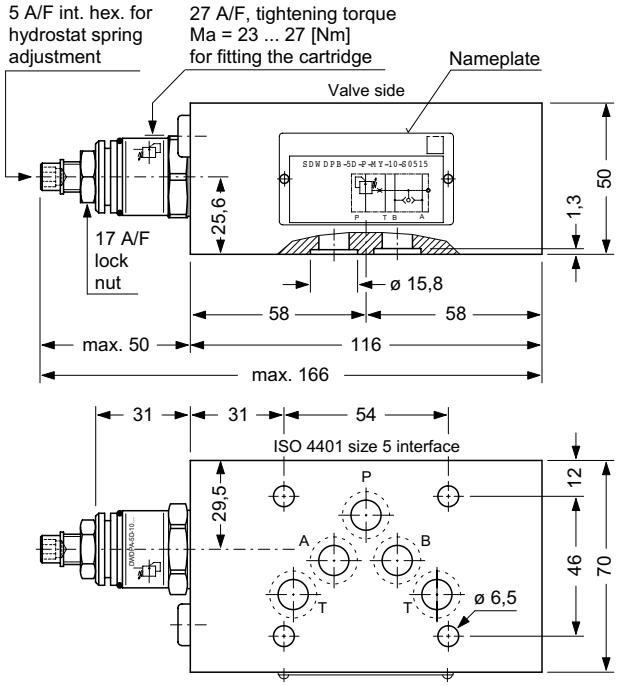

SYMBOL

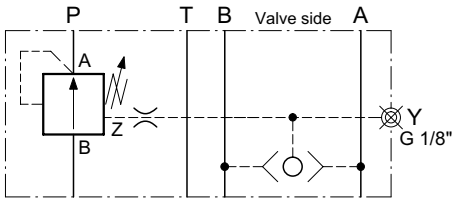

SDWDPB-5D-P-MY-10 ...

Adjuster style **S** **(standard)**

OPTIONS

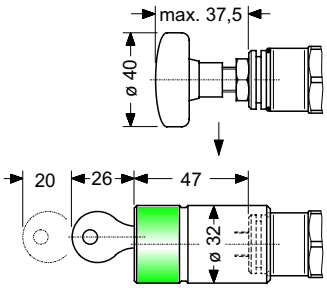

Adjuster style **H**
Hand knob
(can be fitted by user)

Adjuster style **Z4**
Lockable hand knob type 2H complies with Volkswagen Factory Specification BV 1.09
(factory option only)

DESCRIPTION

Series SDWDPB-5D.. stack valves are applied as inline hydrostats, adjustable from 5 ... 15 bar, in hydraulic circuits.

The adjustment feature permits on-site optimisation of the system without the need to replace components which have different flow ranges (e.g. proportional valves).

The orifice which is essential to ensure oscillation-free operation is already incorporated in the Z port of the cartridge.

The integral shuttle valve signals the higher of the load pressures in A or B back to the hydrostat, with the result that the pressure difference across the flow control orifice remains constant.

In conjunction with an orifice or proportional valve located in the downstream P-to-A or P-to-B lines, the overall result produces the benefits of a 2-way flow control function in the P line (see the application example on page 3).

SCHEMATIC SECTION

showing the relevant ports

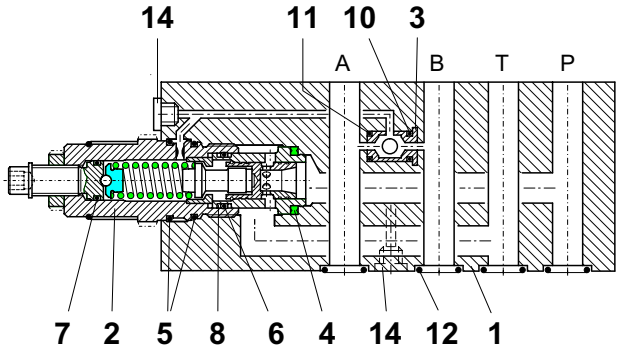

INSTALLATION AND SERVICING

MUST BE CARRIED OUT WITH CARE, AND BY QUALIFIED PERSONNEL ONLY.

At installation, be sure to mount the valve with the correct faces contacting the adjacent units and with all interface connections lining up properly.

When changing seals, the new seals should be thoroughly oiled or greased before fitting them to the valve.

Use the correct tightening torques when fitting the cartridge.

NOTE - before removing the cartridge, fully decompress the hydrostat spring by turning back the adjusting screw. If the hydrostat spring is compressed while the cartridge is removed, the cartridge neck will be pushed out of the cartridge head.

COMPONENTS / SERVICE PARTS

*) = part of seal kit no. DS-268
◢ = available as service part

It.	Qty.	Description		
1	1	Stacking body	50 x 70 x 116	type MY-10
2 ◢	1	Hydrostat cartridge	type DWDPA-5D-10 ...	
3 ◢	1	Shuttle valve	type RW-2,5	
◢	1	Seal kit no. DS-268, comprising *):		
4	1*)	Seal	ø 22,1 / 16,5 x 2,5	
5	2*)	O-ring no. 020	ø 21,95 x 1,78	N90
6	1*)	O-ring	ø 14,00 x 2,00	N90
7	1*)	O-ring no. 012	ø 9,25 x 1,78	N90
8	2*)	Backup ring	ø 18 / 15,2 x 1,2	
9				
10	1*)	O-ring	ø 5,50 x 1,50	N90
11	1*)	O-ring	ø 4,00 x 1,50	N90
12	5*)	O-ring no. 014	ø 14,12 x 1,78	N90
13				
14	2	Plug screw	G 1/8"	ED VSTI

TO ORDER SERVICE PARTS, STATE:

- complete unit model code from the nameplate, including the design number
- data sheet number, including issue date
- part item number from above list
- part description from above list
- quantity required

D-31.55

MAIN CHARACTERISTICS

Type	stacking inline hydrostat
Design	direct acting, sliding spool type
Mounting method	stack mounting
Size	ISO 4401 size 05 interface nominal 10 mm
Mass	2,95 kg
Mounting attitude	unrestricted
Flow direction	see symbol
Operating pressure	... 315 bar in P, A, B and T
Hydrostat spring	adjustable 5 ... 15 bar
Fluids	hydraulic oils HL and HLP to DIN 51 524 other fluids - contact HTF
Min. fluid cleanliness	18/14 to ISO 4406 / CETOP RP70H 8 ... 9 to NAS 1638
Fluid temperature range	-20° ... +60° C
Viscosity range	10 ... 300 cSt
Flow rate Q max.	... 60 l/min
Flow rate Q max. attainable at the actuator	... 60 l/min with spring Δp = 15 bar ... 23 l/min with spring Δp = 5 bar

PERFORMANCE DATA

Oil viscosity 33 cSt

Q - Δp characteristic
at **maximum** hydrostat spring setting (15 bar)

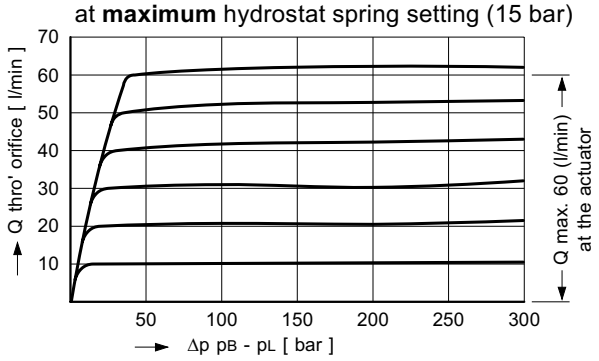

Q - Δp characteristic
at **minimum** hydrostat spring setting (5 bar)

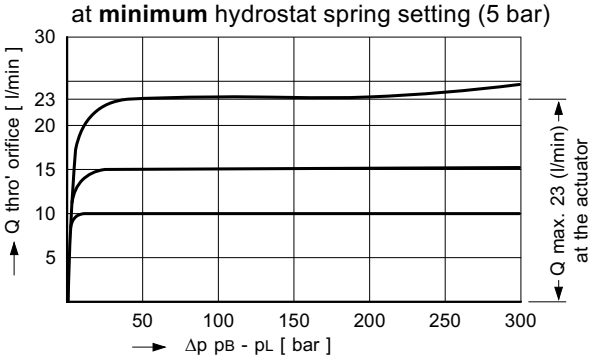

SUBJECT TO CHANGE WITHOUT NOTICE

MODEL CODE KEY

Ex. S D W D P B - 5 D - P - MY - 10 - S 0515 _ - 1

S	=	stacking valve
D	=	pressure function
W	=	hydrostat
D	=	direct acting
P	=	with cartridge valve
A ... Q	=	**standard** model per relevant data sheet
Y ... R	=	special features by arrangement
5	=	pressure control type 5
D	=	with HTF cavity type DD
P	=	function in P
MY	=	stacking body, code MY
10	=	ISO 4401 size 5 interface, nominal 10 mm
S	=	with hex. skt. screw adjuster **(standard)**
H	=	with hand knob adjuster
Z	=	with lockable hand knob adjuster type Z4
0515	=	hydrostat spring 5 ... 15 bar (stepless adjustment)
(blank)	=	Nitrile seals **(standard)**
V	=	Viton seals
S	=	special seals by arrangement
1 ... 9	=	design number (omit when ordering new units)

RELATED DATA SHEETS

i - 41	DIN 24 340 A10 interface
D - 28.55	Hydrostat cartridge, series DWDPA-5D-10 ...
R - 32	Shuttle valve, series RW-2,5

D-31.55

APPLICATION EXAMPLE

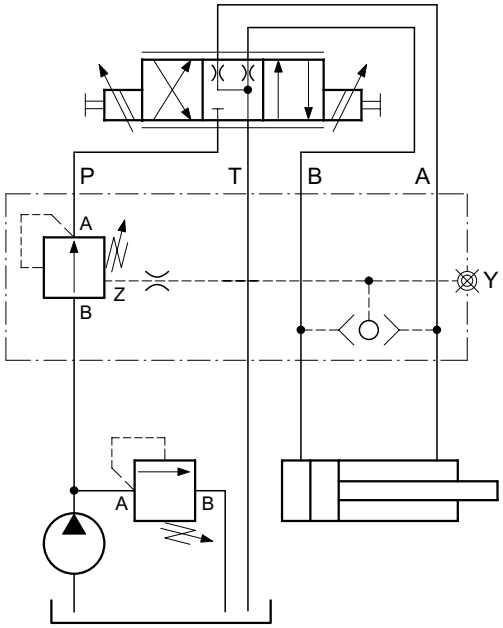

When combined with a downstream orifice, the inline hydrostat provides a two-way flow control function, with its associated benefits.

These are:

- the flow rate set by the orifice remains constant even as the load pressure fluctuates up or down

SUBJECT TO CHANGE WITHOUT NOTICE

Option with pressure limiting

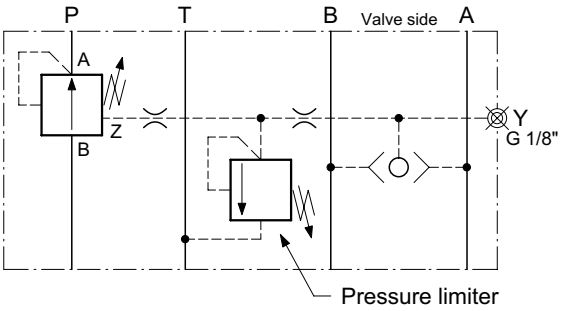

Function:

By including a pressure relief valve in the control line Z, the pressure at the outlet port A of the cartridge will be limited to the relief setting, regardless of the pressure at the inlet B. An actuator which operates at a low pressure can, in this way, be limited in the force it can produce (similar to a pressure reducing function).

Option with LS signal port

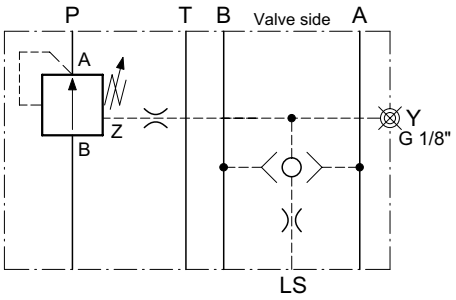

Function:

By combining several LS lines with the help of external check valves, the highest of the various load pressures in one or more stacking assemblies can be fed back to the LS pump or bypass hydrostat.

D-31.55

BUCHER HYDRAULICS
www.bucherhydraulics.com

Germany
Tel.: + 49 7742 8520
Fax: + 49 7742 7116
info.de@bucherhydraulics.com

France
Tel.: + 33 389 64 22 44
Fax: + 33 389 65 28 78
info.fr@bucherhydraulics.com

Netherland
Tel.: + 31 7934 26 24 4
Fax: + 31 7934 26 28 8

Great Britain
Tel.: + 44 2476 44 33 50
Fax: + 44 2476 44 33 51

USA
Tel.: + 1 262 605 82 80
Fax: + 1 262 605 82 78
info.wi@bucherhydraulics.com

Switzerland
Tel.: + 41 33 672 61 11
Fax: + 41 33 672 61 03
info.ch@bucherhydraulics.com

Italy
Tel.: + 39 0522 92 84 11
Fax: + 39 0522 51 32 11
info.it@bucherhydraulics.com

Austria
Tel.: + 43 6216 44 97
Fax: + 43 6216 44 97 4

China
Tel.: + 86 10 68 31 41 08
Fax: + 86 10 68 31 41 21
info bj@bucherhydraulics.com

Product Center Elevator
Tel.: + 41 41 757 03 33
Fax: + 41 41 757 05 00
info.nh@bucherhydraulics.com

Subject to change without notice

Stack-Mounting Counterbalance Valve, NG 6

Q_{max} = 80 l/min, p_{max} = 350 bar
pilot operated, poppet type
Series SNSA…

- Controlled movement of negative loads
- Controls the oil leaving the actuator (counterbalance function)
- Load holding via leak-free poppet valve
- Secondary relief protection for the actuator
- For plate mounting valve, Interface NG 6 to ISO 4401-03-02

1 Description

Counterbalance valves prevent actuator “runaway” in the event of negative loads. The flow leaving the actuator (the A line in the example) is piloted and controlled by the flow entering the actuator (the B line), ensuring a cavitation-free lowering of the load, as long as the valve pressure setting is not exceeded (see application example). A counterbalance valve must be capable of holding the load without leakage. The design of this valve is based on a pilot assisted pressure relief valve (see pressure settings). The pressure in the actuator inlet line causes the relief valve in the actuator outlet line to open. The level of pilot pressure which is required is determined by the valve's pilot area ratio and by the pressure generated by the load itselfs (see pressure settings).
To ensure a reliable secondary relief function (e.g. for thermal expansion) the related directional valve must have a centre condition in which ports A and B are connected to Tank T (spool type function G).

2 Symbol

SNSA-A-6 ...

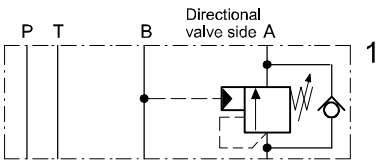

SNSA-B-6 ...

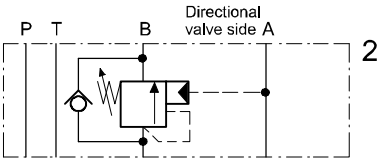

SNSA-AB-6 ...

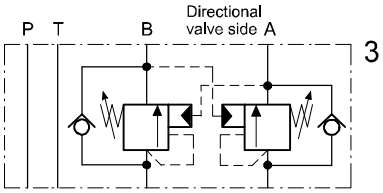

3 Technical data

General characteristics	Description, value, unit
Designation	stack-mounting counterbalance valve
Design	pilot operated, poppet type
Mounting method	stack-mounting
Size	NG 6, interface ISO 4401-03-02
Weight	SNSA-A .. / -B ..-6 = 1.25 kg SNSA-AB ..-6 = 1.50 kg
Mounting attitude	unrestricted
Flow direction	see symbols
Maximum operating pressure	350 bar

WWW.SUMY.IR

General characteristics		Description, value, unit
Adjustment change	pressure range N1 pressure range N2 pressure range M1 pressure range M2	140…350 bar (pilot ratio 4.5:1) 70…280 bar (pilot ratio 3:1) 70…175 bar (pilot ratio 4.5:1) 30…105 bar (pilot ratio 3:1)
Opening pressure via check valve	standard on request	ca. 1.7 bar ca. 0.3 bar
Hydraulic fluid		HL and HLP mineral oil to DIN 51 524; for other fluids, please contact BUCHER
Hydraulic fluid temperature range		-30 °C … +80 °C
Viscosity range		10 … 300 mm^2/s (cSt)
Maximum flow rate		80 l/min
Surface corrosion protection		External parts of screw-in valves are zinc-plated in according to ASTM B633 Type III standard
Surface corrosion protection		Stack-mounting body with temporary corrosion protection
Minimum fluid cleanliness Cleanliness class to ISO 4406 : 1999		class 20/18/15

4 Application example and pressure settings

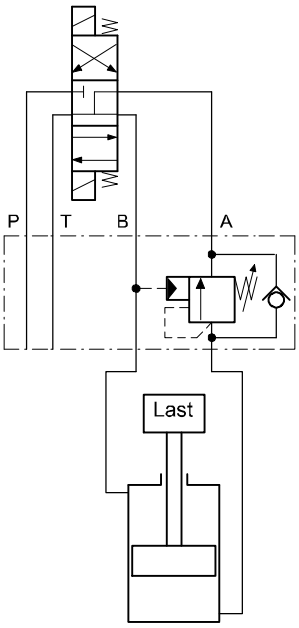

LOAD PRESSURE:

to hold the maximum load without leakage, we recommend that the SNSA ...-6 is set as follows:

$$p_E = p_L \times 1.3$$

p_E = valve pressure setting
p_L = maximum load-induced pressure

Example:

Load pressure p_L = max. 200 [bar]
pressure setting p_E = 200 [bar] x 1.3 = **260 [bar]**

PILOT PRESSURE:

the required pilot pressure is calculated as follows:

$$p_X = \frac{p_E - p_L}{i}$$

p_X = pilot pressure
p_E = valve pressure setting
p_L = effective load-induced pressure
i = pilot ratio (see principal characteristics)

Example:

Load pressure p_L = eff. 180 [bar]
pressure setting p_E = 260 [bar]
pilot ratio i = 4.5

$$p_X = \frac{260\ [\text{bar}] - 180\ [\text{bar}]}{4.5} = \text{approx. } \mathbf{18\ [\text{bar}]}$$

5 Performance graphs

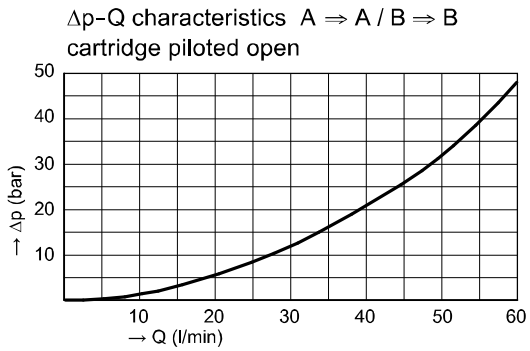

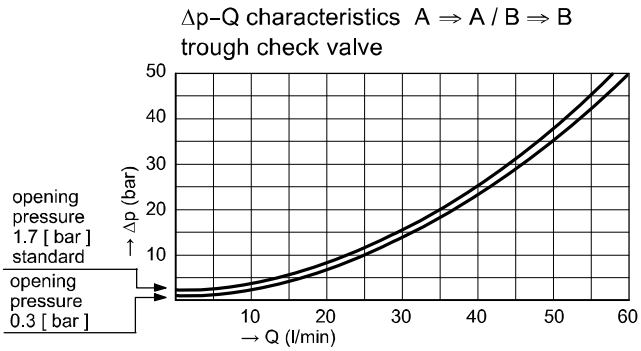

6 Dimensions & sectional view

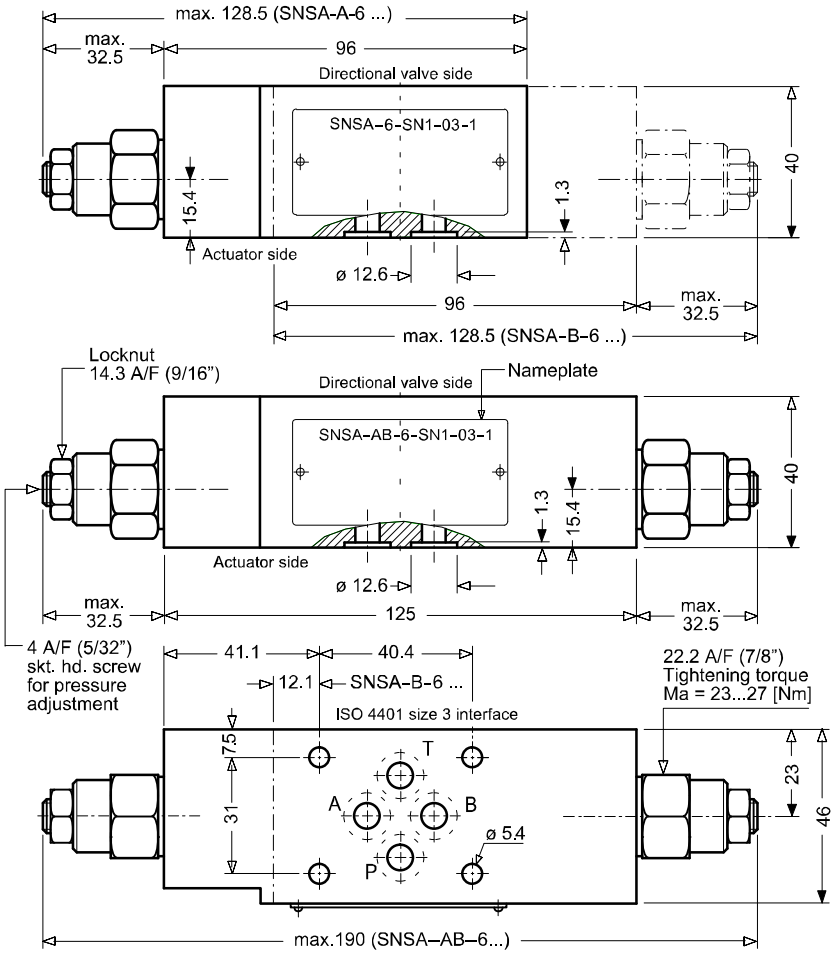

7 Schematic section

showing the relevant ports

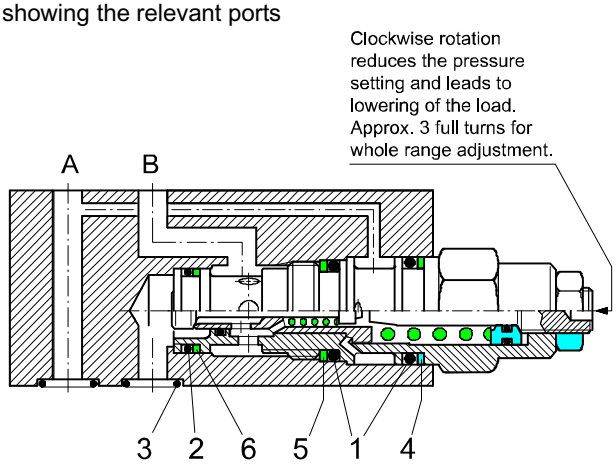

Seal kit Nr. DS-241

It.	Qty.	Qty.	Qty.	Description	Size
1	4	2	2	O-ring Nr. 017	∅ 17.17 x 1.78 N90
2	2	1	1	O-ring Nr. 015	∅ 14.00 x 1.78 N90
3	4	4	4	O-ring Nr. 012	∅ 9.25 x 1.78 N90
4	2	1	1	Backup ring 017	
5	2	1	1	Backup ring 016	
6	2	1	1	Backup ring 015	

SNSA-A-6
SNSA-B-6
SNSA-AB-6...

8 Installation information

ATTENTION!

Maintenance work may only be carried out carefully by qualified personnel. When mounting the valve, make sure that the connection hole pattern matches that of the mating surface. (Do not mix up the connection side and the valve side). When replacing seals, make sure that the seals are well oiled or greased. The function cartridge must be mounted with the specified tightening torque.

9 Ordering code

Ex. S N S A – AB – 6 – S N1 – 18 – _

S	=	stack valve
N	=	counterbalance valve
S	=	poppet type
A … Q	=	standard model per current data sheet
Z … R	=	special features by arrangement on request
A	=	function A
B	=	function B
AB	=	function in A and B
6	=	Nominal size 6
S	=	screw adjustment
N1	=	pressure range 140 … 350 bar (normal version, **standard** design) pilot ratio 4.5:1
N2	=	pressure range 70 … 280 bar (on request) pilot ratio 3:1
M1	=	pressure range 70 … 175 bar (medium version, **standard** design) pilot ratio 4.5:1
M2	=	pressure range 30 … 105 bar (on request) pilot ratio 3:1
	=	valves are shipped with pressure set at the maximum for the specified pressure range e.g. if N1, then 350 bar
18	=	check valve opening pressure 1.7 bar (**standard**)
03		check valve opening pressure 0.3 bar (on request)
(blank)	=	NBR (nitril-butadien-rubber / BUNA) seals (**standard**)
V	=	FKM (fluorocarbon rubber / VITON) seals *(special seals - please consult BUCHER)*

IMPORTANT!
Two check valve cracking pressures are available. Use the 25 psi (1.7 bar) check unless actuator cavitation is a concern.

10 Related data sheets

Reference	Description
400-P-030101	Interface NG 6 to ISO 4401-03-02

info.ch@bucherhydraulics.com www.bucherhydraulics.com

© 2025 by Bucher Hydraulics AG Frutigen, CH-3714 Frutigen
All rights reserved.
Data is provided for the purpose of product description only, and must not be construed as warranted characteristics in the legal sense. The information does not relieve users from the duty of conducting their own evaluations and tests. Because the products are subject to continual improvement, we reserve the right to amend the product specifications contained in this catalogue.

Classification: 430.305.300.305.305

Stack-Mounting Counterbalance Valve, NG 10

Q_{max} = 120 l/min, p_{max} = 350 bar
pilot operated, poppet type
Series SNSA…

- Controlled movement of negative loads
- Controls the oil leaving the actuator (counterbalance function)
- Load holding via leak-free poppet valve
- Secondary relief protection for the actuator
- For plate mounting valve, Interface NG 10 to ISO 4401-05-04

1 Description

Counterbalance valves prevent actuator “runaway” in the event of negative loads. The flow leaving the actuator (the A line in the example) is piloted and controlled by the flow entering the actuator (the B line), ensuring a cavitation-free lowering of the load, as long as the valve pressure setting is not exceeded (see application example). A counterbalance valve must be capable of holding the load without leakage. The design of this valve is based on a pilot assisted pressure relief valve (see pressure settings). The pressure in the actuator inlet line causes the relief valve in the actuator outlet line to open. The level of pilot pressure which is required is determined by the valve's pilot area ratio and by the pressure generated by the load itselfs (see pressure settings).
To ensure a reliable secondary relief function (e.g. for thermal expansion) the related directional valve must have a centre condition in which ports A and B are connected to Tank T (spool type function G).

2 Symbol

SNSA-A-10 ...

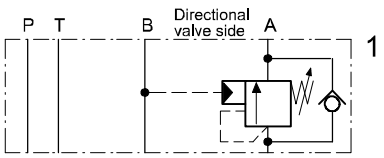

SNSA-B-10 ...

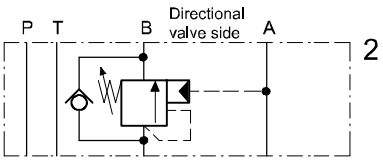

SNSA-AB-10 ...

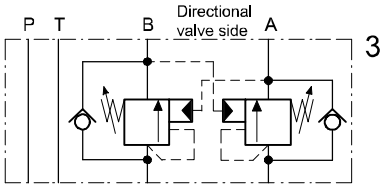

3 Technical data

General characteristics	Description, value, unit
Designation	stack-mounting counterbalance valve
Design	pilot operated, poppet type
Mounting method	stack-mounting
Size	NG 10, interface ISO 4401-05-04
Weight	SNSA-A .. / -B ..-10 = 2.30 kg SNSA-AB ..-10 = 2.50 kg
Mounting attitude	unrestricted

WWW.SUMY.IR

General characteristics		Description, value, unit
Flow direction		see symbols
Maximum operating pressure		350 bar
Adjustment change	pressure range N1 pressure range N2 pressure range M1 pressure range M2	140…350 bar (pilot ratio 4.5:1) 70…280 bar (pilot ratio 3:1) 70…175 bar (pilot ratio 4.5:1) 30…105 bar (pilot ratio 3:1)
Opening pressure via check valve	standard on request	ca. 1.7 bar ca. 0.3 bar
Hydraulic fluid		HL and HLP mineral oil to DIN 51 524; for other fluids, please contact BUCHER
Hydraulic fluid temperature range		-30 °C … +80 °C
Viscosity range		10 … 300 mm^2/s (cSt)
Maximum flow rate		120 l/min
Surface corrosion protection		External parts of screw-in valves are zinc-plated in according to ASTM B633 Type III standard
Surface corrosion protection		Stack-mounting body with temporary corrosion protection
Minimum fluid cleanliness Cleanliness class to ISO 4406 : 1999		class 20/18/15

4 Application example and pressure settings

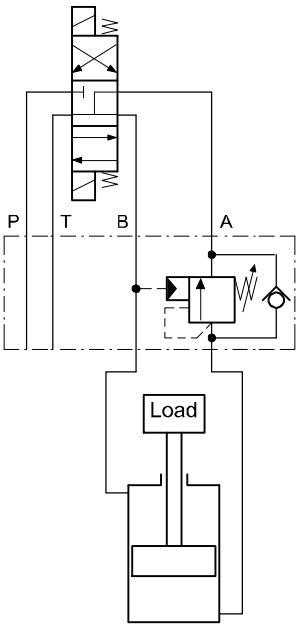

LOAD PRESSURE:

to hold the maximum load without leakage, we recommend that the SNSA ...-10 is set as follows:

$$p_E = p_L \times 1.3$$

p_E = valve pressure setting
p_L = maximum load-induced pressure

Example: Load pressure p_L = max. 200 [bar]
pressure setting p_E = 200 [bar] x 1.3 = **260 [bar]**

PILOT PRESSURE:

the required pilot pressure is calculated as follows:

$$p_X = \frac{p_E - p_L}{i}$$

p_X = pilot pressure
p_E = valve pressure setting
p_L = effective load-induced pressure
i = pilot ratio (see principal characteristics)

Example: Load pressure p_L = eff. 180 [bar]
pressure setting p_E = 260 [bar]
pilot ratio i = 4.5

$$p_X = \frac{260\ [\text{bar}] - 180\ [\text{bar}]}{4.5} = \text{approx. } \mathbf{18\ [\text{bar}]}$$

5 Performance graphs

Δp–Q characteristics A ⇒ A / B ⇒ B
cartridge piloted open

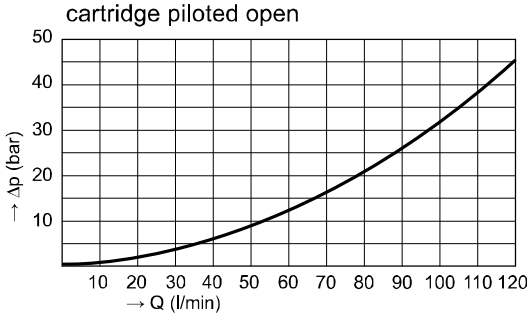

Δp–Q characteristics A ⇒ A / B ⇒ B
trough check valve

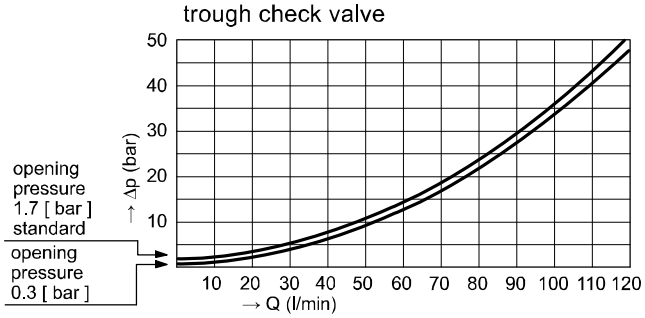

6 Dimensions & sectional view

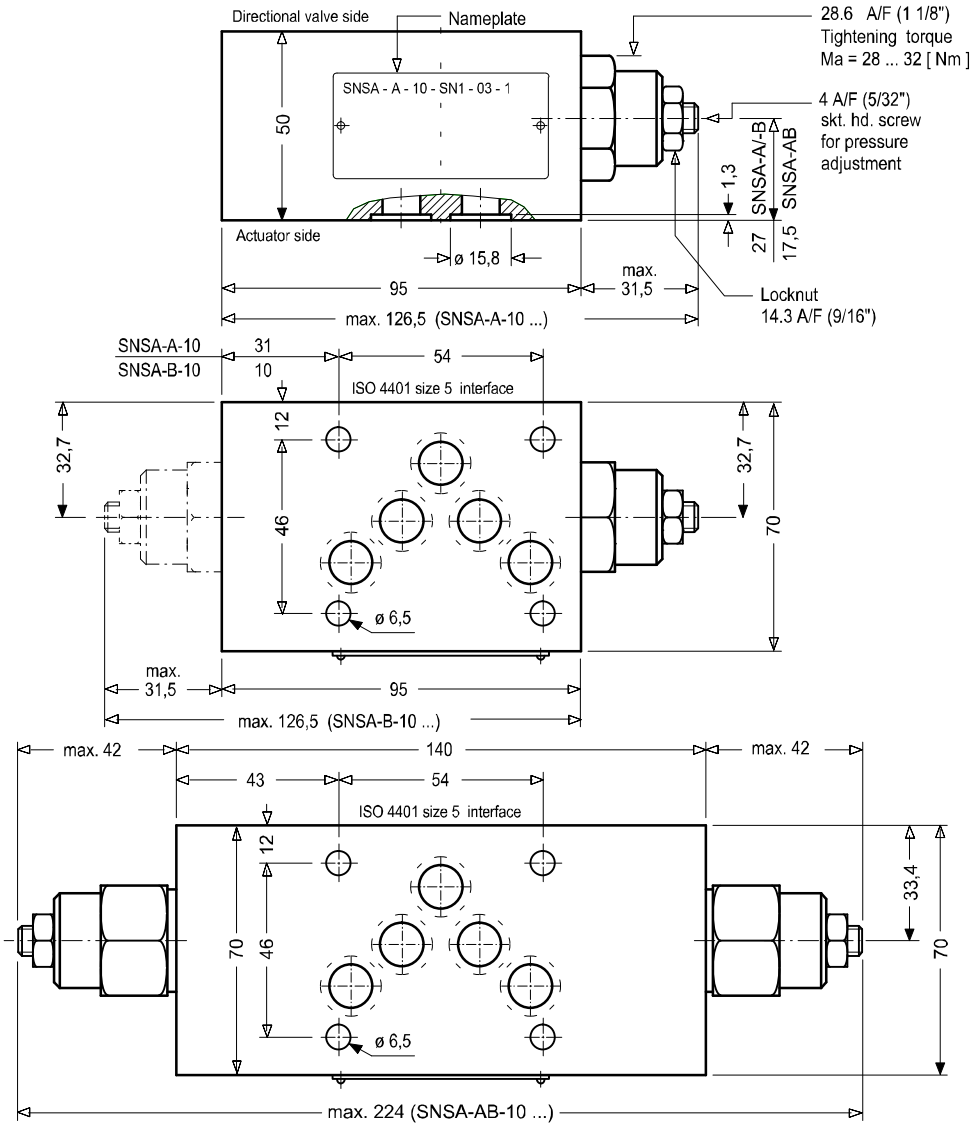

7 Schematic section

showing the relevant ports

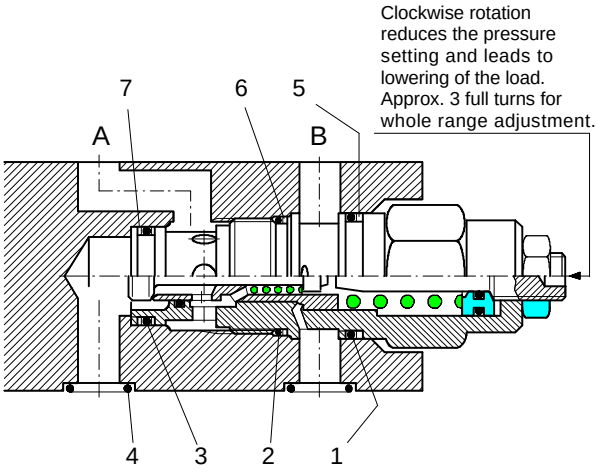

Seal kit Nr. DS-240

It.	Qty.	Qty.	Qty.	Description	Size
1	2	1	1	O-ring Nr. 021	∅ 23.52 x 1.78 N90
2	2	1	1	O-ring Nr. 020	∅ 21.95 x 1.78 N90
3	2	1	1	O-ring Nr. 018	∅ 18.77 x 1.78 N90
4	5	5	5	O-ring Nr. 014	∅ 12.42 x 1.78 N90
4	2	1	1	Backup ring 021	
5	2	1	1	Backup ring 020	
6	4	2	2	Backup ring 018	

SNSA-A-10
SNSA-B-10
SNSA-AB-10...

8 Installation information

ATTENTION!

Maintenance work may only be carried out carefully by qualified personnel. When mounting the valve, make sure that the connection hole pattern matches that of the mating surface. (Do not mix up the connection side and the valve side). When replacing seals, make sure that the seals are well oiled or greased. The function cartridge must be mounted with the specified tightening torque.

9 Ordering code

Ex. S N S A – AB – 10 – S N1 – 18 – _

S	=	stack valve
N	=	counterbalance valve
S	=	poppet type
A … Q	=	standard model according to valid data sheet
Z … R	=	special model (on request)
A	=	function A
B	=	function B
AB	=	function in A and B
10	=	Nominal size 10
S	=	screw adjustment
N1	=	pressure range 140 … 350 bar (normal version, **standard** design) pilot ratio 4.5:1
N2	=	pressure range 70 … 280 bar (on request) pilot ratio 3:1
M1	=	pressure range 70 … 175 bar (medium version, **standard** design) pilot ratio 4.5:1
M2	=	pressure range 30 … 105 bar (on request) pilot ratio 3:1
	=	valves are shipped with pressure set at the maximum for the specified pressure range e.g. if N1, then 350 bar
18	=	check valve opening pressure 1.7 bar (**standard**)
03		check valve opening pressure 0.3 bar (on request)
(blank)	=	NBR (nitril-butadien-rubber / BUNA) seals (**standard**)
V	=	FKM (fluorocarbon rubber / VITON) seals (special seals on request)

IMPORTANT!
Two check valve cracking pressures are available. Use the 25 psi (1.7 bar) check unless actuator cavitation is a concern.

10 Related data sheets

Reference	Description
400-P-050101	Size 05 interface to ISO 4401-05-04

info.ch@bucherhydraulics.com www.bucherhydraulics.com

© 2025 by Bucher Hydraulics AG Frutigen, CH-3714 Frutigen
All rights reserved.
Data is provided for the purpose of product description only, and must not be construed as warranted characteristics in the legal sense. The information does not relieve users from the duty of conducting their own evaluations and tests. Because the products are subject to continual improvement, we reserve the right to amend the product specifications contained in this catalogue.

Classification: 430.305.300.305.305

BUCHER hydraulics

COUNTERBALANCE VALVE
POPPET TYPE WITH FREE REVERSE FLOW

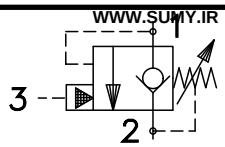

TORQUE:
Steel = 35/40 Ft–Lb. [47/54 Nm]
Aluminum = 25/30 Ft–Lb. [34/41 Nm]

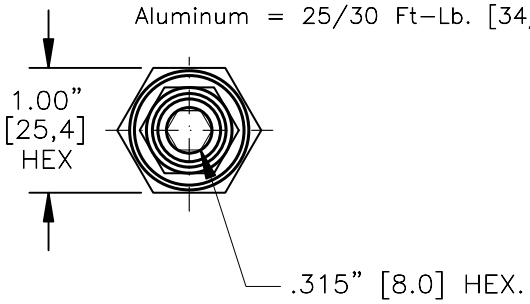

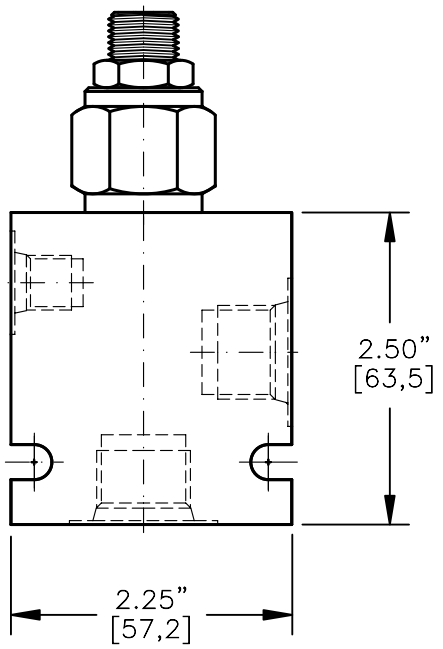

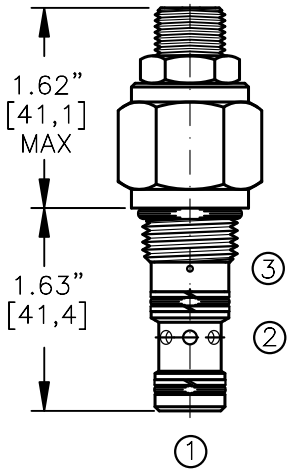

FOR ALUMINUM OR STEEL VALVE HOUSING CONFIGURATIONS SEE PAGE 0–021–1.

CBPA–08–X–X–X–XX

BASIC

SIZE
08 = 3/4"–16 UNF

SEALS
N = BUNA "N"
V = VITON

ADJUSTMENT
S = ADJUSTING SCREW
C = CAPPED
T = TAMPERPROOF
K = HANDKNOB
M = METAL HANDKNOB

PORTS
0 = CARTRIDGE ONLY
03BX = G 3/8" BSPP
08TX = SAE – #8
"A" – ALUM. HOUSING
"S" – STEEL HOUSING

PRESSURE RANGE
15 = 100 TO 1500 PSI
30 = 300 TO 3000 PSI
50 = 1500 TO 5000 PSI

FOR ADJUSTMENT CONTROL OPTIONS SEE PAGE 0–050.0

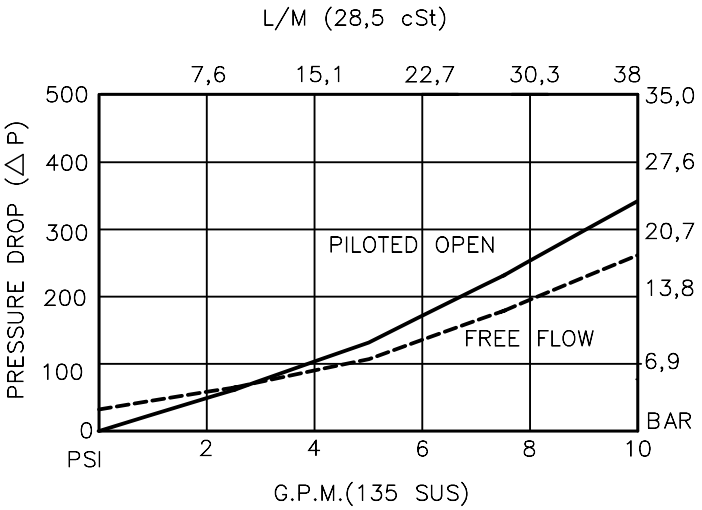

BUCHER hydraulics

WWW.SUMY.IR

COUNTERBALANCE VALVE
POPPET TYPE WITH FREE REVERSE FLOW.

DESCRIPTION

This unit is a DIRECT ACTING, SCREW IN CARTRIDGE STYLE, POPPET TYPE, ADJUSTABLE, PILOT ASSISTED, HYDRAULIC COUNTERBALANCE VALVE.

OPERATIONS

This valve controls moving load and preventing it from running ahead of the pump, locking the load in any position, it also provides static overload and thermal expansion protection.
This valve is a MODULATING DEVICE that allows free flow from port 2 to port 1 and then blocks reverse flow until a pilot pressure INVERSELY PROPORTIONAL to the load pressure is sensed at port 3 modulating flow from port 1 to port 2.

FEATURES AND BENEFITS

Leakproof screw adjustment.
Adjustment screw can not be backed out of the valve.
Overset protection – spring can not go solid.
Hardened precision fitted poppet & cage provides reliable, long life.
A unibody cage construction and with no dynamic seals on all moving parts provides very low hysteresis (1.5%) and reliable operation.
Minor internal leakage past the pilot piston purges the air from the pilot line thus improving stability.
All external carbon steel parts are plated for longer life against the elements.
Valve is available with screw, tamperproof, capped and handknob adjustments.
All cartridge valves are 100% functionally tested.
Industry common cavity.

BUCHER hydraulics

WWW.SUMY.IR

COUNTERBALANCE VALVE
POPPET TYPE WITH FREE REVERSE FLOW.

SPECIFICATIONS

OPERATING PRESSURE: 5,000 PSI [350 Bar]
PROOF PRESSURE: 10,000 PSI [700 Bar]
FLOW: 10.0 GPM [38 L/M] nominal. See performance chart.
PILOT RATIO: 4 to 1
INTERNAL LEAKAGE: 5 drops/min @ 90% of crack pressure.^J
DEFINITION OF CRACK: evident at 0.06 GPM [0.25 LPM]
VALVE HOUSINGS: 2500 PSI [175 Bar] = Aluminum – Anodized.
5000 PSI [350 Bar] = Steel – Unplated.
OPERATING TEMPERATURE: –40° to +250° F. [–40° to +120° C.]
OPERATING MEDIA: All general purpose hydraulic fluids such as MIL–H–5606, SAE–#10, SAE–#20, etc.
INSTALLATION: No restriction.
FILTRATION: 25 microns or better.
SEAL KIT NUMBER: SKN–0828 for buna "N".
SKV–0828 for viton.
WEIGHT: 0.30 lb [.14 kg] cartridge only.
VALVE CAVITY: #C0825, See Page 0–021.0.

info.el@bucherhydraulics.com www.bucherhydraulics.com/commoncavity

© 2015 by Bucher Hydraulics, Inc., 2545 Northwest Parkway, Elgin, Illinois 60124, USA
All rights reserved.
The technical information in this catalog, may contain calculated figures (for reference only) and not actual performance data for this product. Data is provided for the purpose of product description only, and must not be construed as warranted characteristics in the legal sense. The information does not relieve users from the duty of conducting their own evaluations and tests. Because the products are subject to continual improvement, we reserve the right to amend the product specifications contained in this catalogue.

BUCHER hydraulics

COUNTERBALANCE VALVE
POPPET TYPE WITH FREE REVERSE FLOW.

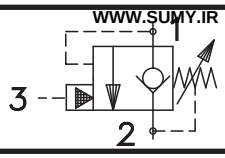

TORQUE:
Steel = 55/60 Ft–Lb. [74/81 Nm]
Aluminum = 35/40 Ft–Lb. [47/54 Nm]

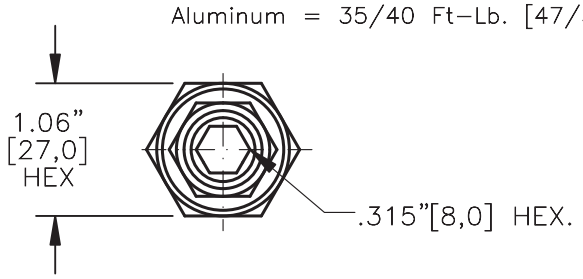

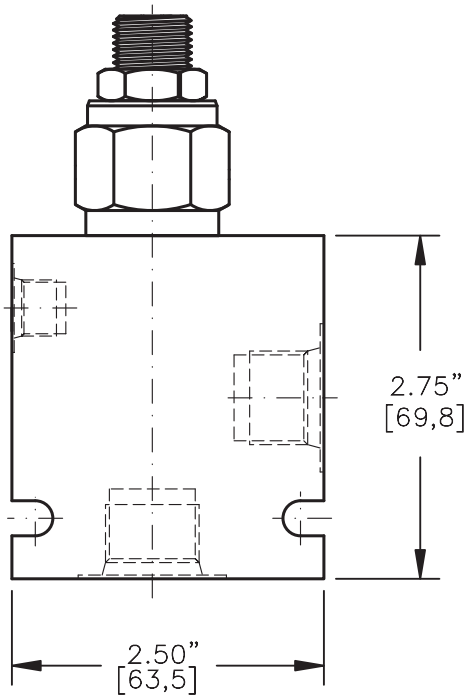

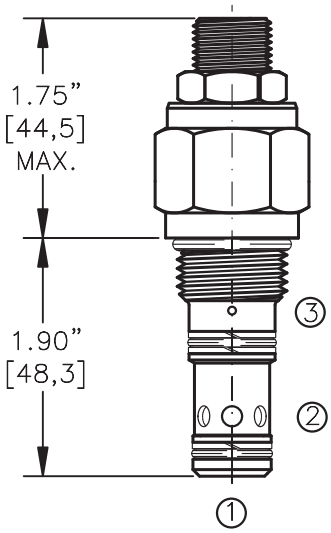

FOR ALUMINUM OR STEEL VALVE HOUSING CONFIGURATIONS SEE PAGE 0–022–1.

CBPA–10–X–X–X–XX

BASIC

SIZE
10 = 7/8"–14 UNF

SEALS
N = BUNA "N"
V = VITON

ADJUSTMENT
S = ADJUSTING SCREW
C = CAPPED
T = TAMPERPROOF
K = HANDKNOB
M = METAL HANDKNOB

PORTS
0 = CARTRIDGE ONLY
03BX = G 3/8" BSPP
04BX = G 1/2" BSPP
08TX = SAE – #8
10TX = SAE – #10
"A" – ALUM. HOUSING
"S" – STEEL HOUSING

PRESSURE RANGE
15 = 100 TO 1500 PSI
30 = 300 TO 3000 PSI
50 = 500 TO 5000 PSI

FOR ADJUSTMENT CONTROL OPTIONS SEE PAGE 0–050.0

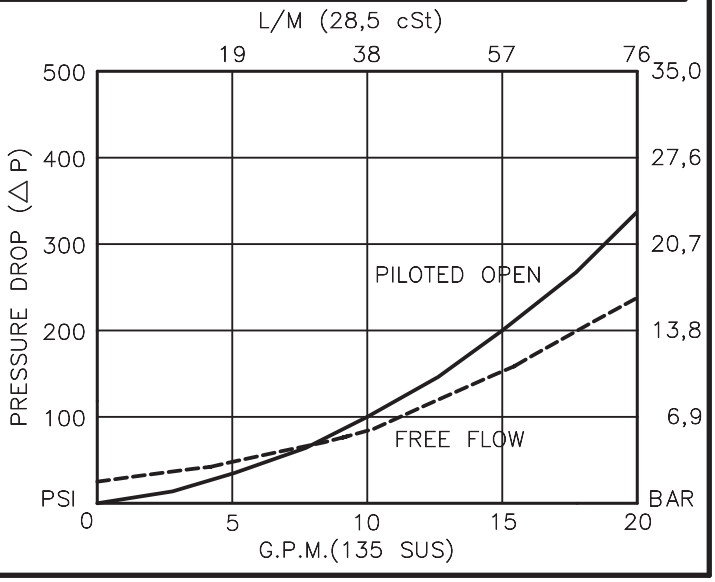

BUCHER hydraulics

WWW.SUMY.IR

COUNTERBALANCE VALVE
POPPET TYPE WITH FREE REVERSE FLOW.

DESCRIPTION

This unit is a DIRECT ACTING, SCREW IN CARTRIDGE STYLE, POPPET TYPE, ADJUSTABLE, PILOT ASSISTED, HYDRAULIC COUNTERBALANCE VALVE.

OPERATIONS

This valve controls moving load and preventing it from running ahead of the pump, locking the load in any position, it also provides static overload and thermal expansion protection.
This valve is a MODULATING DEVICE that allows free flow from port 2 to port 1 and then blocks reverse flow until a pilot pressure INVERSELY PROPORTIONAL to the load pressure is sensed at port 3 modulating flow from port 1 to port 2.

FEATURES AND BENEFITS

Leakproof screw adjustment.
Adjustment screw can not be backed out of the valve.
Overset protection – spring can not go solid.
Hardened precision fitted poppet & cage provides reliable, long life.
A unibody cage construction and with no dynamic seals on all moving parts provides very low hysteresis (1.5%) and reliable operation.
Minor internal leakage past the pilot piston purges the air from the pilot line thus improving stability.
All external carbon steel parts are plated for longer life against the elements.
Valve is available with screw, tamperproof, capped and handknob adjustments.
All cartridge valves are 100% functionally tested.
Industry common cavity.

BUCHER hydraulics

WWW.SUMY.IR

COUNTERBALANCE VALVE
POPPET TYPE WITH FREE REVERSE FLOW.

SPECIFICATIONS

OPERATING PRESSURE: 5,000 PSI [350 Bar]
PROOF PRESSURE: 10,000 PSI [700 Bar]
FLOW: 20.0 GPM [76 L/M] nominal. See performance chart.
PILOT RATIO: 4 to 1
INTERNAL LEAKAGE: 5 drops/min @ 90% of crack pressure.^J
DEFINITION OF CRACK: evident at 0.06 GPM [0.25 LPM]
VALVE HOUSINGS: 2500 PSI [175 Bar] = Aluminum – Anodized.
5000 PSI [350 Bar] = Steel – Unplated.
OPERATING TEMPERATURE: –40° to +250° F. [–40° to +120° C.]
OPERATING MEDIA: All general purpose hydraulic fluids such as MIL–H–5606, SAE–#10, SAE–#20, etc.
INSTALLATION: No restriction.
FILTRATION: 25 microns or better.
SEAL KIT NUMBER: SKN–1028 for buna "N".
SKV–1028 for viton.
WEIGHT: 0.46 lb [.21 kg] cartridge only.
VALVE CAVITY: #C1025, See Page 0–022.0.

info.el@bucherhydraulics.com www.bucherhydraulics.com/commoncavity

© 2015 by Bucher Hydraulics, Inc., 2545 Northwest Parkway, Elgin, Illinois 60124, USA
All rights reserved.
The technical information in this catalog, may contain calculated figures (for reference only) and not actual performance data for this product. Data is provided for the purpose of product description only, and must not be construed as warranted characteristics in the legal sense. The information does not relieve users from the duty of conducting their own evaluations and tests. Because the products are subject to continual improvement, we reserve the right to amend the product specifications contained in this catalogue.

BUCHER hydraulics

COUNTERBALANCE VALVE
POPPET TYPE WITH FREE REVERSE FLOW.

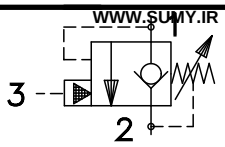

WWW.SUMY.IR

TORQUE:
Steel = 70/75 Ft–Lb. [95/102 Nm]
Aluminum = 55/60 Ft–Lb. [74/81 Nm]

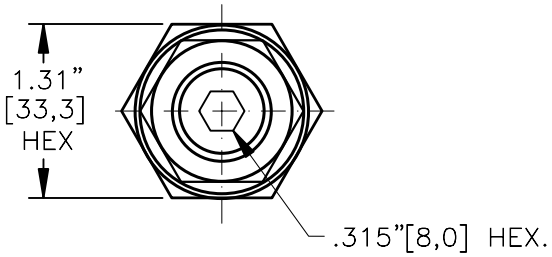

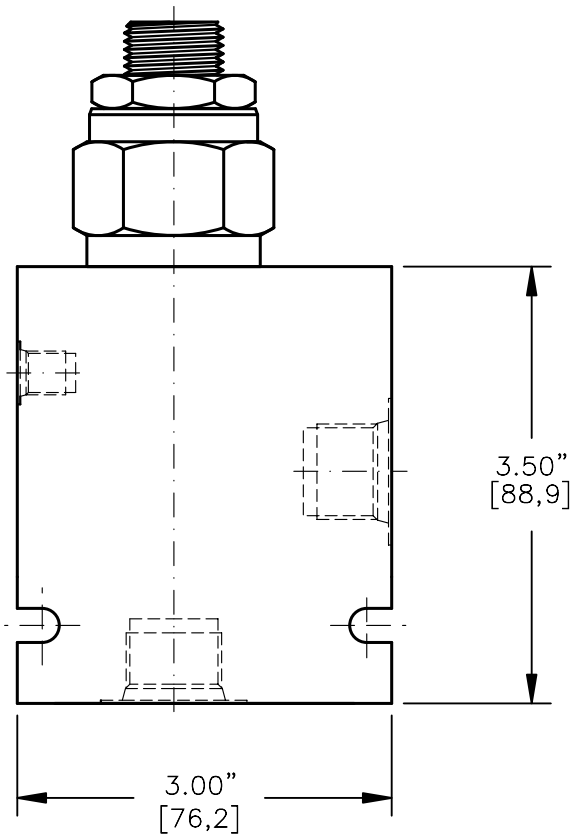

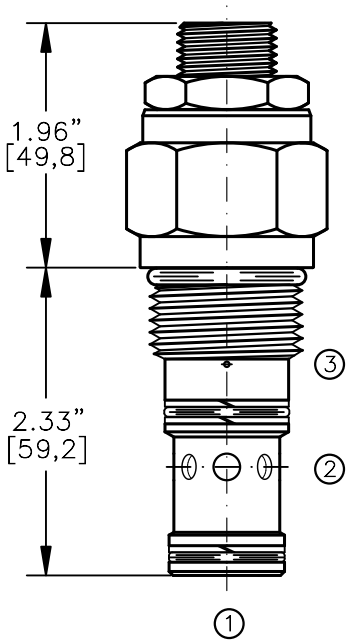

FOR ALUMINUM OR STEEL VALVE HOUSING CONFIGURATIONS SEE PAGE 0–023–1.

CBPA–12–X–X–X–XX

BASIC

SIZE
12 = 1.062"–12 UNF

SEALS
N = BUNA "N"
V = VITON

ADJUSTMENT
S = ADJUSTING SCREW
C = CAPPED
T = TAMPERPROOF

PORTS
0 = CARTRIDGE ONLY
04BX = G 1/2" BSPP
06BX = G 3/4" BSPP
10TX = SAE – #10
12TX = SAE – #12

"A" – ALUM. HOUSING
"S" – STEEL HOUSING

PRESSURE RANGE
15 = 100 TO 1500 PSI
30 = 300 TO 3000 PSI
40 = 600 TO 4000 PSI

FOR ADJUSTMENT CONTROL OPTIONS SEE PAGE 0–050.0

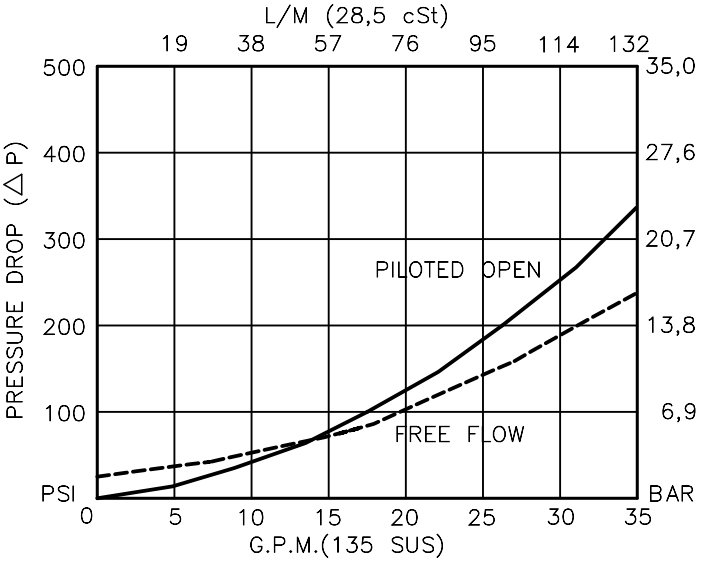

BUCHER hydraulics

WWW.SUMY.IR

COUNTERBALANCE VALVE
POPPET TYPE WITH FREE REVERSE FLOW.

DESCRIPTION

This unit is a DIRECT ACTING, SCREW IN CARTRIDGE STYLE, POPPET TYPE, ADJUSTABLE, PILOT ASSISTED, HYDRAULIC COUNTERBALANCE VALVE.

OPERATIONS

This valve controls moving load and preventing it from running ahead of the pump, locking the load in any position, it also provides static overload and thermal expansion protection.
This valve is a MODULATING DEVICE that allows free flow from port 2 to port 1 and then blocks reverse flow until a pilot pressure INVERSELY PROPORTIONAL to the load pressure is sensed at port 3 modulating flow from port 1 to port 2.

FEATURES AND BENEFITS

Leakproof screw adjustment.
Adjustment screw can not be backed out of the valve.
Overset protection – spring can not go solid.
Hardened precision fitted poppet & cage provides reliable, long life.
A unibody cage construction and with no dynamic seals on all moving parts provides very low hysteresis (1.5%) and reliable operation.
Minor internal leakage past the pilot piston purges the air from the pilot line thus improving stability.
All external carbon steel parts are plated for longer life against the elements.
Valve is available with screw, tamperproof, and capped adjustments.
All cartridge valves are 100% functionally tested.

SPECIFICATIONS

OPERATING PRESSURE: 4,000 PSI [276 Bar]
PROOF PRESSURE: 10,000 PSI [700 Bar]
FLOW: 35.0 GPM [132 L/M] nominal. See performance chart.
PILOT RATIO: 4 to 1
INTERNAL LEAKAGE: 5 drops/min @ 90% of crack pressure.^J
DEFINITION OF CRACK: evident at 0.06 GPM [0.25 LPM]
VALVE HOUSINGS: 2500 PSI [175 Bar] = Aluminum – Anodized.
5000 PSI [350 Bar] = Steel – Unplated.
OPERATING TEMPERATURE: –40° to +250° F. [–40° to +120° C.]
OPERATING MEDIA: All general purpose hydraulic fluids such as MIL–H–5606, SAE–#10, SAE–#20, etc.
INSTALLATION: No restriction.
FILTRATION: 25 microns or better.
SEAL KIT NUMBER: SKN–1228 for Buna "N".
SKV–1228 for Viton.
WEIGHT: 0.84 lb [0,38 kg] cartridge only.
VALVE CAVITY: #C1225, See Page 0–023.0.

info.el@bucherhydraulics.com www.bucherhydraulics.com/commoncavity

© 2015 by Bucher Hydraulics, Inc., 2545 Northwest Parkway, Elgin, Illinois 60124, USA
All rights reserved.
The technical information in this catalog, may contain calculated figures (for reference only) and not actual performance data for this product. Data is provided for the purpose of product description only, and must not be construed as warranted characteristics in the legal sense. The information does not relieve users from the duty of conducting their own evaluations and tests. Because the products are subject to continual improvement, we reserve the right to amend the product specifications contained in this catalogue.

BUCHER hydraulics

WWW.SUMY.IR

COUNTERBALANCE VALVE
POPPET TYPE WITH FREE REVERSE FLOW.

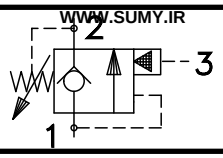

FITS INTO SUN CAVITY #T-11A

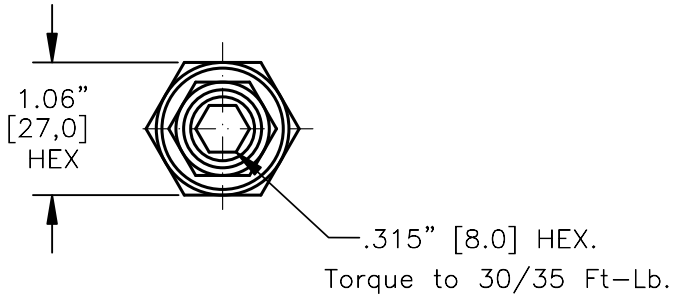

Turn screw clockwise to increase the pressure setting.

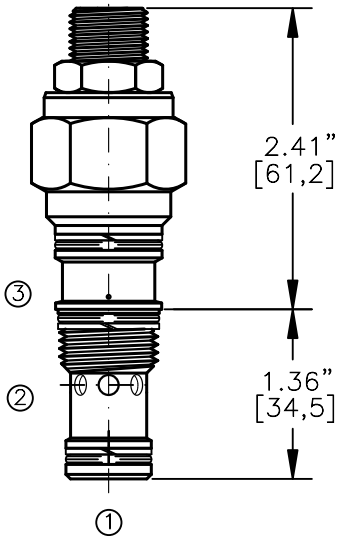

CBPA-20M-X-X-X-XX

BASIC

SIZE
20M=20,0x1,5MM THD.

SEALS
N = BUNA "N"
V = VITON

ADJUSTMENT
S = ADJUSTING SCREW
C = CAPPED
T = TAMPERPROOF
K = HANDKNOB
M = METAL HANDKNOB

PORTS
0 = CARTRIDGE ONLY

PRESSURE RANGE
15 = 100 TO 1500 PSI
30 = 300 TO 3000 PSI
50 = 500 TO 5000 PSI

FOR ADJUSTMENT CONTROL OPTIONS SEE PAGE 0-050.0

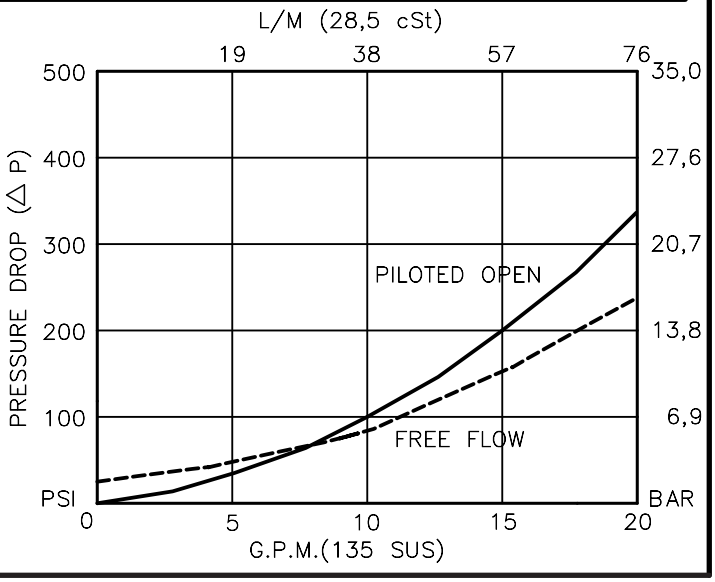

BUCHER hydraulics

WWW.SUMY.IR

COUNTERBALANCE VALVE
POPPET TYPE WITH FREE REVERSE FLOW.

DESCRIPTION

This unit is a DIRECT ACTING, SCREW IN CARTRIDGE STYLE, POPPET TYPE, ADJUSTABLE, PILOT ASSISTED, HYDRAULIC COUNTERBALANCE VALVE.

OPERATIONS

This valve controls moving load and preventing it from running ahead of the pump, locking the load in any position, it also provides static overload and thermal expansion protection.
This valve is a MODULATING DEVICE that allows free flow from port 2 to port 1 and then blocks reverse flow until a pilot pressure INVERSELY PROPORTIONAL to the load pressure is sensed at port 3 modulating out flow from port 1 to port 2.

FEATURES AND BENEFITS

Leakproof screw adjustment.
Adjustment screw can not be backed out of the valve.
Overset protection – spring can not go solid.
Hardened precision fitted poppet & cage provides reliable, long life.
A unibody cage construction and with no dynamic seals on all moving parts provides very low hysteresis (1.5%) and reliable operation.
Minor internal leakage past the pilot piston purges the air from the pilot line thus improving stability.
All external carbon steel parts are plated for longer life against the elements.
Valve is available with screw, tamperproof, capped and handknob adjustments.
All cartridge valves are 100% functionally tested.
Fits in to SUN cavity # T–11A.

SPECIFICATIONS

OPERATING PRESSURE: 5,000 PSI [350 Bar]
PROOF PRESSURE: 10,000 PSI [700 Bar]
FLOW: 20.0 GPM [76 L/M] nominal. See performance chart.
PILOT RATIO: 4 to 1
INTERNAL LEAKAGE: 5 drops/min @ 90% of crack pressure.^J
DEFINITION OF CRACK: evident at 0.06 GPM [0.25 LPM]
OPERATING TEMPERATURE: –40° to +250° F. [–40° to +120° C.]
OPERATING MEDIA: All general purpose hydraulic fluids such as MIL–H–5606, SAE–#10, SAE–#20, etc.
INSTALLATION: No restriction.
FILTRATION: 25 microns or better.
SEAL KIT NUMBER: SKN–1029 for buna "N".
SKV–1029 for viton.
WEIGHT: 0.46 lb [.21 kg] cartridge only.
VALVE CAVITY: SUN # T–11A.

info.el@bucherhydraulics.com www.bucherhydraulics.com/commoncavity

© 2015 by Bucher Hydraulics, Inc., 2545 Northwest Parkway, Elgin, Illinois 60124, USA
All rights reserved.
The technical information in this catalog, may contain calculated figures (for reference only) and not actual performance data for this product. Data is provided for the purpose of product description only, and must not be construed as warranted characteristics in the legal sense. The information does not relieve users from the duty of conducting their own evaluations and tests. Because the products are subject to continual improvement, we reserve the right to amend the product specifications contained in this catalogue.

Counterbalance Valve, Poppet Type, SAE 10 / NG 8

Q_{max} = 15.0 gpm (60 l/min), p_{max} = 5000 psi (350 bar)
direct acting, pilot assisted, poppet type, non-vented, adjustable
Series CBPP-10… / CBPP-20M…

- Leak free and smooth-running pressure adjustment
- Adjustment screw can not be backed out of the valve
- Overset protection - spring can not go solid
- Hardened precision fitted piston & poppet provide reliable, long life
- A unibody adapter cage construction provides very reliable operation
- Low hysteresis - pilot piston not sealed towards the spring chamber
- Can be fitted in a line-mounting body

1 Description

The Counterbalance Valve model series CBPP… is a differential area, direct acting, screw in cartridge style, non-vented, poppet type, adjustable, pilot assisted, hydraulic counterbalance valve with thread 7/8-14 UNF (CBPP-10…) or 20 x 1.5 mm (CBPP-20M…) are size SAE 10 / NG 8. This valve controls a moving load, preventing it from running ahead of the pump. Locking the load in any position, it also provides static overload and thermal expansion protection. This valve is a modulating device that allows free flow from port 2 to port 1, then blocks reverse flow until a pilot pressure inversely proportional to the load pressure is sensed at port 3 modulating flow from port 1 to port 2. Back pressure at port 2 adds to the spring setting (pilot ratio +1) x back pressure. All external parts of the cartridge are zinc plated and chromited (CrVI–free). If you intend to manufacture your own cavities or are designing a line-mounting installation, please refer to the section “Related data sheets”.

2 Symbol

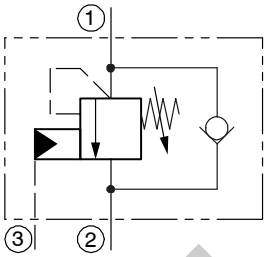

3 Technical data

General characteristics	Description, value, unit
Designation	counterbalance valve, non-vented
Design	poppet type, free reverse flow, pilot assisted
Mounting method	screw-in cartridge 7/8-14 UNF-2A or M20 x 1.5 mm
Size	SAE 10 / NG 8, cavity type C1025 or T-11A
Weight	0.62 lbs (0.28 kg)
Mounting attitude	design B: unrestricted design S,C,T: hanging or horizontal mounting position
Ambient temperature range	-40 °F … +250 °F (-40 °C … +120 °C)

Phase-out

Hydraulic characteristics		Description, value, unit	
Maximum operating pressure		5000 psi	(350 bar)
Maximum flow rate	Standard	15.0 gpm	(60 l/min)
Nominal pressure ranges		1500, 3000, 5000 psi For further pressure ranges, please contact BUCHER	(100, 210, 350 bar)
Pilot Ratio		2.3, 3.0, 4.5 to 1 – 1.5 and 10 to 1 on request For further pilot ratios, please contact BUCHER	
Leakage flow rate		5 drops/min. @ 80 % of crack pressure	
Definition of Crack		evident at 0.06 gpm	(0,25 l/min)
Hydraulic fluid		Mineral-based or synthetics with lubricating properties. HL and HLP mineral oil to DIN 51 524; for other fluids, please contact BUCHER	
Hydraulic fluid temperature range		-13 °F … +175 °F	(-25 °C … +80 °C)
Viscosity range		10…500 mm^2/s (cSt), recommended 15...250 mm^2/s (cSt)	
Minimum fluid cleanliness Cleanliness class to ISO 4406 : 1999		class 20/18/15	

4 Performance graphs [measured with oil viscosity 33 mm^2/s (cSt)]

Δp = f (Q) Relief Characteristic [pw = 5000 psi]
unrestricted ***

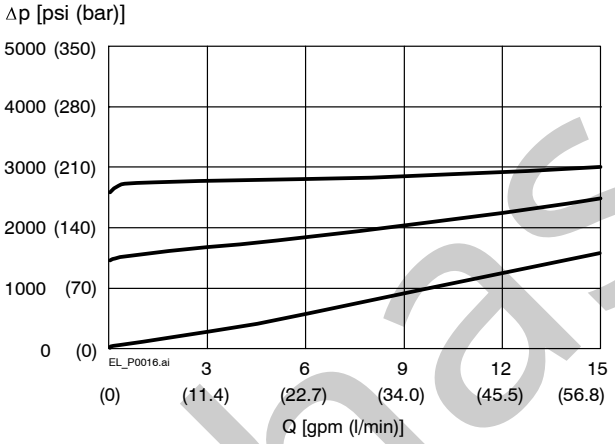

Δp = f (Q) Pressure drop - Flow rate characteristic
unrestricted ***

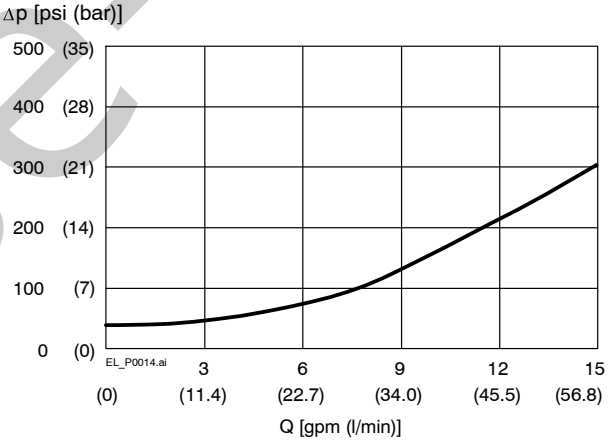

Δp = f (Q) Relief Characteristic [pw = 5000 psi]
restricted

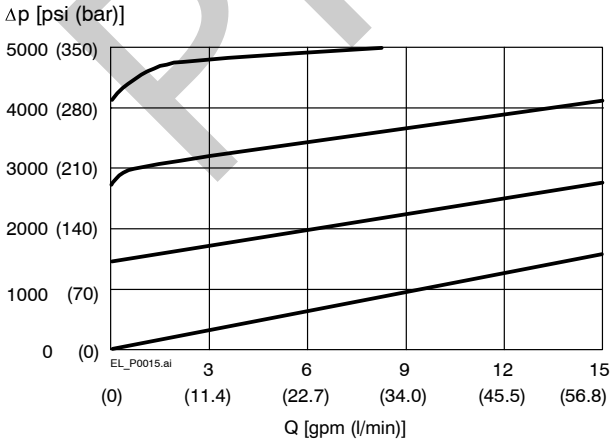

Δp = f (Q) Pressure drop - Flow rate characteristic
restricted

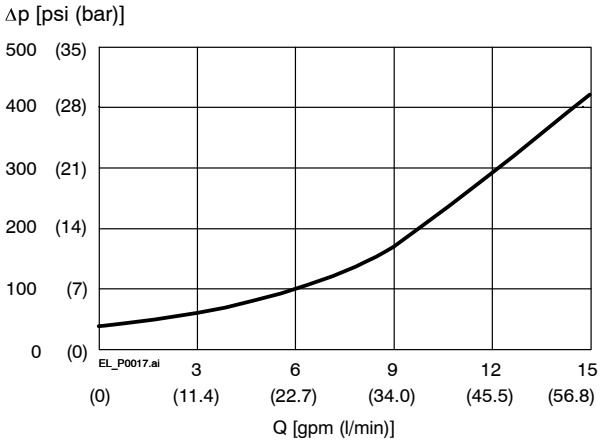

Phase-Out

5 Dimensions & sectional view

5.1 Insertion in cavity type “C1025”

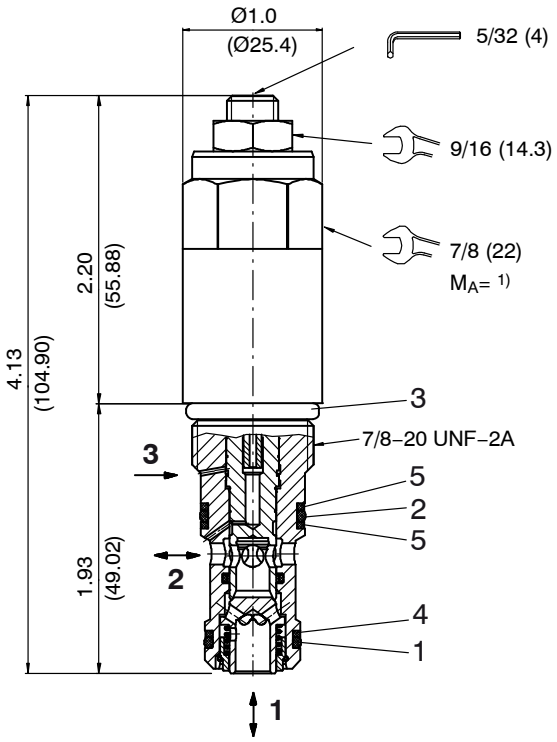

5.2 Insertion in cavity type “T-11A”

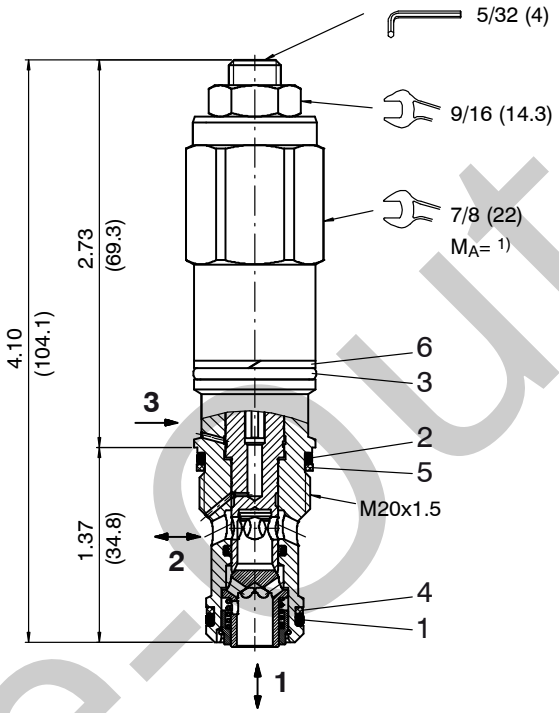

Tightening torque M_A 1)

Cavity type	C1025		T-11A	
When fitted in steel	55…60 ft-lbs	75…81 [Nm]	30…35 ft-lbs	40…47 [Nm]
When fitted in aluminum	35…40 ft-lbs	47…54 [Nm]	30…35 ft-lbs	40…47 [Nm]

Air bleeding with
capped adjustment screw “B”

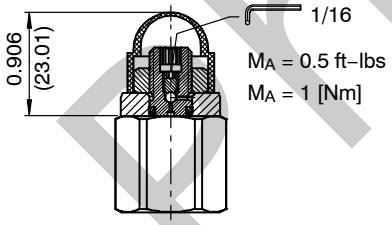

With capped adjustment screw “C” **

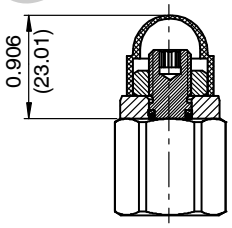

Adjusting screw with tamper-proof cap “T” **
(order separately in plain language)

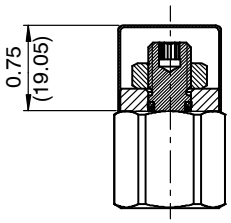

** recommended hanging or horizontal mounting position only.

Phase-out

WWW.SUMY.IR

6 Installation information

Seal kit NBR Nr. SKN-1028 [2)]

Item	Qty.	Description
1	1	O-ring no. 910 ∅ 0.755 x 0.097 N90
2	1	O-ring no. 016 ∅ 0.614 x 0.070 N70
3	1	O-ring Nr. 015 ∅ 0.551 x 0.070 N70
4	2	Backup ring ∅ 0.643 x 0.053 x .048
5	1	Backup ring ∅ 0.580 x 0.053 x .048

IMPORTANT!

2) Seal kit SKV-1028 (Viton "V")

Item no. 5207300016 = Seal kit NBR (Buna)

Item no. 5207300065 = Seal kit FKM (Viton)

Seal kit NBR Nr. SKN-1029 [3)]

Item	Qty.	Description
1	1	O-ring Nr. 015 ∅ 0.551 x 0.070 N70
2	1	O-ring no. 016 ∅ 0.614 x 0.070 N70
3	1	O-ring no. 017 ∅ 0.676 x 0.07 N70
4	1	Backup ring ∅ 0.580 x 0.053 x .048
5	2	Backup ring ∅ 0.697 x 0.052 x .047
6	2	Backup ring ∅ 0.750 x 0.054 x .048

IMPORTANT!

3) Seal kit SKV-1029 (Viton "V")

Item no. 52073000.. = Seal kit NBR (Buna)

Item no. 5207300066 = Seal kit FKM (Viton)

IMPORTANT!

When fitting the cartridges, use the specified tightening torque. The recommended relief pressure setting is 30 % above operating pressure.

ATTENTION!

Only qualified personnel with mechanical skills may carry out any maintenance work. Generally, the only work that should ever be undertaken is to check, and possibly replace, the seals. When changing seals, oil or grease the new seals thoroughly before fitting them.

Phase-Out

7 Ordering code

Ex. CBPP - 10 - N - S - 0 - 3.0 - 50 / __ - A

CBPP	=	counterbalance, non-vented, pilot assisted	
10	=	size SAE 10 / NG 8, cavity C1025	
20M	=	size SAE 10 / NG 8, cavity T-11A *	
N	=	NBR (Nitrile) seals (**standard**)	
V	=	FKM (Viton) seals (special seals - please consult BUCHER)	
S	=	adjustment screw **	
C	=	capped adjustment screw **	
T	=	tamperproof adjustment screw **	
B	=	air bleeding with capped adjustment screw	
0	=	cartridge only (**standard**) *	
03BA	=	line-mounting body G3/8 BSPP	aluminum
03BS	=	line-mounting body G3/8 BSPP	steel
04BA	=	line-mounting body G1/2 BSPP	aluminum
04BS	=	line-mounting body G1/2 BSPP	steel
08TA	=	line-mounting body SAE-#8	aluminum
08TS	=	line-mounting body SAE-#8	steel
10TA	=	line-mounting body SAE-#10	aluminum
10TS	=	line-mounting body SAE-#10	steel
1.5	=	pilot ratio 1.5 : 1 (on request)	
2.3	=	pilot ratio 2.3 : 1	
3.0	=	pilot ratio 3.0 : 1	
4.5	=	pilot ratio 4.5 : 1	
10	=	pilot ratio 10 : 1 (on request)	
15	=	pressure range 500 - 1500 psi (35 - 103 bar)	
30	=	pressure range 1000 - 3000 psi (70 - 207 bar)	
50	=	pressure range 1500 - 5000 psi (103 - 345 bar) (**standard**)	
without	=	without pressure setting (**standard**)	
…	=	pressure setting in 100 psi steps (setting value 100 psi = /1 or 500 psi = /5)	
A	=	opening pressure check valve 20 psi (1.4 bar) ***	
B	=	opening pressure check valve 5 psi (0.4 bar) ***	
C	=	opening pressure check valve 20 psi (1.4 bar), restricted (**standard**)	
D	=	opening pressure check valve 5 psi (0.4 bar), restricted	

* Cavity T-11A available as cartidge only. (no line-mouting body available)
** recommended hanging or horizontal mounting position only.
*** recommended up to 3000 psi or non-overcenter applications only.

8 Related data sheets

Reference	(Old no.)	Description
520-P-000050		Form tools
520-P-000220	(0–022.0)	Cavity type C1025
520-P-000221	(0–022.1)	Line-mounting body, 10 Series – 2.5-way (with C1025)

info.el@bucherhydraulics.com www.bucherhydraulics.com/commoncavity

© 2020 by Bucher Hydraulics, Inc., 2545 Northwest Parkway, Elgin, Illinois 60124, USA
All rights reserved.
Data is provided for the purpose of product description only, and must not be construed as warranted characteristics in the legal sense. The information does not relieve users from the duty of conducting their own evaluations and tests. Because the products are subject to continual improvement, we reserve the right to amend the product specifications contained in this catalogue.

Classification: 430.325.360.305.315

Phase-Out

BUCHER hydraulics

COUNTERBALANCE VALVE POPPET TYPE WITH FREE REVERSE FLOW & SEALS ON THE PISTON

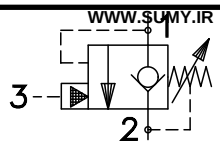

WWW.SUMY.IR

TORQUE:
Steel = 35/40 Ft–Lb. [47/54 Nm]
Aluminum = 25/30 Ft–Lb. [34/41 Nm]

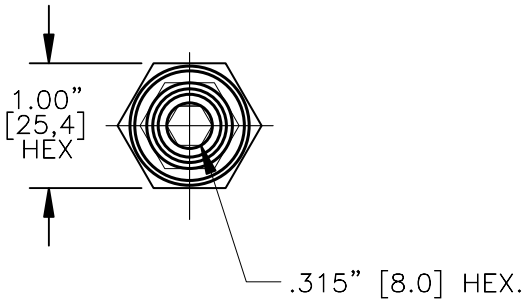

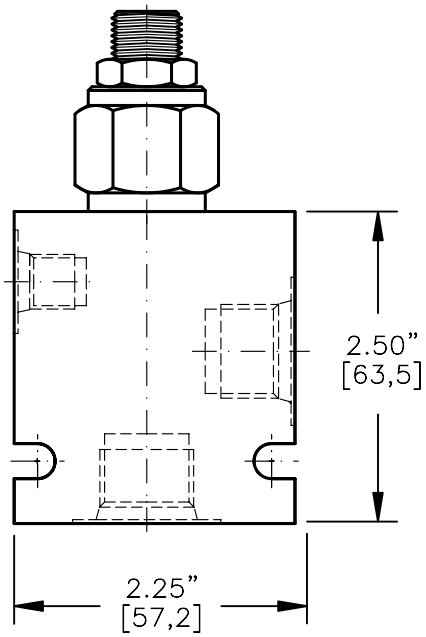

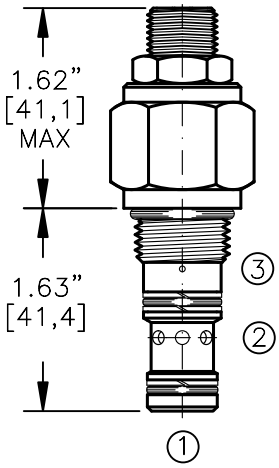

FOR ALUMINUM OR STEEL VALVE HOUSING CONFIGURATIONS SEE PAGE 0–021–1.

CBPS–08–X–X–X–XX

BASIC

SIZE
08 = 3/4"–16 UNF

SEALS
N = BUNA "N"
V = VITON

ADJUSTMENT
S = ADJUSTING SCREW
C = CAPPED
T = TAMPERPROOF
K = HANDKNOB
M = METAL HANDKNOB

PORTS
0 = CARTRIDGE ONLY
03BX = G 3/8" BSPP
08TX = SAE – #8
"A" – ALUM. HOUSING
"S" – STEEL HOUSING

PRESSURE RANGE
15 = 100 TO 1500 PSI
30 = 300 TO 3000 PSI
50 =1500 TO 5000 PSI

FOR ADJUSTMENT CONTROL OPTIONS SEE PAGE 0–050.0

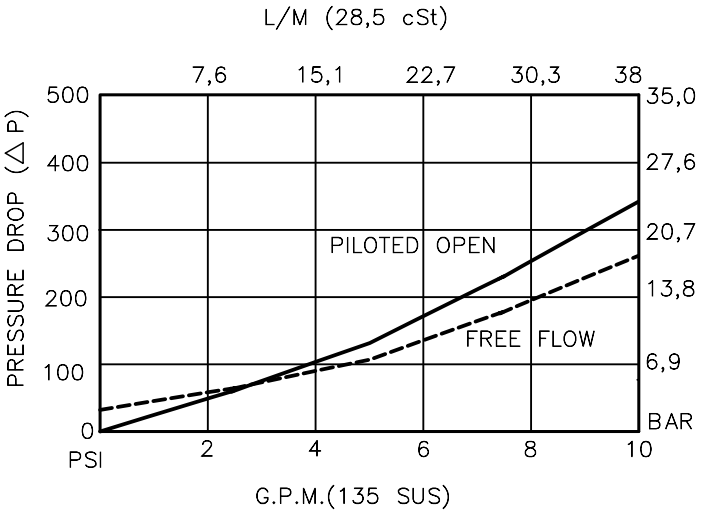

BUCHER hydraulics

WWW.SUMY.IR

COUNTERBALANCE VALVE POPPET TYPE WITH FREE REVERSE FLOW & SEALS ON THE PISTON.

DESCRIPTION

This unit is a DIRECT ACTING, SCREW IN CARTRIDGE STYLE, POPPET TYPE, ADJUSTABLE, PILOT ASSISTED, HYDRAULIC COUNTERBALANCE VALVE.

OPERATIONS

This valve controls moving load and preventing it from running ahead of the pump, locking the load in any position, it also provides static overload and thermal expansion protection.
This valve is a MODULATING DEVICE that allows free flow from port 2 to port 1 and then blocks reverse flow until a pilot pressure INVERSELY PROPORTIONAL to the load pressure is sensed at port 3 modulating flow from port 1 to port 2.

FEATURES AND BENEFITS

Leakproof screw adjustment.
Adjustment screw can not be backed out of the valve.
Overset protection – spring can not go solid.
Hardened precision fitted poppet & cage provides reliable, long life.
A unibody adapter cage construction provides very reliable operation.
Seals on the pilot piston assures no interflow of fluid between port #2 and port #3.
All external carbon steel parts are plated for longer life against the elements.
Valve is available with screw, tamperproof, capped and handknob adjustments.
All cartridge valves are 100% functionally tested.
Industry common cavity.

BUCHER hydraulics

WWW.SUMY.IR

COUNTERBALANCE VALVE POPPET TYPE WITH FREE REVERSE FLOW & SEALS ON THE PISTON.

SPECIFICATIONS

OPERATING PRESSURE: 5,000 PSI [350 Bar]
PROOF PRESSURE: 10,000 PSI [700 Bar]
FLOW: 10.0 GPM [38 L/M] nominal. See performance chart.
PILOT RATIO: 4 to 1
INTERNAL LEAKAGE: 5 drops/min @ 90% of crack pressure.^J
DEFINITION OF CRACK: evident at 0.06 GPM [0.25 LPM]
VALVE HOUSINGS: 2500 PSI [175 Bar] = Aluminum – Anodized.
5000 PSI [350 Bar] = Steel – Unplated.
OPERATING TEMPERATURE: –40° to +250° F. [–40° to +120° C.]
OPERATING MEDIA: All general purpose hydraulic fluids such as MIL–H–5606, SAE–#10, SAE–#20, etc.
INSTALLATION: No restriction.
FILTRATION: 25 microns or better.
SEAL KIT NUMBER: SKN–0828 for buna "N".
SKV–0828 for viton.
WEIGHT: 0.30 lb [.14 kg] cartridge only.
VALVE CAVITY: #C0825, See Page 0–021.0.

info.el@bucherhydraulics.com www.bucherhydraulics.com/commoncavity

© 2015 by Bucher Hydraulics, Inc., 2545 Northwest Parkway, Elgin, Illinois 60124, USA
All rights reserved.
The technical information in this catalog, may contain calculated figures (for reference only) and not actual performance data for this product. Data is provided for the purpose of product description only, and must not be construed as warranted characteristics in the legal sense. The information does not relieve users from the duty of conducting their own evaluations and tests. Because the products are subject to continual improvement, we reserve the right to amend the product specifications contained in this catalogue.

BUCHER hydraulics

COUNTERBALANCE VALVE POPPET TYPE, FREE REVERSE FLOW & SEALS ON THE PISTON.

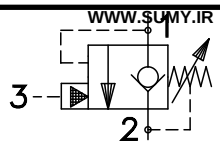

TORQUE:
Steel = 55/60 Ft–Lb. [74/81 Nm]
Aluminum = 35/40 Ft–Lb. [47/54 Nm]

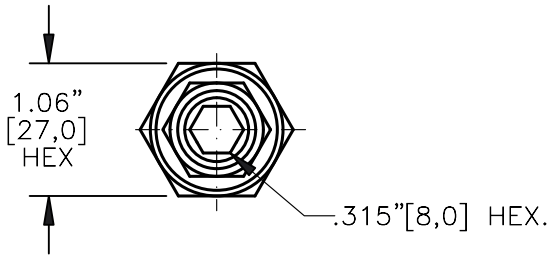

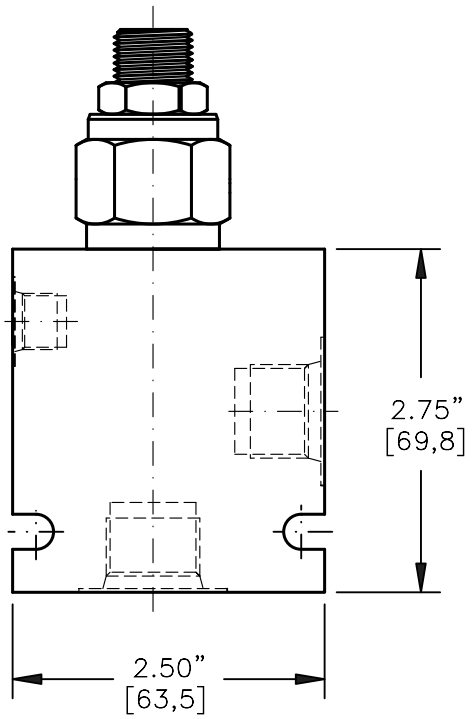

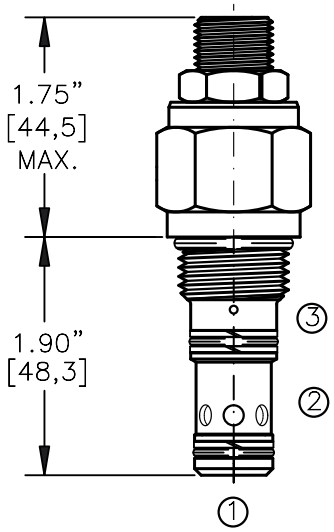

FOR ALUMINUM OR STEEL VALVE HOUSING CONFIGURATIONS SEE PAGE 0–022–1.

CBPS–10–X–X–X–XX

BASIC

SIZE
10 = 7/8"–14 UNF

SEALS
N = BUNA "N"
V = VITON

ADJUSTMENT
S = ADJUSTING SCREW
C = CAPPED
T = TAMPERPROOF
K = HANDKNOB
M = METAL HANDKNOB

PORTS
0 = CARTRIDGE ONLY
03BX = G 3/8" BSPP
04BX = G 1/2" BSPP
08TX = SAE – #8
10TX = SAE – #10
"A" – ALUM. HOUSING
"S" – STEEL HOUSING

PRESSURE RANGE
15 = 100 TO 1500 PSI
30 = 300 TO 3000 PSI
50 = 500 TO 5000 PSI

FOR ADJUSTMENT CONTROL OPTIONS SEE PAGE 0–050.0

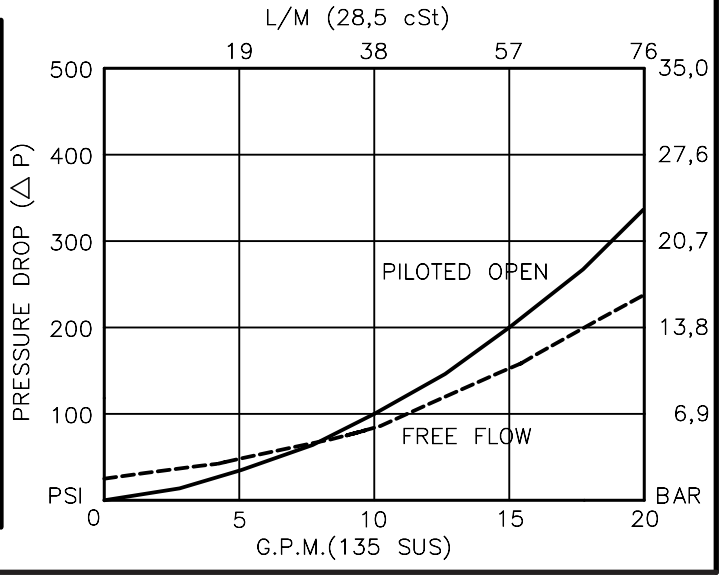

BUCHER hydraulics

WWW.SUMY.IR

COUNTERBALANCE VALVE POPPET TYPE WITH FREE REVERSE FLOW & SEALS ON THE PISTON.

DESCRIPTION

This unit is a DIRECT ACTING, SCREW IN CARTRIDGE STYLE, POPPET TYPE, ADJUSTABLE, PILOT ASSISTED, HYDRAULIC COUNTERBALANCE VALVE.

OPERATIONS

This valve controls moving load and preventing it from running ahead of the pump, locking the load in any position, it also provides static overload and thermal expansion protection.
This valve is a MODULATING DEVICE that allows free flow from port 2 to port 1 and then blocks reverse flow until a pilot pressure INVERSELY PROPORTIONAL to the load pressure is sensed at port 3 modulating flow from port 1 to port 2.

FEATURES AND BENEFITS

Leakproof screw adjustment.
Adjustment screw can not be backed out of the valve.
Overset protection – spring can not go solid.
Hardened precision fitted poppet & cage provides reliable, long life.
A unibody adapter cage construction provides very reliable operation.
Seals on the pilot piston assures no interflow of fluid between port #2 and port #3.

All external carbon steel parts are plated for longer life against the elements.
Valve is available with screw, tamperproof, capped and handknob adjustments.

All cartridge valves are 100% functionally tested.
Industry common cavity.

BUCHER hydraulics

WWW.SUMY.IR

COUNTERBALANCE VALVE POPPET TYPE WITH FREE REVERSE FLOW & SEALS ON THE PISTON.

SPECIFICATIONS

OPERATING PRESSURE: 5,000 PSI [350 Bar]
PROOF PRESSURE: 10,000 PSI [700 Bar]
FLOW: 20.0 GPM [76 L/M] nominal. See performance chart.
PILOT RATIO: 4 to 1
INTERNAL LEAKAGE: 5 drops/min @ 90% of crack pressure.^J
DEFINITION OF CRACK: evident at 0.06 GPM [0.25 LPM]
VALVE HOUSINGS: 2500 PSI [175 Bar] = Aluminum – Anodized.
5000 PSI [350 Bar] = Steel – Unplated.
OPERATING TEMPERATURE: –40° to +250° F. [–40° to +120° C.]
OPERATING MEDIA: All general purpose hydraulic fluids such as MIL–H–5606, SAE–#10, SAE–#20, etc.
INSTALLATION: No restriction.
FILTRATION: 25 microns or better.
SEAL KIT NUMBER: SKN–1028 for buna "N".
SKV–1028 for viton.
WEIGHT: 0.46 lb [.21 kg] cartridge only.
VALVE CAVITY: #C1025, See Page 0–022.0.

info.el@bucherhydraulics.com www.bucherhydraulics.com/commoncavity

© 2015 by Bucher Hydraulics, Inc., 2545 Northwest Parkway, Elgin, Illinois 60124, USA
All rights reserved.
The technical information in this catalog, may contain calculated figures (for reference only) and not actual performance data for this product. Data is provided for the purpose of product description only, and must not be construed as warranted characteristics in the legal sense. The information does not relieve users from the duty of conducting their own evaluations and tests. Because the products are subject to continual improvement, we reserve the right to amend the product specifications contained in this catalogue.

BUCHER hydraulics

COUNTERBALANCE VALVE POPPET TYPE, FREE REVERSE FLOW & SEALS ON THE PISTON

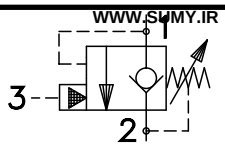

WWW.SUMY.IR

TORQUE:
Steel = 70/75 Ft–Lb. [95/102 Nm]
Aluminum = 55/60 Ft–Lb. [74/81 Nm]

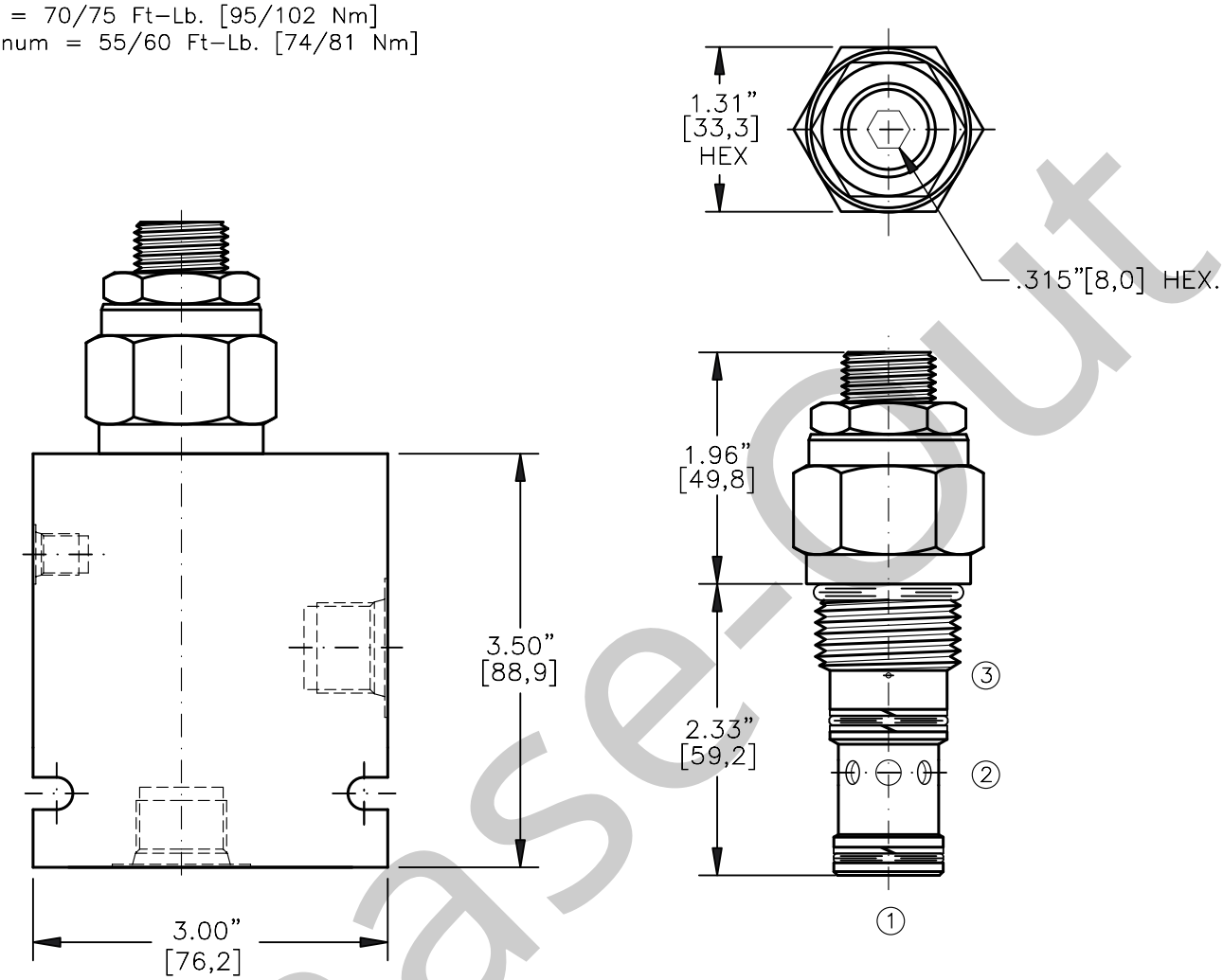

Phase-Out

FOR ALUMINUM OR STEEL VALVE HOUSING CONFIGURATIONS SEE PAGE 0–023–1.

CBPS–12–X–X–X–XX

BASIC

SIZE
12 = 1.062"–12 UNF

SEALS
N = BUNA "N"
V = VITON

ADJUSTMENT
S = ADJUSTING SCREW
C = CAPPED
T = TAMPERPROOF

PRESSURE RANGE
15 = 100 TO 1500 PSI
30 = 300 TO 3000 PSI
40 = 600 TO 4000 PSI

PORTS
0 = CARTRIDGE ONLY
04BX = G 1/2" BSPP
06BX = G 3/4" BSPP
10TX = SAE – #10
12TX = SAE – #12

"A" – ALUM. HOUSING
"S" – STEEL HOUSING

FOR ADJUSTMENT CONTROL OPTIONS SEE PAGE 0–050.0

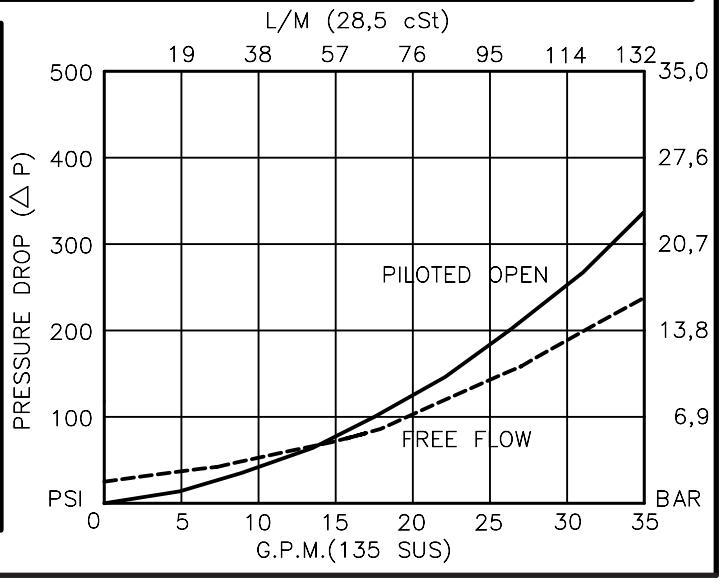

BUCHER hydraulics

WWW.SUMY.IR

COUNTERBALANCE VALVE POPPET TYPE WITH FREE REVERSE FLOW & SEALS ON THE PISTON.

DESCRIPTION

This unit is a DIRECT ACTING, SCREW IN CARTRIDGE STYLE, POPPET TYPE, ADJUSTABLE, PILOT ASSISTED, HYDRAULIC COUNTERBALANCE VALVE.

OPERATIONS

This valve controls moving load and preventing it from running ahead of the pump, locking the load in any position, it also provides static overload and thermal expansion protection.
This valve is a MODULATING DEVICE that allows free flow from port 2 to port 1 and then blocks reverse flow until a pilot pressure INVERSELY PROPORTIONAL to the load pressure is sensed at port 3 modulating flow from port 1 to port 2.

FEATURES AND BENEFITS

Leakproof screw adjustment.
Adjustment screw can not be backed out of the valve.
Overset protection – spring can not go solid.
Hardened precision fitted poppet & cage provides reliable, long life.
A unibody adapter cage construction provides very reliable operation.
Seals on the pilot piston assures no interflow of fluid between port #2 and port #3.
All external carbon steel parts are plated for longer life against the elements.
Valve is available with screw, tamperproof and capped adjustments.
All cartridge valves are 100% functionally tested.

SPECIFICATIONS

OPERATING PRESSURE: 4,000 PSI [276 Bar]
PROOF PRESSURE: 10,000 PSI [700 Bar]
FLOW: 35.0 GPM [132 L/M] nominal. See performance chart.
PILOT RATIO: 4 to 1
INTERNAL LEAKAGE: 5 drops/min @ 90% of crack pressure.^J
DEFINITION OF CRACK: evident at 0.06 GPM [0.25 LPM]
VALVE HOUSINGS: 2500 PSI [175 Bar] = Aluminum – Anodized.
5000 PSI [350 Bar] = Steel – Unplated.
OPERATING TEMPERATURE: –40° to +250° F. [–40° to +120° C.]
OPERATING MEDIA: All general purpose hydraulic fluids such as MIL–H–5606, SAE–#10, SAE–#20, etc.
INSTALLATION: No restriction.
FILTRATION: 25 microns or better.
SEAL KIT NUMBER: SKN–1228 for Buna "N".
SKV–1228 for Viton.
WEIGHT: 0.84 lb [0,38 kg] cartridge only.
VALVE CAVITY: #C1225, See Page 0–023.0.

info.el@bucherhydraulics.com www.bucherhydraulics.com/commoncavity

© 2015 by Bucher Hydraulics, Inc., 2545 Northwest Parkway, Elgin, Illinois 60124, USA
All rights reserved.
The technical information in this catalog, may contain calculated figures (for reference only) and not actual performance data for this product. Data is provided for the purpose of product description only, and must not be construed as warranted characteristics in the legal sense. The information does not relieve users from the duty of conducting their own evaluations and tests. Because the products are subject to continual improvement, we reserve the right to amend the product specifications contained in this catalogue.

Phase-Out

BUCHER hydraulics

COUNTERBALANCE VALVE POPPET TYPE, FREE REVERSE FLOW & SEALS ON THE PILOT PISTON

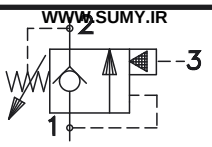

FITS INTO SUN CAVITY # T–11A

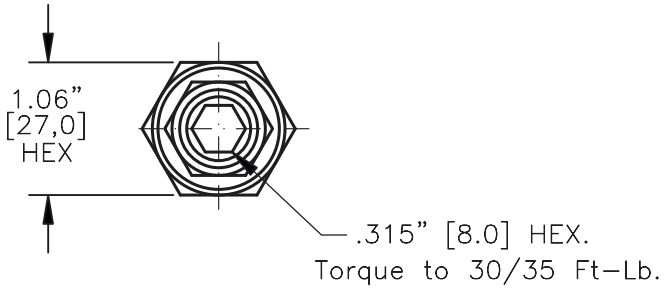

Turn screw clockwise to increase the pressure setting.

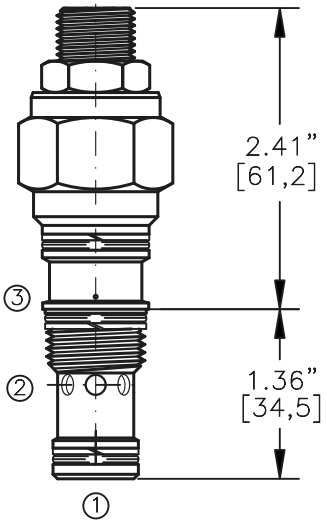

CBPS–20M–X–X–X–XX

BASIC

SIZE
20M=20,0x1,5MM THD.

SEALS
N = BUNA "N"
V = VITON

ADJUSTMENT
S = ADJUSTING SCREW
C = CAPPED
T = TAMPERPROOF
K = HANDKNOB
M = METAL HANDKNOB

PORTS
0 = CARTRIDGE ONLY

PRESSURE RANGE
15 = 100 TO 1500 PSI
30 = 300 TO 3000 PSI
50 = 500 TO 5000 PSI

FOR ADJUSTMENT CONTROL OPTIONS SEE PAGE 0–050.0

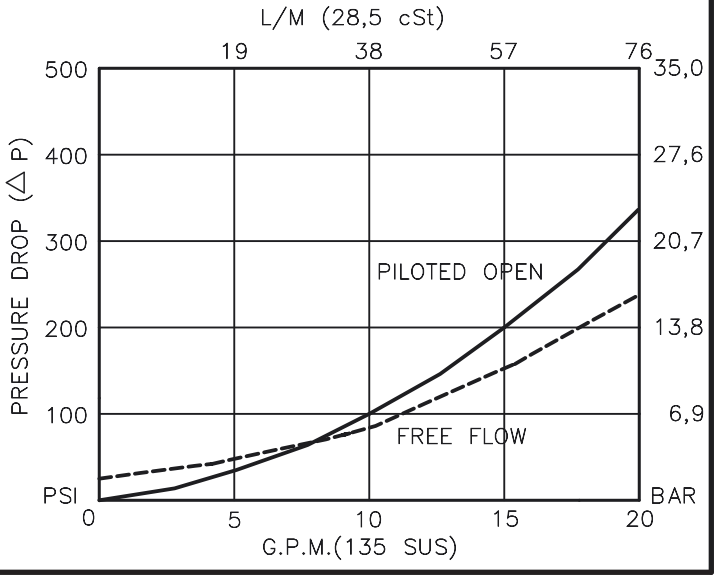

BUCHER hydraulics

WWW.SUMY.IR

COUNTERBALANCE VALVE POPPET TYPE, FREE REVERSE FLOW & SEALS ON THE PILOT PISTON.

DESCRIPTION

This unit is a DIRECT ACTING, SCREW IN CARTRIDGE STYLE, POPPET TYPE, ADJUSTABLE, PILOT ASSISTED, HYDRAULIC COUNTERBALANCE VALVE.

OPERATIONS

This valve controls moving load and preventing it from running ahead of the pump, locking the load in any position, it also provides static overload and thermal expansion protection.
This valve is a MODULATING DEVICE that allows free flow from port 2 to port 1 and then blocks reverse flow until a pilot pressure INVERSELY PROPORTIONAL to the load pressure is sensed at port 3 modulating out flow from port 1 to port 2.

FEATURES AND BENEFITS

Leakproof screw adjustment.
Adjustment screw can not be backed out of the valve.
Overset protection – spring can not go solid.
Hardened precision fitted poppet & cage provides reliable, long life.
A unibody adapter cage construction provides very reliable operation.
Seals on the pilot piston assures no flow of fluid between port #2 and port #3.
All external carbon steel parts are plated for longer life against the elements.
Valve is available with screw, tamperproof, capped and handknob adjustments.
All cartridge valves are 100% functionally tested.
Fits in to SUN cavity # T–11A.

SPECIFICATIONS

OPERATING PRESSURE: 5,000 PSI [350 Bar]
PROOF PRESSURE: 10,000 PSI [700 Bar]
FLOW: 20.0 GPM [76 L/M] nominal. See performance chart.
PILOT RATIO: 4 to 1
INTERNAL LEAKAGE: 5 drops/min @ 90% of crack pressure.^J
DEFINITION OF CRACK: evident at 0.06 GPM [0.25 LPM]
OPERATING TEMPERATURE: –40° to +250° F. [–40° to +120° C.]
OPERATING MEDIA: All general purpose hydraulic fluids such as MIL–H–5606, SAE–#10, SAE–#20, etc.
INSTALLATION: No restriction.
FILTRATION: 25 microns or better.
SEAL KIT NUMBER: SKN–1029 for buna "N".
SKV–1029 for viton.
WEIGHT: 0.46 lb [.21 kg] cartridge only.
VALVE CAVITY: SUN # T–11A.

info.el@bucherhydraulics.com www.bucherhydraulics.com/commoncavity

© 2015 by Bucher Hydraulics, Inc., 2545 Northwest Parkway, Elgin, Illinois 60124, USA
All rights reserved.
The technical information in this catalog, may contain calculated figures (for reference only) and not actual performance data for this product. Data is provided for the purpose of product description only, and must not be construed as warranted characteristics in the legal sense. The information does not relieve users from the duty of conducting their own evaluations and tests. Because the products are subject to continual improvement, we reserve the right to amend the product specifications contained in this catalogue.

BUCHER hydraulics

COUNTERBALANCE VALVE POPPET TYPE WITH FREE REVERSE FLOW & VENTED PISTON

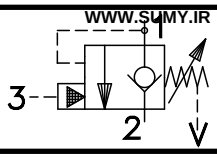

WWW.SUMY.IR

TORQUE:
Steel = 35/40 Ft–Lb. [47/54 Nm]
Aluminum = 25/30 Ft–Lb. [34/41 Nm]

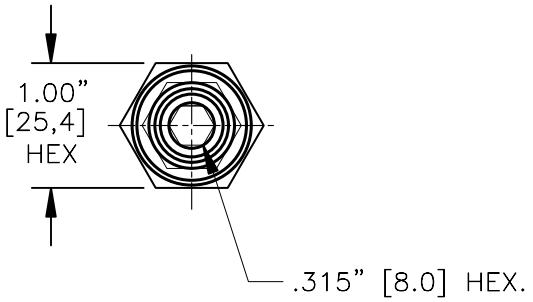

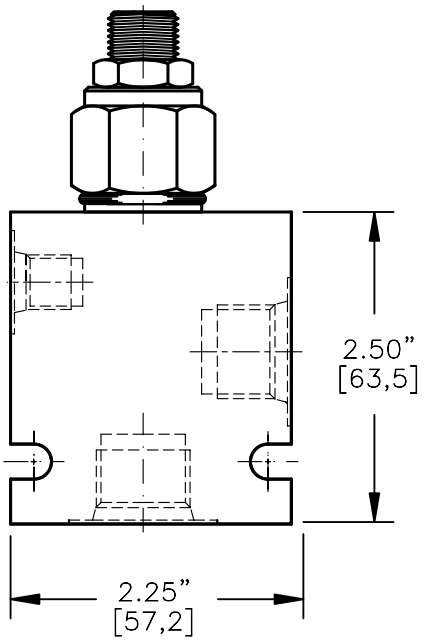

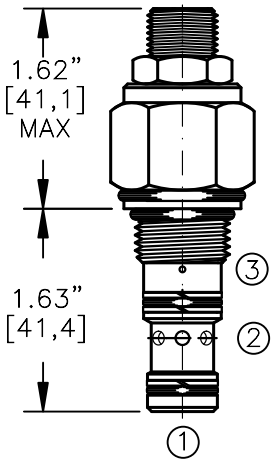

FOR ALUMINUM OR STEEL VALVE HOUSING CONFIGURATIONS SEE PAGE 0–021–1.

CBPG–08–X–X–X–XX

BASIC

SIZE
08 = 3/4"–16 UNF

SEALS
N = BUNA "N"
V = VITON

ADJUSTMENT
S = ADJUSTING SCREW
C = CAPPED
T = TAMPERPROOF
K = HANDKNOB
M = METAL HANDKNOB

PORTS
0 = CARTRIDGE ONLY
03BX = G 3/8" BSPP
08TX = SAE – #8
"A" – ALUM. HOUSING
"S" – STEEL HOUSING

PRESSURE RANGE
15 = 100 TO 1500 PSI
30 = 300 TO 3000 PSI
50 = 1500 TO 5000 PSI

FOR ADJUSTMENT CONTROL OPTIONS SEE PAGE 0–050.0

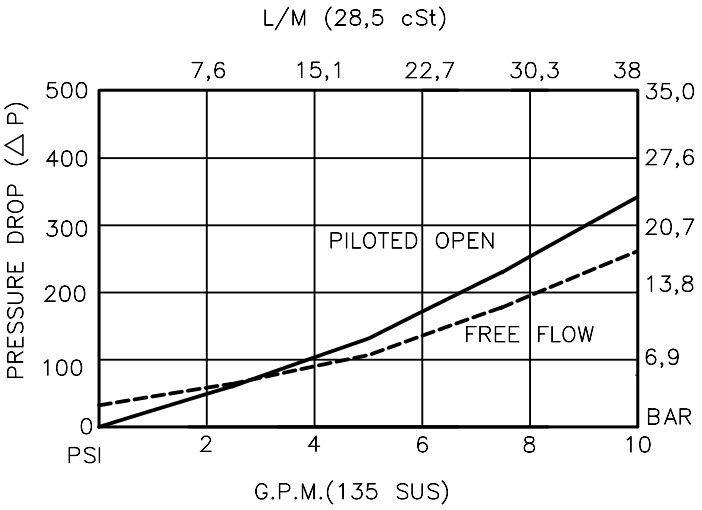

BUCHER hydraulics

WWW.SUMY.IR

COUNTERBALANCE VALVE POPPET TYPE WITH FREE REVERSE FLOW & VENTED PISTON

DESCRIPTION

This unit is a DIRECT ACTING, SCREW IN CARTRIDGE STYLE, POPPET TYPE, ADJUSTABLE, PILOT ASSISTED, HYDRAULIC COUNTERBALANCE VALVE.

OPERATIONS

This valve controls moving load and preventing it from running ahead of the pump, locking the load in any position, it also provides static overload and thermal expansion protection.
This valve is a MODULATING DEVICE that allows free flow from port 2 to port 1 and then blocks reverse flow until a pilot pressure INVERSELY PROPORTIONAL to the load pressure is sensed at port 3 modulating flow from port 1 to port 2.

FEATURES AND BENEFITS

Leakproof screw adjustment.
Adjustment screw can not be backed out of the valve.
Overset protection – spring can not go solid.
Hardened precision fitted poppet & cage provides reliable, long life.
A unibody adapter cage construction provides very reliable operation.
Seals on the pilot piston assures no interflow of fluid between port #2 and port #3.
All external carbon steel parts are plated for longer life against the elements.
Valve is available with screw, tamperproof, capped and handknob adjustments.
All cartridge valves are 100% functionally tested.
Industry common cavity.

BUCHER hydraulics

WWW.SUMY.IR

COUNTERBALANCE VALVE POPPET TYPE WITH FREE REVERSE FLOW & VENTED PISTON

SPECIFICATIONS

OPERATING PRESSURE: 5,000 PSI [350 Bar]
PROOF PRESSURE: 10,000 PSI [700 Bar]
FLOW: 10.0 GPM [38 L/M] nominal. See performance chart.
PILOT RATIO: 4 to 1
INTERNAL LEAKAGE: 5 drops/min @ 90% of crack pressure.^J
DEFINITION OF CRACK: evident at 0.06 GPM [0.25 LPM]
VALVE HOUSINGS: 2500 PSI [175 Bar] = Aluminum – Anodized.
5000 PSI [350 Bar] = Steel – Unplated.
OPERATING TEMPERATURE: –40° to +250° F. [–40° to +120° C.]
OPERATING MEDIA: All general purpose hydraulic fluids such as MIL–H–5606, SAE–#10, SAE–#20, etc.
INSTALLATION: No restriction.
FILTRATION: 25 microns or better.
SEAL KIT NUMBER: SKN–0828 for buna "N".
SKV–0828 for viton.
WEIGHT: 0.30 lb [.14 kg] cartridge only.
VALVE CAVITY: #C0825, See Page 0–021.0.

info.el@bucherhydraulics.com www.bucherhydraulics.com/commoncavity

© 2015 by Bucher Hydraulics, Inc., 2545 Northwest Parkway, Elgin, Illinois 60124, USA
All rights reserved.
The technical information in this catalog, may contain calculated figures (for reference only) and not actual performance data for this product. Data is provided for the purpose of product description only, and must not be construed as warranted characteristics in the legal sense. The information does not relieve users from the duty of conducting their own evaluations and tests. Because the products are subject to continual improvement, we reserve the right to amend the product specifications contained in this catalogue.

BUCHER hydraulics

COUNTERBALANCE VALVE POPPET TYPE, WITH FREE REVERSE FLOW & VENTED PISTON

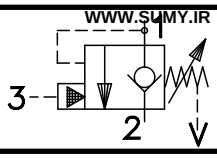

TORQUE:
Steel = 55/60 Ft–Lb. [74/81 Nm]
Aluminum = 35/40 Ft–Lb. [47/54 Nm]

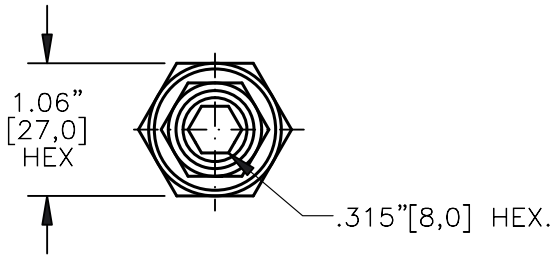

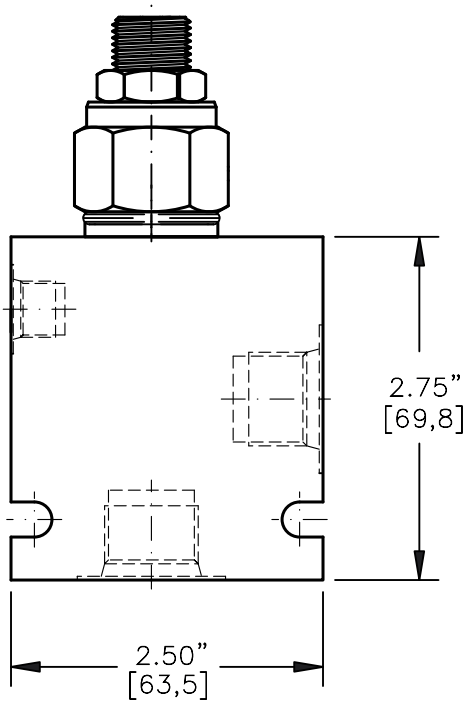

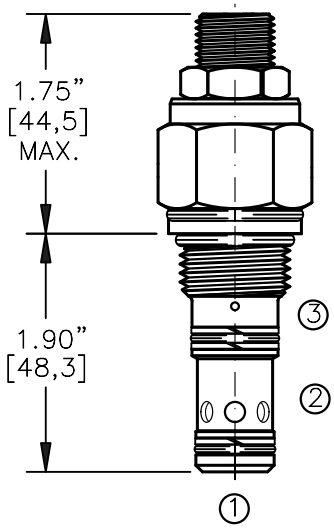

FOR ALUMINUM OR STEEL VALVE HOUSING CONFIGURATIONS SEE PAGE 0–022–1.

CBPG–10–X–X–X–XX

BASIC

SIZE
10 = 7/8"–14 UNF

SEALS
N = BUNA "N"
V = VITON

ADJUSTMENT
S = ADJUSTING SCREW
C = CAPPED
T = TAMPERPROOF
K = HANDKNOB
M = METAL HANDKNOB

PORTS
0 = CARTRIDGE ONLY
03BX = G 3/8" BSPP
04BX = G 1/2" BSPP
08TX = SAE – #8
10TX = SAE – #10
"A" – ALUM. HOUSING
"S" – STEEL HOUSING

PRESSURE RANGE
15 = 100 TO 1500 PSI
30 = 300 TO 3000 PSI
50 = 500 TO 5000 PSI

FOR ADJUSTMENT CONTROL OPTIONS SEE PAGE 0–050.0

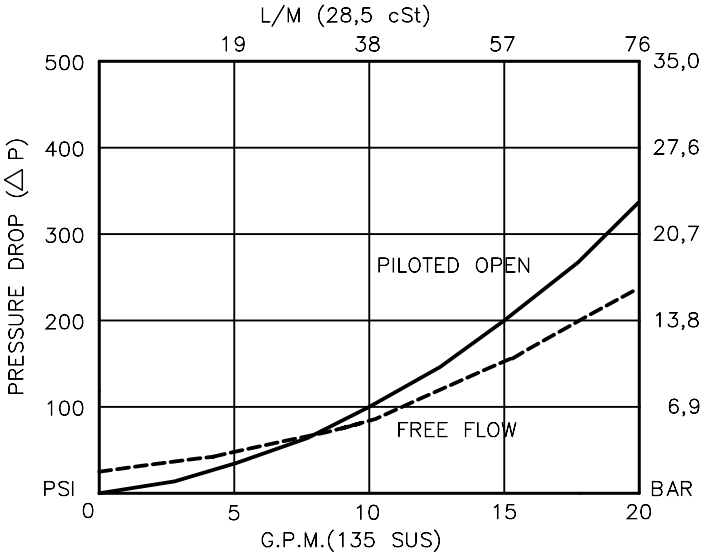

BUCHER hydraulics

WWW.SUMY.IR

COUNTERBALANCE VALVE POPPET TYPE, WITH FREE REVERSE FLOW & VENTED PISTON.

DESCRIPTION

This unit is a DIRECT ACTING, SCREW IN CARTRIDGE STYLE, POPPET TYPE, ADJUSTABLE, PILOT ASSISTED, HYDRAULIC COUNTERBALANCE VALVE.

OPERATIONS

This valve controls moving load and preventing it from running ahead of the pump, locking the load in any position, it also provides static overload and thermal expansion protection.
This valve is a MODULATING DEVICE that allows free flow from port 2 to port 1 and then blocks reverse flow until a pilot pressure INVERSELY PROPORTIONAL to the load pressure is sensed at port 3 modulating flow from port 1 to port 2.

FEATURES AND BENEFITS

Leakproof screw adjustment.
Adjustment screw can not be backed out of the valve.
Overset protection – spring can not go solid.
Hardened precision fitted poppet & cage provides reliable, long life.
A unibody adapter cage construction provides very reliable operation.
Vented pilot piston spring chamber to atmosphere allows this valve to be used with a closed center valve or re–generative circuit.
All external carbon steel parts are plated for longer life against the elements.
Valve is available with screw, tamperproof, capped and handknob adjustments.

All cartridge valves are 100% functionally tested.
Industry common cavity.

BUCHER hydraulics

WWW.SUMY.IR

COUNTERBALANCE VALVE POPPET TYPE, WITH FREE REVERSE FLOW & VENTED PISTON.

SPECIFICATIONS

OPERATING PRESSURE: 5,000 PSI [350 Bar]
PROOF PRESSURE: 10,000 PSI [700 Bar]
FLOW: 20.0 GPM [76 L/M] nominal. See performance chart.
PILOT RATIO: 4 to 1
INTERNAL LEAKAGE: 5 drops/min @ 90% of crack pressure.^J
DEFINITION OF CRACK: evident at 0.06 GPM [0.25 LPM]
VALVE HOUSINGS: 2500 PSI [175 Bar] = Aluminum – Anodized.
5000 PSI [350 Bar] = Steel – Unplated.
OPERATING TEMPERATURE: –40° to +250° F. [–40° to +120° C.]
OPERATING MEDIA: All general purpose hydraulic fluids such as MIL–H–5606, SAE–#10, SAE–#20, etc.
INSTALLATION: No restriction.
FILTRATION: 25 microns or better.
SEAL KIT NUMBER: SKN–1028 for buna "N".
SKV–1028 for viton.
WEIGHT: 0.46 lb [.21 kg] cartridge only.
VALVE CAVITY: #C1025, See Page 0–022.0.

info.el@bucherhydraulics.com

www.bucherhydraulics.com/commoncavity

© 2015 by Bucher Hydraulics, Inc., 2545 Northwest Parkway, Elgin, Illinois 60124, USA
All rights reserved.
The technical information in this catalog, may contain calculated figures (for reference only) and not actual performance data for this product. Data is provided for the purpose of product description only, and must not be construed as warranted characteristics in the legal sense. The information does not relieve users from the duty of conducting their own evaluations and tests. Because the products are subject to continual improvement, we reserve the right to amend the product specifications contained in this catalogue.

BUCHER hydraulics

COUNTERBALANCE VALVE POPPET TYPE, FREE REVERSE FLOW & SEALS ON THE PISTON

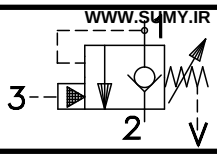

TORQUE:
Steel = 70/75 Ft–Lb. [95/102 Nm]
Aluminum = 55/60 Ft–Lb. [74/81 Nm]

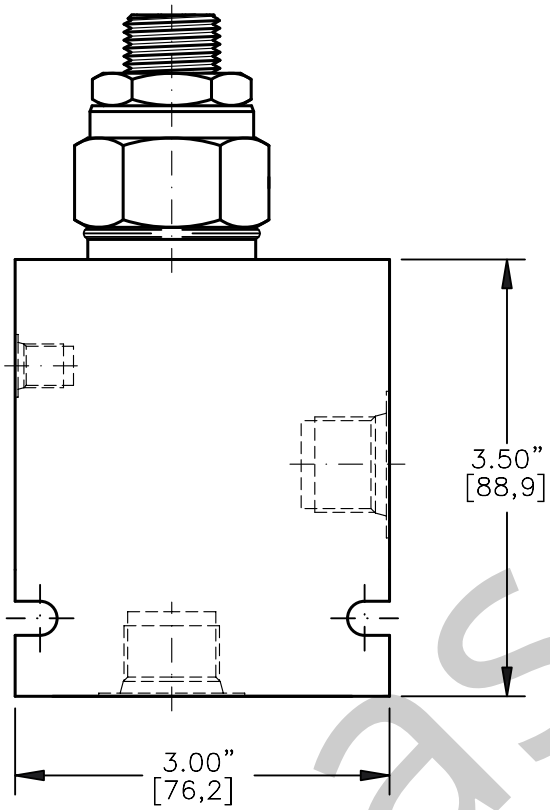

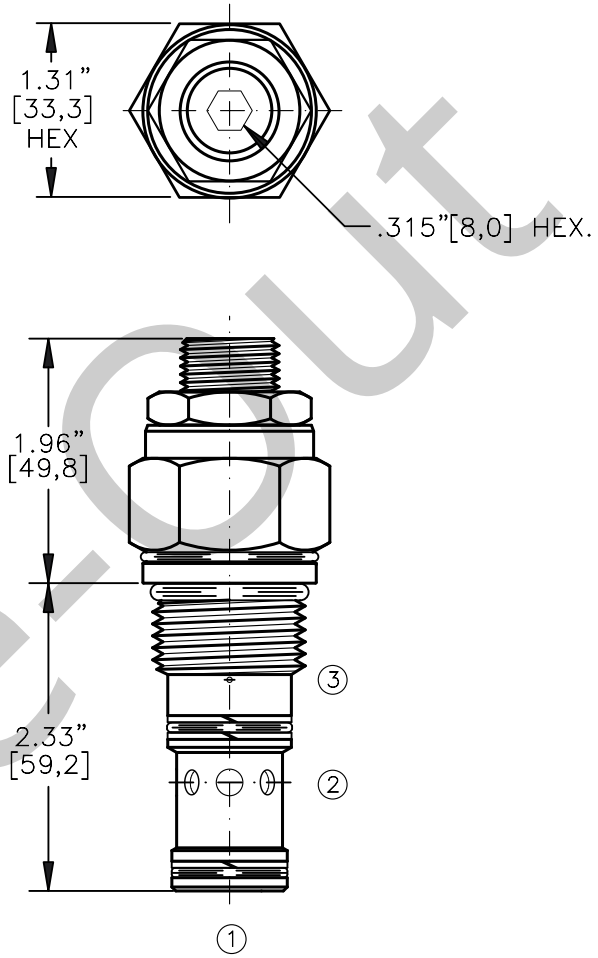

FOR ALUMINUM OR STEEL VALVE HOUSING CONFIGURATIONS SEE PAGE 0–023–1.

CBPG–12–X–X–X–XX

BASIC

SIZE
12 = 1.062"–12 UNF

SEALS
N = BUNA "N"
V = VITON

ADJUSTMENT
S = ADJUSTING SCREW
C = CAPPED
T = TAMPERPROOF

PRESSURE RANGE
15 = 100 TO 1500 PSI
30 = 300 TO 3000 PSI
40 = 600 TO 4000 PSI

PORTS
0 = CARTRIDGE ONLY
04BX = G 1/2" BSPP
06BX = G 3/4" BSPP
10TX = SAE – #10
12TX = SAE – #12

"A" – ALUM. HOUSING
"S" – STEEL HOUSING

FOR ADJUSTMENT CONTROL OPTIONS SEE PAGE 0–050.0

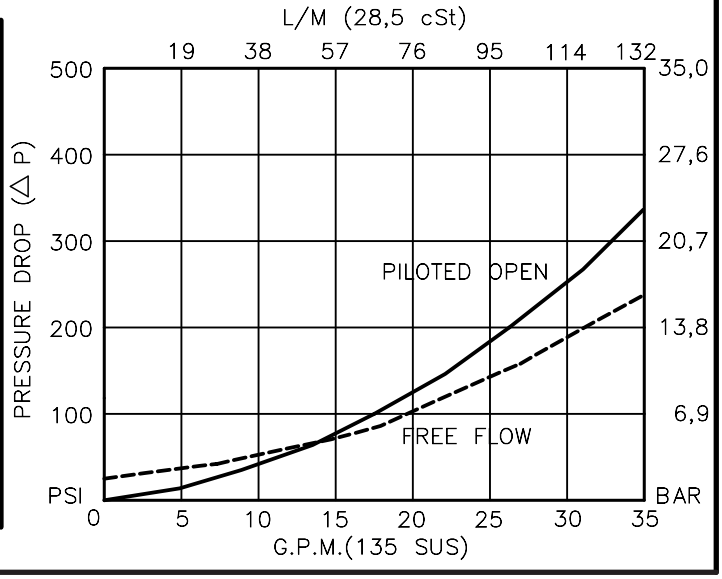

Phase-Out

BUCHER hydraulics

WWW.SUMY.IR

COUNTERBALANCE VALVE POPPET TYPE, WITH FREE REVERSE FLOW & VENTED PISTON

DESCRIPTION

This unit is a DIRECT ACTING, SCREW IN CARTRIDGE STYLE, POPPET TYPE, ADJUSTABLE, PILOT ASSISTED, HYDRAULIC COUNTERBALANCE VALVE.

OPERATIONS

This valve controls moving load and preventing it from running ahead of the pump, locking the load in any position, it also provides static overload and thermal expansion protection.
This valve is a MODULATING DEVICE that allows free flow from port 2 to port 1 and then blocks reverse flow until a pilot pressure INVERSELY PROPORTIONAL to the load pressure is sensed at port 3 modulating flow from port 1 to port 2.

FEATURES AND BENEFITS

Leakproof screw adjustment.
Adjustment screw can not be backed out of the valve.
Overset protection – spring can not go solid.
Hardened precision fitted poppet & cage provides reliable, long life.
A unibody adapter cage construction provides very reliable operation.
Vented pilot piston spring chamber to atmosphere allows this valve to be used with a re–generative circuit.
All external carbon steel parts are plated for longer life against the elements.
Valve is available with screw, tamperproof and capped adjustments.
All cartridge valves are 100% functionally tested.

Phase-Out

BUCHER hydraulics

WWW.SUMY.IR

COUNTERBALANCE VALVE POPPET TYPE, WITH FREE REVERSE FLOW & VENTED PISTON

SPECIFICATIONS

OPERATING PRESSURE: 4,000 PSI [276 Bar]
PROOF PRESSURE: 10,000 PSI [700 Bar]
FLOW: 35.0 GPM [132 L/M] nominal. See performance chart.
PILOT RATIO: 4 to 1
INTERNAL LEAKAGE: 5 drops/min @ 90% of crack pressure.^J
DEFINITION OF CRACK: evident at 0.06 GPM [0.25 LPM]
VALVE HOUSINGS: 2500 PSI [175 Bar] = Aluminum – Anodized.
5000 PSI [350 Bar] = Steel – Unplated.
OPERATING TEMPERATURE: –40° to +250° F. [–40° to +120° C.]
OPERATING MEDIA: All general purpose hydraulic fluids such as MIL–H–5606, SAE–#10, SAE–#20, etc.
INSTALLATION: No restriction.
FILTRATION: 25 microns or better.
SEAL KIT NUMBER: SKN–1228 for Buna "N".
SKV–1228 for Viton.
WEIGHT: 0.84 lb [0,38 kg] cartridge only.
VALVE CAVITY: #C1225, See Page 0–023.0.

Phase-Out

info.el@bucherhydraulics.com www.bucherhydraulics.com/commoncavity

© 2015 by Bucher Hydraulics, Inc., 2545 Northwest Parkway, Elgin, Illinois 60124, USA
All rights reserved.
The technical information in this catalog, may contain calculated figures (for reference only) and not actual performance data for this product. Data is provided for the purpose of product description only, and must not be construed as warranted characteristics in the legal sense. The information does not relieve users from the duty of conducting their own evaluations and tests. Because the products are subject to continual improvement, we reserve the right to amend the product specifications contained in this catalogue.

BUCHER hydraulics

COUNTERBALANCE VALVE POPPET TYPE, WITH FREE REVERSE FLOW & VENTED PISTON.

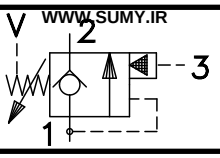

WWW.SUMY.IR

FITS INTO SUN CAVITY # T–11A

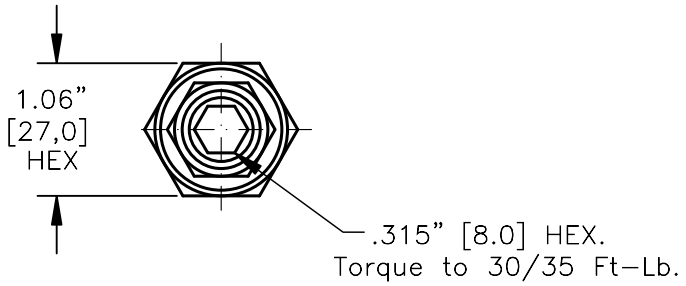

Turn screw clockwise to increase the pressure setting.

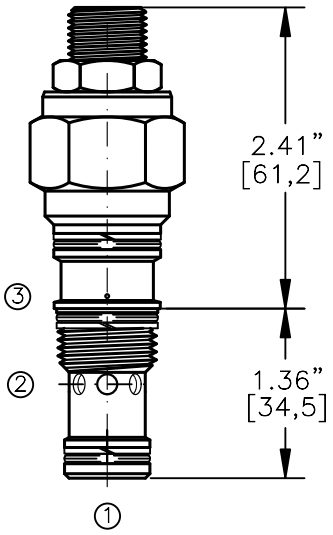

CBPG–20M–X–X–X–XX

BASIC

SIZE
20M = 20,0x1,5MM THD.

SEALS
N = BUNA "N"
V = VITON

ADJUSTMENT
S = ADJUSTING SCREW
C = CAPPED
T = TAMPERPROOF
K = HANDKNOB
M = METAL HANDKNOB

PORTS
0 = CARTRIDGE ONLY

PRESSURE RANGE
15 = 100 TO 1500 PSI
30 = 300 TO 3000 PSI
50 = 500 TO 5000 PSI

FOR ADJUSTMENT CONTROL OPTIONS SEE PAGE 0–050.0

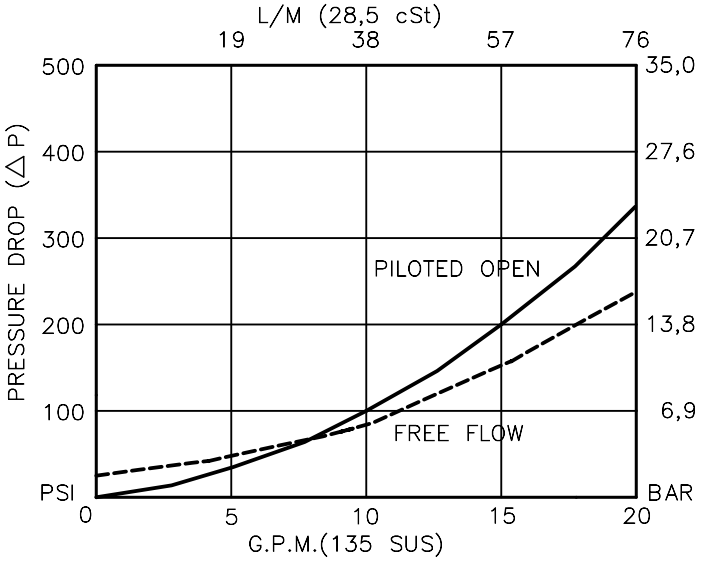

BUCHER hydraulics

WWW.SUMY.IR

COUNTERBALANCE VALVE POPPET TYPE, WITH FREE REVERSE FLOW & VENTED PISTON.

DESCRIPTION

This unit is a DIRECT ACTING, SCREW IN CARTRIDGE STYLE, POPPET TYPE, ADJUSTABLE, PILOT ASSISTED, HYDRAULIC COUNTERBALANCE VALVE.

OPERATIONS

This valve controls moving load and preventing it from running ahead of the pump, locking the load in any position, it also provides static overload and thermal expansion protection.
This valve is a MODULATING DEVICE that allows free flow from port 2 to port 1 and then blocks reverse flow until a pilot pressure INVERSELY PROPORTIONAL to the load pressure is sensed at port 3 modulating out flow from port 1 to port 2.

FEATURES AND BENEFITS

Leakproof screw adjustment.
Adjustment screw can not be backed out of the valve.
Overset protection – spring can not go solid.
Hardened precision fitted poppet & cage provides reliable, long life.
A unibody adapter cage construction provides very reliable operation.
Vented pilot piston spring chamber to atmosphere allows this valve to be used with a re–generative circuit.
All external carbon steel parts are plated for longer life against the elements.
Valve is available with screw, tamperproof, capped and handknob adjustments.
All cartridge valves are 100% functionally tested.
Fits in to SUN cavity # T–11A.

SPECIFICATIONS

OPERATING PRESSURE: 5,000 PSI [350 Bar]
PROOF PRESSURE: 10,000 PSI [700 Bar]
FLOW: 20.0 GPM [76 L/M] nominal. See performance chart.
PILOT RATIO: 4 to 1
INTERNAL LEAKAGE: 5 drops/min @ 90% of crack pressure.^J
DEFINITION OF CRACK: evident at 0.06 GPM [0.25 LPM]
OPERATING TEMPERATURE: –40° to +250° F. [–40° to +120° C.]
OPERATING MEDIA: All general purpose hydraulic fluids such as MIL–H–5606, SAE–#10, SAE–#20, etc.
INSTALLATION: No restriction.
FILTRATION: 25 microns or better.
SEAL KIT NUMBER: SKN–1029 for buna "N".
SKV–1029 for viton.
WEIGHT: 0.46 lb [.21 kg] cartridge only.
VALVE CAVITY: SUN # T–11A.

info.el@bucherhydraulics.com www.bucherhydraulics.com/commoncavity

© 2015 by Bucher Hydraulics, Inc., 2545 Northwest Parkway, Elgin, Illinois 60124, USA
All rights reserved.
The technical information in this catalog, may contain calculated figures (for reference only) and not actual performance data for this product. Data is provided for the purpose of product description only, and must not be construed as warranted characteristics in the legal sense. The information does not relieve users from the duty of conducting their own evaluations and tests. Because the products are subject to continual improvement, we reserve the right to amend the product specifications contained in this catalogue.

BUCHER hydraulics

WWW.SUMY.IR

Check valve
Pilot operated check

Q_{max} = 50 l/min, p_{max} = 450 bar
hydraulical operation (proportional), pilot operated, poppet type
Type series: ERV 8-A-C-PH-...

- Screw-in cartridge valve
- All external parts with zinc-nickel coating according to DIN EN ISO 19598
- Load pressure closing cone poppet valve
- Proportional, pilot operated
- Seat tight shut-off
- Hardened, ground seat section on seat bore and spool
- Compact construction
- With rust water sealing for recessed installation

Description

The proportional, pilot-operated check valves, series ERV 8-_-C-PH-..., are pilot controlled, high performance screw-in valves with an M30x1.5 mounting thread size 8. They are designed on the poppet/seat principle and the B to A flow path is therefore virtually leak-free. The check function can be controlled proportionally by applying a suitable pilot pressure at port X (pilot pressure x pilot ratio). In the A to B direction, flow can pass freely through the screw-in valves (opening pressure = 4.0 bar). All external parts of the screw-in valves are zinc-nickel plated and are thus suitable for use in the harshest operating environments. These screw-in valves are predominantly used in certain mobile and industrial applications to maintain the position of loaded actuators (e.g. outrigger cylinders) after the pump pressure has been disconnected.

Symbol

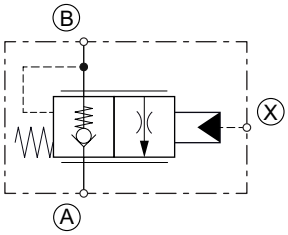

Technical Data

General Characteristics	Description, value, unit
Function group	Check valve
Function	Pilot operated check
Design	Screw-in cartridge valve
Controls	hydraulical operation (proportional)
Characteristic	pilot operated, poppet type
Construction size	size 8
Thread size	M30×1,5
Mounting attitude	unrestricted
Weight	0.33 kg
Tightening torque steel	100 Nm
Tightening torque tolerance	± 10 %
Minimum ambient temperature	- 25 °C
Maximum ambient temperature	+ 100 °C
Surface protection	All external parts with zinc-nickel coating according to DIN EN ISO 19598
Available seal types	several seal types available, see ordering code
Seal kit order number	NBR: 30003008540 / FKM: 30003038560 / MIL: 30003018810

NOTE!
Supplement to surface corrosion protection:
cartridge housing burnished

Hydraulic Characteristics	Description, value, unit
Maximum operating pressure	450 bar
Restriction of the operating pressure	max. static pressure: 600 bar
Maximum flow rate	50 l/min
Flow direction	see symbol
Hydraulic fluid	HL and HLP mineral oil according to DIN 51 524; other fluids on request!
Minimum fluid temperature	- 20 °C
Maximum fluid temperature	+ 80 °C
Viscosity range	2.8 ... 1500 mm^2/s (cSt)
Recommended viscosity range	10 ... 380 mm^2/s (cSt)
Minimum fluid cleanliness (cleanlineless class according to ISO 4406:1999)	class 20/17/14
Effective hydraulic pilot ratio (p.o. check valve)	1:2.56
Opening pressure	flow direction A to B: 4.0 bar

ATTENTION!
The valve is not damped. The actuation time is determined by the directional control valve. Increase in pressure over 3500 bar/s are not allowed!

NOTE!
The leak-free nature of the valve depends largely on the degree of cleanliness of the hydraulic fluid.

Performance graphs

measured with oil viscosity 33.0 mm²/s (cSt)

Δp = f (Q) Pressure drop-flow rate characteristic

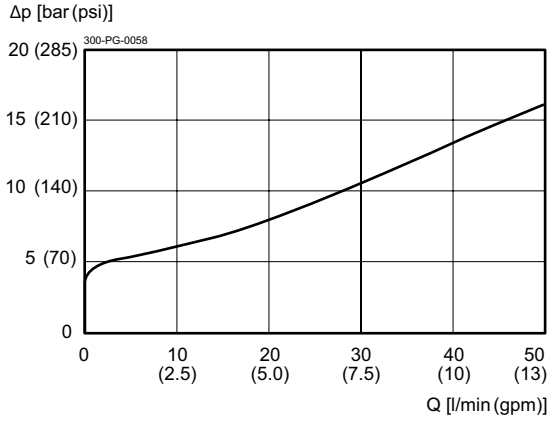

Lifting function, flow direction A to B

Δp = f (Q) Pressure drop-flow rate characteristic

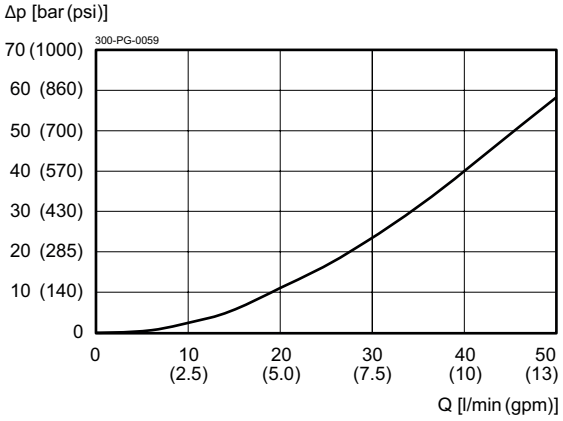

Lowering function at fully operated,
flow direction B to A

p = f (Q) Pressure-flow rate

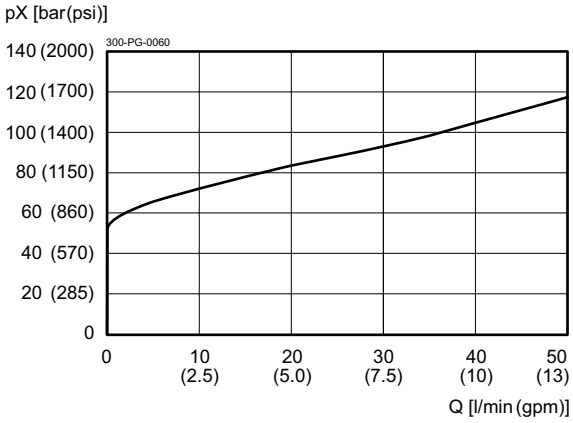

pX at constant 100 bar load pressure

Dimensions and sectional view

Beispiel für die Masseinheit:
Example for the dimensional units:

0.79 = 0.79 mm millimeter
(.031) = 0.031" inch

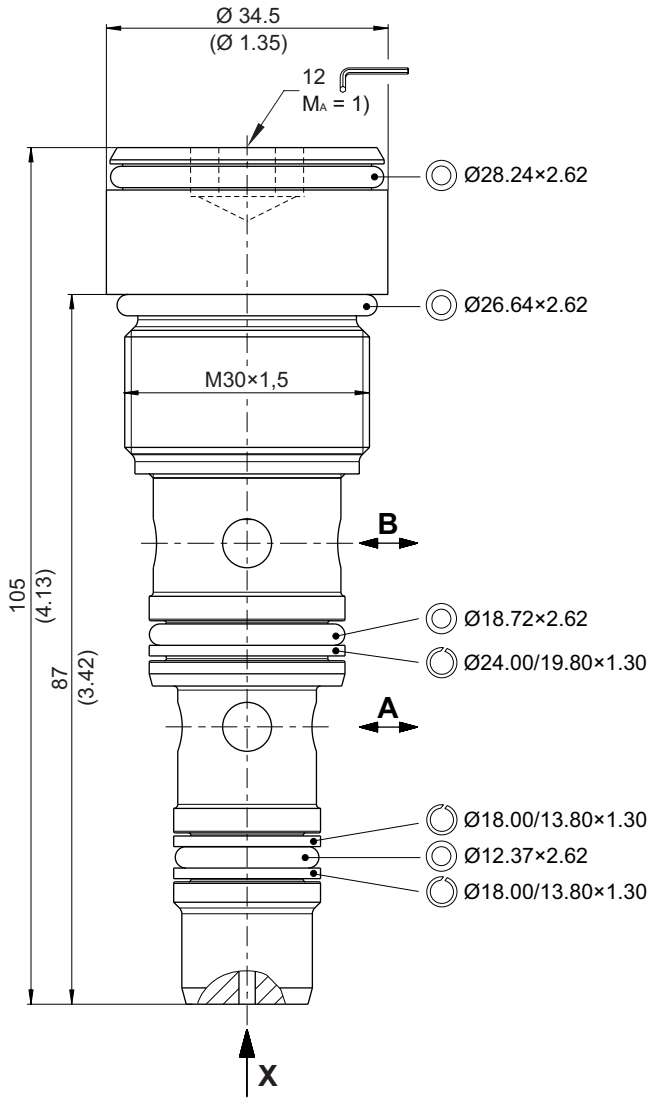

Installation information

ATTENTION!
This product is intended for use on the outrigger cylinder of a mobile working machine. Other applications are to be clarified with the valve manufacturer.

NOTE!
It is recommended to carry out a leak test during the acceptance test of the device.

NOTE!
A pressure relief valve must be used to protect the secondary circuit against overpressure.

NOTE!
1) When fitting the screw-in cartridge valve, use the specified tightening torque. The value can be found in the chapter "Technical data".

NOTE!
The seals are not available individually. The seal kit order number can be found in the chapter "Technical data".

ATTENTION!
Only qualified personnel with mechanical skills may carry out any maintenance work. Generally, the only work that should ever be undertaken is to check, and possibly replace, the seals. When changing seals, oil or grease the new seals thoroughly before fitting them.

Cavity

Beispiel für die Masseinheit:
Example for the dimensional units:
0.79 = 0.79 mm millimeter

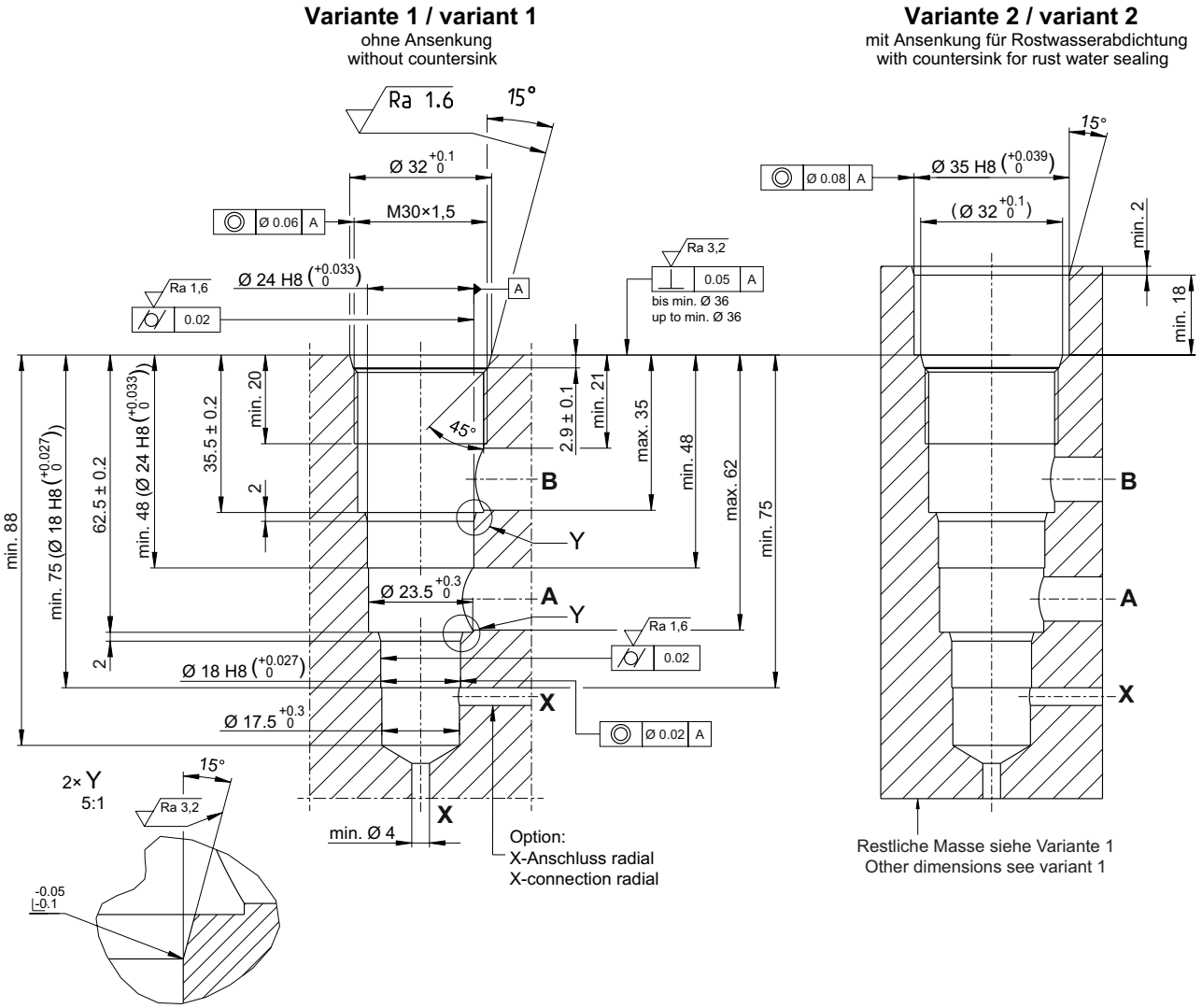

HINWEIS!
NOTE!

Empfohlene Anschlussbohrungen: A, B: Ø 10
Recommended connection bores: X: Ø 4

Toleranzen nach:
Tolerances according to: DIN ISO 2768-mK

Ra 6,3 (√) -0.1 -0.2 +0.2 +0.1

ATTENTION!
A mounting cavity not in conformity with the drawing can lead to jamming of the moving parts in the screw-in valve.

NOTE!
You must maintain the specified positional and diametral tolerances. To ensure trouble-free operation of the screw-in cartridges, we strongly recommend that pilot drilling, boring, reaming and cavity thread-cutting are always performed in one setup.

Ordering code

Ex. ERV 8 - A - C - PH - 450 - N

ERV	=	pilot operated check valve
8	=	size 8
A	=	design / version
C	=	cartridge design
PH	=	proportional-hydraulic
450	=	max. permissible operating pressure (450 bar)
N	=	NBR (nitril-butadien-rubber / BUNA) seals *(standard)*
V	=	FKM (fluorocarbon rubber / VITON) seals
T	=	MIL (low temperature) seals *(special seals - please consult BUCHER)*

info.ch@bucherhydraulics.com **www.bucherhydraulics.com**

© 2021 by Bucher Hydraulics AG, 6345 Neuheim, Switzerland

All rights reserved.
Data is provided for the purpose of product description only, and must not be construed as warranted characteristics in the legal sense. The information does not relieve users from the duty of conducting their own evaluations and tests. Because the products are subject to continual improvement, we reserve the right to amend the product specifications contained in this catalogue.

Leak-Free Load-Control Cartridge Valve, Size 6

Q_{max} = 50 l/min (13 gpm), p_{max} = 420 bar (6000 psi)
leak-proof, pilot operated, cartridge design
Series BBV 6 C-...

- Compact design for cavity type according to Bucher standard – M42x1.5
- Two-stage load-control valve and bypass check valve are functionally combined in one coaxial valve assembly
- Leak-free load holding
- The load pressure has very little influence on the pilot pressure required → area ratio 1:66
- Guaranteed closing force for the load-control assembly → reliable shut-off even with a broken spring
- Thanks to the various pilot control styles, the valve can always be adapted to the system requirements
- Hardened, ground and lapped seat valve components ensure permanent leaktightness and long service life
- All external parts with zinc-nickel coating according to DIN EN ISO 19598

1 Description

Leak-Free load-control valves in this series prevent hydraulic actuators from running ahead of the available oil supply. In one valve, they combine the functions of load-holding, safety and pipe-rupture protection.
These hydraulic load-control cartridge valves from the series BBV 6 C-… are size 6, pilot operated, high performance screw-in cartridges with an M42x1.5 mounting thread. They are ideally suited for use in high-pressure applications up to 420 bar (6000 psi). Thanks to the various pilot control variants, the cartridge can be optimally adapted to the system requirements. The compact design allows for minimum installation space. All external parts of the cartridge are zinc-nickel plated, and are thus suitable for use in the harshest operating environments. The screw-in cartridges mainly used in mobile and stationary applications (e.g. for speed control of cylinders, hydraulic motors or on the luffing mechanisms).

2 Symbol

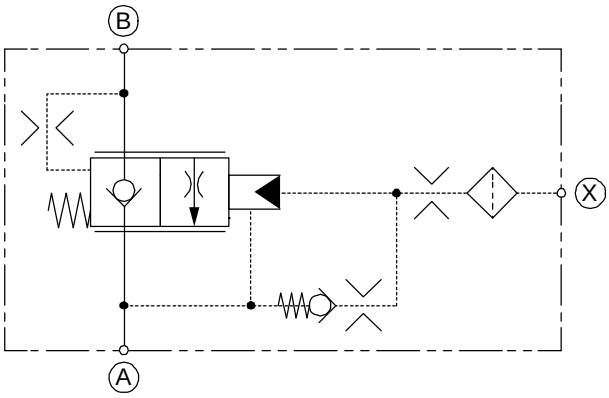

WWW.SUMY.IR

3 Technical data

General characteristics		Description, value, unit	
Designation		leak-free load-control cartridge valve	
Design		leak-proof, hydraulically pilot operated, cartridge design	
Size		size 6	
Mounting method		screw-in cartridge – M42x1.5	
Tightening torque		250 Nm ± 10 %	(184.4 ft-lbs ± 10)
Main ports Control port	A, B X	Ø 8 mm Ø 4 mm	(Ø .314 inch) (Ø .157 inch)
Weight		0.7…0.8 kg	(1.54…1.76 lbs)
Mounting attitude		unrestricted	
Ambient temperature range		-25 °C … +80 °C (others on application)	(-13 °F … +176 °F)
Surface corrosion protection		all external parts with zinc-nickel coating according to DIN EN ISO 19598	

Hydraulic characteristics		Description, value, unit	
Maximum operating pressure		420 bar	(6000 psi)
Maximum pressure at port B (static)		600 bar	(8700 psi)
Maximum flow rate		50 l/min	(13 gpm)
Flow direction		A → B, free flow through check valve B → A, controlled flow	
Operator type		hydraulic proportional	
Opening pilot ratio		1:66	
Hydraulic fluid		HL and HLP mineral oil to DIN 51 524; for other fluids, please contact BUCHER	
Hydraulic fluid temperature range		- 25 °C … + 80 °C	(-13 °F … +176 °F)
Temperature rating of seals	NBR FKM MIL	- 25 °C … + 100 °C - 20 °C … + 200 °C - 55 °C … + 80 °C	(-13 °F … +212 °F) (-4 °F … +392 °F) (-67 °F … +176 °F)
Viscosity range		2.8…1500 mm^2/s (cSt), recommended 10…380 mm^2/s (cSt)	
Minimum fluid cleanliness Cleanliness class to ISO 4406 : 1999		class 20/17/14	

4 Construction and function

4.1 Neutral position (load pressure at B, ports A and X depressurized)

In the neutral position, there is zero leakage from B → A. The valve is held closed by the check valve spring, which acts the pilot valve ball and thus on the control spool, and also by the load pressure, which acts on the rear side of the pilot valve ball and the control spool.

4.2 Check valve function (flow from A → B)

To raise the actuator, pump pressure is applied via port A to the valve seat area of the control spool and causes the control spool together with the pilot ball to open, pushing against the check valve spring. Due to the small effective area of the pilot ball, when the control spool moves in the opening direction during the check valve function the pilot ball moves with it, and does not lift from its seat in the spool.

4.3 Lowering function (flow from B → A)

Initial decompression

The pilot pressure at port X moves the pilot piston in opposition to the pilot spring, lifting the pilot ball from its seat in the control spool. The load pressure behind the control spool now decays as it escapes past the pilot ball seat to port A.

Opening the control spool

With further increase in the pilot pressure, the pilot piston compresses the pilot spring still more. It then makes direct contact with the control spool and pushes it open aigainst the check valve spring.
The pilot pressure acting on the pilot piston therefore controls the open metering area of the control spool, and consequently the flow rate from B → A.

Damping

The system can be protected against oscillations by using suitable damping orifices. The effect of the bypass orifice from X → A is to make it necessary to use higher pilot pressures (pressure divider function) and this improves the damping behaviour.
The orifices are protected against contamination by a mesh filter at port X and a check valve that prevents flow from A.

5 Performance graphs

measured with oil viscosity 33 mm^2/s (cSt)

Δp = f (Q) Pressure drop - Flow rate characteristic
Check valve function, A → B

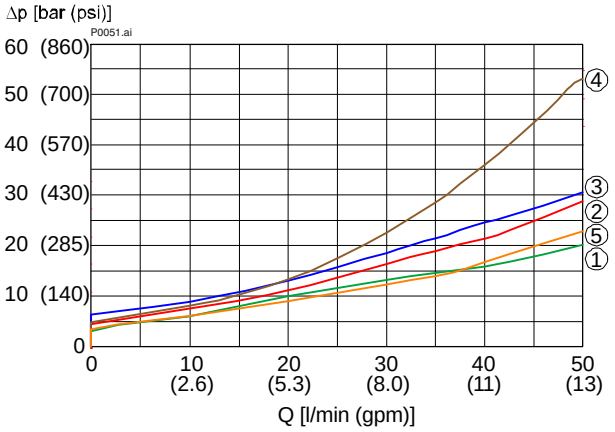

Δp = f (Q) Pressure drop - Flow rate characteristic
Lowering function, B → A, fully open

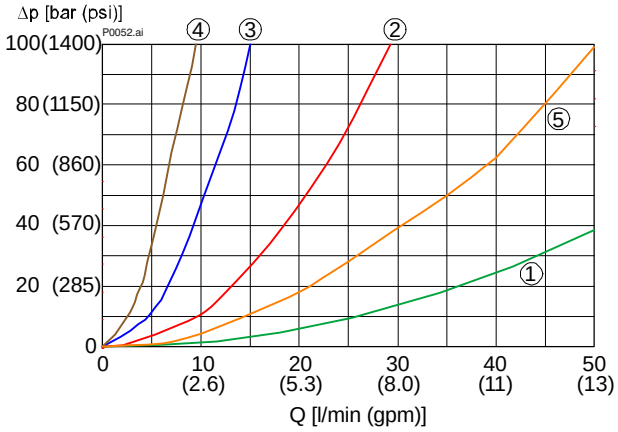

p = f (Q) Pressure - Flow rate characteristic
Pilot pressure pX @ 200 bar load pressure, B → A
(with damping orifice, without bypass orifice)

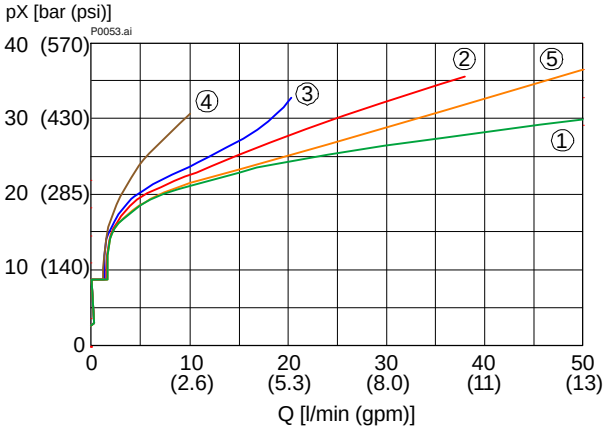

Legend:
(applies to all characteristic curves)

1	piston type 4SL
2	piston type 4FS
3	piston type 4FL
4	piston type 2FL
5	piston type 8FS

5.1 Orifice names

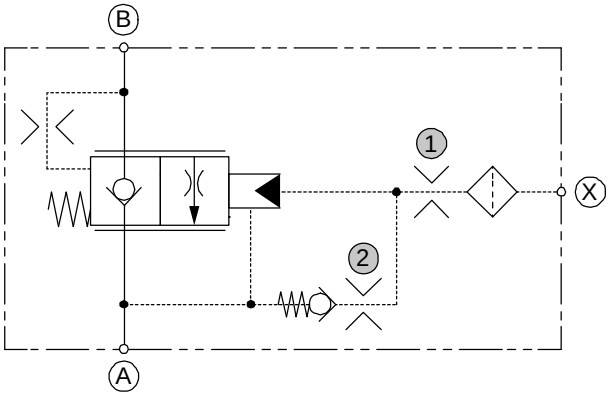

1	damping orifice
2	bypass orifice

5.2 Table of opening pressures

Opening pressure at 200 bar load pressure (theoretical values).

pX pre-opening [bar / (psi)]	pX start of opening [bar / (psi)]	pX fully open [bar / (psi)]	Bypass orifice [mm]	damping orifice [mm]
9.0 / (130.5)	16.0 / (232.0)	33.0 / (478.6)	Ø 0.00	Ø 0.25…0.40
12.0 / (174.0)	21.0 / (304.5)	45.0 / (652.6)	Ø 0.30	Ø 0.40
14.0 / (203.0)	25.0 / (362.5)	52.5 / (761.4)	Ø 0.30	Ø 0.35
14.0 / (203.0)	25.0 / (362.5)	54.0 / (783.2)	Ø 0.35	Ø 0.40
18.0 / (261.0)	32.0 / (464.1)	67.5 / (979.0)	Ø 0.30	Ø 0.30
18.0 / (261.0)	32.0 / (464.1)	67.5 / (979.0)	Ø 0.35	Ø 0.35
18.0 / (261.0)	32.0 / (464.1)	67.5 / (979.0)	Ø 0.40	Ø 0.40
23.0 / (333.5)	42.0 / (609.1)	88.5 / (1283.5)	Ø 0.45	Ø 0.40
24.0 / (348.0)	43.0 / (623.6)	91.5 / (1327.0)	Ø 0.40	Ø 0.35
26.0 / (377.0)	46.0 / (667.1)	97.5 / (1414.1)	Ø 0.35	Ø 0.30
34.0 / (493.1)	60.0 / (870.2)	126.0 / (1827.4)	Ø 0.45	Ø 0.35
37.0 / (536.6)	67.0 / (971.7)	141.0 / (2045.0)	Ø 0.40	Ø 0.30
54.0 / (783.2)	97.0 / (1406.8)	205.5 / (2980.5)	Ø 0.45	Ø 0.30

IMPORTANT!:
The opening pressure can be adjusted to the system by changing the orifices.

IMPORTANT!:
Further orifice combinations available in consultation with Bucher Hydraulics.

6 Dimensions & sectional view

Example for the dimensional units:
0.79 = 0.79 mm [millimeter]
(.031) = 0.031“ [inch]

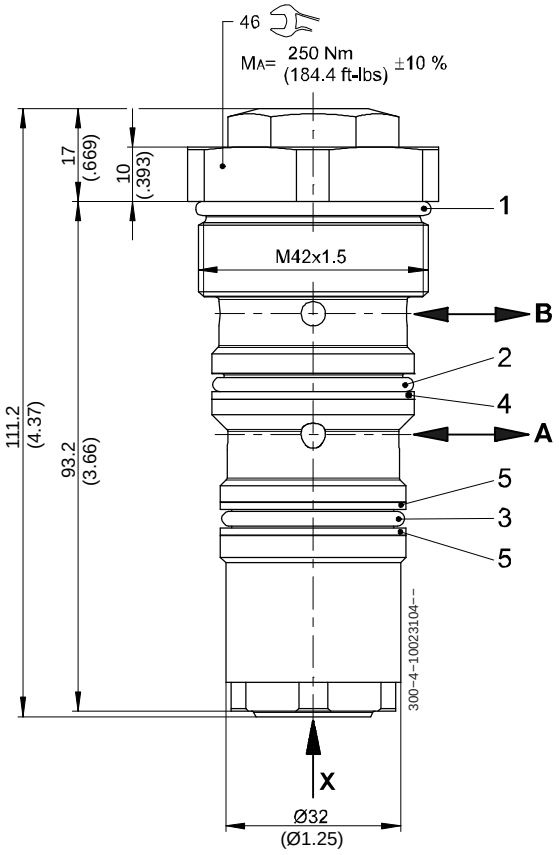

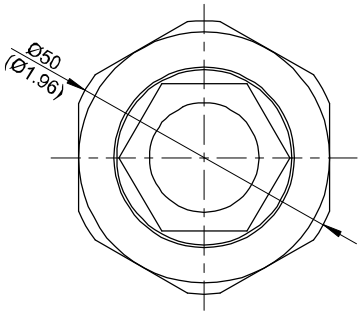

Item	Qty.	Description	
1	1	O-Ring	∅ 37.77 x 2.62
2	1	O-Ring	∅ 31.42 x 2.62
3	1	O-Ring	∅ 28.24 x 2.62
4	1	Backup ring	∅ 37.00 / 32.80 x 1.30
5	2	Backup ring	∅ 34.00 / 29.90 x 1.30

IMPORTANT!
Item No. 3000306312 = seal kit NBR (Nitril)
Item No. 3000307037 = seal kit FKM (Viton)
Item No. 3000306511 = seal kit MIL (low temp.)

7 Installation information

IMPORTANT!:
Designing load-control valves requires specialist technical knowledge and product knowledge. Safety applications must be verified by adequate tests to ensure safety in actual use.

IMPORTANT!:
The valve may only be used for its intended purpose within its nominal rating. If you plan to use it outside the nominal rating, you must contact the valve manufacturer.
The ultimate responsibility for safety in the installation and use rests with the end-machine manufacturer of the mobile application.

IMPORTANT!
When fitting the cartridges, use the specified tightening torque. No adjustments are necessary, since the cartridges are set in the factory.

ATTENTION!
Only qualified personnel with mechanical skills may carry out any maintenance work. Generally, the only work that should ever be undertaken is to check, and possibly replace, the seals. When changing seals, oil or grease the new seals thoroughly before fitting them.

ATTENTION!:
The valve may only be mounted or tightened using the SW 46 hexagon!

8 Application examples

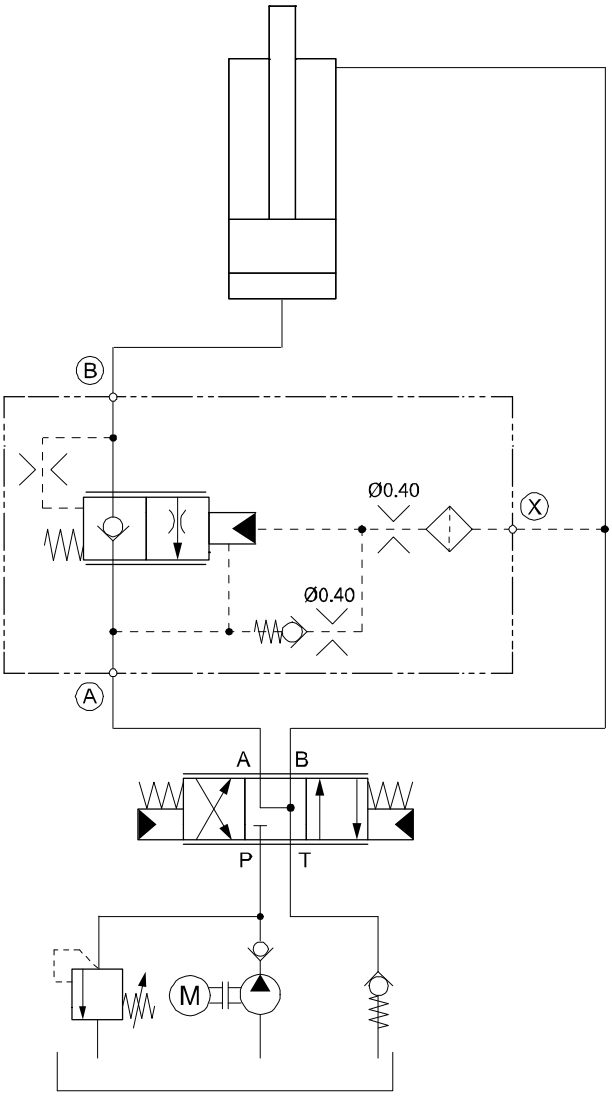

WWW.SUMY.IR

9 Ordering code

e.g. BBV 6 C - 2FL / 0.30 / BY - 0.00 / N

BBV	=	load control valve
6	=	size 6
C	=	cartridge design
2FL	=	piston type 2FL
4FL	=	piston type 4FL
4FS	=	piston type 4FS
4SL	=	piston type 4SL
8FS	=	piston type 8FS
0.25	=	damping orifice Ø 0.25
0.30	=	damping orifice Ø 0.30
0.35	=	damping orifice Ø 0.35
0.40	=	damping orifice Ø 0.40
BY	=	with bypass (**standard**)
0.00	=	bypass orifice Ø 0.00 (closed)
0.30	=	bypass orifice Ø 0.30
0.35	=	bypass orifice Ø 0.35
0.40	=	bypass orifice Ø 0.40
0.45	=	bypass orifice Ø 0.45
N	=	NBR (Nitrile) seals (**standard**)
V	=	FKM (Viton) seals
T	=	MIL (low temperature) seals (special seals - please contact BUCHER)

IMPORTANT!:
Further orifice combinations available in consultation with Bucher Hydraulics.

10 Cartridge cavity

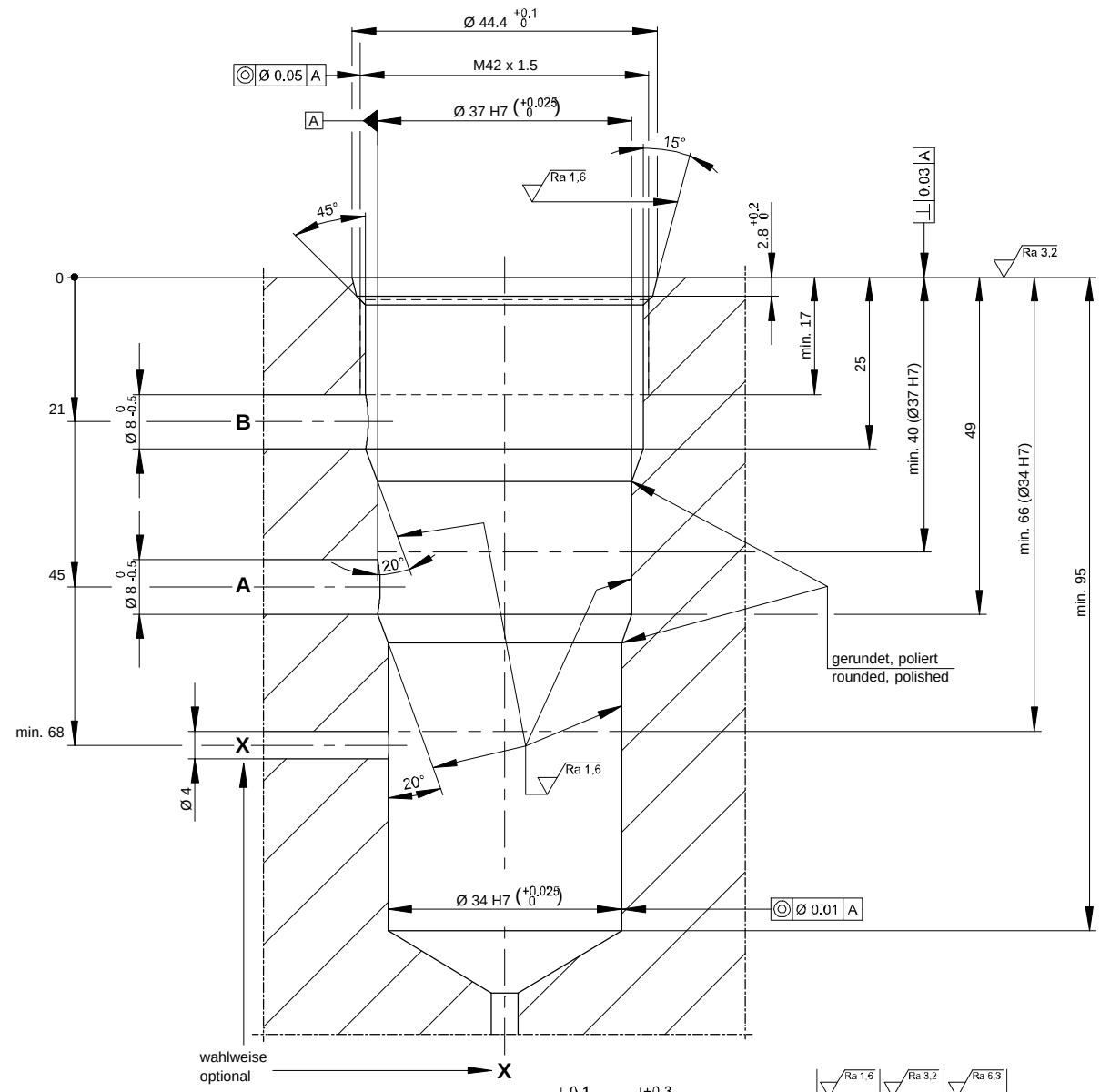

	Ra 1,6	Ra 3,2	Ra 6,3
Rauheitsklasse Roughness class	N7	N8	N9
Rz [µm]	10	20	40

ATTENTION!
You must maintain the specified positional and diametral tolerances. To ensure trouble-free operation of the screw-in cartridges, we strongly recommend that pilot drilling, boring, reaming and cavity thread-cutting are always performed in one setup.

© 2020 by Bucher Hydraulics AG, CH-6345 Neuheim
All rights reserved.
Data is provided for the purpose of product description only, and must not be construed as warranted characteristics in the legal sense. The information does not relieve users from the duty of conducting their own evaluations and tests. Because the products are subject to continual improvement, we reserve the right to amend the product specifications contained in this catalogue.

Classification: 430.325.360.305.315.325.305.310

Leak-Free Load-Control Valve, Size 20

Q_{max} = 350 l/min [92 gpm], p_{max} = 420 bar [6000 psi]
leak-proof, two-stage hydraulic, cartridge design
Series CINDY 20-B-C...

- Two-stage load-control valve and bypass check valve are functionally combined in one coaxial valve assembly
- Leak-free load holding
- Pilot ratio 113:1
- Guaranteed closing force for the load-control assembly → reliable shut-off even with a broken spring
- Various pilot-pressure ranges can be chosen
- Various types of pilot control are available
- Low-noise operation thanks to specially shaped control grooves

1 Description

Whenever large loads are to be precisely moved, placed and held, or work access platforms must maintain their position and withstand high forces, then leak-free load-control valves from the CINDY series are the right solution.
Load-control valves in this series prevent hydraulic actuators from running ahead of the available oil supply. In one valve, they combine the functions of load-holding, safety and pipe-rupture protection. Leak-free load-control valves in this series are ideally suited for use in high-pressure applications up to 420 bar (6000 psi). With a variety of optional components, the series can be extended and adapted to the requirements of the system.

2 Symbol

2.1 Cartridge design variants

Variant A

Influenced by return-line pressure
(pressure in A is additive to opening pilot pressure).

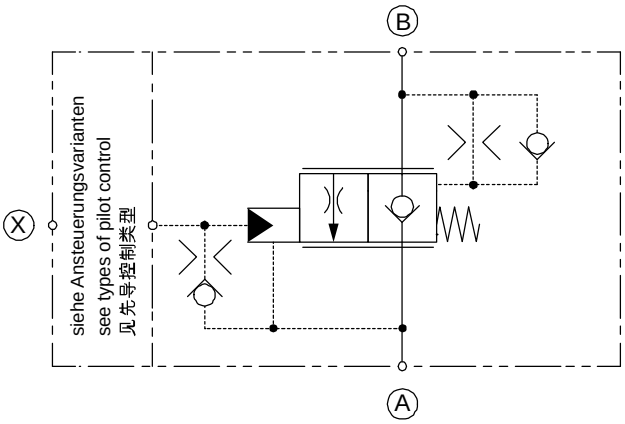

Variant L

Not influenced by return-line pressure
(drain line is required).

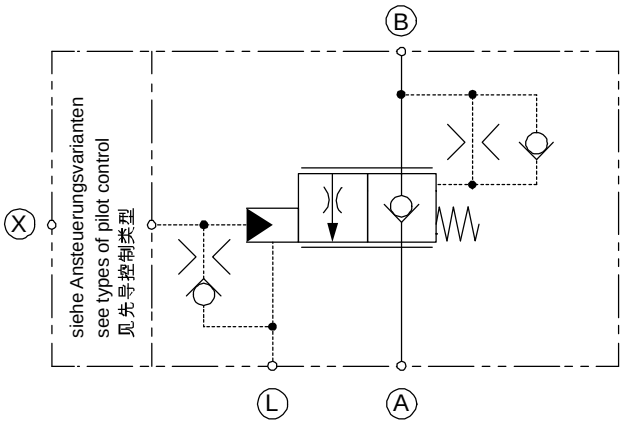

3 Technical data

General characteristics		Description, value, unit
Designation		leak-free load-control valve
Design		leak-proof, two-stage hydraulic, cartridge design
Size		Size 20
Mounting method		flange mounting 6x cylinder screw with internal hexagon M8x25 DIN EN ISO 4762, – grade 12.9
Main ports	A, B	Ø 20 mm [Ø .787 inch] (factory standards)
Control port	X	G ¼“ ISO 1179-1
Drain ports	L1	Ø 6 mm [Ø .236 inch] (factory standards)
Test ports	MB, MX	G ¼“ ISO 1179-1
Weight		2.7 … 3.7 kg [5.95…8.15 lbs]
Mounting attitude		unrestricted
Ambient temperature range		- 25 °C … +100 °C [-13 °F … +212 °F] (others on application)
Surface corrosion protection		Cover: zinc-nickel coating Mounting screws zinc-flake coated (e.g. with Geomet® finish) Flange and cartridge have no surface protection

Hydraulic characteristics		Description, value, unit
Maximum operating pressure		420 bar [6000 psi]
Maximum pressure at the flow- or return port A		420 bar [6000 psi]
Maximum pressure at the actuator- / load port B		420 bar [6000 psi]
Maximum pressure at the pilot port X		420 bar [6000 psi] (restrictions possible - see section types of pilot control ⇒ 4.4)
Maximum flow rate		350 l/min [92 gpm]
Flow direction		A → B, free flow through check valve B → A, controlled flow
Operator type		hydraulic proportional or electro proportional
Opening pilot ratio		113:1
Hydraulic fluid		HL and HLP mineral oil to DIN 51 524; for other fluids, please contact BUCHER
Hydraulic fluid temperature range		- 25 °C … + 80 °C [-13 °F … +176 °F]
Temperature rating of seals	NBR FKM MIL	- 25 °C … + 100 °C [-13 °F … +212 °F] - 20 °C … + 200 °C [-4 °F … +392 °F] - 55 °C … + 80 °C [-67 °F … +176 °F]

Hydraulic characteristics	Description, value, unit
Viscosity range	2.8…1500 mm^2/s (cSt), recommended 10…380 mm^2/s (cSt)
Minimum fluid cleanliness Cleanliness class to ISO 4406 : 1999	class 20/17/14

4 Construction and function

The functions of the control assembly are subdivided into the following positions:

4.1 Neutral position

The load pressure and the compression spring act on the control spool in the closing direction. The valve is closed with no leakage.

4.2 Lifting (flow direction from A → B)

The pump pressure at port A opens the valve against the “light” compression spring and the load. The pilot spool and control spool move together in the opening direction. Oil flows from A → B and the valve functions as a check valve.

4.3 Lowering (flow direction from B → A)

The pilot pressure at port X acts on the pilot piston and against the control springs. The pilot spool opens. As a result, the load pressure B is discharged to port A via the metering grooves in the pilot spool. The progressive characteristic of the pre-opening phase ensures that lowering begins smoothly and without jerks.
If the pilot pressure at port X is increased, the pilot spool opens further. The change in the pressure conditions at the control spool means that it follows the pilot spool in the opening direction. The oil flows from B → A.

Neutral position
(Symbol for 4.1)

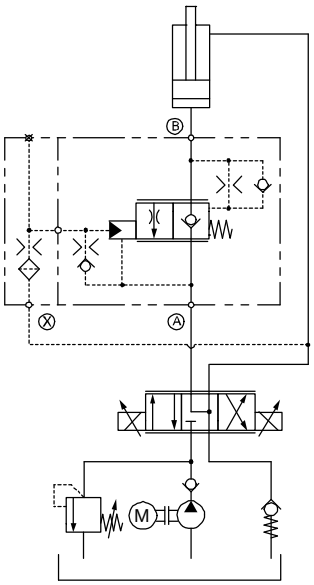

Lifting (A → B)
(Symbol for 4.2)

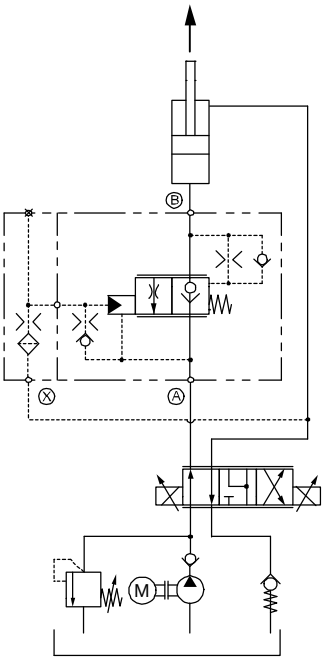

Lowering (B → A)
(Symbol for 4.3)

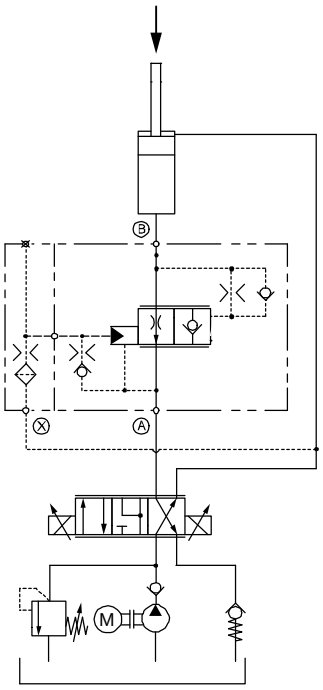

4.4 Types of pilot control

Cover types / applications	Type “G“	Type “D“	Type “K“	Type “H“	Type “R“	Type “E“
Cylinder application (external pilot signal)	✓✓	×	×	✓	✓	✓✓
Cylinder application (pilot signal from opposite line)		✓✓			×	×
Motors / Winches	×		✓✓	×	×	×
Motors for slewing drives	×	✓✓	×	×	×	×

Explanation of symbols: ✓✓ = normal ✓ = possible × = not possible

4.4.1 Standard damping cover, type “G“

Pilot control type “G“ is recommended for external control, or with low-oscillation applications. This control cover can only be damped with an inlet orifice. Stroke-dependent damping is not possible with this cover.

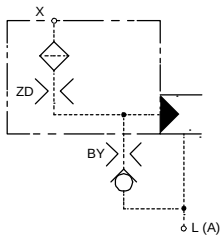

4.4.2 Stroke-dependent damping cover, type “D“

The type “D“ cover is recommended for handling pilot signals that come from the opposite actuator line and for applications that are susceptible to oscillations. Thanks to the pilot piston's stroke-dependent damping system, oscillation-prone applications can be started in a very stable manner. The starting pressure peak is reduced because in the starting zone the valve responds quickly to the pilot signal.

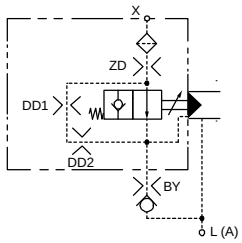

4.4.3 Stroke-dependent damping cover with metering grooves, type “K“

The stroke-dependent damping cover with metering grooves, type “K“, is recommended for applications that are susceptible to oscillations, such as hydraulic motors (e.g. winches).

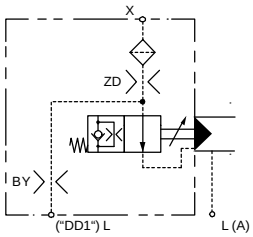

4.4.4 Hydromechanical stroke-limiting cover, type “H“

With the type “H“ pilot control, the stroke of the load-control spool can be limited from outside the valve to achieve a particular flow rate or speed. This reduces the valve resolution.

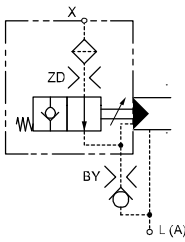

4.4.5 Hydraulic pressure-reducing valve cover type “R“

Pilot control type “R“ denotes the version in which the incoming pilot pressure is reduced to a preset level. This function is needed when working with compensated and over-compensated applications, and the actual pilot pressure in the pilot chamber must not exceed 19 bar. The small leakage flow from the pressure reducing valve is discharged through an internal drain connection. The maximum allowable inlet pressure at port X is 100 bar. Because compensated and over-compensated systems must always be externally controlled, an inlet orifice is not normally required.

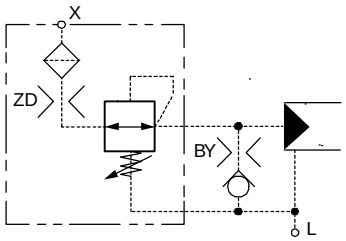

IMPORTANT!: Only available in return pressure independent version (L).

4.4.6 Electroproportional pressure-reducing valve cover type “E“

The type “E“ control can be used for electroproportional control. In this case, the inlet signal at port X is reduced to a level proportional to the applied control current. The small flow of pilot oil from the pressure reducing valve is led away through an internal drain connection or a separate drain port. This control type is only intended for external pilot oil supplies, and it is essential to use a back-pressure-independent body (L).

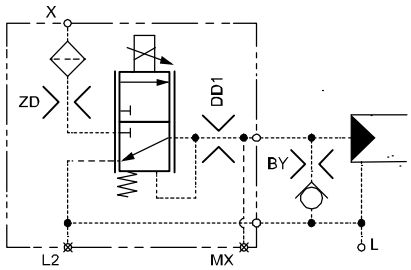

Hydraulic characteristics	Description, value, unit	
Pilot-oil supply at X	min. 30 bar max. 350 bar	[min. 435.11 psi] [max. 5076.32 psi] *
Permissible tank pressure at L (static)	max. 5 bar	[max. 72.51 psi]
Flow rate (pump) available at X	min. 2 l/min	[min. 0.528 gpm]
Pilot-oil consumption / Leakage flow rate	< 0.1 l/min (I = 0) < 0.5 l/min (I = max)	[< 0.026 gpm (I = 0)] [< 0.132 gpm (I = max)]
Hysteresis (with PWM control; pulse frequency 100 Hz)	0.5 bar	[7.25 psi]
Pilot-pressure control range	0…20 bar	[0…290.07 psi] *

* Other values on request

Electrical characteristics	Description, value, unit	
Nominal voltage	12 V DC	24 V DC
Resistance R 20	5.3 Ω ± 5 %	21.2 Ω ± 5 %
Maximum current at 100% duty cycle	1500 mA	750 mA
Power consumption at operating temperature (with increased resistance)	18 W	18 W
Control current at start of opening	~ 600 mA	~ 300 mA
Control current when fully open	~ 1400 mA	~ 700 mA
Relative duty cycle	100 %	
Insulation class	180 °C (VDE 0580:H)	[356 °F]
Protection class	IP 65 (DIN VDE 0470)	
Connector plug type	AMP Junior Timer Deutsch Plug DT04-2P	

IMPORTANT!: Only available in return pressure independent version (L).

General:

The series-connection of the orifices allows the opening time, the closing time, the start of opening, and the full extent of opening to be matched to the requirements of the application.

5 Performance graphs

measured with oil viscosity 33 mm²/s (cSt)

Δp = f (Q) Pressure drop - Flow rate characteristic

Lifting A → B

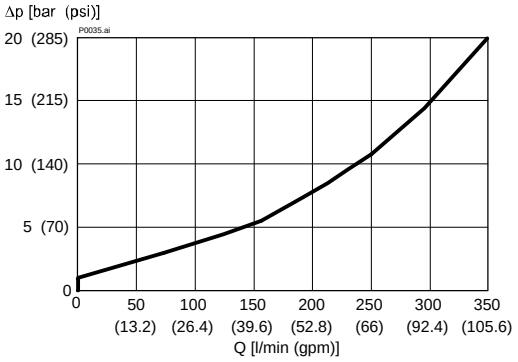

Δp = f (Q) Pressure drop - Flow rate characteristic

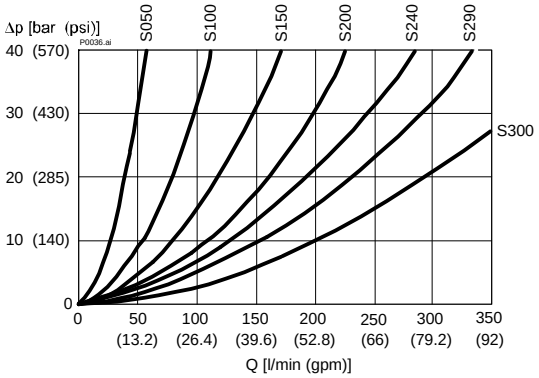

Lowering B → A

6 Available modules

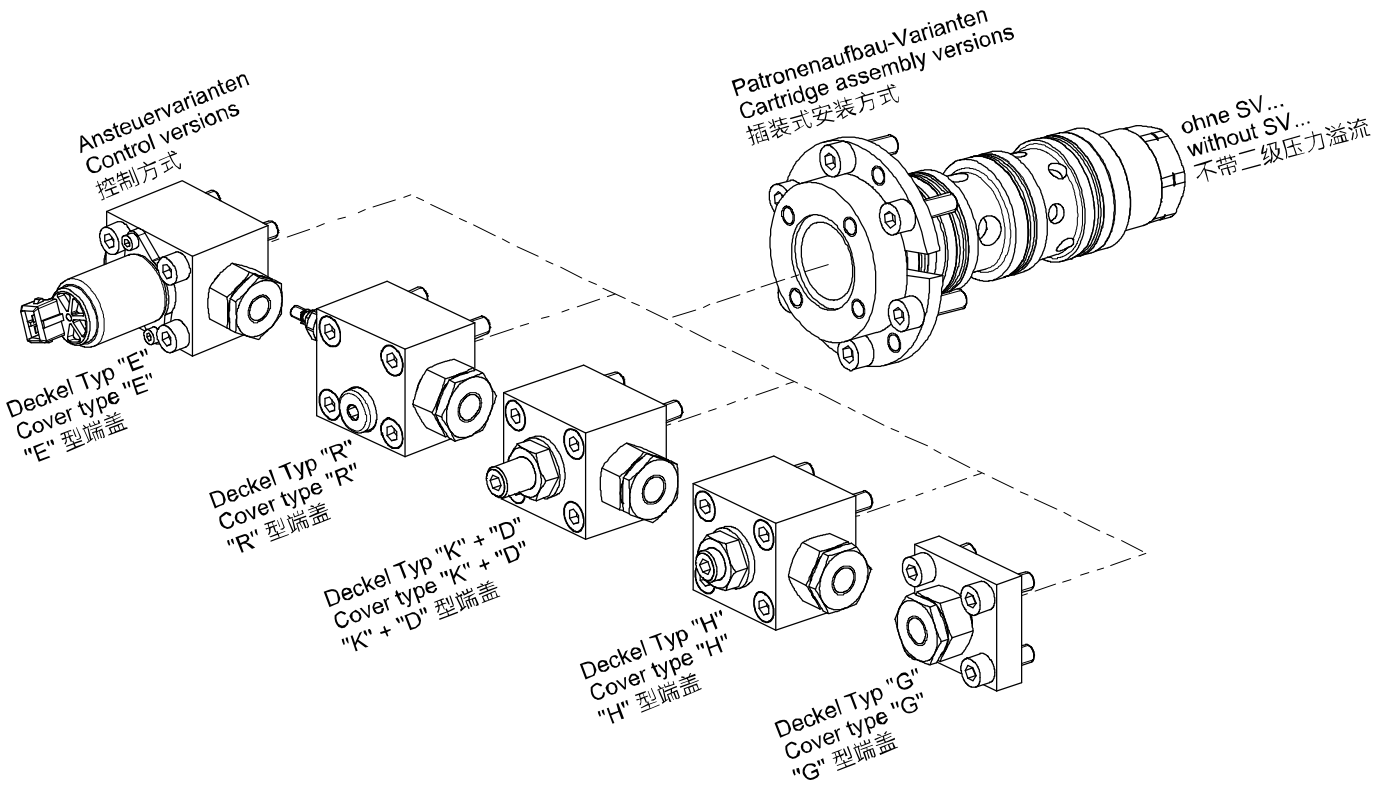

7 Dimensions & sectional view

Beispiel für die Masseinheit:
Example for the dimensional units:
尺寸单位举例:

0.79	=	0.79 mm	millimeter
[.031]	=	0.031 "	inch

Ohne Druckbegrenzungsventil
Without pressure relief valve
不带溢流阀

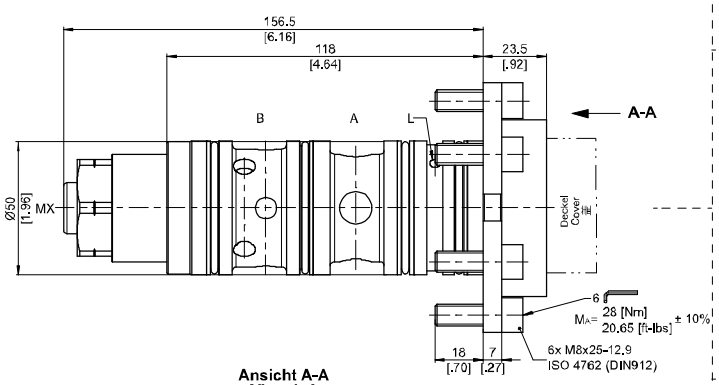

Ansicht A-A
View A-A
视图 A-A

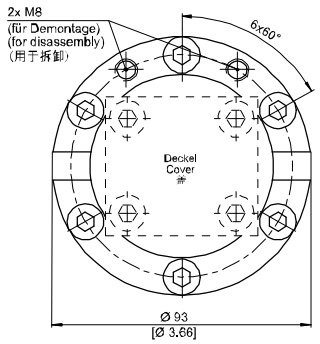

Standarddämpfungsdeckel Typ "G"
Standard damping cover type "G"
"G" 型标准阻尼功能端盖

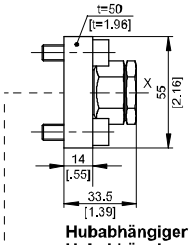

Hubabhängiger Dämpfungsdeckel Typ "D"
Hubabhängiger Kerbendämpfungsdeckel Typ "K"
Stroke-dependent damping cover type "D"
Stroke-dependent damping cover with metering grooves type "K"
"D" 型行程相关阻尼功能端盖
"K" 型行程相关阻尼功能端盖，带沟槽

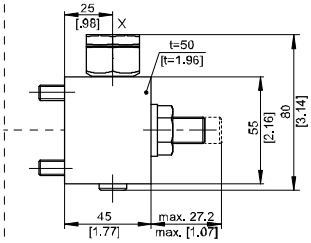

* = werkseitige Einstellung
* = factory setting
* = 工厂设定

Hydromechanischer Hubbegrenzungsdeckel Typ "H"
Hydromechanical stroke-limiting cover type "H"
"H" 型机-液行程限制功能端盖

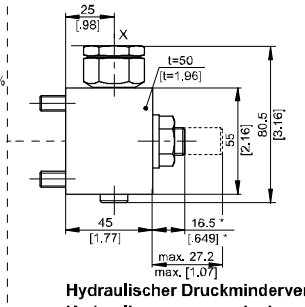

* = werkseitige Einstellung
* = factory setting
* = 工厂设定

Hydraulischer Druckminderventildeckel Typ "R"
Hydraulic pressure-reducing valve cover type "R"
"R" 型减压阀功能端盖

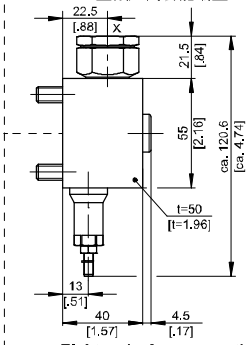

Elektronischer proportional Druckminderventilteckel Typ "E"
Electronic proportional pressure reducing valve cover type "E"
"E" 型电比例减压阀功能端盖

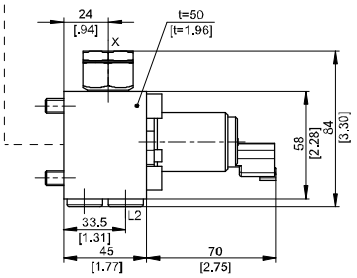

7.1 Cavity type

Variante 1
Variant no. 1
类型 1

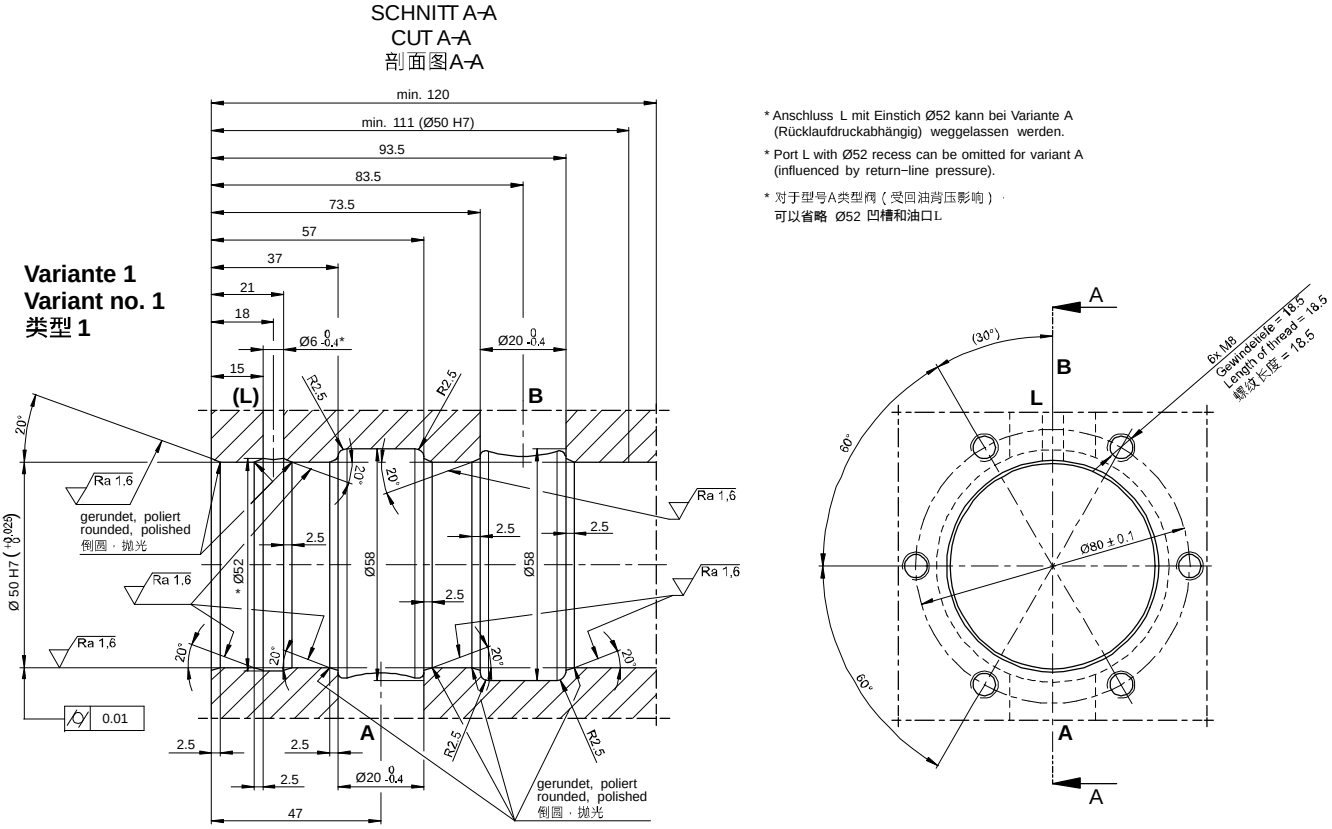

Variante 2
(übrige Masse – siehe Variante 1)
Variant no. 2
(all other dimensions – see variant no. 1)
类型 2
(其它所有尺寸 – 参见变量 1)

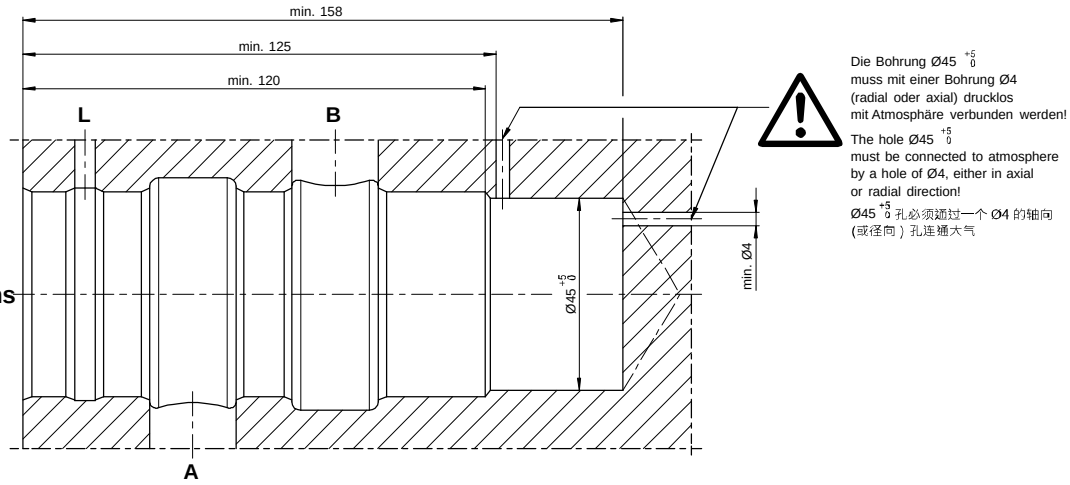

Toleranzen nach:
Tolerances according to:
公差基于:
DIN ISO 2768-mK

Ra 6,3

-0.1 -0.2

+0.2 +0.1

	Ra 1,6	Ra 6,3
Rauheitsklasse Roughness class 粗糙度等级	N7	N9
Rz [µm]	10	40

8 Options

8.1 Load-pressure-overcompensated model

This version with compensation orifice (KD) is recommended for long boom systems, e.g. the telescopic booms of mobile cranes. The compensation, alternatively the overcompensation, has the effect of limiting the speed as the load pressure increases, and this in turn raises machine safety levels.
During the lowering function B → A (with a maximum pilot pressure of 19.8 bar), the cylinder's retraction speed is influenced by the compensation orifice KD. In spite of the constantly changing kinematics and the resulting increase in the load pressure, the lowering speed:

- is held almost constant even without a compensation orifice (standard model)
- is reduced with a compensation orifice (overcompensated model)

The compensation orifice in the pilot spool has the effect that, as the load pressure increases, the pressure acting on the control spool in the closing direction also rises. As a result, the control spool throttles the B → A flow area. To ensure that this function operates properly, these valve types must always be externally piloted.

ATTENTION!:
A prerequisite is that the pilot pressure acting on the pilot piston is limited to max 19.8 bar. A higher pressure will prevent the speed-limiting function from working.

IMPORTANT!:
To ensure that this function operates properly, the back-pressure-independent variant L should be used.

Characteristic curves (examples)

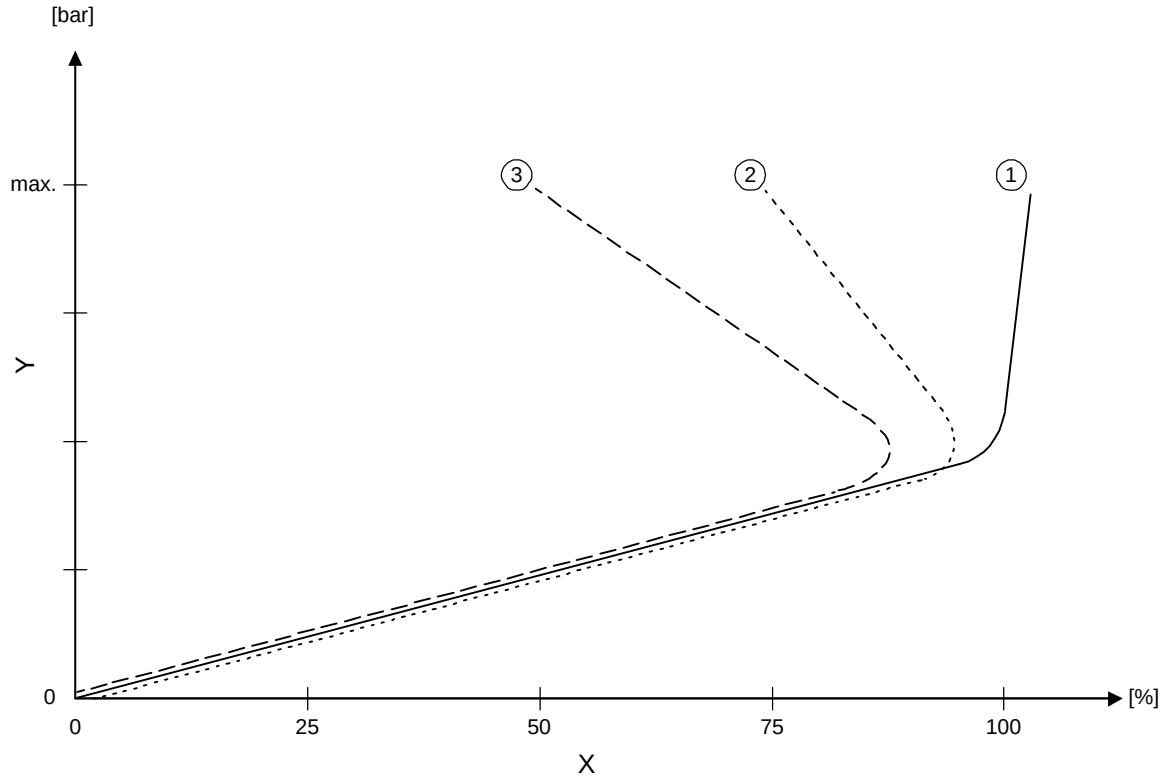

X	Flow B → A
Y	Load pressure

1	Load-pressure-compensated model (without compensation orifice, KD)
2	Approx. 25 % overcompensated (KD Ø 1.8)
3	Approx. 50 % overcompensated (KD Ø 1.5)

9 Safety instructions

IMPORTANT!:
Designing load-control valves requires specialist technical knowledge and product knowledge.
Safety applications must be verified by adequate tests to ensure safety in actual use.

9.1 Assembly / disassembly

IMPORTANT!:
The valve may only be used for its intended purpose within its nominal rating. If you plan to use it outside the nominal rating, you must contact the valve manufacturer. The ultimate responsibility for safety in the installation and use rests with the end-machine manufacturer of the mobile application.

IMPORTANT!:
Seal kit with the external seals is available on application.

IMPORTANT!:
The port threads conform to DIN 3852-2.
Use screws to DIN EN ISO 4762, grade 12.9, to mount the valve.
Tightening torques as per the manufacturer's instructions. These can be found on our website:
www.bucherhydraulics.com
(LOGIntern area; registration required)

IMPORTANT!:
Protect seals and flange faces from damage.
The mating flange face must be of the quality specified in the data sheet!
Pay attention to the port designations.

10 Application examples

10.1 Cylinder application

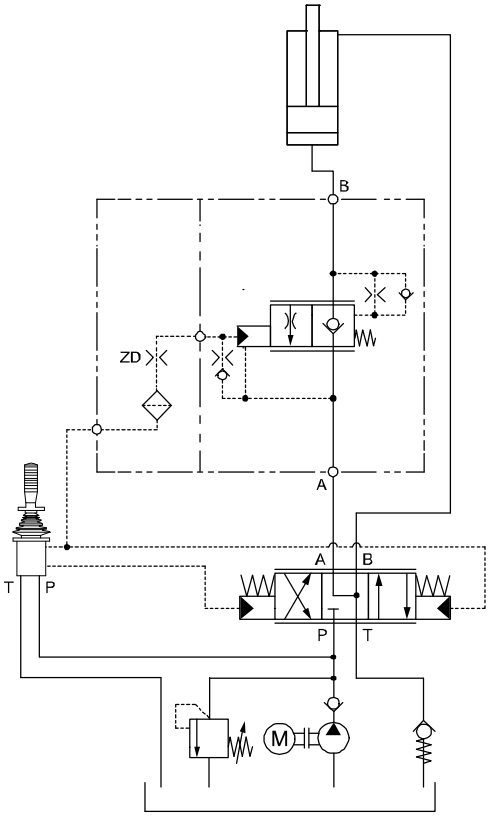

10.2 Motor application

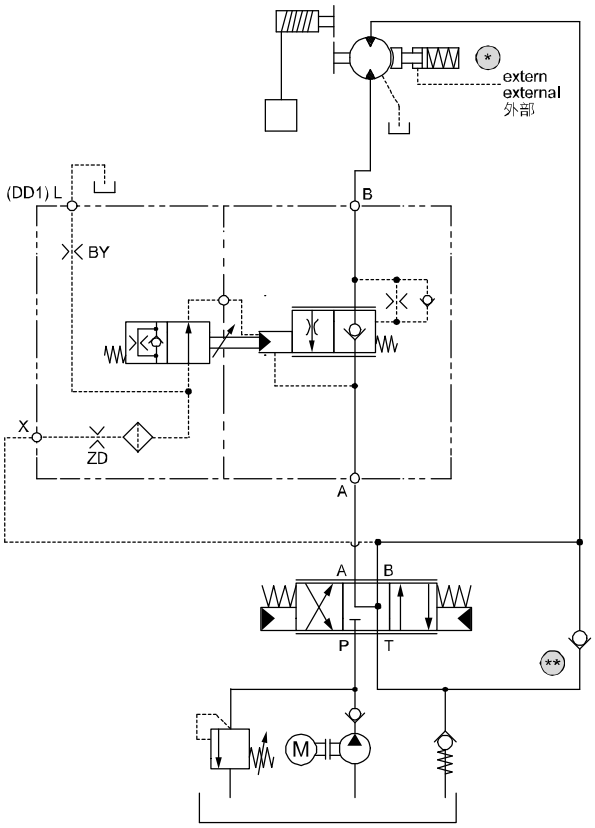

RECOMMENDATION

* Mechanical brake, externally controlled for reduced lowering pressures in the supply line of the motor.

** Anti-cavitation check valve for additional safety.

ATTENTION!:
Cavitation danger!

Control from the opposite line:
To open the valve, we recommend control from the opposite line. This method ensures that the actuator cannot run ahead of the incoming flow.

Brake release
(unlocking the mechanical brake):
The mechanical brake must be released before the load-control valve for winches is opened. This prevents draining of the return line to the main spool before the valve opens, thus preventing load fall.

11 Ordering code

e.g. CINDY 20 – B – C N D – S100 – A – G… – __ – … – ___

CINDY	=	series
20	=	size 20
B	=	model / version
C	=	cartridge design
N	=	NBR (Nitrile) seals **(standard)**
V	=	FKM (Viton) seals
T	=	MIL (low temperature) seals
D	=	incl. screws Geomet (ZL) 12.9 DIN 912
S050	=	standard spool, B → A 50 l/min [13.20 gpm] *
S100	=	standard spool, B → A 100 l/min [26.41 gpm] *
S150	=	standard spool, B → A 150 l/min [39.61 gpm] *
S200	=	standard spool, B → A 200 l/min [52.82 gpm] *
S240	=	standard spool, B → A 240 l/min [63.40 gpm] *
S290	=	standard spool, B → A 290 l/min [76.61 gpm] *
S300	=	standard spool, B → A 300 l/min [79.25 gpm] *
A	=	influenced by return-line pressure in A
L	=	not influenced by return-line pressure
G…	=	standard damping cover
D…	=	stroke-dependent damping cover
K…	=	stroke-dependent damping cover with metering grooves
H…	=	hydromechanical stroke-limiting cover
R…	=	hydraulic pressure-reducing valve cover [1)]
E…	=	electroproportional pressure-reducing valve cover [1)]
...	=	orifice combination (is factory-defined)
(blank)	=	without load pressure overcompensation
25	=	with load pressure overcompensation 25% / compensation orifice KD Ø 1.8
50	=	with load pressure overcompensation 50% / compensation orifice KD Ø 1.5
52	=	with load pressure overcompensation 52% / compensation orifice KD Ø 1.4
54	=	with load pressure overcompensation 54% / compensation orifice KD Ø 1.3
24DI	=	data for “E” cover only: AMP Junior Timer, 24 VDC **(standard)**
12DI	=	data for “E” cover only: AMP Junior Timer, 12 VDC
24DT	=	data for “E” cover only: Deutsch plug DT04-2P, 24 VDC
12DT	=	data for “E” cover only: Deutsch plug DT04-2P, 12 VDC

*) measured at 33 bar [478 psi] Δp from B → A.

[1)] Only available in return pressure independent version (L).

12 Related data sheets

Reference	Description
300-D-9050098	Project Engineering & User Information, Series CINDY, SAE-flange, manifold and cartridge design
300-D-9050102	Technical design sheet for CINDY load-control valves in cylinder applications
300-S-9050030	Spare Parts Information, Series CINDY as cartridge design

IMPORTANT!:
Additional documentation and 3D models (.stp or .igs format) can be downloaded from *www.bucherhydraulics.com*
(LOGintern area; registration is necessary)

We also offer customised solutions.
Please talk to our sales team.

info.ch@bucherhydraulics.com www.bucherhydraulics.com

© 2023 by Bucher Hydraulics AG, CH-6345 Neuheim
All rights reserved.
Data is provided for the purpose of product description only, and must not be construed as warranted characteristics in the legal sense. The information does not relieve users from the duty of conducting their own evaluations and tests. Because the products are subject to continual improvement, we reserve the right to amend the product specifications contained in this catalogue.

Classification: 430.325.360.305.340.325.305.310

Leak-Free Load-Control Valve, Size 25

Q_{max} = 500 l/min [132 gpm], p_{max} = 420 bar [6000 psi]
leak-proof, two-stage hydraulic, cartridge design
Series CINDY 25-B-C...

- Two-stage load-control valve and bypass check valve are functionally combined in one coaxial valve assembly
- Leak-free load holding
- Pilot ratio 113:1
- Guaranteed closing force for the load-control assembly → reliable shut-off even with a broken spring
- Various pilot-pressure ranges can be chosen
- Various types of pilot control are available
- Low-noise operation thanks to specially shaped control grooves

1 Description

Whenever large loads are to be precisely moved, placed and held, or work access platforms must maintain their position and withstand high forces, then leak-free load-control valves from the CINDY series are the right solution.
Load-control valves in this series prevent hydraulic actuators from running ahead of the available oil supply. In one valve, they combine the functions of load-holding, safety and pipe-rupture protection. Leak-free load-control valves in this series are ideally suited for use in high-pressure applications up to 420 bar (6000 psi). With a variety of optional components, the series can be extended and adapted to the requirements of the system.

2 Symbol

2.1 Cartridge design variants

Variant A

Influenced by return-line pressure
(pressure in A is additive to opening pilot pressure).

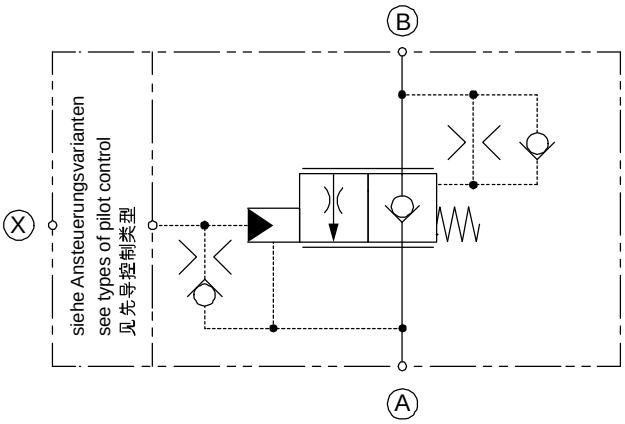

Variant L

Not influenced by return-line pressure
(drain line is required).

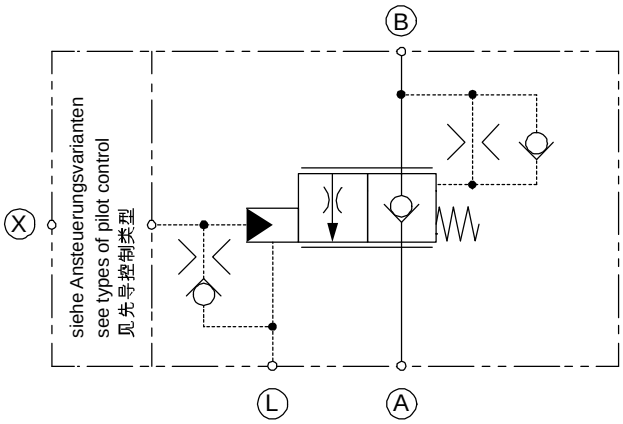

3 Technical data

General characteristics		Description, value, unit
Designation		leak-free load-control valve
Design		leak-proof, two-stage hydraulic, cartridge design
Size		Size 25
Mounting method		flange mounting 6x cylinder screw with internal hexagon M8x25 DIN EN ISO 4762, – grade 12.9
Main ports Control port Drain ports Test ports	A, B X L1 MB, MX	Ø 25 mm [Ø .984 inch] (factory standards) G ¼“ ISO 1179-1 Ø 6 mm [Ø .236 inch] (factory standards) G ¼“ ISO 1179-1
Weight		3.4 … 4.3 kg [7.49…9.47 lbs]
Mounting attitude		unrestricted
Ambient temperature range		- 25 °C … +100 °C [-13 °F … +212 °F] (others on application)
Surface corrosion protection		Cover: zinc-nickel coating Mounting screws zinc-flake coated (e.g. with Geomet® finish) Flange and cartridge have no surface protection

Hydraulic characteristics		Description, value, unit
Maximum operating pressure		420 bar [6000 psi]
Maximum pressure at the flow- or return port A		420 bar [6000 psi]
Maximum pressure at the actuator- / load port B		420 bar [6000 psi]
Maximum pressure at the pilot port X		420 bar [6000 psi] (restrictions possible - see section types of pilot control ⇒ 4.4)
Maximum flow rate		500 l/min [132 gpm]
Flow direction		A → B, free flow through check valve B → A, controlled flow
Operator type		hydraulic proportional or electro proportional
Opening pilot ratio		113:1
Hydraulic fluid		HL and HLP mineral oil to DIN 51 524; for other fluids, please contact BUCHER
Hydraulic fluid temperature range		- 25 °C … + 80 °C [-13 °F … +176 °F]
Temperature rating of seals	NBR FKM MIL	- 25 °C … + 100 °C [-13 °F … +212 °F] - 20 °C … + 200 °C [-4 °F … +392 °F] - 55 °C … + 80 °C [-67 °F … +176 °F]

Hydraulic characteristics	Description, value, unit
Viscosity range	2.8…1500 mm^2/s (cSt), recommended 10…380 mm^2/s (cSt)
Minimum fluid cleanliness Cleanliness class to ISO 4406 : 1999	class 20/17/14

4 Construction and function

The functions of the control assembly are subdivided into the following positions:

4.1 Neutral position

The load pressure and the compression spring act on the control spool in the closing direction. The valve is closed with no leakage.

4.2 Lifting (flow direction from A → B)

The pump pressure at port A opens the valve against the “light” compression spring and the load. The pilot spool and control spool move together in the opening direction. Oil flows from A → B and the valve functions as a check valve.

4.3 Lowering (flow direction from B → A)

The pilot pressure at port X acts on the pilot piston and against the control springs. The pilot spool opens. As a result, the load pressure B is discharged to port A via the metering grooves in the pilot spool. The progressive characteristic of the pre-opening phase ensures that lowering begins smoothly and without jerks.
If the pilot pressure at port X is increased, the pilot spool opens further. The change in the pressure conditions at the control spool means that it follows the pilot spool in the opening direction. The oil flows from B → A.

Neutral position
(Symbol for 4.1)

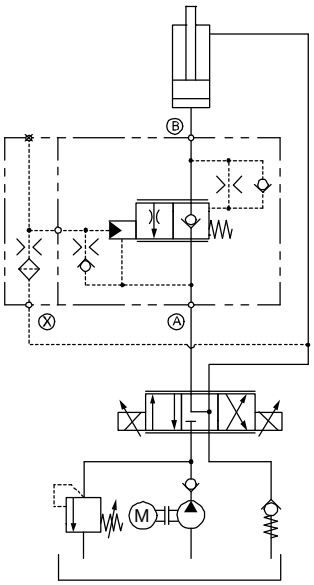

Lifting (A → B)
(Symbol for 4.2)

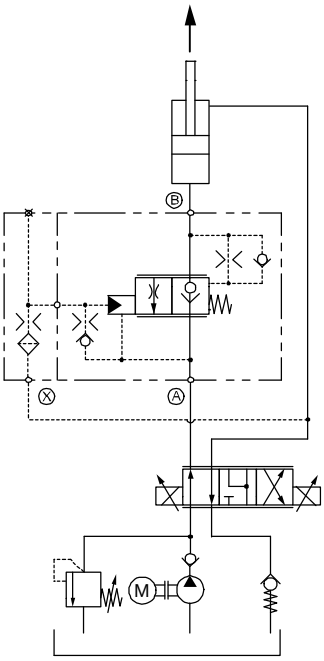

Lowering (B → A)
(Symbol for 4.3)

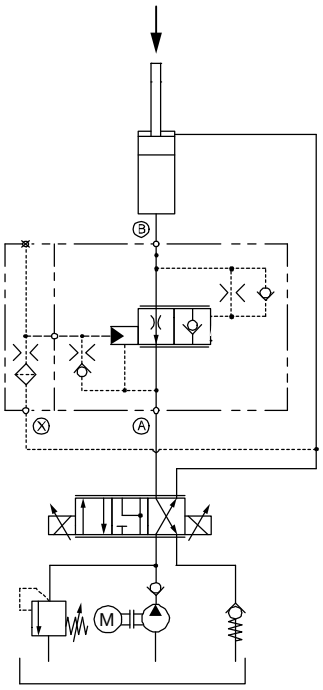

4.4 Types of pilot control

Cover types / applications	Type “G“	Type “D“	Type “K“	Type “H“	Type “R“	Type “E“
Cylinder application (external pilot signal)	✓✓	×	×	✓	✓	✓✓
Cylinder application (pilot signal from opposite line)		✓✓			×	×
Motors / Winches	×		✓✓	×	×	×
Motors for slewing drives	×	✓✓	×	×	×	×

Explanation of symbols: ✓✓ = normal ✓ = possible × = not possible

4.4.1 Standard damping cover, type “G“

Pilot control type “G“ is recommended for external control, or with low-oscillation applications. This control cover can only be damped with an inlet orifice. Stroke-dependent damping is not possible with this cover.

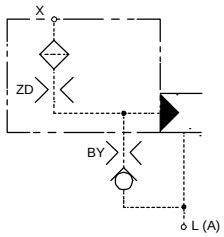

4.4.2 Stroke-dependent damping cover, type “D“

The type “D“ cover is recommended for handling pilot signals that come from the opposite actuator line and for applications that are susceptible to oscillations. Thanks to the pilot piston's stroke-dependent damping system, oscillation-prone applications can be started in a very stable manner. The starting pressure peak is reduced because in the starting zone the valve responds quickly to the pilot signal.

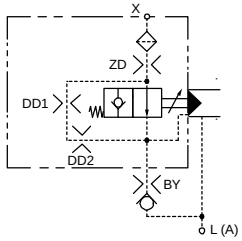

4.4.3 Stroke-dependent damping cover with metering grooves, type “K“

The stroke-dependent damping cover with metering grooves, type “K“, is recommended for applications that are susceptible to oscillations, such as hydraulic motors (e.g. winches).

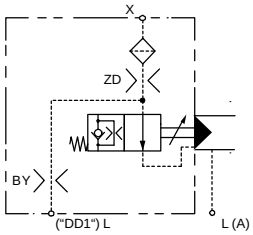

4.4.4 Hydromechanical stroke-limiting cover, type “H“

With the type “H“ pilot control, the stroke of the load-control spool can be limited from outside the valve to achieve a particular flow rate or speed. This reduces the valve resolution.

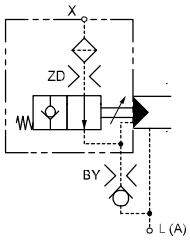

4.4.5 Hydraulic pressure-reducing valve cover type “R“

Pilot control type “R“ denotes the version in which the incoming pilot pressure is reduced to a preset level. This function is needed when working with compensated and over-compensated applications, and the actual pilot pressure in the pilot chamber must not exceed 19 bar. The small leakage flow from the pressure reducing valve is discharged through an internal drain connection. The maximum allowable inlet pressure at port X is 100 bar. Because compensated and over-compensated systems must always be externally controlled, an inlet orifice is not normally required.

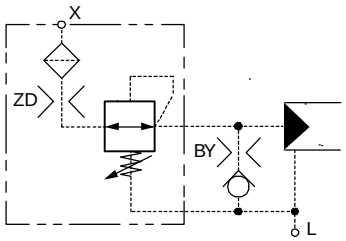

IMPORTANT!: Only available in return pressure independent version (L).

4.4.6 Electroproportional pressure-reducing valve cover type “E“

The type “E“ control can be used for electroproportional control. In this case, the inlet signal at port X is reduced to a level proportional to the applied control current. The small flow of pilot oil from the pressure reducing valve is led away through an internal drain connection or a separate drain port. This control type is only intended for external pilot oil supplies, and it is essential to use a back-pressure-independent body (L).

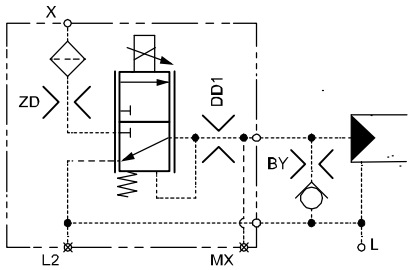

Hydraulic characteristics	Description, value, unit	
Pilot-oil supply at X	min. 30 bar max. 350 bar	[min. 435.11 psi] [max. 5076.32 psi] *
Permissible tank pressure at L (static)	max. 5 bar	[max. 72.51 psi]
Flow rate (pump) available at X	min. 2 l/min	[min. 0.528 gpm]
Pilot-oil consumption / Leakage flow rate	< 0.1 l/min (I = 0) < 0.5 l/min (I = max)	[< 0.026 gpm (I = 0)] [< 0.132 gpm (I = max)]
Hysteresis (with PWM control; pulse frequency 100 Hz)	0.5 bar	[7.25 psi]
Pilot-pressure control range	0…20 bar	[0…290.07 psi] *

* Other values on request

Electrical characteristics	Description, value, unit	
Nominal voltage	12 V DC	24 V DC
Resistance R 20	5.3 Ω ± 5 %	21.2 Ω ± 5 %
Maximum current at 100% duty cycle	1500 mA	750 mA
Power consumption at operating temperature (with increased resistance)	18 W	18 W
Control current at start of opening	~ 600 mA	~ 300 mA
Control current when fully open	~ 1400 mA	~ 700 mA
Relative duty cycle	100 %	
Insulation class	180 °C (VDE 0580:H)	[356 °F]
Protection class	IP 65 (DIN VDE 0470)	
Connector plug type	AMP Junior Timer Deutsch Plug DT04-2P	

IMPORTANT!: Only available in return pressure independent version (L).

General:

The series-connection of the orifices allows the opening time, the closing time, the start of opening, and the full extent of opening to be matched to the requirements of the application.

5 Performance graphs

measured with oil viscosity 33 mm²/s (cSt)

Δp = f (Q) Pressure drop - Flow rate characteristic
Lifting A → B

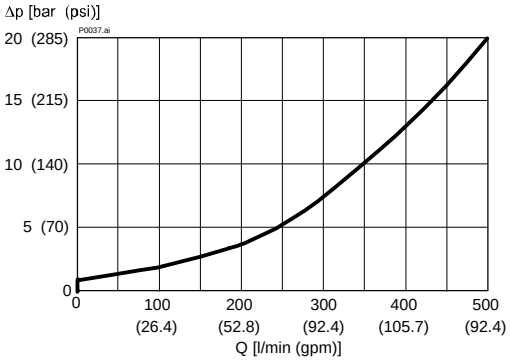

Δp = f (Q) Pressure drop - Flow rate characteristic
Lowering B → A

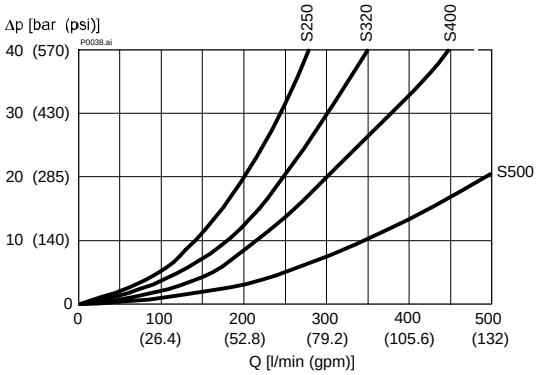

6 Available modules

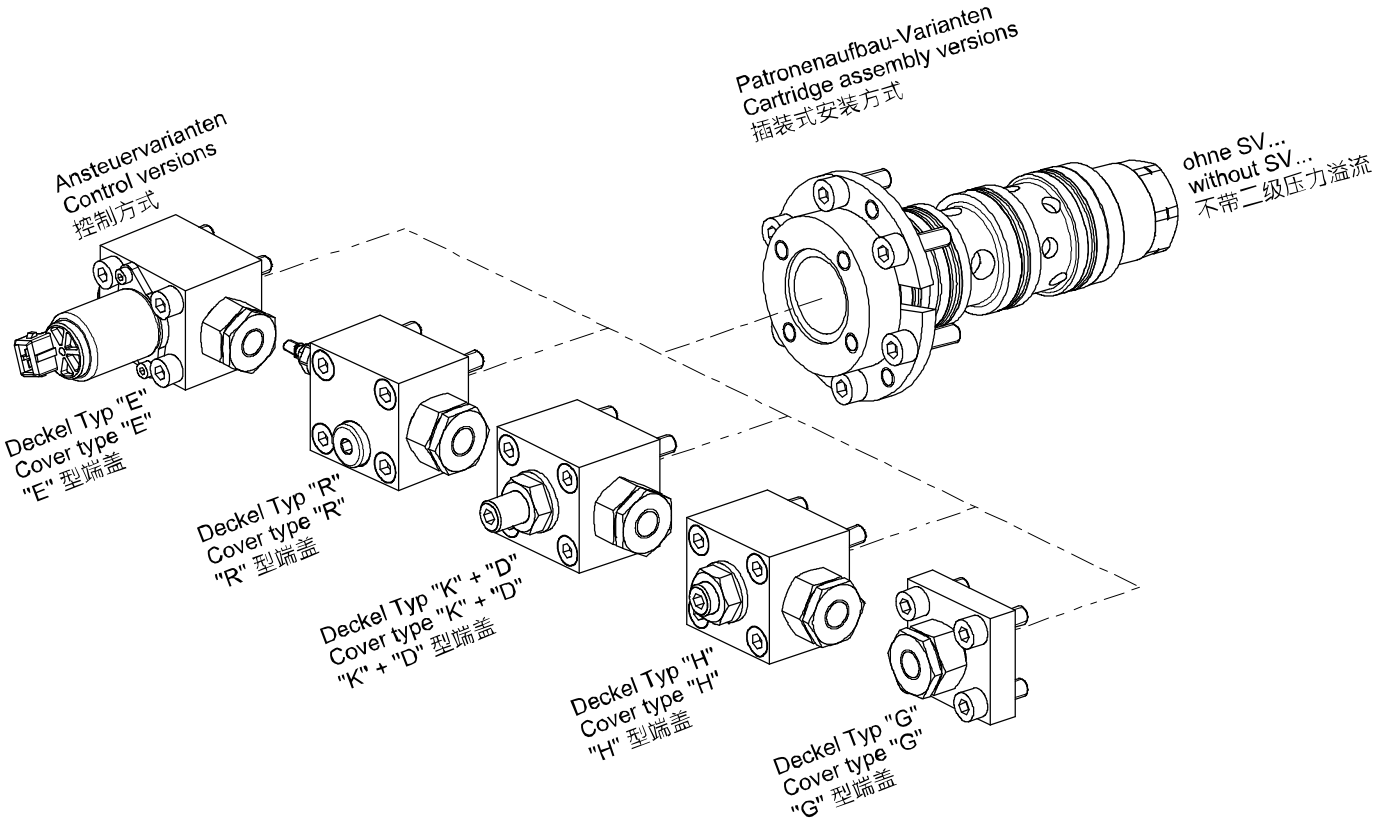

7 Dimensions & sectional view

Ohne Druckbegrenzungsventil
Without pressure relief valve
不带溢流阀

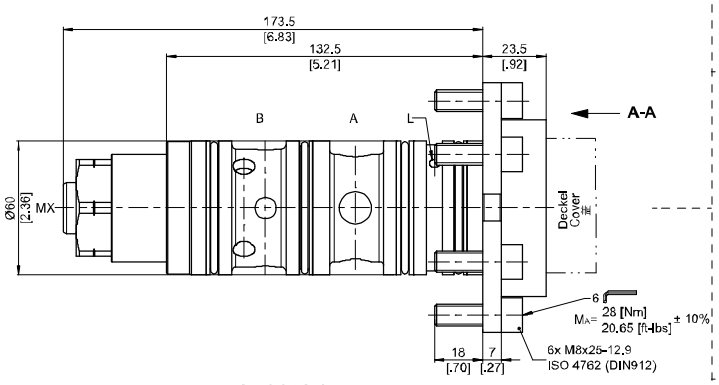

Ansicht A-A
View A-A
视图 **A-A**

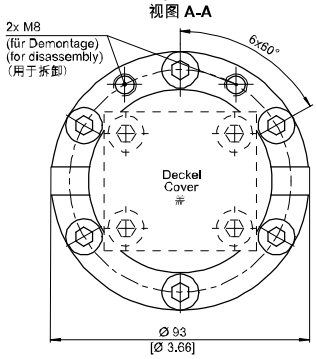

Standarddämpfungsdeckel Typ "G"
Standard damping cover type "G"
"G" 型标准阻尼功能端盖

Beispiel für die Masseinheit:
Example for the dimensional units:
尺寸单位举例:
0,79 = 0,79 mm millimeter
[.031] = 0.031 " inch

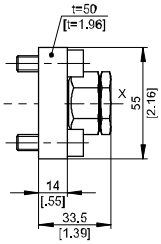

Hubabhängiger Dämpfungsdeckel Typ "D"
Hubabhängiger Kerbendämpfungsdeckel Typ "K"
Stroke-dependent damping cover type "D"
Stroke-dependent damping cover with metering grooves type "K"
"D" 型行程相关阻尼功能端盖
"K" 型行程相关阻尼功能端盖，带沟槽

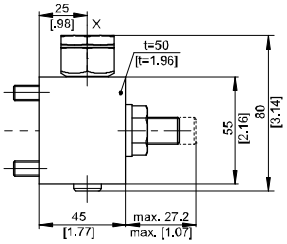

* = werkseitige Einstellung
* = factory setting
* = 工厂设定

Hydromechanischer Hubbegrenzungsdeckel Typ "H"
Hydromechanical stroke-limiting cover type "H"
"H" 型机-液行程限制功能端盖

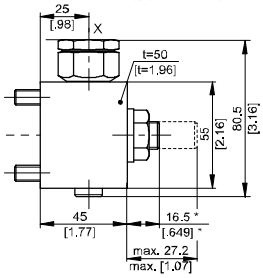

* = werkseitige Einstellung
* = factory setting
* = 工厂设定

Hydraulischer Druckminderventildeckel Typ "R"
Hydraulic pressure-reducing valve cover type "R"
"R" 型减压阀功能端盖

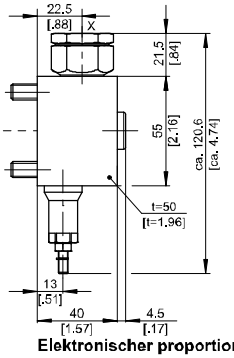

Elektronischer proportional Druckminderventilteckel Typ "E"
Electronic proportional pressure reducing valve cover type "E"
"E" 型电比例减压阀功能端盖

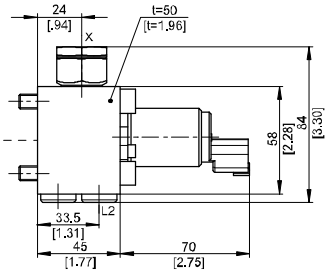

7.1 Cavity type

SCHNITT A-A
CUT A-A
剖面图A-A

Variante 1
Variant no. 1
类型 1

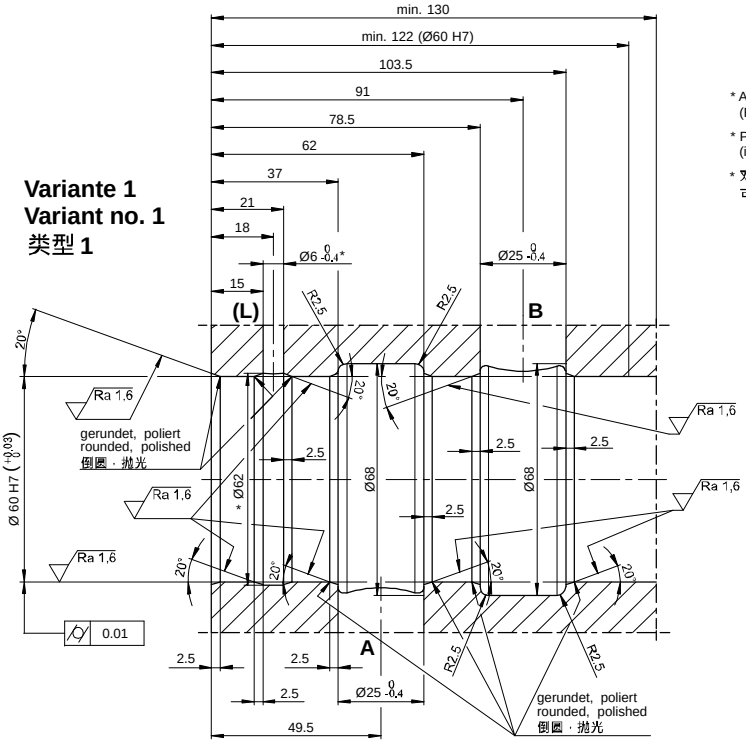

* Anschluss L mit Einstich Ø62 kann bei Variante A (Rücklaufdruckabhängig) weggelassen werden.

* Port L with Ø62 recess can be omitted for variant A (influenced by return-line pressure).

* 对于型号A类型阀（受回油背压影响）· 可以省略 Ø62 凹槽和油口L

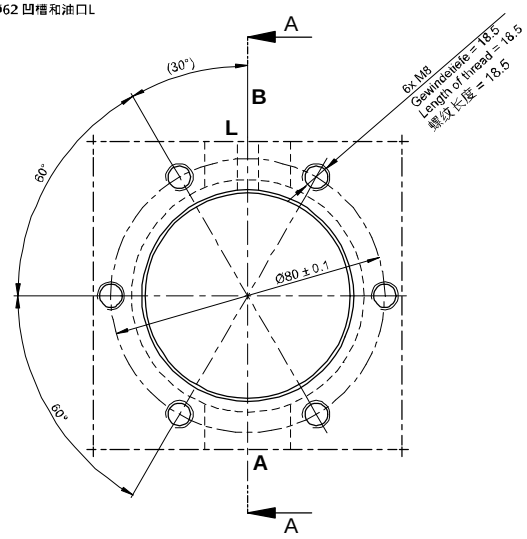

Variante 2
(übrige Masse – siehe Variante 1)
Variant no. 2
(all other dimensions – see variant no. 1)
类型 2
(其它所有尺寸 – 参见变量1)

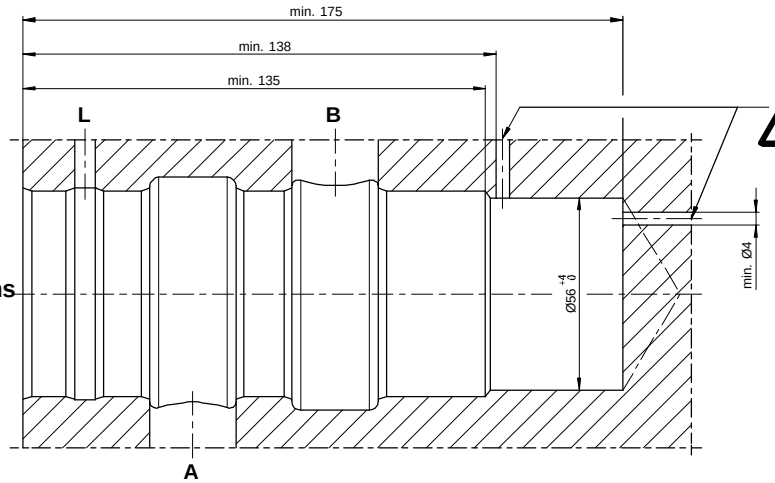

Die Bohrung Ø56 +4 0 muss mit einer Bohrung Ø4 (radial oder axial) drucklos mit Atmosphäre verbunden werden!

The hole Ø56 +4 0 must be connected to atmosphere by a hole of Ø4, either in axial or radial direction!

Ø56 +4 0 孔必须通过一个 Ø4 的轴向（或径向）孔连通大气

Toleranzen nach:
Tolerances according to:DIN ISO 2768-mK
公差基于:

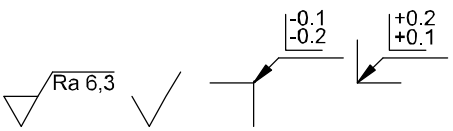

	Ra 1,6	Ra 6,3
Rauheitsklasse Roughness class 粗糙度等级	N7	N9
Rz [µm]	10	40

8 Options

8.1 Load-pressure-overcompensated model

This version with compensation orifice (KD) is recommended for long boom systems, e.g. the telescopic booms of mobile cranes. The compensation, alternatively the overcompensation, has the effect of limiting the speed as the load pressure increases, and this in turn raises machine safety levels.
During the lowering function B → A (with a maximum pilot pressure of 19.8 bar), the cylinder's retraction speed is influenced by the compensation orifice KD. In spite of the constantly changing kinematics and the resulting increase in the load pressure, the lowering speed:

- is held almost constant even without a compensation orifice (standard model)
- is reduced with a compensation orifice (overcompensated model)

The compensation orifice in the pilot spool has the effect that, as the load pressure increases, the pressure acting on the control spool in the closing direction also rises. As a result, the control spool throttles the B → A flow area. To ensure that this function operates properly, these valve types must always be externally piloted.

ATTENTION!:
A prerequisite is that the pilot pressure acting on the pilot piston is limited to max 19.8 bar. A higher pressure will prevent the speed-limiting function from working.

IMPORTANT!:
To ensure that this function operates properly, the back-pressure-independent variant L should be used.

Characteristic curves (examples)

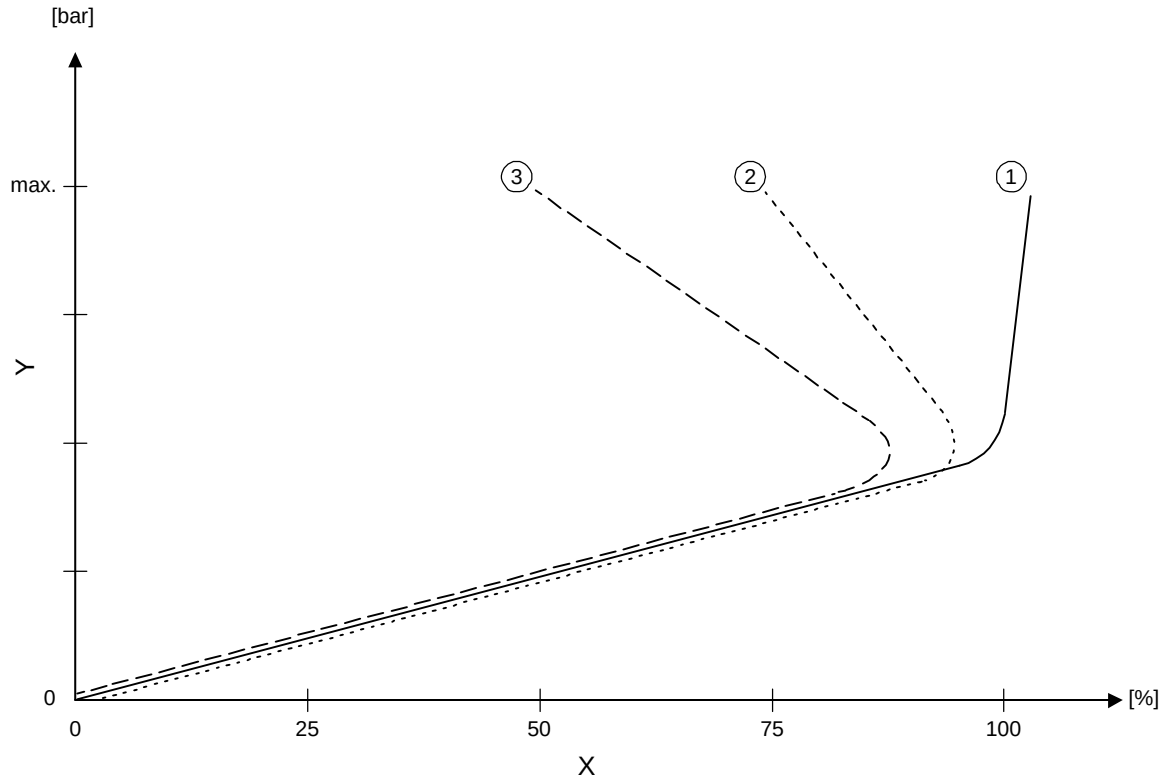

X	Flow B → A
Y	Load pressure

1	Load-pressure-compensated model (without compensation orifice, KD)
2	Approx. 25 % overcompensated (KD Ø 1.8)
3	Approx. 50 % overcompensated (KD Ø 1.5)

9 Safety instructions

IMPORTANT!:
Designing load-control valves requires specialist technical knowledge and product knowledge. Safety applications must be verified by adequate tests to ensure safety in actual use.

9.1 Assembly / disassembly

IMPORTANT!:
The valve may only be used for its intended purpose within its nominal rating. If you plan to use it outside the nominal rating, you must contact the valve manufacturer. The ultimate responsibility for safety in the installation and use rests with the end-machine manufacturer of the mobile application.

IMPORTANT!:
Seal kit with the external seals is available on application.

IMPORTANT!:
The port threads conform to DIN 3852-2.
Use screws to DIN EN ISO 4762, grade 12.9, to mount the valve.
Tightening torques as per the manufacturer's instructions. These can be found on our website:
www.bucherhydraulics.com
(LOGIntern area; registration required)

IMPORTANT!:
Protect seals and flange faces from damage.
The mating flange face must be of the quality specified in the data sheet!
Pay attention to the port designations.

10 Application examples

10.1 Cylinder application

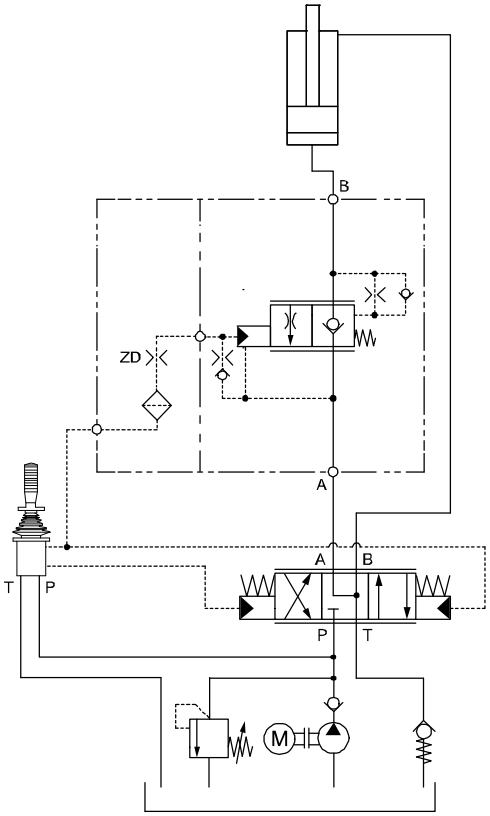

10.2 Motor application

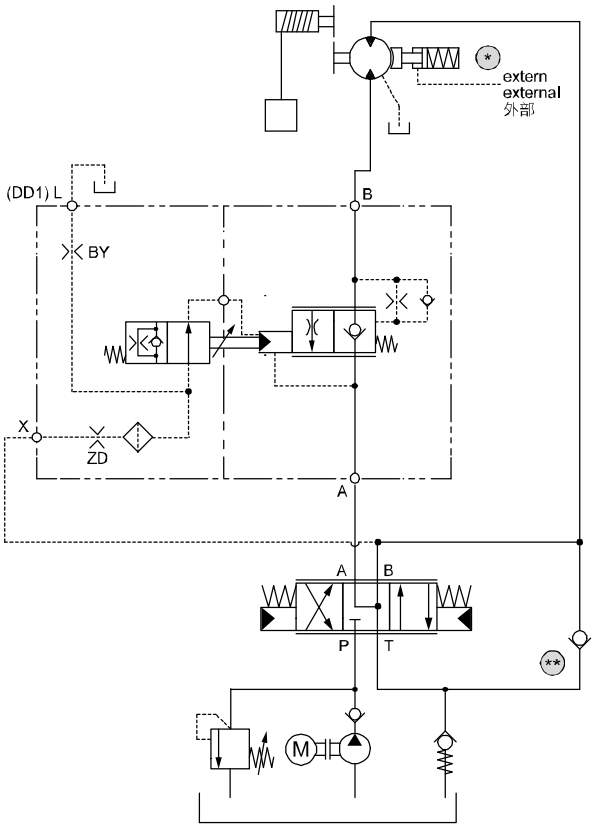

RECOMMENDATION

* Mechanical brake, externally controlled for reduced lowering pressures in the supply line of the motor.

** Anti-cavitation check valve for additional safety.

ATTENTION!:
Cavitation danger!

Control from the opposite line:
To open the valve, we recommend control from the opposite line. This method ensures that the actuator cannot run ahead of the incoming flow.

Brake release
(unlocking the mechanical brake):
The mechanical brake must be released before the load-control valve for winches is opened. This prevents draining of the return line to the main spool before the valve opens, thus preventing load fall.

11 Ordering code

e.g. CINDY 25 – B – C N D – S250 – A – G… – __ – … – ___

CINDY	=	series
25	=	size 25
B	=	model / version
C	=	cartridge design
N	=	NBR (Nitrile) seals **(standard)**
V	=	FKM (Viton) seals
T	=	MIL (low temperature) seals
D	=	incl. screws Geomet (ZL) 12.9 DIN 912
S250	=	standard spool, B → A 250 l/min [66 gpm] *
S320	=	standard spool, B → A 320 l/min [84.53 gpm] *
S400	=	standard spool, B → A 400 l/min [105.65 gpm] *
S500	=	standard spool, B → A 500 l/min [132.08 gpm] *
A	=	influenced by return-line pressure in A
L	=	not influenced by return-line pressure
G…	=	standard damping cover
D…	=	stroke-dependent damping cover
K…	=	stroke-dependent damping cover with metering grooves
H…	=	hydromechanical stroke-limiting cover
R…	=	hydraulic pressure-reducing valve cover [1)]
E…	=	electroproportional pressure-reducing valve cover [1)]
...	=	orifice combination (is factory-defined)
(blank)	=	without load pressure overcompensation
25	=	with load pressure overcompensation 25% / compensation orifice KD Ø 1.8
50	=	with load pressure overcompensation 50% / compensation orifice KD Ø 1.5
52	=	with load pressure overcompensation 52% / compensation orifice KD Ø 1.4
54	=	with load pressure overcompensation 54% / compensation orifice KD Ø 1.3
24DI	=	data for “E” cover only: AMP Junior Timer, 24 VDC **(standard)**
12DI	=	data for “E” cover only: AMP Junior Timer, 12 VDC
24DT	=	data for “E” cover only: Deutsch plug DT04-2P, 24 VDC
12DT	=	data for “E” cover only: Deutsch plug DT04-2P, 12 VDC

*) measured at 33 bar [478 psi] Δp from B → A.

[1)] Only available in return pressure independent version (L).

WWW.SUMY.IR

12 Related data sheets

Reference	Description
300-D-9050098	Project Engineering & User Information, Series CINDY, SAE-flange, manifold and cartridge design
300-D-9050102	Technical design sheet for CINDY load-control valves in cylinder applications
300-S-9050030	Spare Parts Information, Series CINDY as cartridge design

IMPORTANT!:
Additional documentation and 3D models (.stp or .igs format) can be downloaded from *www.bucherhydraulics.com*
(LOGintern area; registration is necessary)

We also offer customised solutions.
Please talk to our sales team.

info.ch@bucherhydraulics.com www.bucherhydraulics.com

© 2023 by Bucher Hydraulics AG, CH-6345 Neuheim
All rights reserved.
Data is provided for the purpose of product description only, and must not be construed as warranted characteristics in the legal sense. The information does not relieve users from the duty of conducting their own evaluations and tests. Because the products are subject to continual improvement, we reserve the right to amend the product specifications contained in this catalogue.

Classification: 430.325.360.305.350.325.305.310

Leak-Free Load-Control Valves size 40

Q_{max} = 1300 l/min [340 gpm], p_{max} = 420 bar [6000 psi]
Seat-valve, two-stage hydraulic, cartridge design
Series CINDY 40-B-C...

- Two-stage load-control valve and bypass check valve are functionally combined in one coaxial valve assembly
- Leak-free load holding
- Pilot ratio 113:1
- The control assembly is guaranteed to close
  it closes even with a broken spring
- Various pilot-pressure ranges can be chosen
- All exposed parts with zinc-nickel plating
- Various types of pilot control, matched to your system, can be supplied
- Low-noise operation thanks to specially shaped control grooves

1 Description

Whenever large loads are to be precisely moved, placed and held, or work access platforms must maintain their position and withstand high forces, then leak-free load-control valves from the CINDY series are the right solution.
Load-control valves in this series prevent hydraulic actuators from running ahead of the available oil supply. In one valve, they combine the functions of load-holding, safety and pipe-rupture protection. Leak-free load-control valves in this series are ideally suited for use in high-pressure applications up to 420 bar (6000 psi). With a variety of optional components, the series can be extended and adapted to the requirements of the system.

2 Symbol

Variant A

Influenced by return-line pressure
(pressure in A is additive to opening pilot pressure).

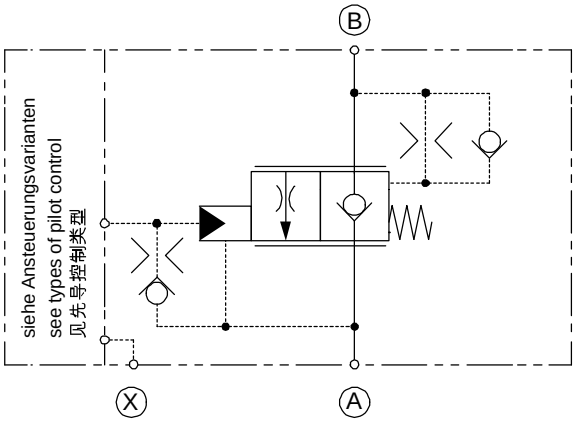

Variant L

Not influenced by return-line pressure
(drain line is required).

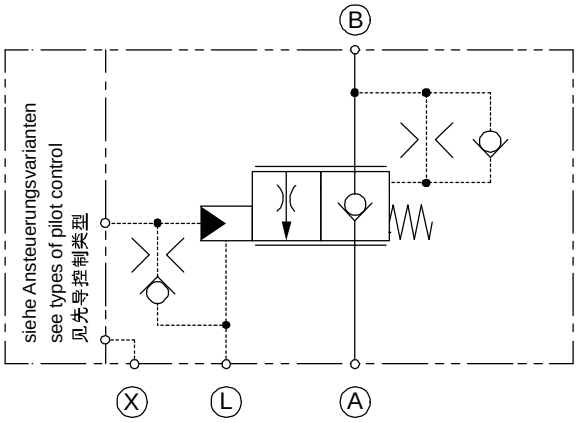

3 Technical data

General characteristics			Description, value, unit		
Designation			Leak-free load-control valve		
Design			Seat-valve, two-stage hydraulic, cartridge design		
Size			Size 40		
Mounting method			Factory standards 1x cylinder screw with internal hexagon M10x22 DIN EN ISO 4762, – grade 12.9		
Actuator / drive ports		A, B	∅ 38 mm	[∅ 1.49 inch]	(factory standards)
Pilot ports	(internal variant)	X	∅ 4 mm	[∅ 0.15 inch]	(factory standards)
	(external variant)	X	G ¼“,	ISO 1179-1	
Drain ports		L	∅ 4 mm	[∅ 0.15 inch]	(factory standards)
Weight			4.5 … 4.8 kg	[9.92…17.63 lbs]	
Mounting attitude			unrestricted		
Ambient temperature range			- 25 °C … +100 °C (others on application)	[-13 °F … +212 °F]	
Surface corrosion protection			Outside parts: Zinc-nickel coating Mounting screws zinc-flake coated (e.g. with Geomet® finish)		

Hydraulic characteristics		Description, value, unit	
Maximum pressure at the flow- or return port A		420 bar	[6000 psi]
Maximum pressure at the actuator- / load port B		420 bar	[6000 psi]
Maximum pressure at the pilot port X		420 bar (restrictions possible - see section types of pilot control 4.4)	[6000 psi]
Maximum flow rate		1300 l/min (higher flow rates on application)	[340 gpm]
Flow direction		A → B, free flow through check valve B → A, controlled flow	
Operator type		hydraulic proportional or electro proportional	
Opening pilot ratio		113:1	
Hydraulic fluid		HL and HLP mineral oil to DIN 51 524; for other fluids, please contact BUCHER	
Hydraulic fluid temperature range		- 25 °C … + 80 °C	[-13 °F … +176 °F]
Temperature rating of seals	NBR FKM MIL	- 25 °C… + 100 °C - 20 °C … + 200 °C - 55 °C … + 80 °C	[-13 °F … +212 °F] [-4 °F … +392 °F] [-67 °F … +176 °F]
Viscosity range		2.8…1500 mm^2/s (cSt), recommended 10…380 mm^2/s (cSt)	
Minimum fluid cleanliness Cleanliness class to ISO 4406 : 1999		class 20/17/14	

4 Construction and function

The functions of the control assembly are subdivided into the following positions:

4.1 Neutral position

The load pressure and the compression spring act on the control spool in the closing direction. The valve is closed with no leakage.

4.2 Lifting (flow direction from A → B)

The pump pressure at port A opens the valve against the “light” compression spring and the load. The pilot spool and control spool move together in the opening direction. Oil flows from A → B and the valve functions as a check valve.

4.3 Lowering (flow direction from B → A)

The pilot pressure at port X acts on the pilot piston and against the control springs. The pilot spool opens. As a result, the load pressure B is discharged to port A via the metering grooves in the pilot spool. The progressive characteristic of the pre-opening phase ensures that lowering begins smoothly and without jerks.
If the pilot pressure at port X is increased, the pilot spool opens further. The change in the pressure conditions at the control spool means that it follows the pilot spool in the opening direction. The oil flows from B → A.

Neutral position
(Symbol for 4.1)

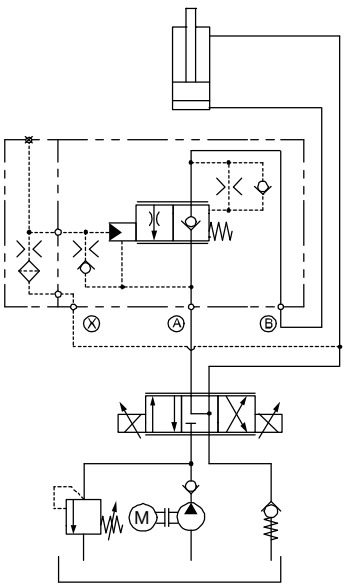

Lifting (A → B)
(Symbol for 4.2)

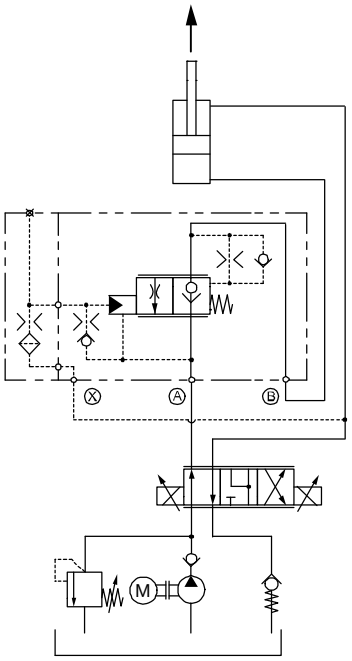

Lowering (B → A)
(Symbol for 4.3)

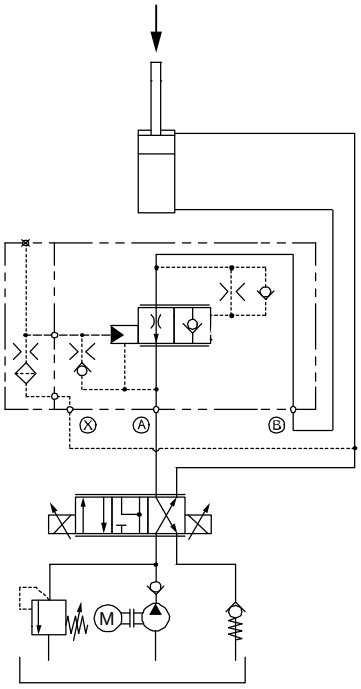

4.4 Types of pilot control

Cover types / applications	Type “G“	Type “D“	Type “K“	Type “H“	Type “R“	Type “E“
Cylinder application (external pilot signal)	✓✓	×	×	✓	✓	✓✓
Cylinder application (pilot signal from opposite line)		✓✓			×	×
Motors / Winches	×		✓✓	×	×	×
Motors for slewing drives	×	✓✓	×	×	×	×

Explanation of symbols: ✓✓ = normal ✓ = possible × = not possible

4.4.1 Standard damping cover, type “G“

Pilot control type “G“ is recommended for external control, or with low-oscillation applications. This control cover can only be damped with an inlet orifice. Stroke-dependent damping is not possible with this cover.

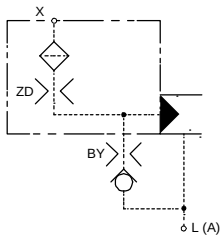

4.4.2 Stroke-dependent damping cover, type “D“

The type “D“ cover is recommended for handling pilot signals that come from the opposite actuator line and for applications that are susceptible to oscillations. Thanks to the pilot piston's stroke-dependent damping system, oscillation-prone applications can be started in a very stable manner. The starting pressure peak is reduced because in the starting zone the valve responds quickly to the pilot signal.

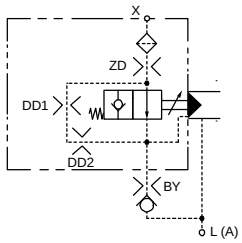

4.4.3 Stroke-dependent damping cover with metering grooves, type “K“

The stroke-dependent damping cover with metering grooves, type “K“, is recommended for applications that are susceptible to oscillations, such as hydraulic motors (e.g. winches).

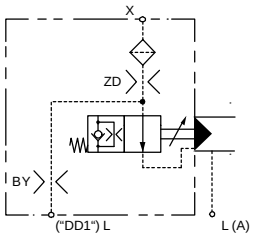

4.4.4 Hydromechanical stroke-limiting cover, type “H“

With the type “H“ pilot control, the stroke of the load-control spool can be limited from outside the valve to achieve a particular flow rate or speed. This reduces the valve resolution.

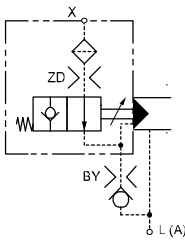

4.4.5 Hydraulic pressure-reducing valve cover type “R“

Pilot control type “R“ denotes the version in which the incoming pilot pressure is reduced to a preset level. This function is needed when working with compensated and over-compensated applications, and the actual pilot pressure in the pilot chamber must not exceed 19 bar. The small leakage flow from the pressure reducing valve is discharged through an internal drain connection. The maximum allowable inlet pressure at port X is 100 bar. Because compensated and over-compensated systems must always be externally controlled, an inlet orifice is not normally required.

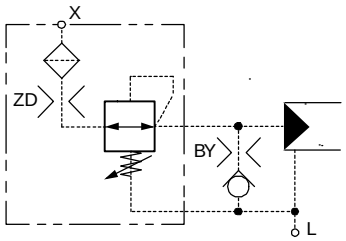

IMPORTANT!: Only available in return pressure independent version (L).

4.4.6 Electroproportional pressure-reducing valve cover type “E“

The type “E“ control can be used for electroproportional control. In this case, the inlet signal at port X is reduced to a level proportional to the applied control current. The small flow of pilot oil from the pressure reducing valve is led away through an internal drain connection or a separate drain port. This control type is only intended for external pilot oil supplies, and it is essential to use a back-pressure-independent body (L).

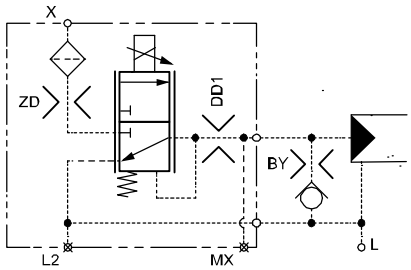

Hydraulic characteristics	Description, value, unit	
Pilot-oil supply at X	min. 30 bar max. 350 bar	[min. 435 psi] [max. 5000 psi] *
Permissible tank pressure at L (static)	max. 5 bar	[max. 70 psi]
Flow rate (pump) available at X	min. 2 l/min	[min. 0.5 gpm]
Pilot-oil consumption / Leakage flow rate	< 0.1 l/min (I = 0) < 0.5 l/min (I = max)	[< 0.026 gpm (I = 0)] [< 0.125 gpm (I = max)]
Hysteresis (with PWM control; pulse frequency 100 Hz)	0.5 bar	[7.1 psi]
Pilot-pressure control range	0…20 bar	[0…285 psi] *

* Other values on request

Electrical characteristics	Description, value, unit	
Nominal voltage	12 V DC	24 V DC
Resistance R 20	5.3 Ω ± 5 %	21.2 Ω ± 5 %
Maximum current at 100% duty cycle	1500 mA	750 mA
Power consumption at operating temperature (with increased resistance)	18 W	18 W
Control current at start of opening	~ 600 mA	~ 300 mA
Control current when fully open	~ 1400 mA	~ 700 mA
Relative duty cycle	100 %	
Insulation class	180 °C (VDE 0580:H)	[356 °F]
Protection class	IP 65 (DIN VDE 0470)	
Connector plug type	AMP Junior Timer Deutsch Plug DT04-2P	

IMPORTANT!: Only available in return pressure independent version (L).

General:

The series-connection of the orifices allows the opening time, the closing time, the start of opening, and the full extent of opening to be matched to the requirements of the application.

5 Performance graphs

measured with oil viscosity 33 mm²/s (cSt)

Dp = f (Q) Pressure drop - Flow rate characteristic

Lifting A → B
(through cartridge valve only)

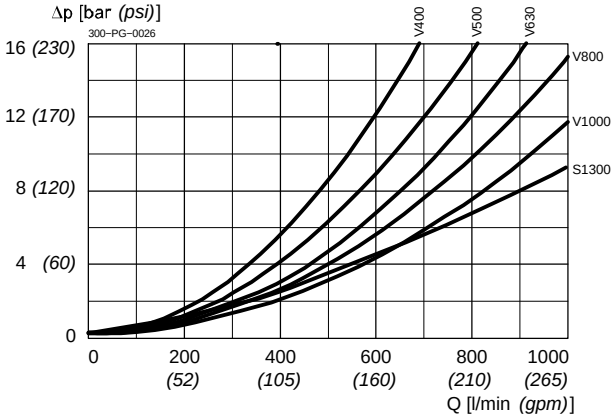

Dp = f (Q) Pressure drop - Flow rate characteristic

Lowering B → A
(through cartridge valve only)

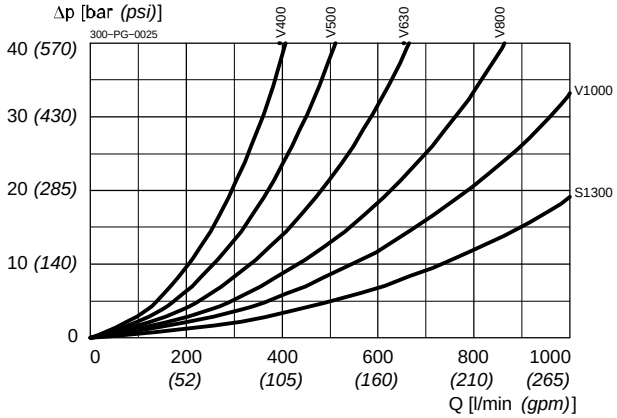

6 Available modules

6.1 Pilot oil connection (X) internal via mounting hole

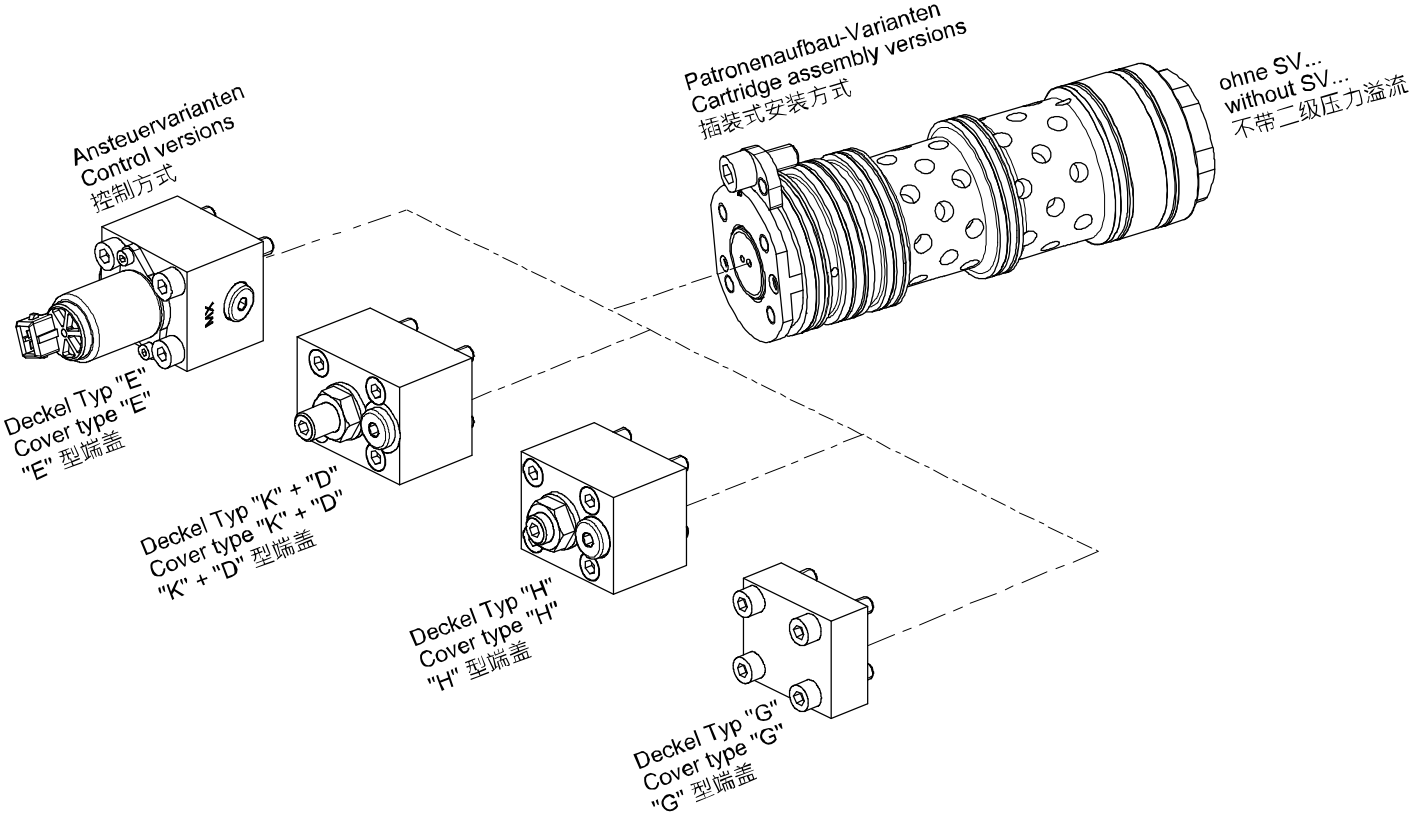

6.2 Pilot oil connection (X) external piped via cover

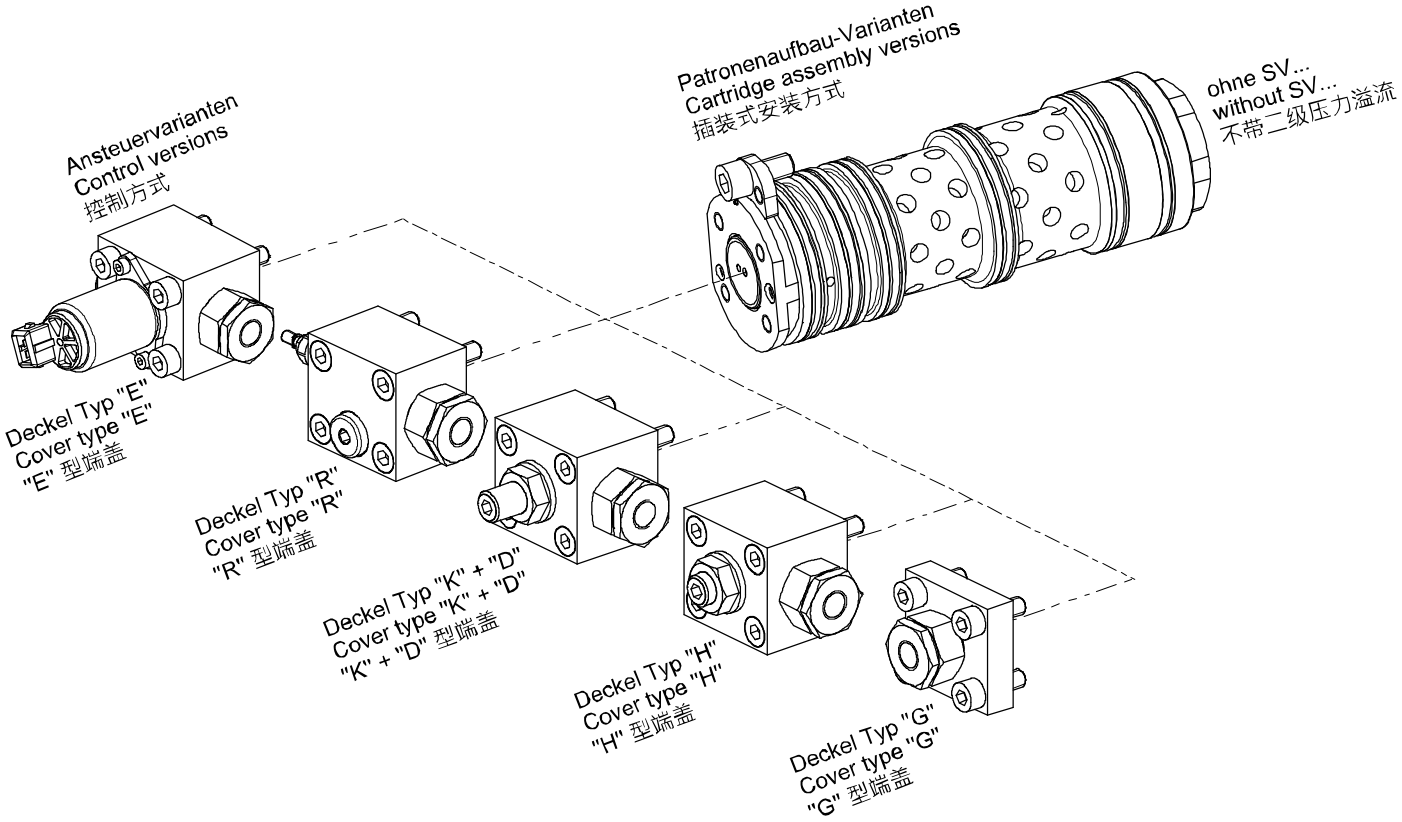

7 Dimensions & sectional view

7.1 Body and control variants for control oil connection (X) internal via mounting hole

Standarddämpfungsdeckel Typ "G"
Standard damping cover type "G"
"G" 型标准阻尼功能端盖

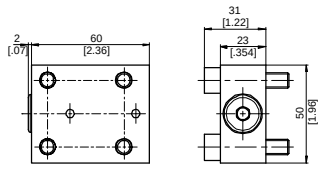

Hubabhängiger Dämpfungsdeckel Typ "D"
Hubabhängiger Kerbendämpfungsdeckel Typ "K"
Stroke-dependent damping cover type "D"
Stroke-dependent damping cover with metering grooves type "K"
"D" 型行程相关阻尼功能端盖
"K" 型行程相关阻尼功能端盖，带沟槽

* = werkseitige Einstellung
* = factory setting
* = 工厂设定

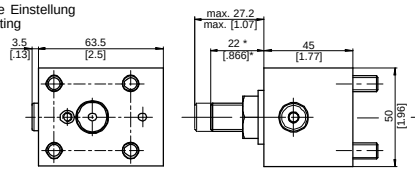

Hydromechanischer Hubbegrenzungsdeckel Typ "H"
Hydromechanical stroke-limiting cover type "H"
"H" 型机-液行程限制功能端盖

* = werkseitige Einstellung
* = factory setting
* = 工厂设定

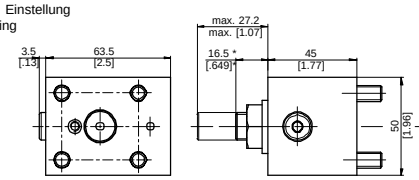

Elektronischer proportional Druckminderventilteckel Typ "E"
Electronic proportional pressure reducing valve cover type "E"
"E" 型电比例减压阀功能端盖

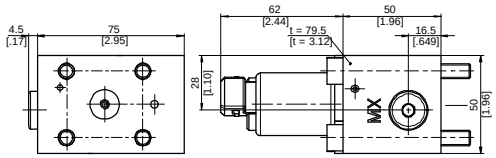

Beispiel für die Masseinheit:
Example for the dimensional units:
尺寸单位举例:
0.79 = 0.79 mm millimeter
[.031] = 0.031 ˝ inch

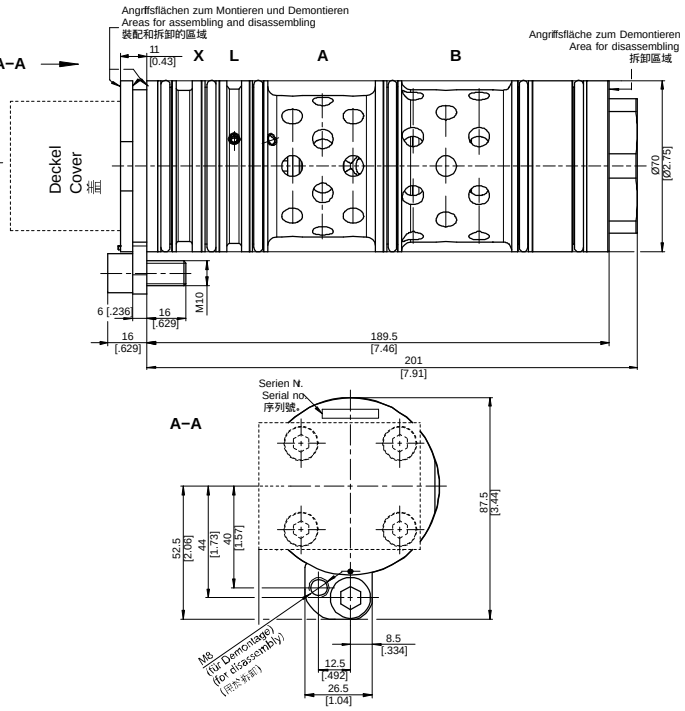

ATTENTION!:
The force for assembling or disassembling the load control valve, should only be applied on the designated faces or threads.
Assemble or disassemble by hits on the load control valve is not allowed – Danger of loosing pressure loaded parts!

7.2 Body and control variants for pilot oil connection (X) externally pipped via cover

Standarddämpfungsdeckel Typ "G"
Standard damping cover type "G"
"G" 型标准阻尼功能端盖

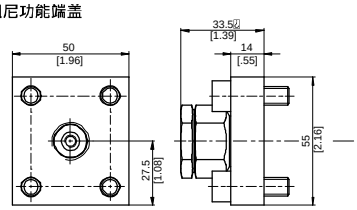

Hubabhängiger Dämpfungsdeckel Typ "D"
Hubabhängiger Kerbendämpfungsdeckel Typ "K"
Stroke-dependent damping cover type "D"
Stroke-dependent damping cover with metering grooves type "K"
"D" 型行程相关阻尼功能端盖
"K" 型行程相关阻尼功能端盖，带沟槽
* = werkseitige Einstellung
* = factory setting
* = 工厂设定

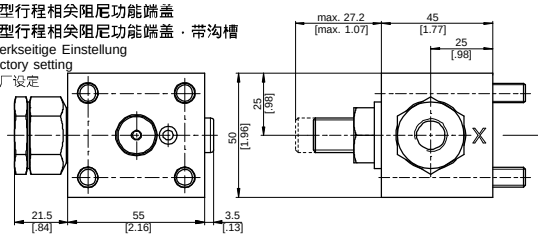

Hydromechanischer Hubbegrenzungsdeckel Typ "H"
Hydromechanical stroke-limiting cover type "H"
"H" 型机-液行程限制功能端盖
* = werkseitige Einstellung
* = factory setting
* = 工厂设定

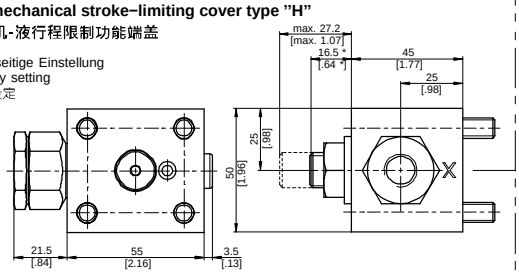

Hydraulischer Druckminderventildeckel Typ "R"
Hydraulic pressure-reducing valve cover type "R"
"R" 型减压阀功能端盖

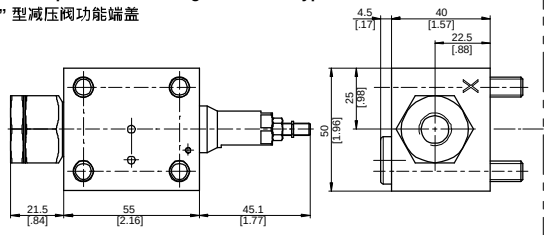

Elektronischer proportional Druckminderventilteckel Typ "E"
Electronic proportional pressure reducing valve cover type "E"
"E" 型电比例减压阀功能端盖

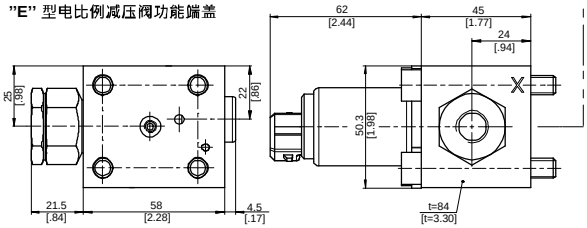

Beispiel für die Masseinheit:
Example for the dimensional units:
尺寸单位举例:

0.79	=	0.79 mm	millimeter
[.031]	=	0.031 ˝	inch

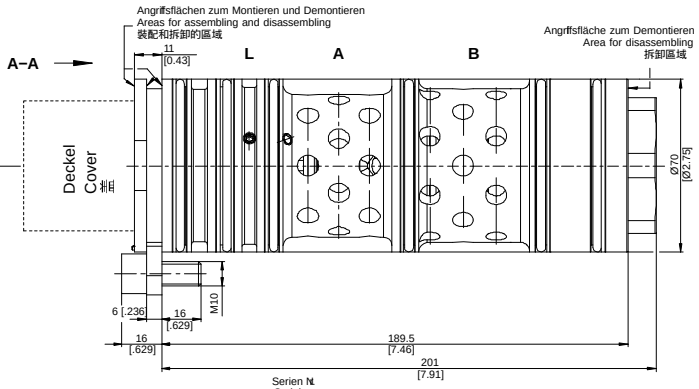

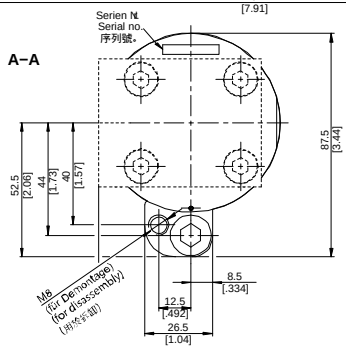

ATTENTION!:
The force for assembling or disassembling the load control valve, should only be applied on the designated faces or threads.
Assemble or disassemble by hits on the load control valve is not allowed – Danger of loosing pressure loaded parts!

7.3 Cavity type

With the external pilot oil connection (X) variant, the bore X (Ø4) incl. recess can be omitted.
With the version A (influenced by return-line pressure), the bore L (Ø4) incl. recess can be omitted.

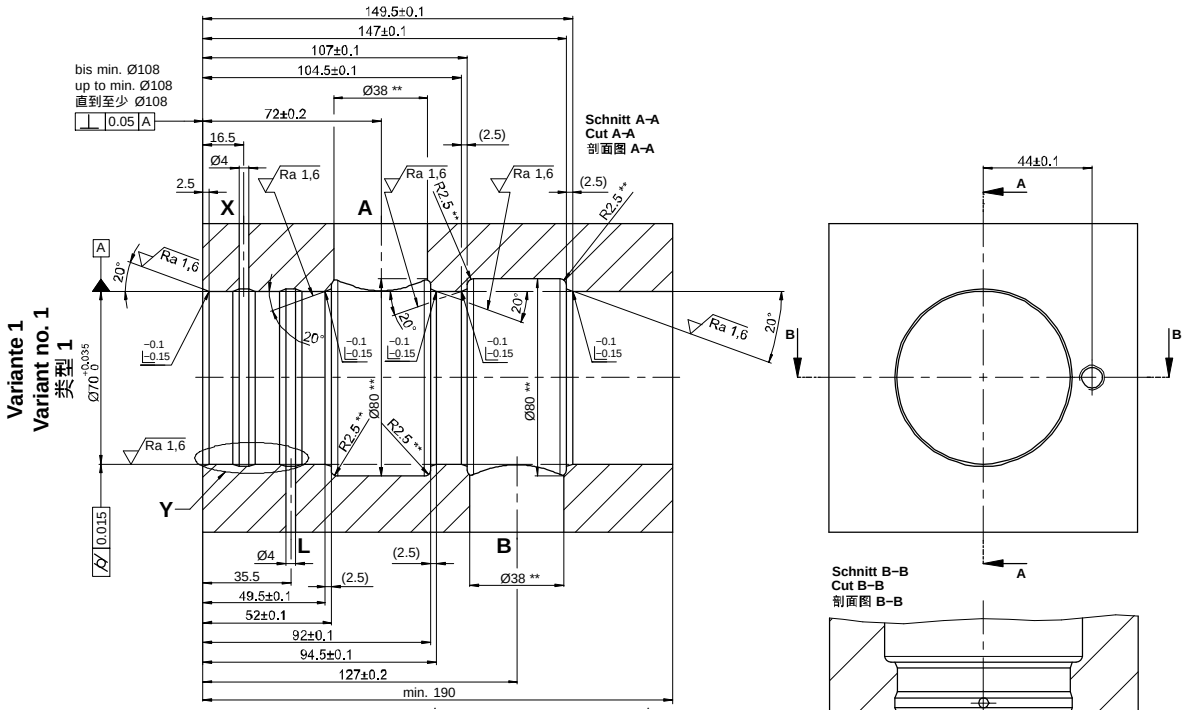

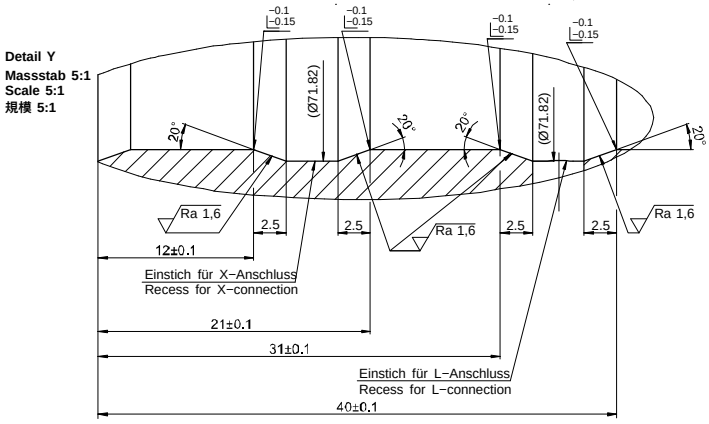

Mit ** markierte Mass sind empfohlene Masse.
Abweichungen gegenüber der Empfehlung haben gegebenenfalls Einfluss auf die hydraulischen Kennwerte. Die Kennlinien im Datenblatt basieren auf Ermittlungen mit der dargestellten Aufnahmebohrung. Auslegung des Blockes bezüglich Materialauswahl und allgemeine Festigkeit liegen ausserhalb des Verantwortungsbereiches von Bucher Hydraulics.
All dimensions marked with ** are recommended dimensions. Deviations from the recommendation may have an influence on the hydraulic characteristic values. The characteristic curves in the data sheet are based on measurements with the represented cavity. Design of the block, regarding choice of materials and its general strength are beyond the scope of responsibility of Bucher Hydraulics.
標有**的所有尺寸均為推薦尺寸從推薦的偏差可能對液壓特性值的影響。數據表中的特徵曲線基於所表示的腔的測量值。
關於材料選擇及其一般強度的模塊設計超出Bucher Hydraulics的責任範圍。

Variante 2
(übrige Masse – siehe Variante 1)

Variant no. 2
(all other dimensions – see variant no. 1)

类型 2
(其它所有尺寸 – 参见变量1)

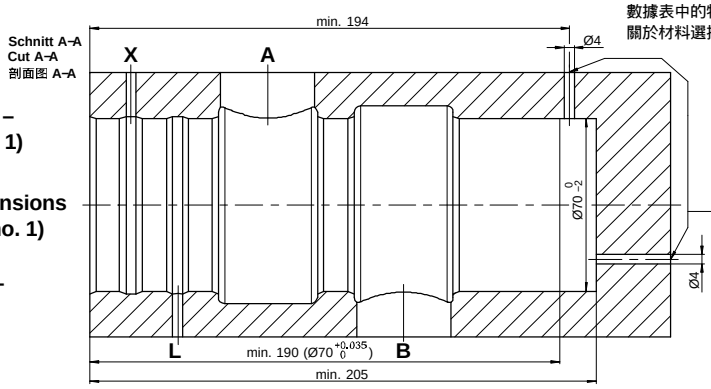

Die Bohrung Ø70 0 -2 muss mit einer Bohrung Ø4 (radial oder axial) drucklos mit Atmosphäre verbunden werden!

The hole Ø70 0 -2 must be connected to atmosphere by a hole of Ø4, either in axial or radial direction!

Ø70 0 -2 孔必须通过一个 Ø4 的轴向 (或径向) 孔连通大气

Toleranzen nach:
Tolerances according to DIN ISO 2768-mK
公差基于:

Ra 6,3

-0.1 -0.2 | +0.2 +0.1

	Ra 1,6	Ra 6,3
Rauheitsklasse Roughness class 粗糙度等级	N7	N9
Rz [µm]	10	40

8 Options

8.1 Load-pressure-overcompensated model

This version with compensation orifice (KD) is recommended for long boom systems, e.g. the telescopic booms of mobile cranes. The compensation, alternatively the overcompensation, has the effect of limiting the speed as the load pressure increases, and this in turn raises machine safety levels.
During the lowering function B → A (with a maximum pilot pressure of 19.8 bar), the cylinder's retraction speed is influenced by the compensation orifice KD. In spite of the constantly changing kinematics and the resulting increase in the load pressure, the lowering speed:

- is held almost constant even without a compensation orifice (standard model)
- is reduced with a compensation orifice (overcompensated model)

The compensation orifice in the pilot spool has the effect that, as the load pressure increases, the pressure acting on the control spool in the closing direction also rises. As a result, the control spool throttles the B → A flow area. To ensure that this function operates properly, these valve types must always be externally piloted.

ATTENTION!:
A prerequisite is that the pilot pressure acting on the pilot piston is limited to max 19.8 bar. A higher pressure will prevent the speed-limiting function from working.

IMPORTANT!:
To ensure that this function operates properly, the back-pressure-independent variant L should be used.

Characteristic curves (examples)

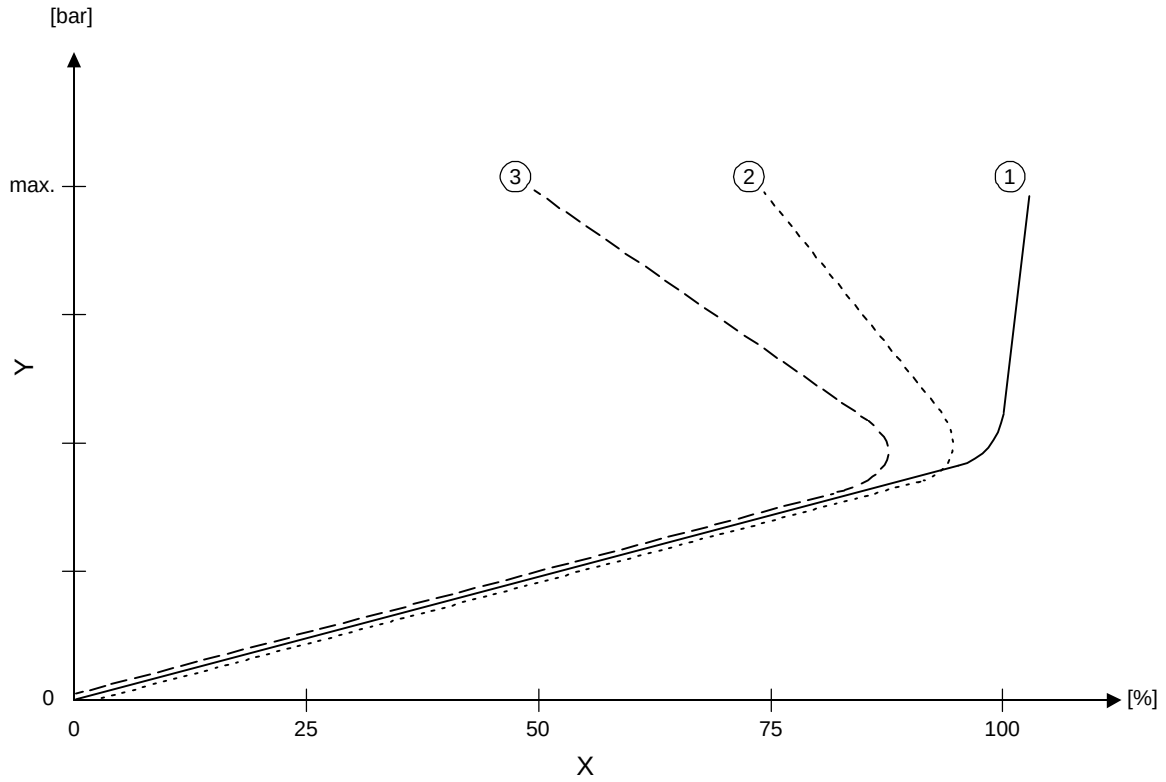

X	Flow B → A
Y6	Load pressure

1	Load-pressure-compensated model (without compensation orifice, KD)
2	Approx. 25 % overcompensated (KD Ø 1.8)
3	Approx. 50 % overcompensated (KD Ø 1.5)

9 Safety instructions

IMPORTANT!:
Designing load-control valves requires specialist technical knowledge and product knowledge. Safety applications must be verified by adequate tests to ensure safety in actual use.

9.1 Assembly / disassembly

IMPORTANT!:
The valve may only be used for its intended purpose within its nominal rating. If you plan to use it outside the nominal rating, you must contact the valve manufacturer.
The ultimate responsibility for safety in the installation and use rests with the end-machine manufacturer of the mobile application.

IMPORTANT!:
Seal kit with the external seals is available on application.

IMPORTANT!:
The port threads conform to DIN 3852-2.
Use screws to DIN EN ISO 4762, grade 12.9, to mount the valve.
Tightening torques as per the manufacturer's instructions. These can be found on our website:
www.bucherhydraulics.com
(LOGIntern area; registration required)

IMPORTANT!:
Protect seals and flange faces from damage.
The mating flange face must be of the quality specified in the data sheet!
Pay attention to the port designations.

10 Application examples

10.1 Cylinder application

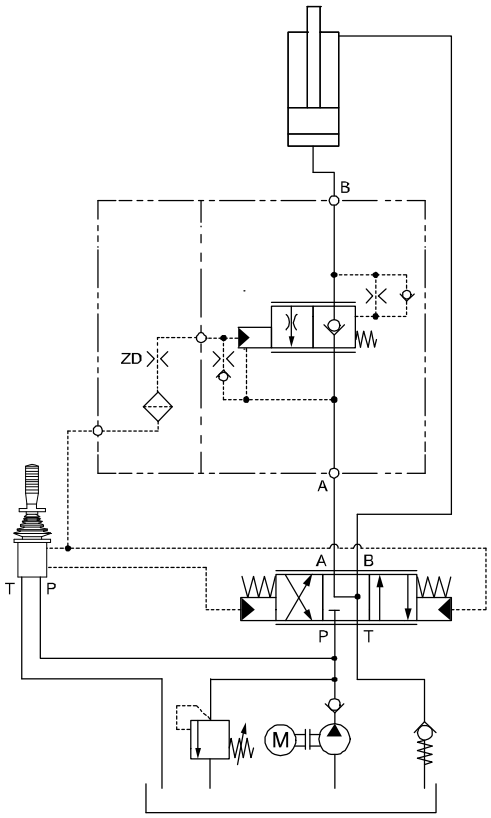

10.2 Motor application

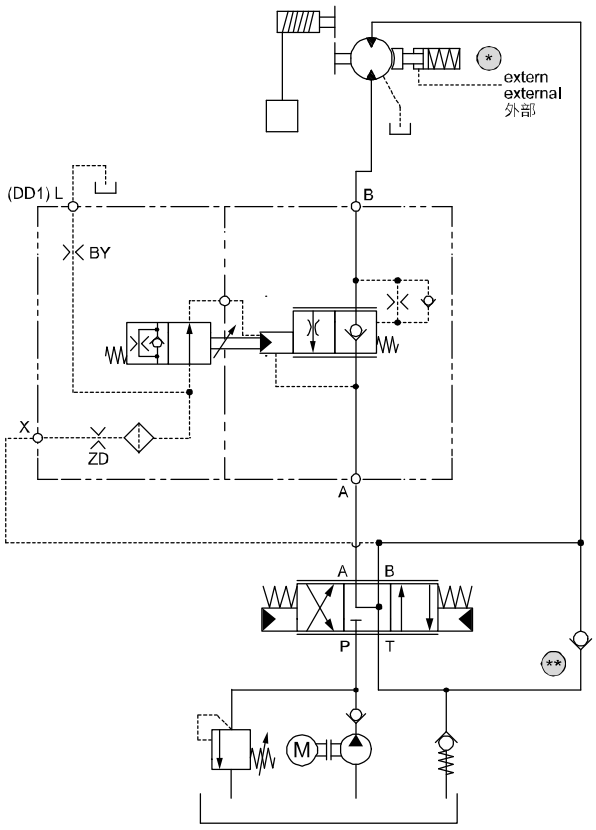

RECOMMENDATION

* Mechanical brake, externally controlled for reduced lowering pressures in the supply line of the motor.

** Anti-cavitation check valve for additional safety.

ATTENTION!:
Cavitation danger!

Control from the opposite line:
To open the valve, we recommend control from the opposite line. This method ensures that the actuator cannot run ahead of the incoming flow.

Brake release
(unlocking the mechanical brake):
The mechanical brake must be released before the load-control valve for winches is opened. This prevents draining of the return line to the main spool before the valve opens, thus preventing load fall.

11 Ordering code

e.g. CINDY 40 – B – C N D – V0400 – A – G… – __ – I – … – __

CINDY	=	series
40	=	size 40
B	=	model / version
C	=	cartridge design
N	=	NBR (Nitrile) seals **(standard)**
V	=	FKM (Viton) seals
T	=	MIL (low temperature) seals
D	=	Geomet (zinc flake) mtg. screw M10x22-12.9
V0400	=	progressive-spool, lowering flow rate 400 l/min [105 gpm] *
V0500	=	progressive-spool, lowering flow rate 500 l/min [132 gpm] *
V0630	=	progressive-spool, lowering flow rate 630 l/min [167 gpm] *
V0800	=	progressive-spool, lowering flow rate 800 l/min [212 gpm] *
V1000	=	progressive-spool, lowering flow rate 1000 l/min [265 gpm] *
S1300	=	standard-spool, lowering flow rate 1300 l/min [340 gpm] *
A	=	influenced by return-line pressure in A
L	=	not influenced by return-line pressure
G…	=	standard cover
D…	=	stroke-dependent damping cover
K…	=	stroke-dependent damping cover with metering grooves
H…	=	hydromechanical stroke-limiting cover
R…	=	hydraulic pressure-reducing valve cover [1)]
E…	=	electroproportional pressure-reducing valve cover [1)]
...	=	orifice combination (is factory-defined)
I	=	internal: pilot oil connection (X) via mounting hole
E	=	external: pilot oil connection (X) pipped via cover
(blank)	=	without load pressure overcompensation
25	=	with load pressure overcompensation 25% / compensation orifice KD Ø 1.8
50	=	with load pressure overcompensation 50% / compensation orifice KD Ø 1.5
52	=	with load pressure overcompensation 52% / compensation orifice KD Ø 1.4
54	=	with load pressure overcompensation 54% / compensation orifice KD Ø 1.3
24DI	=	data for “E” cover only: AMP Junior Timer, 24 VDC **(standard)**
12DI	=	data for “E” cover only: AMP Junior Timer, 12 VDC
24DT	=	data for “E” cover only: Deutsch plug DT04-2P, 24 VDC
12DT	=	data for “E” cover only: Deutsch plug DT04-2P, 12 VDC

*) at 33 bar [478 psi] Dp from B → A
other lowering flow rates on application.

[1)] Only available in return pressure independent version (L).

12 Related data sheets

Reference	Description
300-D-9050098	Project Engineering & User Information, Series CINDY, SAE-flange, manifold and cartridge design
300-D-9050102	Technical design sheet for CINDY load-control valves in cylinder applications
300-S-9050030	Spare Parts Information, Series CINDY as cartridge design

IMPORTANT!:
Additional documentation and 3D models (.stp or .igs format) can be downloaded from *www.bucherhydraulics.com*
(LOGintern area; registration is necessary)

We also offer customised solutions.
Please talk to our sales team.

info.ch@bucherhydraulics.com www.bucherhydraulics.com

© 2023 by Bucher Hydraulics AG, CH-6345 Neuheim
All rights reserved.
Data is provided for the purpose of product description only, and must not be construed as warranted characteristics in the legal sense. The information does not relieve users from the duty of conducting their own evaluations and tests. Because the products are subject to continual improvement, we reserve the right to amend the product specifications contained in this catalogue.

Classification: 430.325.355.330325

BUCHER hydraulics

WWW.SUMY.IR

Valve accessory
Threaded port body

Type series: DC-12

- For cavity DC
- All external parts with zinc-nickel coating according to DIN EN ISO 19598
- Functionless threaded port body
- Port sizes of the main connections G 1/2"
- Optimized Δp values
- Suitable for piping assembly
- Manifold mounting possible

Technical data

General Characteristics	Description, value, unit
Function group	Valve accessory
Function	Threaded port body
Maximum operating pressure	450 bar
Weight	1.65 kg
Cavity acc. factory standard	For cavity DC
Surface protection	All external parts with zinc-nickel coating according to DIN EN ISO 19598

Dimensions and sectional view

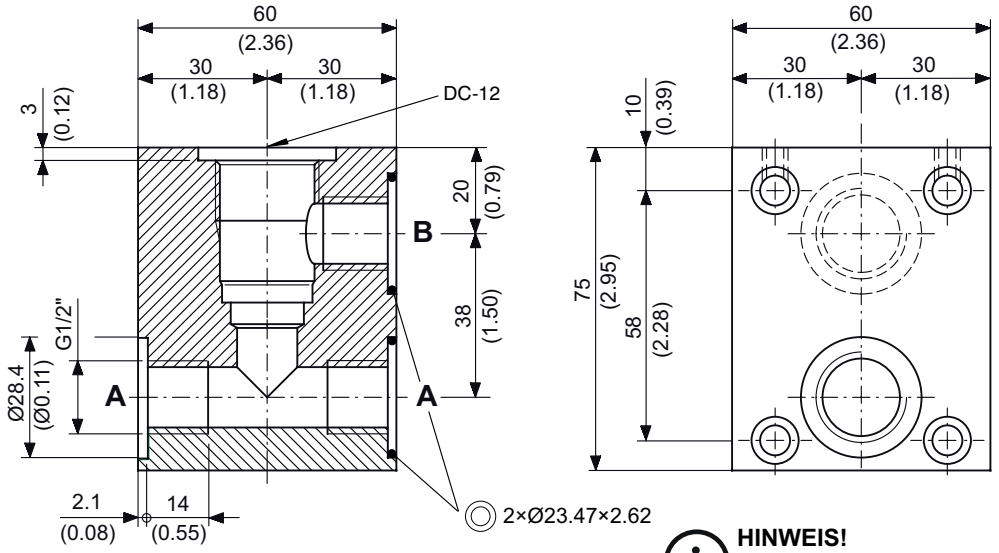

HINWEIS!
NOTE!
Anschluss A ist auswählbar
Port A is selectable

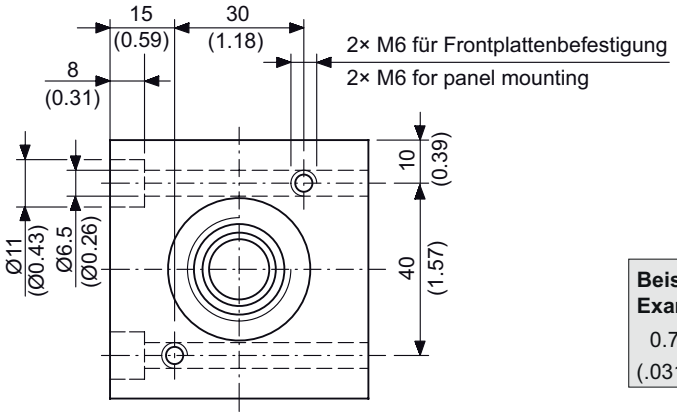

Beispiel für die Masseinheit:
Example for the dimensional units:
0.79 = 0.79 mm millimeter
(.031) = 0.031" inch

Installation information

ATTENTION!
For manifold mounting the maximum operating pressure is 250 bar. Cylinder cap screws M6/12.9 have to be used. In the case of manifold-mounting, the customer must plug port A (G1/2") with a threaded plug. Higher pressures on request.

info.ch@bucherhydraulics.com **www.bucherhydraulics.com**

© 2021 by Bucher Hydraulics AG Frutigen, 3714 Frutigen, Switzerland

All rights reserved.
Data is provided for the purpose of product description only, and must not be construed as warranted characteristics in the legal sense. The information does not relieve users from the duty of conducting their own evaluations and tests. Because the products are subject to continual improvement, we reserve the right to amend the product specifications contained in this catalogue.

BUCHER hydraulics

WWW.SUMY.IR

Valve accessory
Threaded port body

Type series: GBH-38...

- For cavity BH/C0820
- All external parts with zinc-nickel plating according to DIN EN ISO 19598
- Functionless threaded port body
- Port sizes of the main connections G 3/8"
- Optimized Δp values
- Suitable for piping assembly
- Can be fixed with 2× cap screws

Technical data

General characteristics	Description, value, unit
Function group	Valve accessory
Function	Threaded port body
Maximum operating pressure	420 bar
Weight	0.9 kg
Cavity acc. factory standard	For cavity BH/C0820
Surface protection	All external parts with zinc-nickel plating according to DIN EN ISO 19598

Dimensions and sectional view

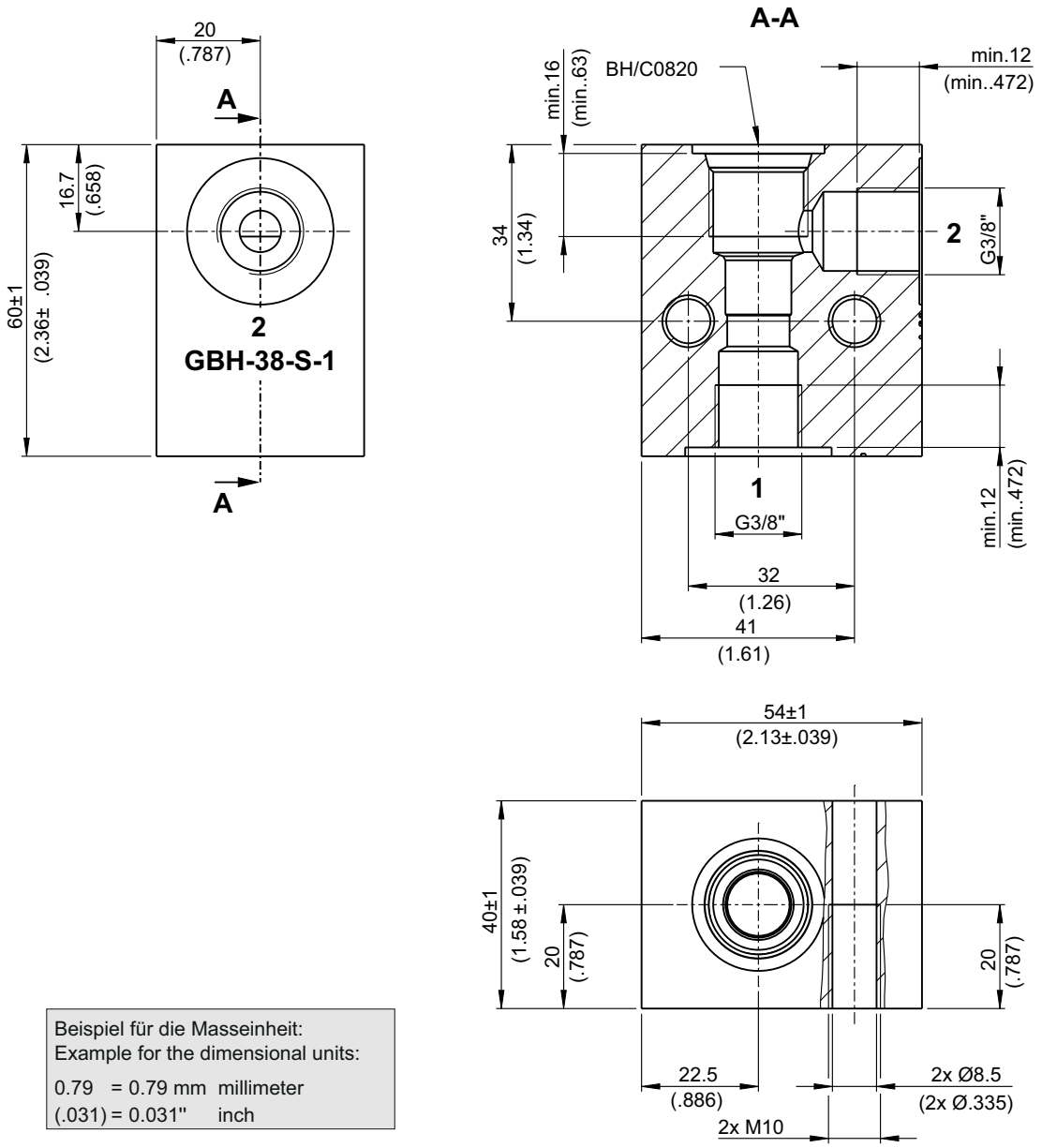

Beispiel für die Masseinheit:
Example for the dimensional units:

0.79 = 0.79 mm millimeter
(.031) = 0.031" inch

Ordering code

Ex. GBH - 38 - S - 1

GBH = threaded port body for cavity BH/C0820
38 = connection size of the main ports G 3/8"
S = material design steel *(standard)*
A = material design aluminium with limited performance data *(on request)*
1…9 = technical design no. (omit when ordering)

info.ch@bucherhydraulics.com **www.bucherhydraulics.com**

© 2022 by Bucher Hydraulics AG Frutigen, 3714 Frutigen, Switzerland

All rights reserved.
Data is provided for the purpose of product description only, and must not be construed as warranted characteristics in the legal sense. The information does not relieve users from the duty of conducting their own evaluations and tests. Because the products are subject to continual improvement, we reserve the right to amend the product specifications contained in this catalogue.

BUCHER hydraulics

WWW.SUMY.IR

General information
Cavity

Type series: AB

Dimensions and sectional view

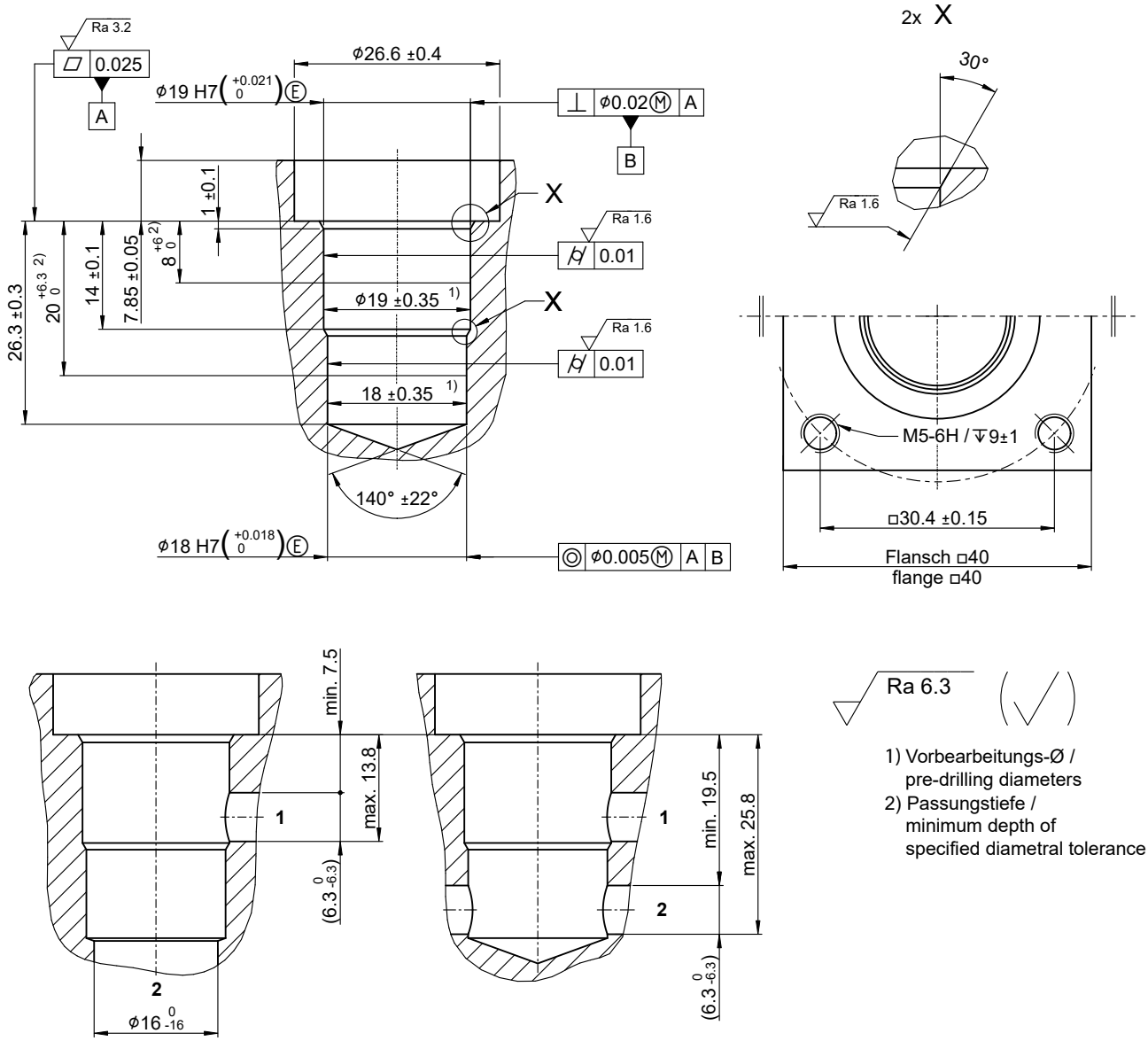

1) Vorbearbeitungs-Ø / pre-drilling diameters
2) Passungstiefe / minimum depth of specified diametral tolerance

Installation information

ATTENTION!
You must maintain the specified positional and diametral tolerances. To ensure trouble-free operation of the screw-in cartridges, we strongly recommend that pilot drilling, boring, reaming and cavity thread-cutting are always performed in one setup.

NOTE!
We offer form tool sets for sale or hire. For further information, see data sheet 400-P-040011.

NOTE!
Cavity type to factory standard.

info.ch@bucherhydraulics.com www.bucherhydraulics.com

© 2024 by Bucher Hydraulics AG Frutigen, 3714 Frutigen, Switzerland

All rights reserved.
Data is provided for the purpose of product description only, and must not be construed as warranted characteristics in the legal sense. The information does not relieve users from the duty of conducting their own evaluations and tests. Because the products are subject to continual improvement, we reserve the right to amend the product specifications contained in this catalogue.

BUCHER hydraulics

WWW.SUMY.IR

Valve accessory
Threaded port body

Type series: GABA

- For cavity AB
- All external parts with zinc-nickel coating according to DIN EN ISO 19598
- Functionless threaded port body
- Port sizes of the main connections G 3/8"
- Optimized Δp values
- Suitable for piping assembly
- Can be fixed with 2x cap screws

Technical data

General Characteristics	Description, value, unit
Function group	Valve accessory
Function	Threaded port body
Maximum operating pressure	315 bar
Weight	0.9 kg
Cavity acc. factory standard	For cavity AB
Surface protection	All external parts with zinc-nickel coating according to DIN EN ISO 19598

Dimensions and sectional view

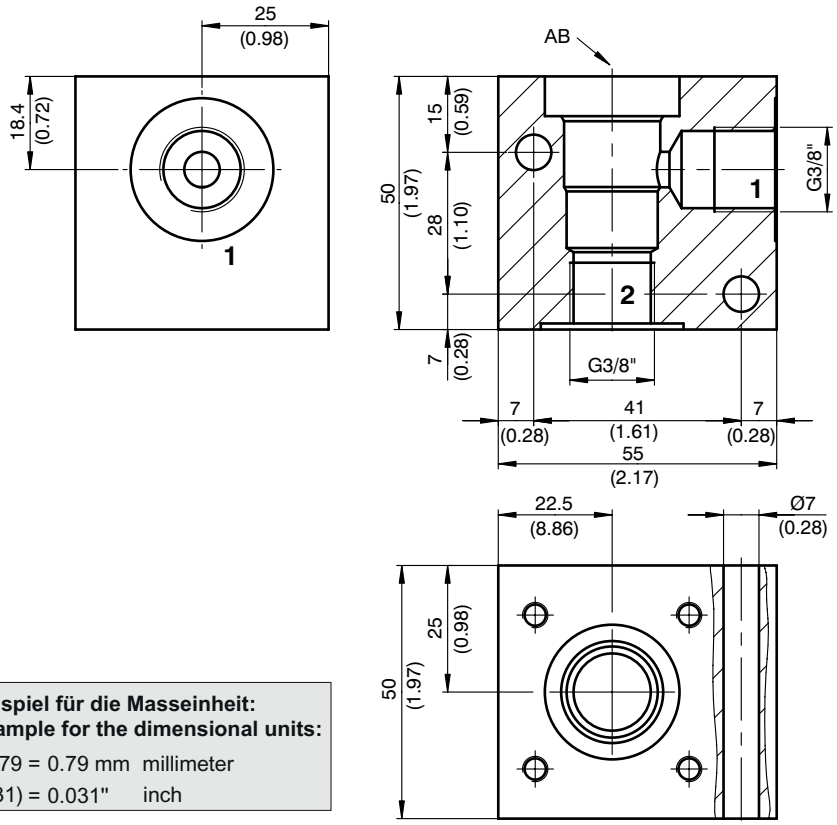

Beispiel für die Masseinheit:
Example for the dimensional units:

0.79 = 0.79 mm millimeter
(.031) = 0.031" inch

info.ch@bucherhydraulics.com **www.bucherhydraulics.com**

© 2021 by Bucher Hydraulics AG Frutigen, 3714 Frutigen, Switzerland

All rights reserved.
Data is provided for the purpose of product description only, and must not be construed as warranted characteristics in the legal sense. The information does not relieve users from the duty of conducting their own evaluations and tests. Because the products are subject to continual improvement, we reserve the right to amend the product specifications contained in this catalogue.

BUCHER hydraulics

WWW.SUMY.IR

Valve accessory
Threaded port body

Type series: GALA

- For cavity AL
- All external parts with zinc-nickel coating according to DIN EN ISO 19598
- Functionless threaded port body
- Port sizes of the main connections G 3/8"
- Optimized Δp values
- Suitable for piping assembly
- Can be fixed with 2x cap screws

Technical data

General Characteristics	Description, value, unit
Function group	Valve accessory
Function	Threaded port body
Maximum operating pressure	420 bar
Weight	0.60 kg
Cavity acc. factory standard	For cavity AL
Surface protection	All external parts with zinc-nickel coating according to DIN EN ISO 19598

Dimensions and sectional view

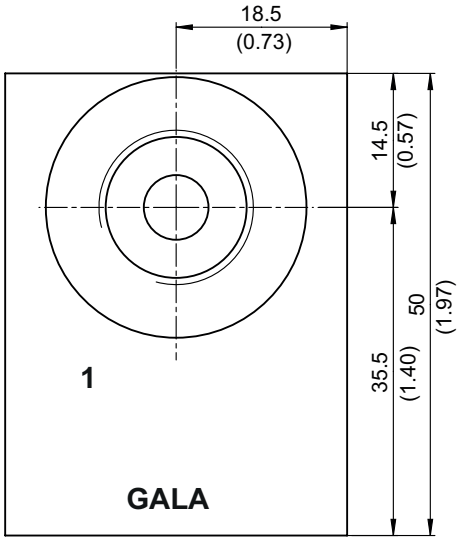

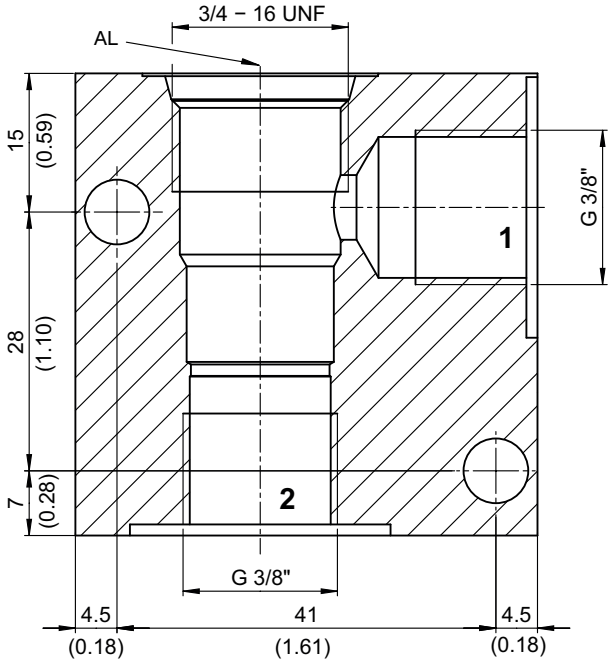

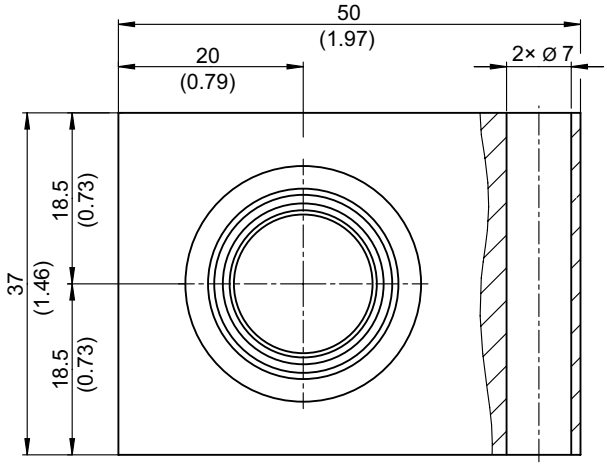

Beispiel für die Masseinheit:
Example for the dimensional units:

0.79 = 0.79 mm millimeter
(.031) = 0.031" inch

info.ch@bucherhydraulics.com **www.bucherhydraulics.com**

© 2021 by Bucher Hydraulics AG Frutigen, 3714 Frutigen, Switzerland

All rights reserved.
Data is provided for the purpose of product description only, and must not be construed as warranted characteristics in the legal sense. The information does not relieve users from the duty of conducting their own evaluations and tests. Because the products are subject to continual improvement, we reserve the right to amend the product specifications contained in this catalogue.

BUCHER hydraulics

WWW.SUMY.IR

Valve accessory
Threaded port body

Type series: GALMA

- For cavity ALM
- All external parts with zinc-nickel coating according to DIN EN ISO 19598
- Functionless threaded port body
- Port sizes of the main connections G 3/8"
- Optimized Δp values
- Suitable for piping assembly
- Can be fixed with 2x cap screws

Technical data

General Characteristics	Description, value, unit
Function group	Valve accessory
Function	Threaded port body
Maximum operating pressure	350 bar
Weight	0.6 kg
Cavity acc. factory standard	For cavity ALM
Surface protection	All external parts with zinc-nickel coating according to DIN EN ISO 19598

Dimensions and sectional view

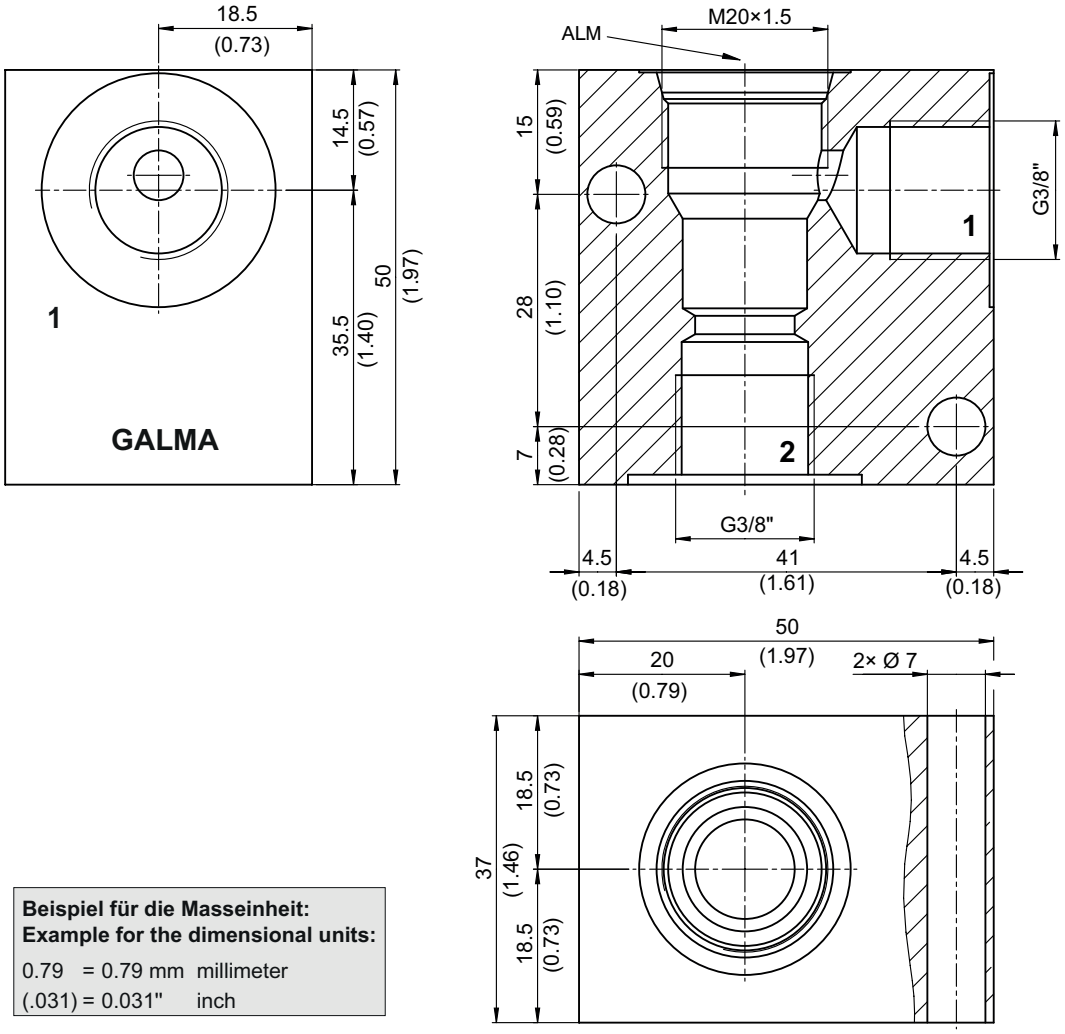

Beispiel für die Masseinheit:
Example for the dimensional units:

0.79 = 0.79 mm millimeter
(.031) = 0.031" inch

info.ch@bucherhydraulics.com **www.bucherhydraulics.com**

© 2021 by Bucher Hydraulics AG Frutigen, 3714 Frutigen, Switzerland

All rights reserved.
Data is provided for the purpose of product description only, and must not be construed as warranted characteristics in the legal sense. The information does not relieve users from the duty of conducting their own evaluations and tests. Because the products are subject to continual improvement, we reserve the right to amend the product specifications contained in this catalogue.

BUCHER hydraulics
WWW.SUMY.IR

General information
Cavity

Type series: AY

Dimensions and sectional view

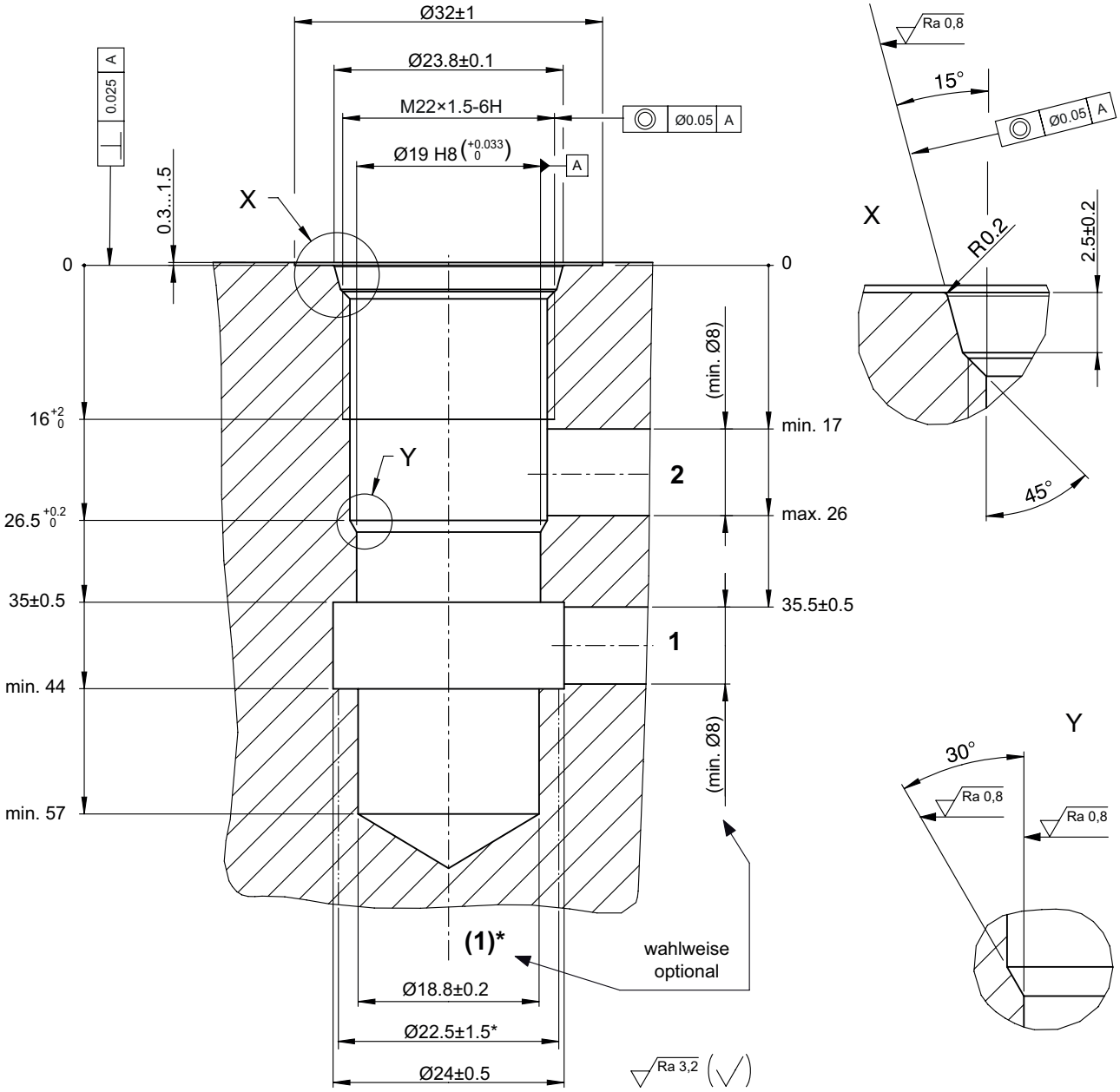

Beispiel für die Masseinheit:
Example for the dimensional units:
0.79 = 0.79 mm millimeter

Installation information

ATTENTION!
You must maintain the specified positional and diametral tolerances. To ensure trouble-free operation of the screw-in cartridges, we strongly recommend that pilot drilling, boring, reaming and cavity thread-cutting are always performed in one setup.

NOTE!
We offer form tool sets for sale or hire. For further information, see data sheet 400-P-040011.

NOTE!
Cavity type to factory standard.

info.ch@bucherhydraulics.com **www.bucherhydraulics.com**

© 2023 by Bucher Hydraulics AG Frutigen, 3714 Frutigen, Switzerland

All rights reserved.
Data is provided for the purpose of product description only, and must not be construed as warranted characteristics in the legal sense. The information does not relieve users from the duty of conducting their own evaluations and tests. Because the products are subject to continual improvement, we reserve the right to amend the product specifications contained in this catalogue.

WWW.SUMY.IR

Valve accessory
Threaded port body

Type series: GAYA

- For cavity AY
- All external parts with zinc-nickel coating according to DIN EN ISO 19598
- Functionless threaded port body
- Port sizes of the main connections G 3/8"
- Optimized Δp values
- Suitable for piping assembly
- Can be fixed with 2x cap screws

Technical data

General Characteristics	Description, value, unit
Function group	Valve accessory
Function	Threaded port body
Maximum operating pressure	250 bar
Weight	1.27 kg
Cavity acc. factory standard	For cavity AY
Surface protection	All external parts with zinc-nickel coating according to DIN EN ISO 19598

Dimensions and sectional view

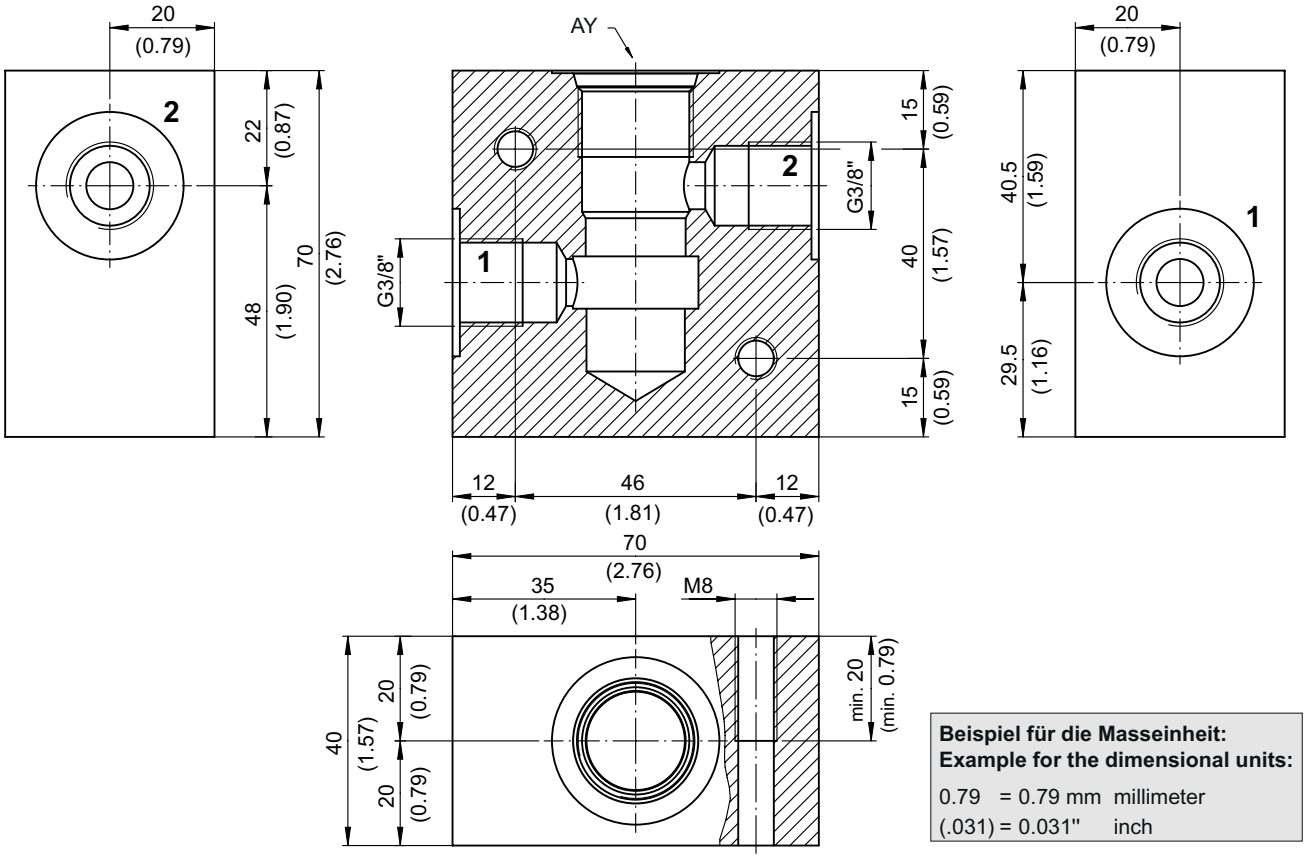

Beispiel für die Masseinheit:
Example for the dimensional units:

0.79 = 0.79 mm millimeter
(.031) = 0.031" inch

info.ch@bucherhydraulics.com **www.bucherhydraulics.com**

© 2021 by Bucher Hydraulics AG Frutigen, 3714 Frutigen, Switzerland

All rights reserved.
Data is provided for the purpose of product description only, and must not be construed as warranted characteristics in the legal sense. The information does not relieve users from the duty of conducting their own evaluations and tests. Because the products are subject to continual improvement, we reserve the right to amend the product specifications contained in this catalogue.

BUCHER hydraulics

WWW.SUMY.IR

Valve accessory
Threaded port body

Type series: GAX-12-...

- For cavity AX/C1020
- All external parts with zinc-nickel coating according to DIN EN ISO 19598
- Functionless threaded port body
- Port sizes of the main connections G 1/2"
- Optimized Δp values
- Suitable for piping assembly
- Can be fixed with 2× cap screws

Technical data

General Characteristics	Description, value, unit
Function group	Valve accessory
Function	Threaded port body
Maximum operating pressure	420 bar
Weight	1.64 kg
Cavity acc. factory standard	For cavity AX/C1020
Surface protection	All external parts with zinc-nickel coating according to DIN EN ISO 19598

Dimensions and sectional view

Beispiel für die Masseinheit:
Example for the dimensional units:

0.79 = 0.79 mm millimeter
(.031) = 0.031" inch

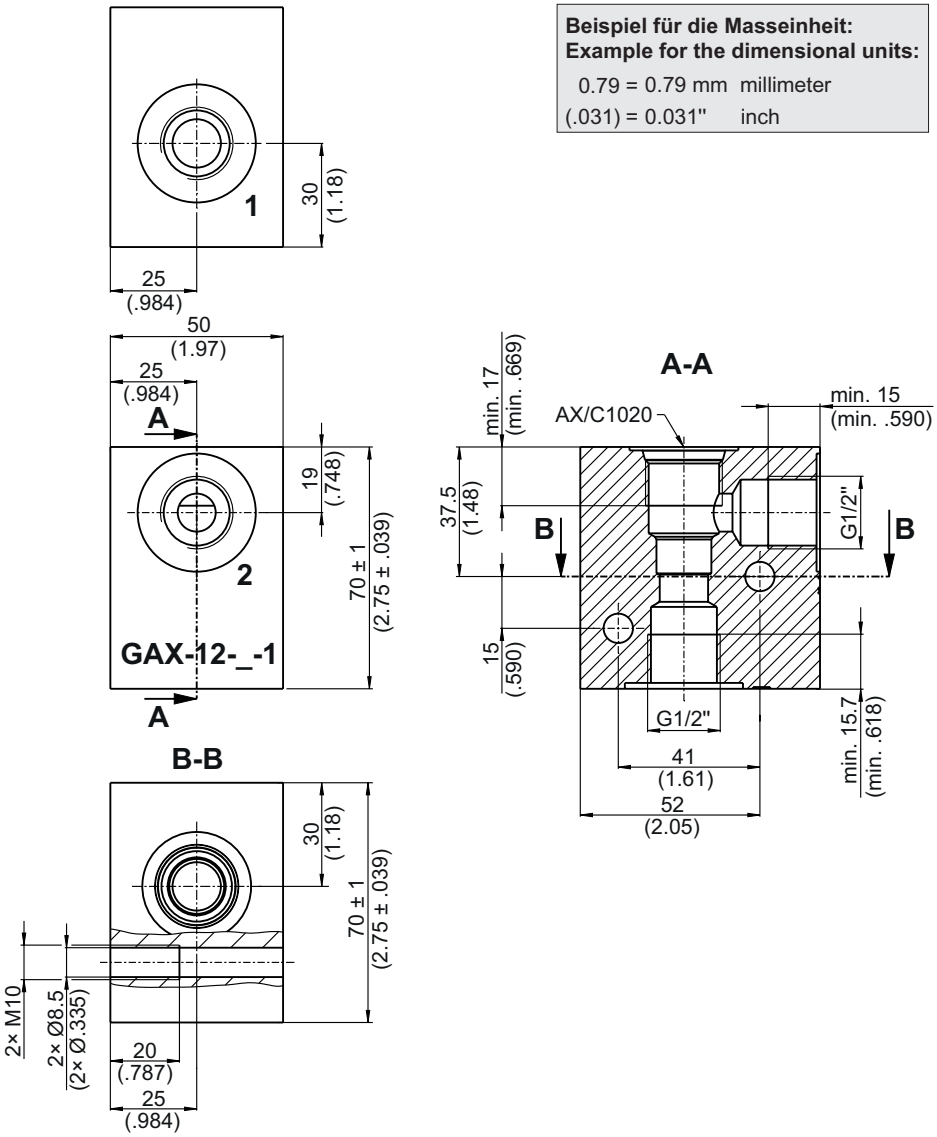

Ordering code

Ex. GAX - 12 - S - 1

GAX	= threaded port body for cavity AX/C1020
12	= connection size of the main ports G 1/2"
S	= material design steel *(standard)*
A	= material design aluminium with limited performance data *(on request)*
1…9	= technical design no. (omit when ordering)

info.ch@bucherhydraulics.com **www.bucherhydraulics.com**

© 2021 by Bucher Hydraulics AG Frutigen, 3714 Frutigen, Switzerland

All rights reserved.
Data is provided for the purpose of product description only, and must not be construed as warranted characteristics in the legal sense. The information does not relieve users from the duty of conducting their own evaluations and tests. Because the products are subject to continual improvement, we reserve the right to amend the product specifications contained in this catalogue.

BUCHER hydraulics

WWW.SUMY.IR

Valve accessory
Threaded port body

Type series: GCDHA

- For cavity DH
- All external parts with zinc-nickel coating according to DIN EN ISO 19598
- Functionless threaded port body
- Port sizes of the main connections G 3/4"
- Optimized Δp values
- Suitable for piping assembly
- Can be fixed with 2x cap screws

Technical data

General Characteristics	Description, value, unit
Function group	Valve accessory
Function	Threaded port body
Maximum operating pressure	350 bar
Weight	1.75 kg
Cavity acc. factory standard	For cavity DH
Surface protection	All external parts with zinc-nickel coating according to DIN EN ISO 19598

Dimensions and sectional view

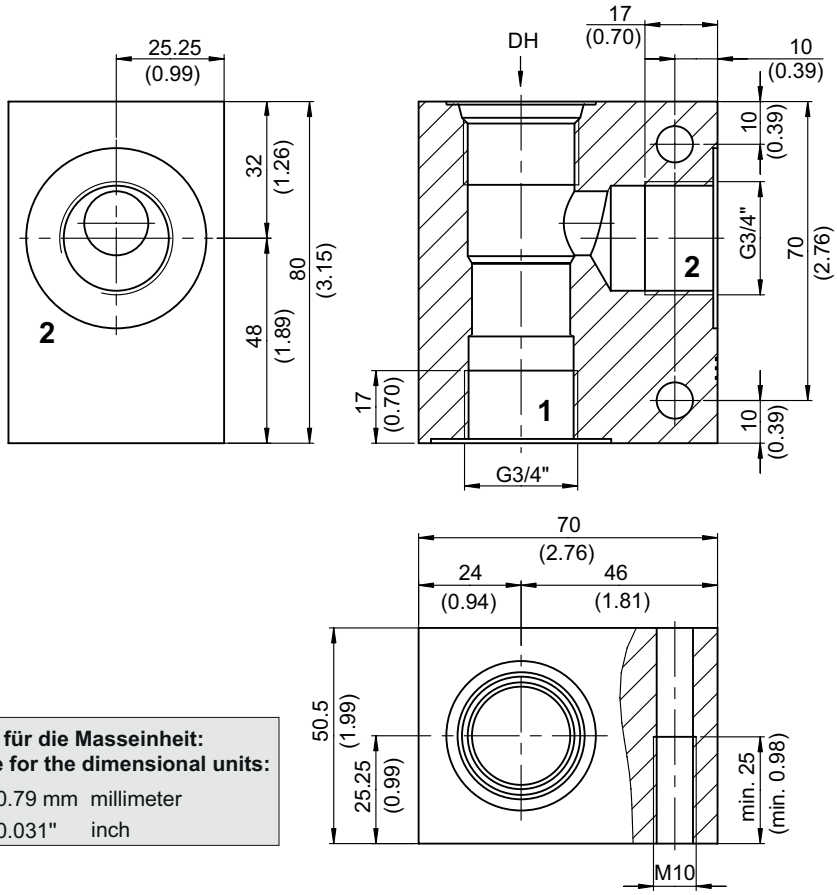

Beispiel für die Masseinheit:
Example for the dimensional units:

0.79 = 0.79 mm millimeter
(.031) = 0.031" inch

info.ch@bucherhydraulics.com **www.bucherhydraulics.com**

© 2021 by Bucher Hydraulics AG Frutigen, 3714 Frutigen, Switzerland

All rights reserved.
Data is provided for the purpose of product description only, and must not be construed as warranted characteristics in the legal sense. The information does not relieve users from the duty of conducting their own evaluations and tests. Because the products are subject to continual improvement, we reserve the right to amend the product specifications contained in this catalogue.

BUCHER hydraulics

WWW.SUMY.IR

Valve accessory
Threaded port body

Type series: GERA

- For cavity ER
- All external parts with zinc-nickel coating according to DIN EN ISO 19598
- Functionless threaded port body
- Port sizes of the main connections G 3/4"
- Optimized Δp values
- Suitable for piping assembly
- Can be fixed with 2× cap screws

Technical data

General Characteristics	Description, value, unit
Function group	Valve accessory
Function	Threaded port body
Maximum operating pressure	420 bar
Weight	2 kg
Cavity acc. factory standard	For cavity ER
Surface protection	All external parts with zinc-nickel coating according to DIN EN ISO 19598

Dimensions and sectional view

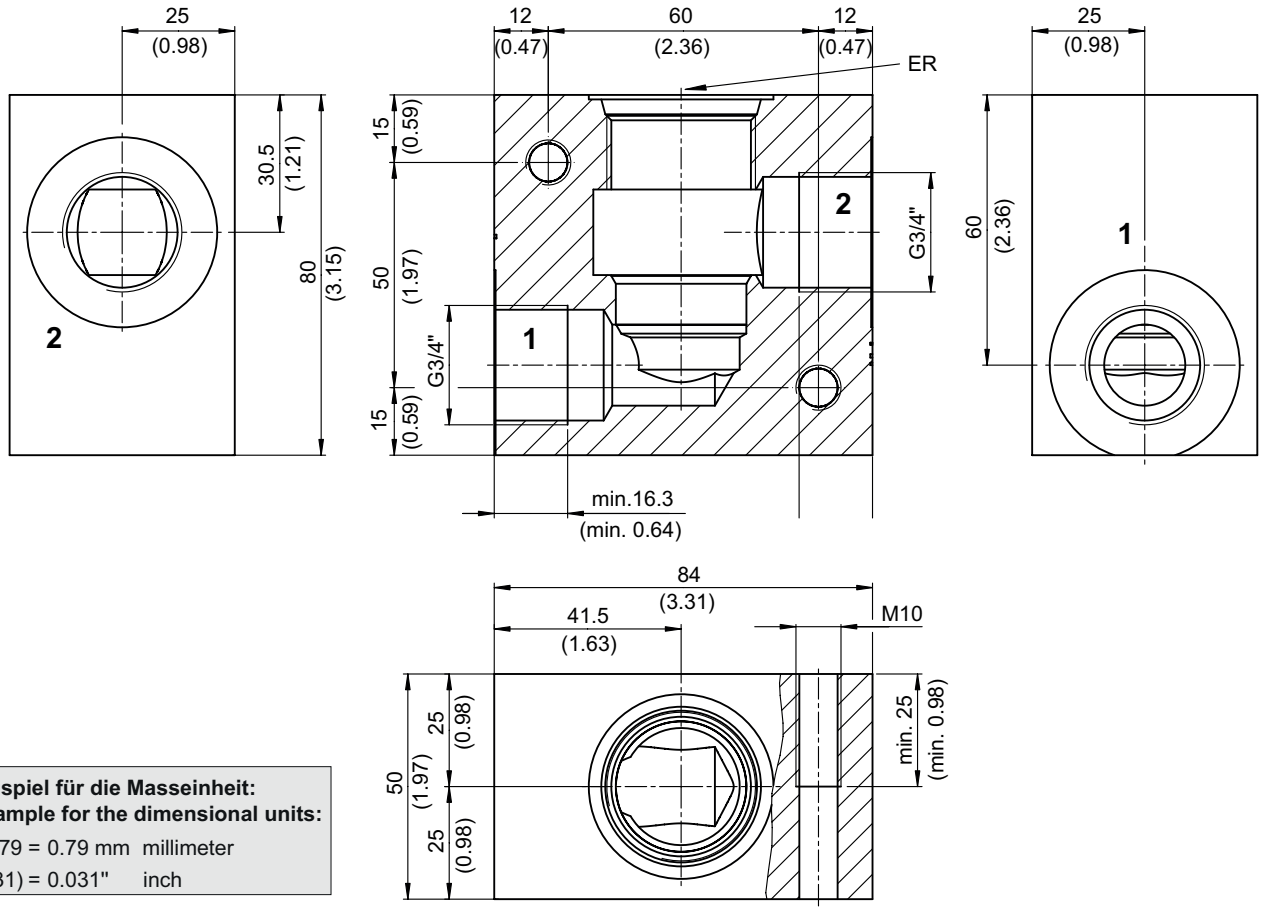

Beispiel für die Masseinheit:
Example for the dimensional units:

0.79 = 0.79 mm millimeter
(.031) = 0.031" inch

© 2021 by Bucher Hydraulics AG Frutigen, 3714 Frutigen, Switzerland

All rights reserved.
Data is provided for the purpose of product description only, and must not be construed as warranted characteristics in the legal sense. The information does not relieve users from the duty of conducting their own evaluations and tests. Because the products are subject to continual improvement, we reserve the right to amend the product specifications contained in this catalogue.

BUCHER hydraulics
WWW.SUMY.IR

General information
Cavity

Type series: HA/C1220

Dimensions and sectional view

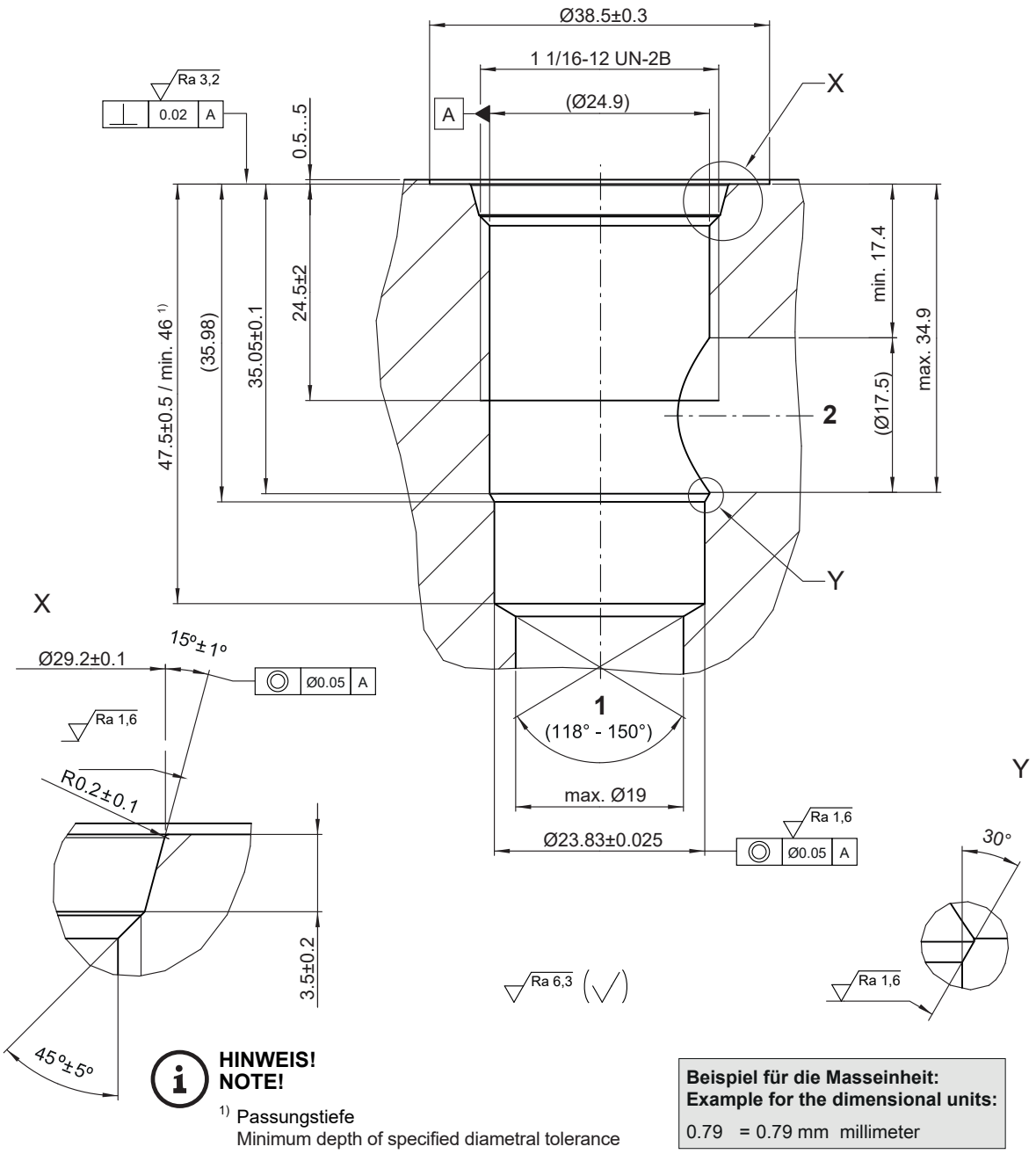

HINWEIS!
NOTE!

1) Passungstiefe
Minimum depth of specified diametral tolerance

Beispiel für die Masseinheit:
Example for the dimensional units:

0.79 = 0.79 mm millimeter

WWW.SUMY.IR

Installation information

ATTENTION!
You must maintain the specified positional and diametral tolerances. To ensure trouble-free operation of the screw-in cartridges, we strongly recommend that pilot drilling, boring, reaming and cavity thread-cutting are always performed in one setup.

NOTE!
Cavity type to factory standard.

NOTE!
We offer form tool sets for sale or hire. See data sheet 400-P-040011 for further information.

info.ch@bucherhydraulics.com **www.bucherhydraulics.com**

© 2025 by Bucher Hydraulics AG Frutigen, 3714 Frutigen, Switzerland

All rights reserved.
Data is provided for the purpose of product description only, and must not be construed as warranted characteristics in the legal sense. The information does not relieve users from the duty of conducting their own evaluations and tests. Because the products are subject to continual improvement, we reserve the right to amend the product specifications contained in this catalogue.

BUCHER hydraulics

WWW.SUMY.IR

Valve accessory
Threaded port body

Type series: GHA-34...

- For cavity HA/C1220
- All external parts with zinc-nickel plating according to DIN EN ISO 19598
- Functionless threaded port body
- Port sizes of the main connections G 3/4"
- Optimized Δp values
- Suitable for piping assembly
- Can be fixed with 2× cap screws

Technical data

General characteristics	Description, value, unit
Function group	Valve accessory
Function	Threaded port body
Maximum operating pressure	420 bar
Weight	2 kg
Cavity acc. factory standard	For cavity HA/C1220
Surface protection	All external parts with zinc-nickel plating according to DIN EN ISO 19598

Dimensions and sectional view

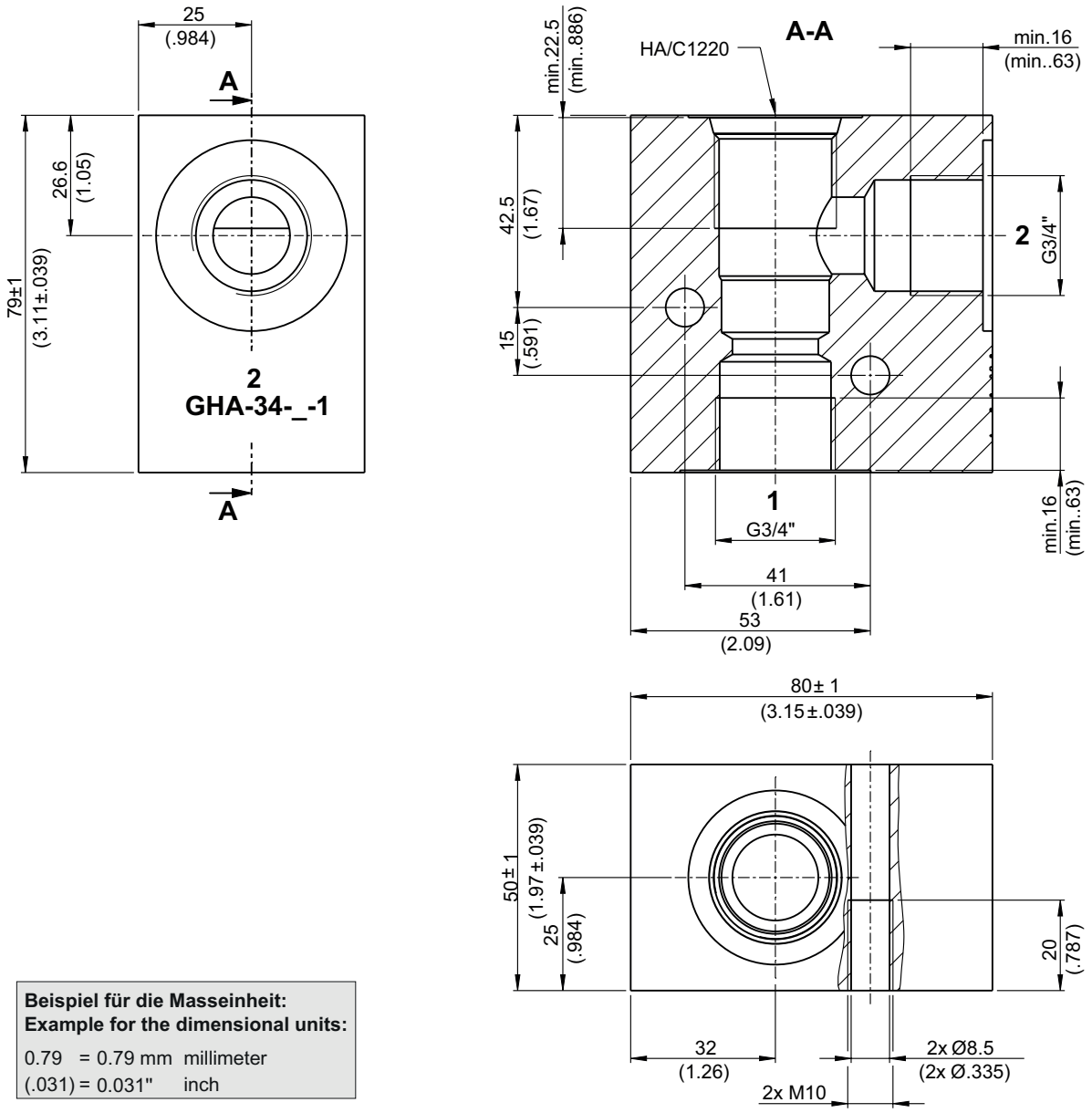

Beispiel für die Masseinheit:
Example for the dimensional units:

0.79 = 0.79 mm millimeter
(.031) = 0.031" inch

Ordering code

Ex. GHA - 34 - S - 1

GHA = threaded port body for cavity HA/C1220
34 = connection size of the main ports G 3/4"
S = material design steel *(standard)*
A = material design aluminium with limited performance data *(on request)*
1…9 = technical design no. (omit when ordering)

info.ch@bucherhydraulics.com **www.bucherhydraulics.com**

© 2022 by Bucher Hydraulics AG Frutigen, 3714 Frutigen, Switzerland

All rights reserved.
Data is provided for the purpose of product description only, and must not be construed as warranted characteristics in the legal sense. The information does not relieve users from the duty of conducting their own evaluations and tests. Because the products are subject to continual improvement, we reserve the right to amend the product specifications contained in this catalogue.

BUCHER hydraulics

WWW.SUMY.IR

Valve accessory
Threaded port body

Type series: GHF-34...

- For cavity HF/C1220A
- All external parts with zinc-nickel plating according to DIN EN ISO 19598
- Functionless threaded port body
- Port sizes of the main connections G 3/4"
- Optimized Δp values
- Suitable for piping assembly
- Can be fixed with 2× cap screws

Technical data

General characteristics	Description, value, unit
Function group	Valve accessory
Function	Threaded port body
Maximum operating pressure	420 bar
Weight	2 kg
Cavity acc. factory standard	For cavity HF/C1220A
Surface protection	All external parts with zinc-nickel plating according to DIN EN ISO 19598

Dimensions and sectional view

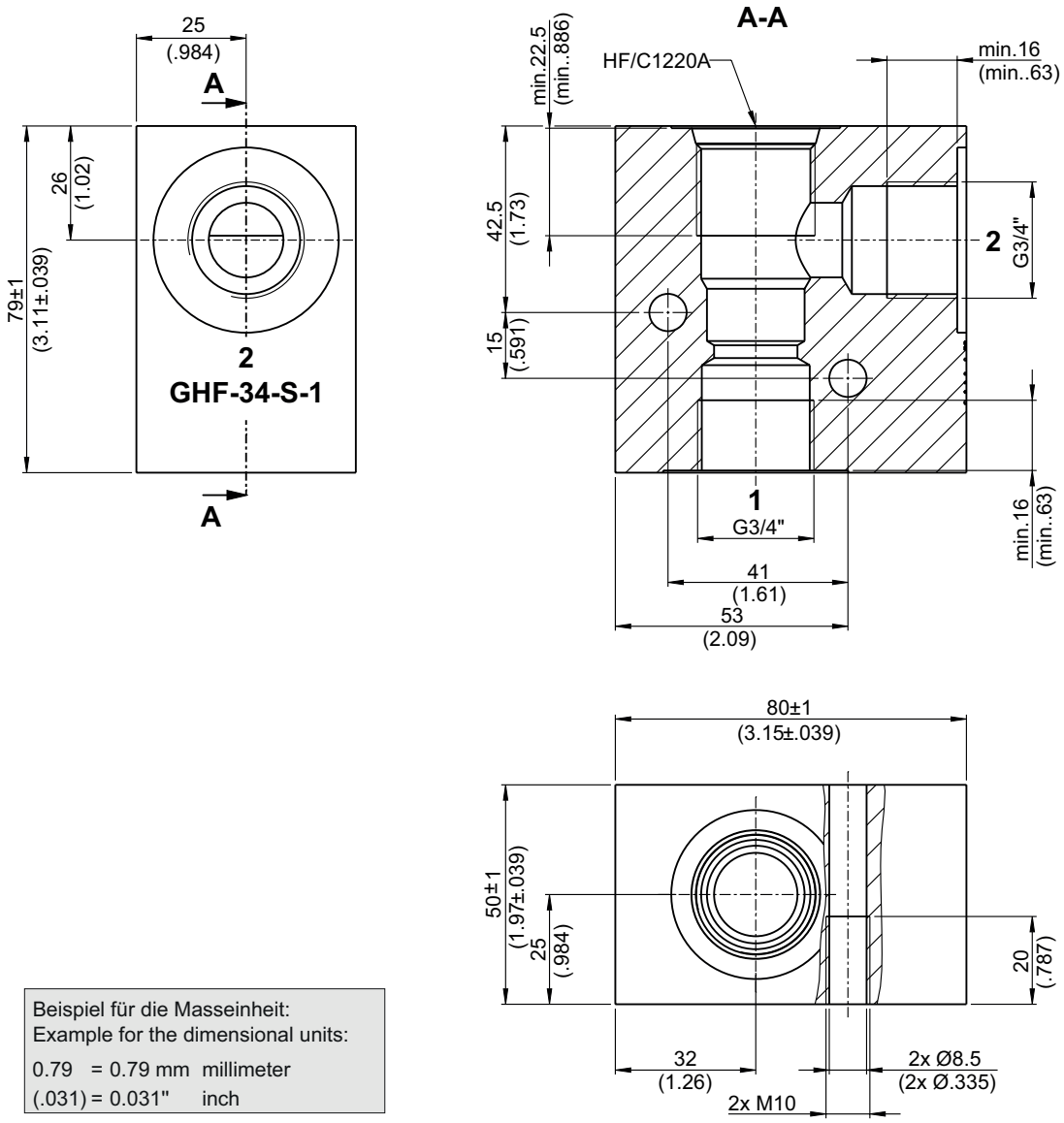

Beispiel für die Masseinheit:
Example for the dimensional units:

0.79 = 0.79 mm millimeter
(.031) = 0.031" inch

Ordering code

z. B. GHF - 34 - S - 1

GHF	= Gewindeanschlusskörper für Bohrungsform HF/C1220A
34	= Anschlussgrösse der Hauptanschlüsse G 3/4"
S	= Materialausführung Stahl *(Standard)*
A	= Materialausführung Aluminium mit eingeschränkten Leistungsdaten *(auf Anfrage)*
1…9	= Technischer Stand (bei Bestellung weglassen)

info.ch@bucherhydraulics.com **www.bucherhydraulics.com**

© 2022 by Bucher Hydraulics AG Frutigen, 3714 Frutigen, Switzerland

All rights reserved.
Data is provided for the purpose of product description only, and must not be construed as warranted characteristics in the legal sense. The information does not relieve users from the duty of conducting their own evaluations and tests. Because the products are subject to continual improvement, we reserve the right to amend the product specifications contained in this catalogue.

BUCHER hydraulics

WWW.SUMY.IR

Valve accessory
Threaded port body

Type series: GEFA

- For cavity EF
- All external parts with zinc-nickel coating according to DIN EN ISO 19598
- Functionless threaded port body
- Port sizes of the main connections G 1"
- Optimized Δp values
- Suitable for piping assembly
- Can be fixed with 2× cap screws

Technical data

General Characteristics	Description, value, unit
Function group	Valve accessory
Function	Threaded port body
Maximum operating pressure	350 bar
Weight	6 kg
Cavity acc. factory standard	For cavity EF
Surface protection	All external parts with zinc-nickel coating according to DIN EN ISO 19598

Dimensions and sectional view

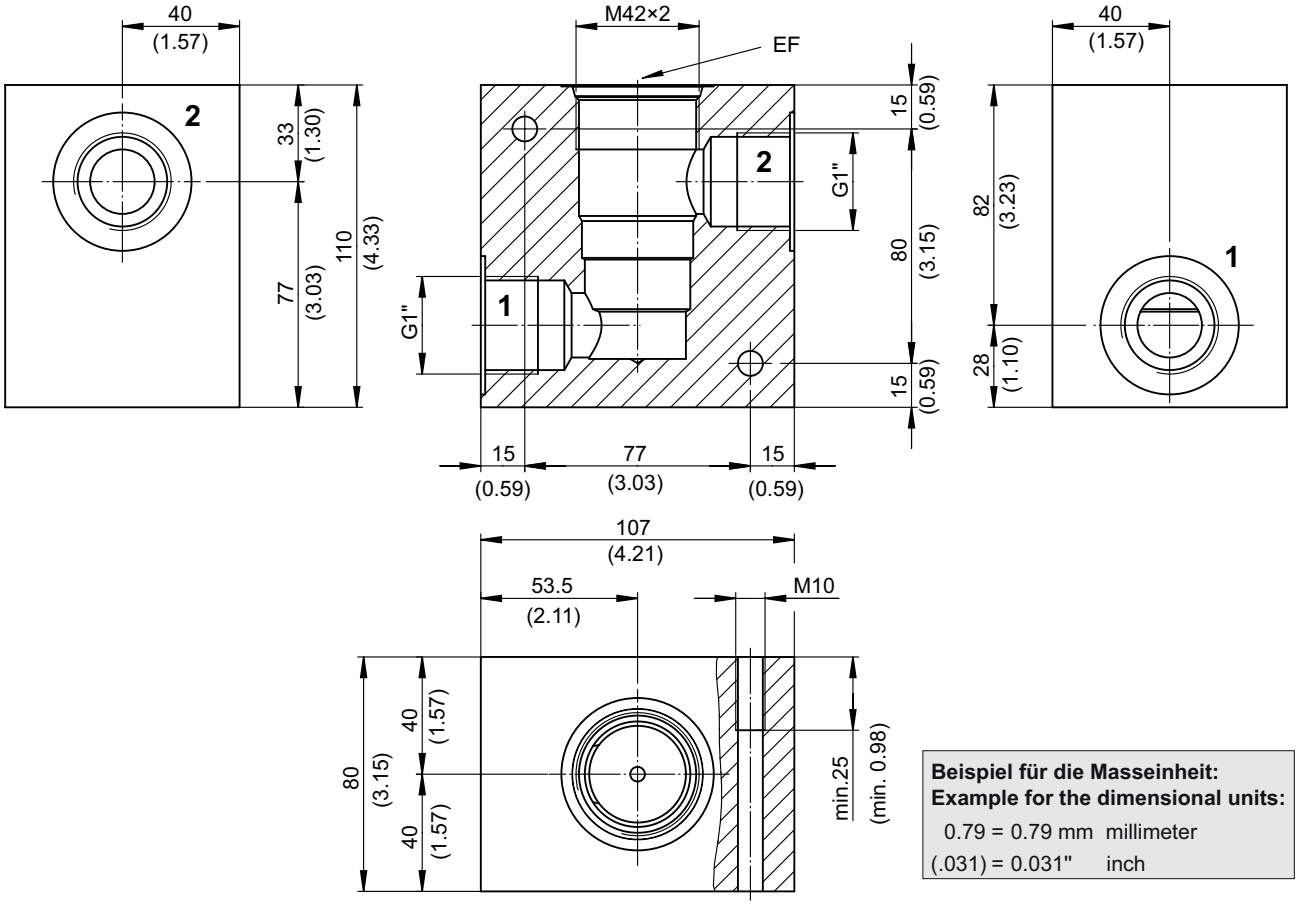

Beispiel für die Masseinheit:
Example for the dimensional units:

0.79 = 0.79 mm millimeter
(.031) = 0.031" inch

info.ch@bucherhydraulics.com **www.bucherhydraulics.com**

© 2021 by Bucher Hydraulics AG Frutigen, 3714 Frutigen, Switzerland

All rights reserved.
Data is provided for the purpose of product description only, and must not be construed as warranted characteristics in the legal sense. The information does not relieve users from the duty of conducting their own evaluations and tests. Because the products are subject to continual improvement, we reserve the right to amend the product specifications contained in this catalogue.

BUCHER hydraulics

WWW.SUMY.IR

Valve accessory
Threaded port body

Type series: GLA-11...

- For cavity LA/C1620
- All external parts with zinc-nickel plating according to DIN EN ISO 19598
- Functionless threaded port body
- Port sizes of the main connections G 1"
- Optimized Δp values
- Suitable for piping assembly
- Can be fixed with 2× cap screws

Technical data

General characteristics	Description, value, unit
Function group	Valve accessory
Function	Threaded port body
Maximum operating pressure	420 bar
Weight	2.74 kg
Cavity acc. factory standard	For cavity LA/C1620
Surface protection	All external parts with zinc-nickel plating according to DIN EN ISO 19598

Dimensions and sectional view

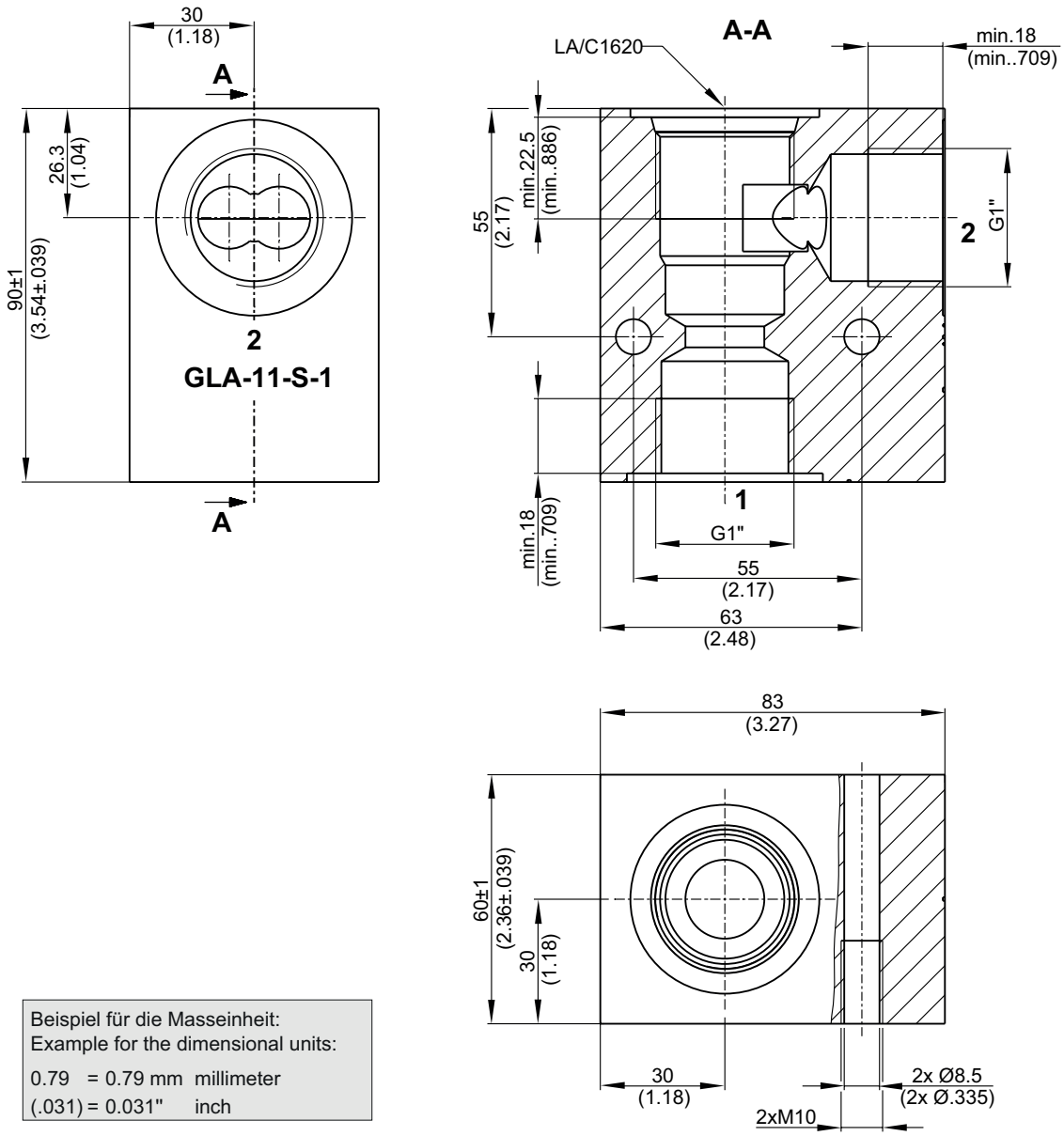

Beispiel für die Masseinheit:
Example for the dimensional units:

0.79 = 0.79 mm millimeter
(.031) = 0.031" inch

Ordering code

Ex. GLA - 11 - S - 1

GLA = threaded port body for cavity LA/C1620
11 = connection size of the main ports G 1"
S = material design steel *(standard)*
A = material design aluminium with limited performance data *(on request)*
1…9 = technical design no. (omit when ordering)

info.ch@bucherhydraulics.com **www.bucherhydraulics.com**

© 2022 by Bucher Hydraulics AG Frutigen, 3714 Frutigen, Switzerland

All rights reserved.
Data is provided for the purpose of product description only, and must not be construed as warranted characteristics in the legal sense. The information does not relieve users from the duty of conducting their own evaluations and tests. Because the products are subject to continual improvement, we reserve the right to amend the product specifications contained in this catalogue.

BUCHER hydraulics
WWW.SUMY.IR

General information
Cavity

Type series: DU

Dimensions and sectional view

Beispiel für die Masseinheit:
Example for the dimensional units:
0.79 = 0.79 mm millimeter

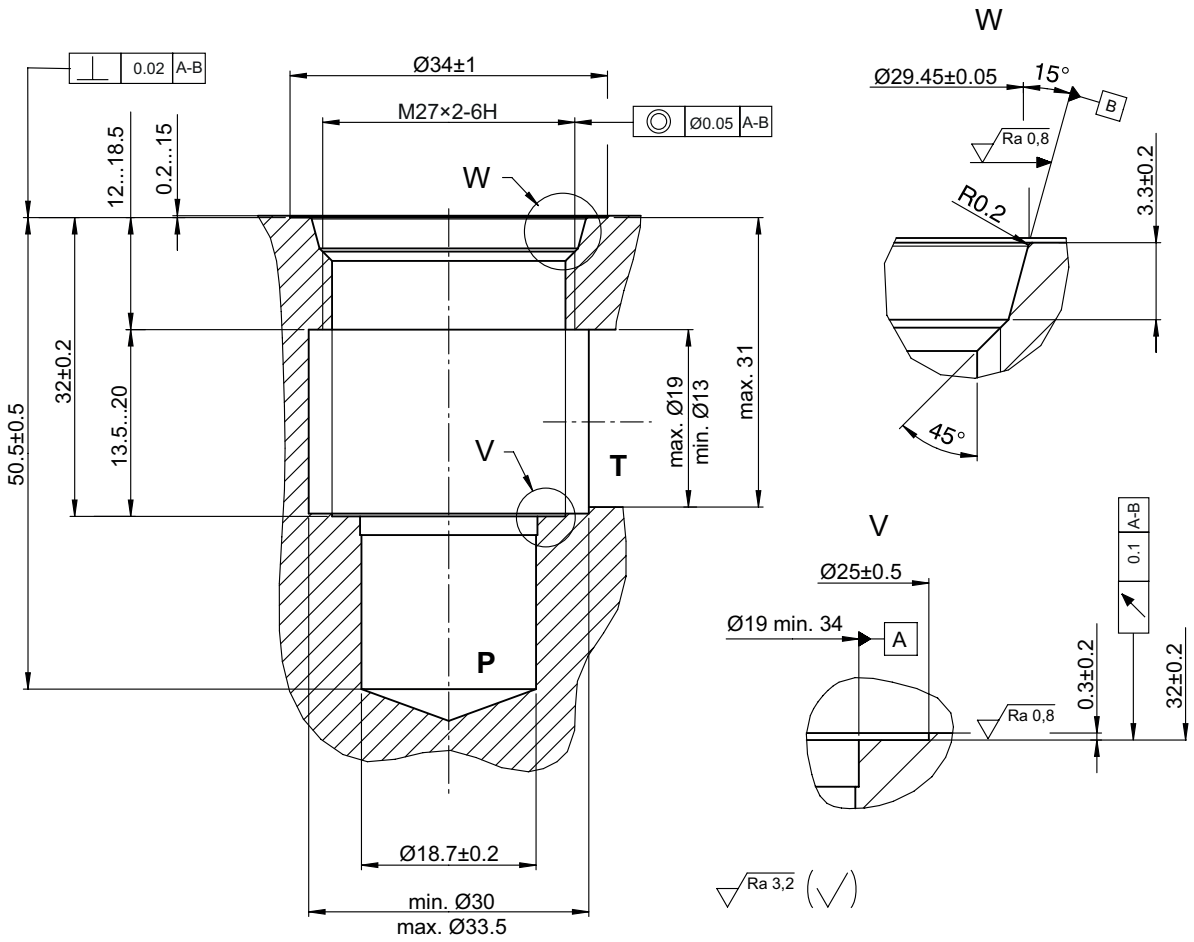

Installation information

ATTENTION!
You must maintain the specified positional and diametral tolerances. To ensure trouble-free operation of the screw-in cartridges, we strongly recommend that pilot drilling, boring, reaming and cavity thread-cutting are always performed in one setup.

NOTE!
We offer form tool sets for sale or hire. For further information, see data sheet 400-P-040011.

NOTE!
Cavity type to factory standard.

info.ch@bucherhydraulics.com **www.bucherhydraulics.com**

© 2023 by Bucher Hydraulics AG Frutigen, 3714 Frutigen, Switzerland

All rights reserved.
Data is provided for the purpose of product description only, and must not be construed as warranted characteristics in the legal sense. The information does not relieve users from the duty of conducting their own evaluations and tests. Because the products are subject to continual improvement, we reserve the right to amend the product specifications contained in this catalogue.

BUCHER
hydraulics
WWW.SUMY.IR

Valve accessory
Threaded port body

Type series: GCUA

- For cavity DU
- Functionless threaded port body
- Port sizes of the main connections G 3/4"
- Optimized Δp values
- Suitable for piping assembly
- Can be fixed with 2x cap screws

Technical data

General Characteristics	Description, value, unit
Function group	Valve accessory
Function	Threaded port body
Maximum operating pressure	210 bar
Weight	0.65 kg
Cavity acc. factory standard	For cavity DU
Material	Aluminum

Dimensions and sectional view

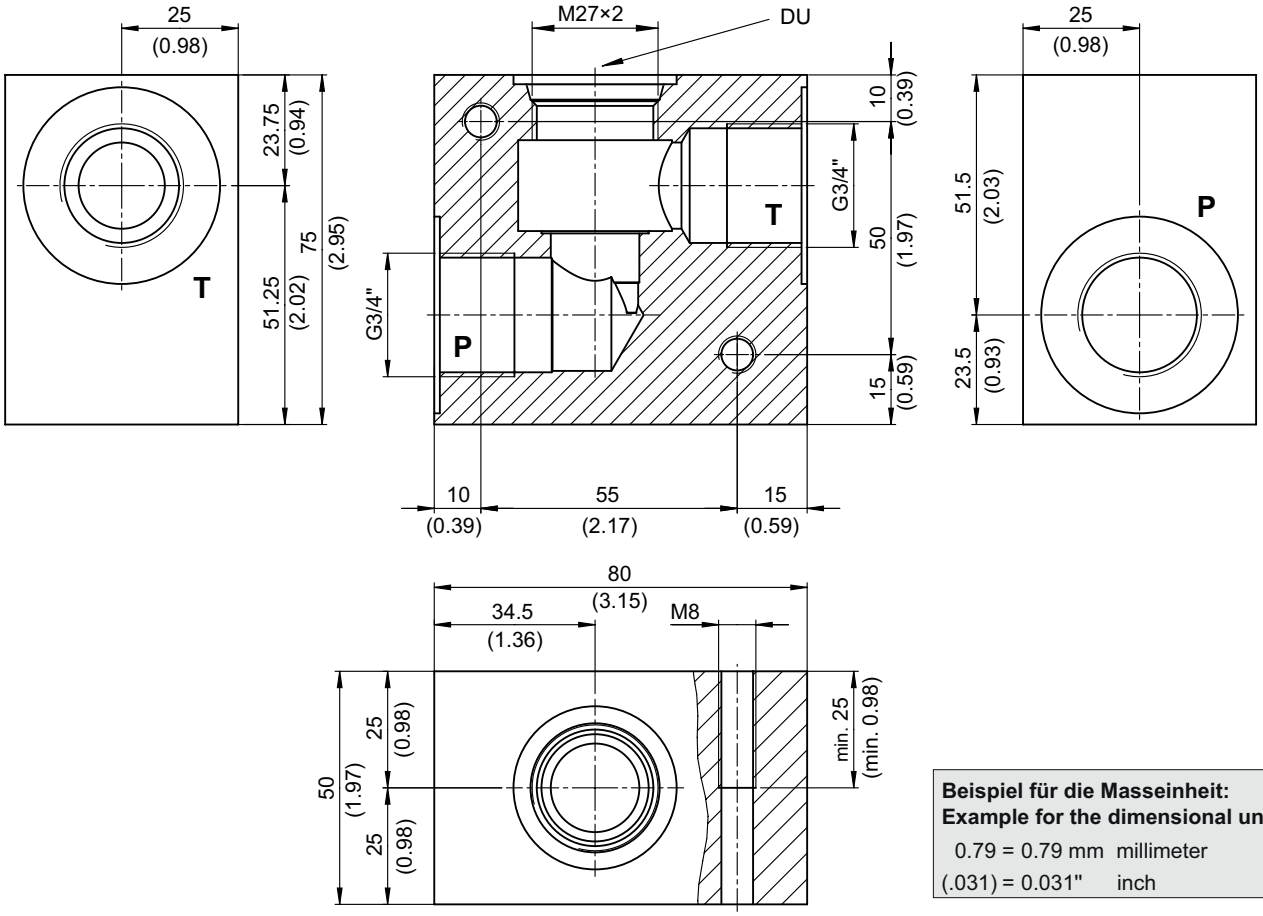

Beispiel für die Masseinheit:
Example for the dimensional units:

0.79 = 0.79 mm millimeter
(.031) = 0.031" inch

info.ch@bucherhydraulics.com **www.bucherhydraulics.com**

© 2021 by Bucher Hydraulics AG Frutigen, 3714 Frutigen, Switzerland

All rights reserved.
Data is provided for the purpose of product description only, and must not be construed as warranted characteristics in the legal sense. The information does not relieve users from the duty of conducting their own evaluations and tests. Because the products are subject to continual improvement, we reserve the right to amend the product specifications contained in this catalogue.

WWW.SUMY.IR

General information
Cavity

Type series: KTU

Dimensions and sectional view

Beispiel für die Masseinheit:
Example for the dimensional units:

0.79 = 0.79 mm millimeter

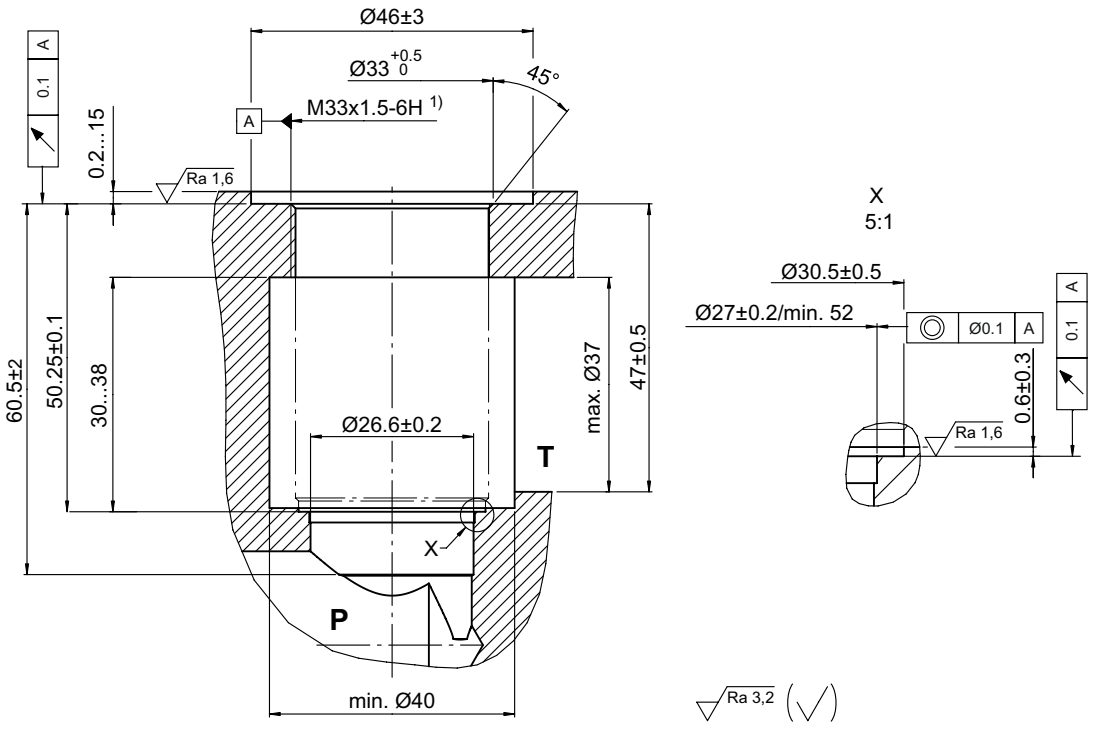

HINWEIS!
NOTE!

1) Gewindetiefe min. 20
threade depth min. 20

Installation information

ATTENTION!
You must maintain the specified positional and diametral tolerances. To ensure trouble-free operation of the screw-in cartridges, we strongly recommend that pilot drilling, boring, reaming and cavity thread-cutting are always performed in one setup.

NOTE!
We offer form tool sets for sale or hire. For further information, see data sheet 400-P-040011.

NOTE!
Cavity type to factory standard.

info.ch@bucherhydraulics.com **www.bucherhydraulics.com**

© 2023 by Bucher Hydraulics AG Frutigen, 3714 Frutigen, Switzerland

All rights reserved.
Data is provided for the purpose of product description only, and must not be construed as warranted characteristics in the legal sense. The information does not relieve users from the duty of conducting their own evaluations and tests. Because the products are subject to continual improvement, we reserve the right to amend the product specifications contained in this catalogue.

BUCHER hydraulics

WWW.SUMY.IR

Valve accessory
Threaded port body

Type series: GEUA

- For cavity KTU
- Functionless threaded port body
- Port sizes of the main connections G 1"
- Optimized Δp values
- Suitable for piping assembly
- Can be fixed with 2x cap screws

Technical data

General Characteristics	Description, value, unit
Function group	Valve accessory
Function	Threaded port body
Maximum operating pressure	210 bar
Weight	0.95 kg
Cavity acc. factory standard	For cavity KTU
Material	Aluminum

Dimensions and sectional view

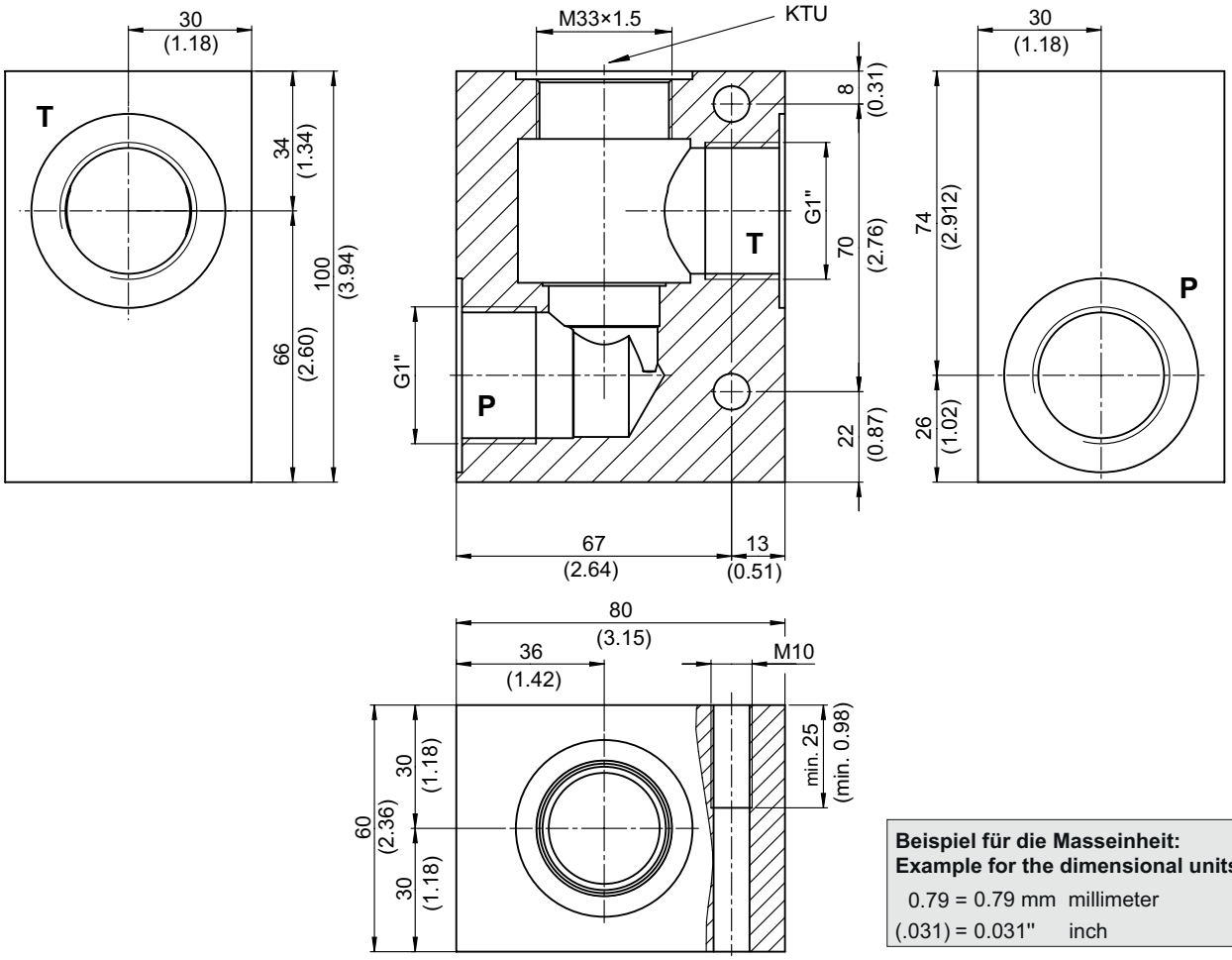

Beispiel für die Masseinheit:
Example for the dimensional units:

0.79 = 0.79 mm millimeter
(.031) = 0.031" inch

info.ch@bucherhydraulics.com **www.bucherhydraulics.com**

© 2021 by Bucher Hydraulics AG Frutigen, 3714 Frutigen, Switzerland

All rights reserved.
Data is provided for the purpose of product description only, and must not be construed as warranted characteristics in the legal sense. The information does not relieve users from the duty of conducting their own evaluations and tests. Because the products are subject to continual improvement, we reserve the right to amend the product specifications contained in this catalogue.

BUCHER hydraulics

WWW.SUMY.IR

Valve accessory
Threaded port body

Type series: GAAA

- For cavity AG and AGA
- All external parts with zinc-nickel coating according to DIN EN ISO 19598
- Functionless threaded port body
- Port sizes of the main connections G 1/4"
- Optimized Δp values
- Suitable for piping assembly
- Can be fixed with 2x cap screws

Technical data

General Characteristics	Description, value, unit
Function group	Valve accessory
Function	Threaded port body
Maximum operating pressure	210 bar
Weight	0.9 kg
Cavity acc. factory standard	For cavity AG and AGA
Surface protection	All external parts with zinc-nickel coating according to DIN EN ISO 19598

Dimensions and sectional view

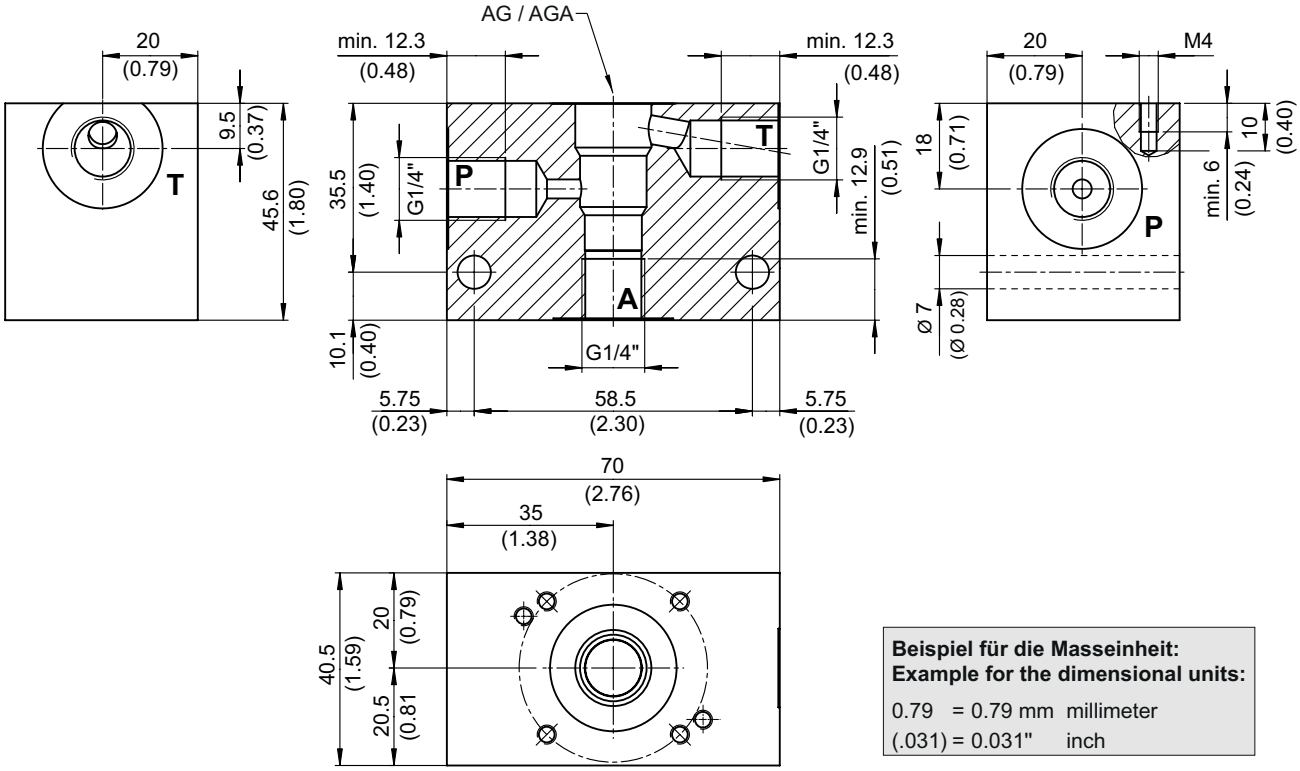

Beispiel für die Masseinheit:
Example for the dimensional units:

0.79 = 0.79 mm millimeter
(.031) = 0.031" inch

info.ch@bucherhydraulics.com **www.bucherhydraulics.com**

© 2021 by Bucher Hydraulics AG Frutigen, 3714 Frutigen, Switzerland

All rights reserved.
Data is provided for the purpose of product description only, and must not be construed as warranted characteristics in the legal sense. The information does not relieve users from the duty of conducting their own evaluations and tests. Because the products are subject to continual improvement, we reserve the right to amend the product specifications contained in this catalogue.

BUCHER hydraulics

WWW.SUMY.IR

Valve accessory
Threaded port body

Type series: GAAZ

- For cavity AGS
- All external parts with zinc-nickel coating according to DIN EN ISO 19598
- Functionless threaded port body
- Port sizes of the main connections G 1/4"
- Optimized Δp values
- Suitable for piping assembly
- Can be fixed with 2x cap screws

Technical data

General Characteristics	Description, value, unit
Function group	Valve accessory
Function	Threaded port body
Maximum operating pressure	210 bar
Weight	0.9 kg
Cavity acc. factory standard	For cavity AGS
Surface protection	All external parts with zinc-nickel coating according to DIN EN ISO 19598

Dimensions and sectional view

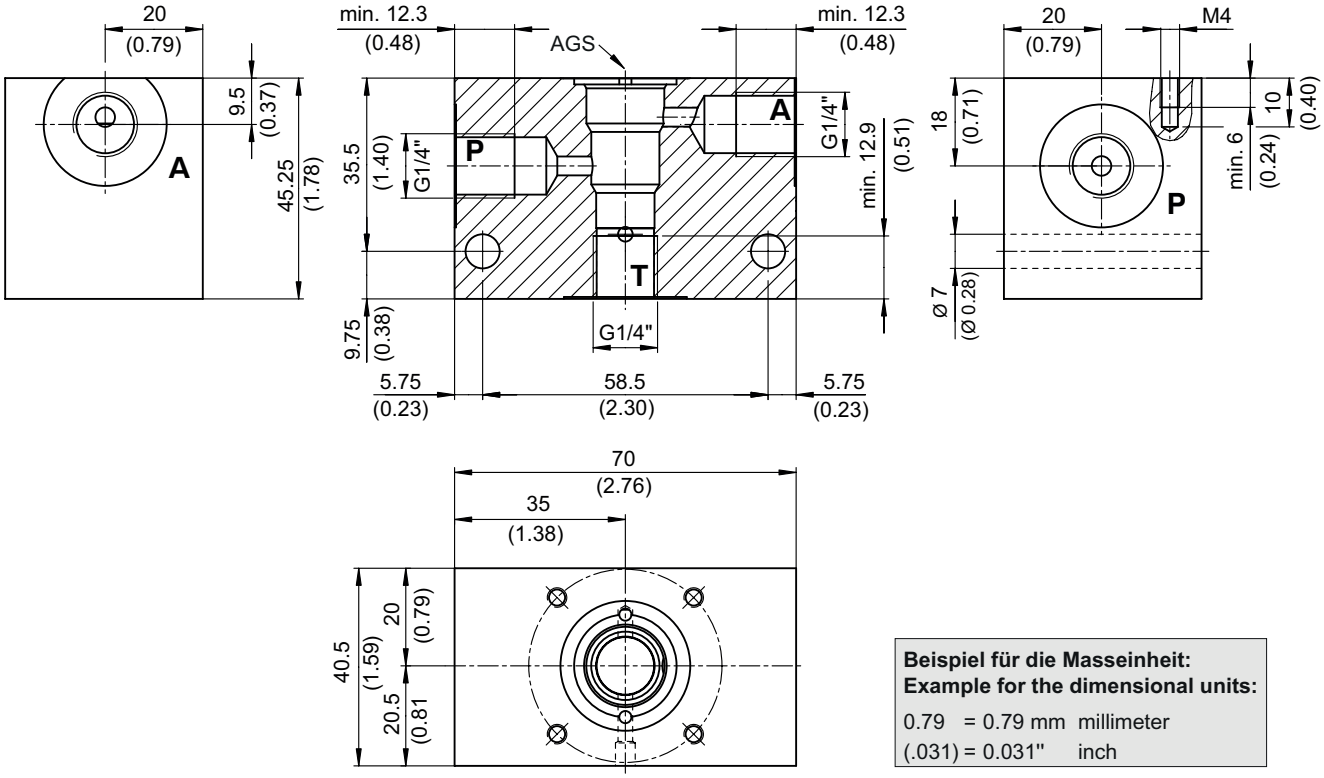

Beispiel für die Masseinheit:
Example for the dimensional units:

0.79 = 0.79 mm millimeter
(.031) = 0.031" inch

© 2021 by Bucher Hydraulics AG Frutigen, 3714 Frutigen, Switzerland

All rights reserved.
Data is provided for the purpose of product description only, and must not be construed as warranted characteristics in the legal sense. The information does not relieve users from the duty of conducting their own evaluations and tests. Because the products are subject to continual improvement, we reserve the right to amend the product specifications contained in this catalogue.

BUCHER hydraulics

WWW.SUMY.IR

Valve accessory
Threaded port body

Type series: RC-12

- For cavity RC
- All external parts with zinc-nickel coating according to DIN EN ISO 19598
- Functionless threaded port body
- Port sizes of the main connections G 1/2"
- Optimized Δp values
- Suitable for piping assembly
- Can be fixed with 2x cap screws

Technical data

General Characteristics	Description, value, unit
Function group	Valve accessory
Function	Threaded port body
Maximum operating pressure	350 bar
Weight	2.20 kg
Cavity acc. factory standard	For cavity RC
Surface protection	All external parts with zinc-nickel coating according to DIN EN ISO 19598

Dimensions and sectional view

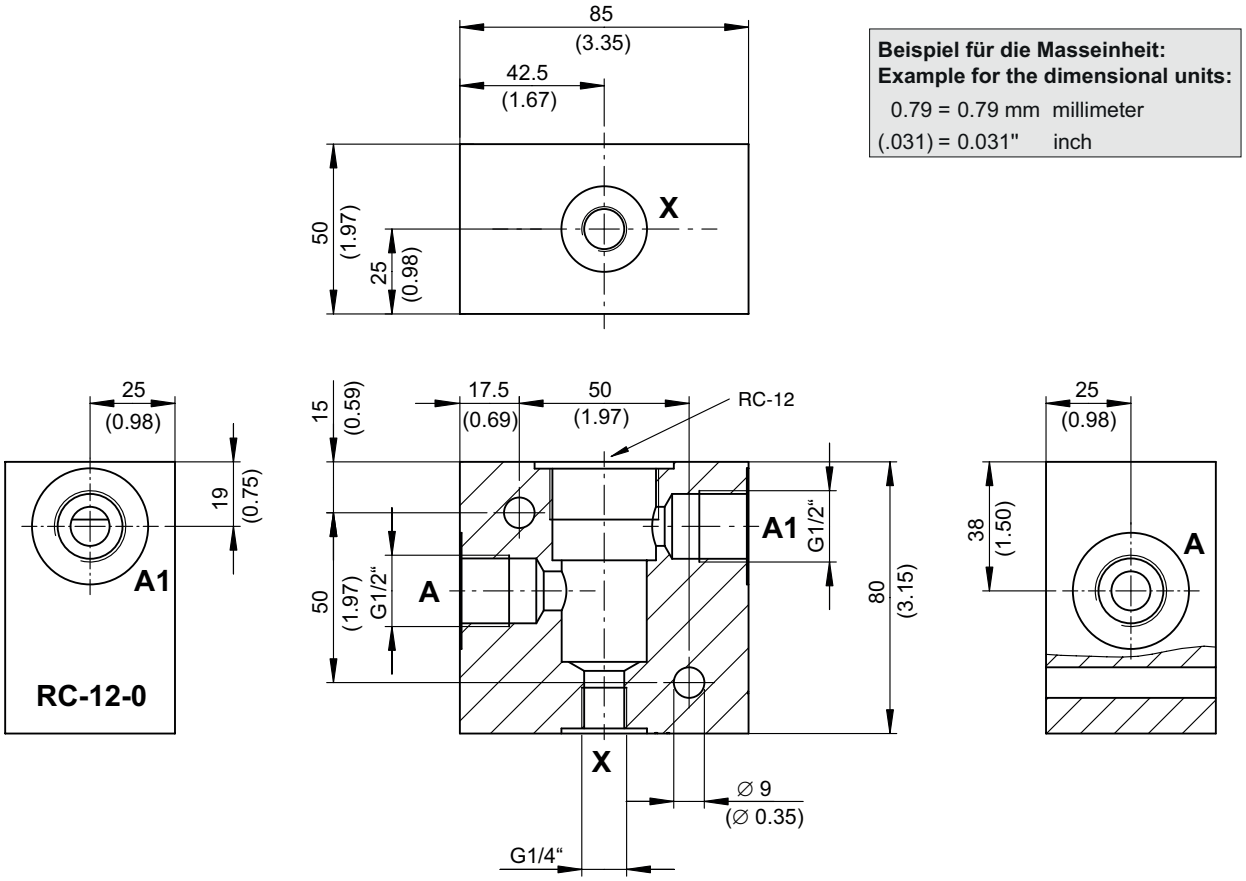

© 2021 by Bucher Hydraulics AG Frutigen, 3714 Frutigen, Switzerland

All rights reserved.
Data is provided for the purpose of product description only, and must not be construed as warranted characteristics in the legal sense. The information does not relieve users from the duty of conducting their own evaluations and tests. Because the products are subject to continual improvement, we reserve the right to amend the product specifications contained in this catalogue.

BUCHER hydraulics
WWW.SUMY.IR

General information
Cavity

Type series: ECY

Dimensions and sectional view

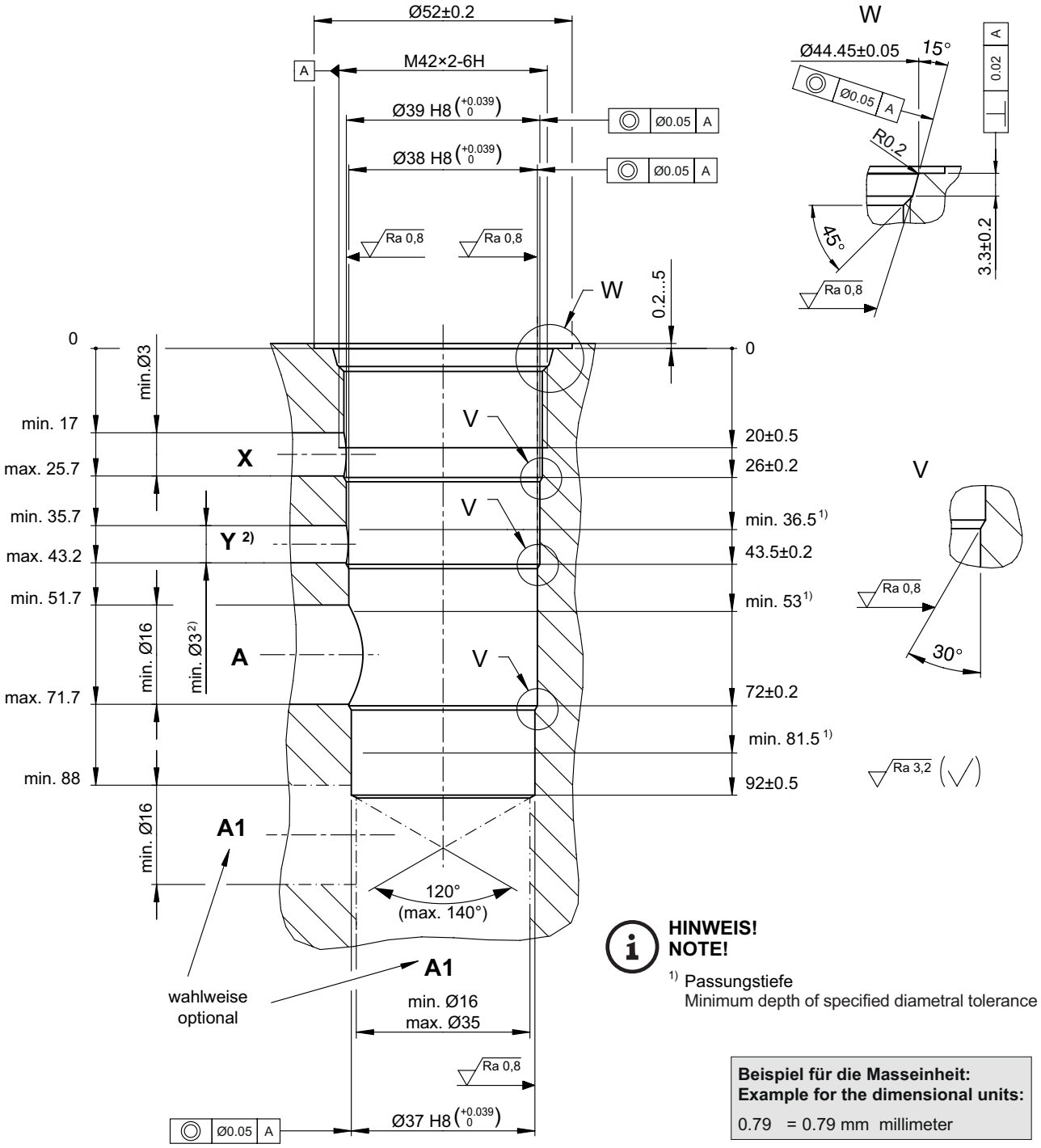

HINWEIS!
NOTE!

1) Passungstiefe
Minimum depth of specified diametral tolerance

Beispiel für die Masseinheit:
Example for the dimensional units:

0.79 = 0.79 mm millimeter

Installation information

ATTENTION!
You must maintain the specified positional and diametral tolerances. To ensure trouble-free operation of the screw-in cartridges, we strongly recommend that pilot drilling, boring, reaming and cavity thread-cutting are always performed in one setup.

NOTE!
We offer form tool sets for sale or hire. For further information, see data sheet 400-P-040011.

NOTE!
Cavity type to factory standard.

info.ch@bucherhydraulics.com **www.bucherhydraulics.com**

© 2023 by Bucher Hydraulics AG Frutigen, 3714 Frutigen, Switzerland

All rights reserved.
Data is provided for the purpose of product description only, and must not be construed as warranted characteristics in the legal sense. The information does not relieve users from the duty of conducting their own evaluations and tests. Because the products are subject to continual improvement, we reserve the right to amend the product specifications contained in this catalogue.

BUCHER hydraulics

WWW.SUMY.IR

Valve accessory
Threaded port body

Type series: GEAA

- For cavity ECY
- All external parts with zinc-nickel coating according to DIN EN ISO 19598
- Functionless threaded port body
- Port sizes of the main connections G 1"
- Optimized Δp values
- Suitable for piping assembly
- Can be fixed with 2x cap screws

Technical data

General Characteristics	Description, value, unit
Function group	Valve accessory
Function	Threaded port body
Maximum operating pressure	350 bar
Weight	4.45 kg
Cavity acc. factory standard	For cavity ECY
Surface protection	All external parts with zinc-nickel coating according to DIN EN ISO 19598

Dimensions and sectional view

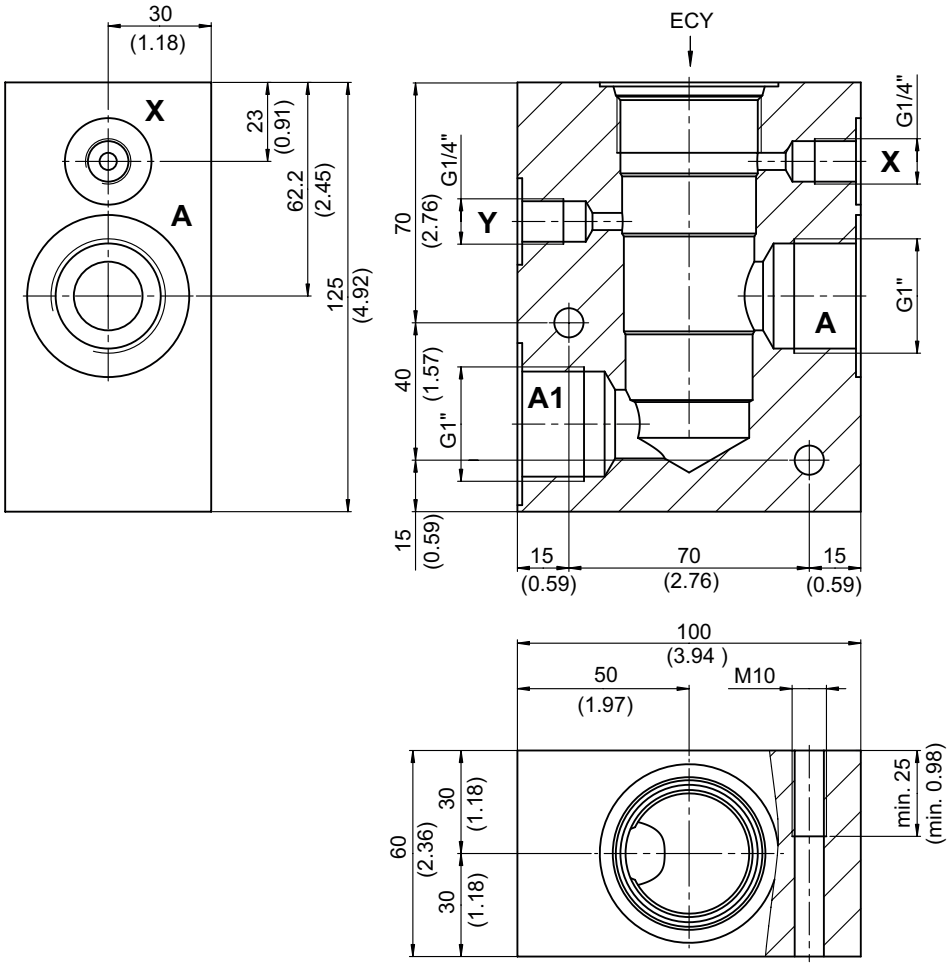

Beispiel für die Masseinheit:
Example for the dimensional units:

0.79 = 0.79 mm millimeter
(.031) = 0.031" inch

Installation information

ATTENTION!
When a type REPNB-16-... pilot-operated cartridge check valve is inserted, the Y port must be plugged with a G 1/4“ threaded plug.

© 2021 by Bucher Hydraulics AG Frutigen, 3714 Frutigen, Switzerland

All rights reserved.
Data is provided for the purpose of product description only, and must not be construed as warranted characteristics in the legal sense. The information does not relieve users from the duty of conducting their own evaluations and tests. Because the products are subject to continual improvement, we reserve the right to amend the product specifications contained in this catalogue.

BUCHER hydraulics
WWW.SUMY.IR

Valve accessory
Threaded port body

Type series: DD-12

- For cavity DD
- All external parts with zinc-nickel plating according to DIN EN ISO 19598
- Line mounting and manifold mounting possible

Technical data

General characteristics	Description, value, unit
Function group	Valve accessory
Function	Threaded port body
Maximum operating pressure	450 bar
Restriction of operating pressure	Manifold mounting: 250 bar
Weight	2.0 kg
Cavity acc. factory standard	For cavity DD
Surface protection	All external parts with zinc-nickel plating according to DIN EN ISO 19598

Dimensions and sectional view

Beispiel für die Masseinheit:
Exampel for the dimensional units:

0.79	= 0.79 mm	millimeter
(.031)	= 0.031"	inch

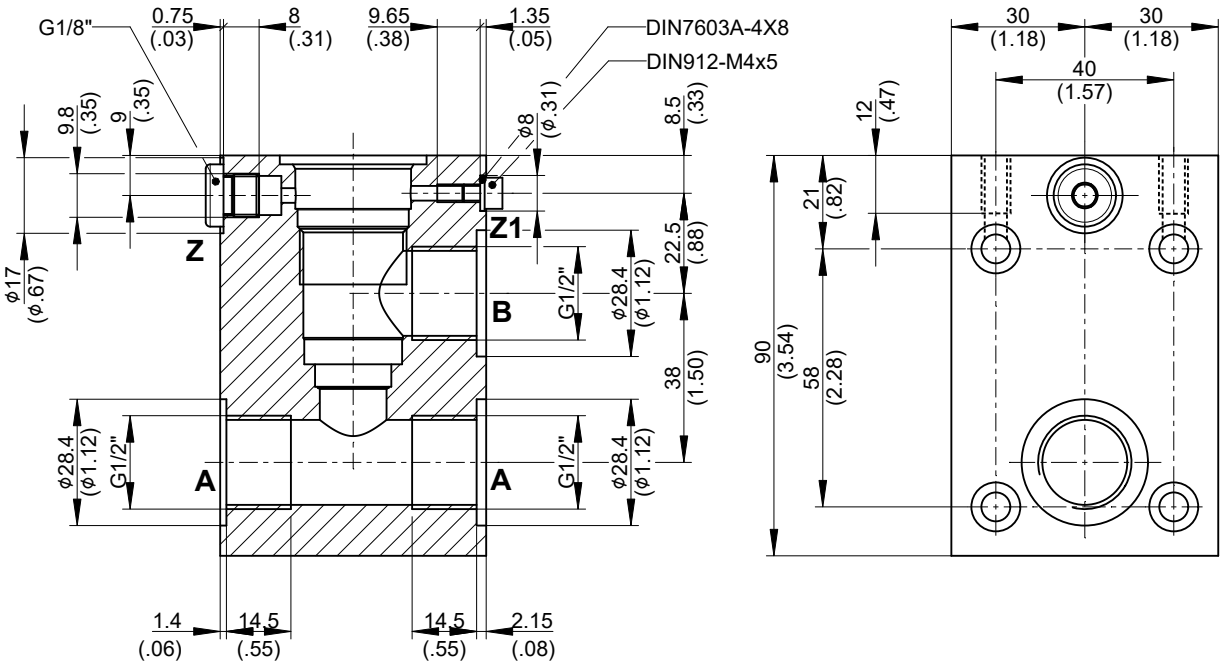

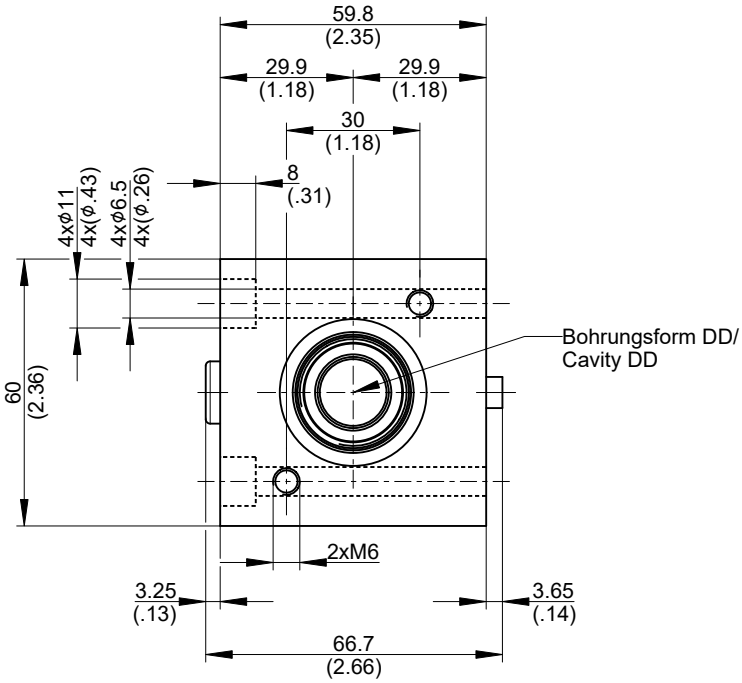

Mounting options

For manifold mounting, the maximum operating pressure is 250 bar. Use M6 cap screws, grade 12.9, to mount the valve. Plug port Z (G 1/8") and the unused port A (G 1/2") with threaded plugs. Remove the M4 screw from port Z1 and insert an O-ring Ø4.47×1.78. For higher pressures, contact BUCHER.

Beispiel für die Masseinheit: **Exampel for the dimensional units:**		
0.79	= 0.79 mm	millimeter
(.031)	= 0.031"	inch

Rohrleitungsmontage/
Line mounting

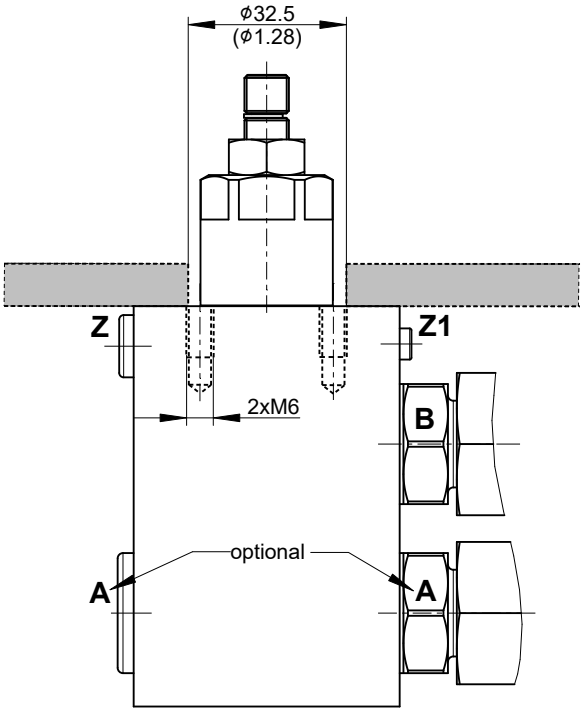

Flanschmontage/
Manifold mounting

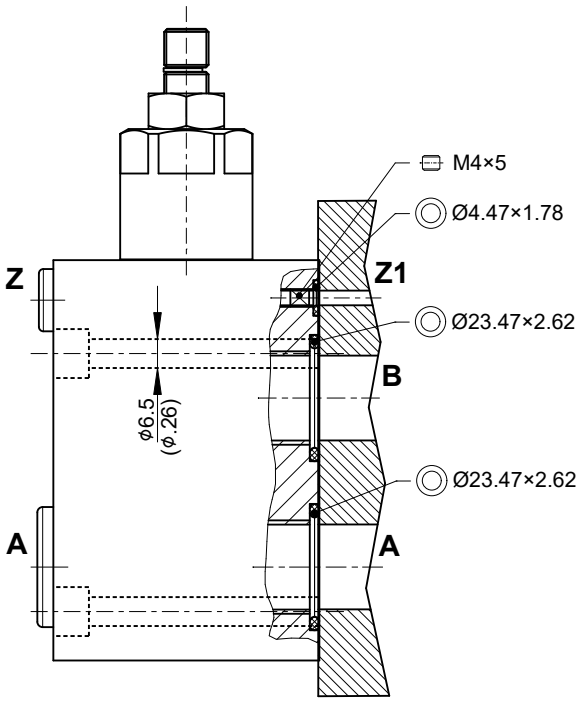

Related data sheets

Reference	Description
400-P-060121	Cavity DD

info.ch@bucherhydraulics.com **www.bucherhydraulics.com**

© 2025 by Bucher Hydraulics AG Frutigen, 3714 Frutigen, Switzerland

All rights reserved.
Data is provided for the purpose of product description only, and must not be construed as warranted characteristics in the legal sense. The information does not relieve users from the duty of conducting their own evaluations and tests. Because the products are subject to continual improvement, we reserve the right to amend the product specifications contained in this catalogue.

BUCHER hydraulics
WWW.SUMY.IR

Valve accessory
Threaded port body

Type series: DDY-12

- For cavity DD
- All external parts with zinc-nickel plating according to DIN EN ISO 19598
- Line mounting and manifold mounting possible

Technical data

General characteristics	Description, value, unit
Function group	Valve accessory
Function	Threaded port body
Maximum operating pressure	450 bar
Restriction of operating pressure	Manifold mounting: 250 bar
Weight	2.0 kg
Cavity acc. factory standard	For cavity DD
Surface protection	All external parts with zinc-nickel plating according to DIN EN ISO 19598

Dimensions and sectional view

Beispiel für die Masseinheit:
Exampel for the dimensional units:

0.79	= 0.79 mm	millimeter
(.031)	= 0.031"	inch

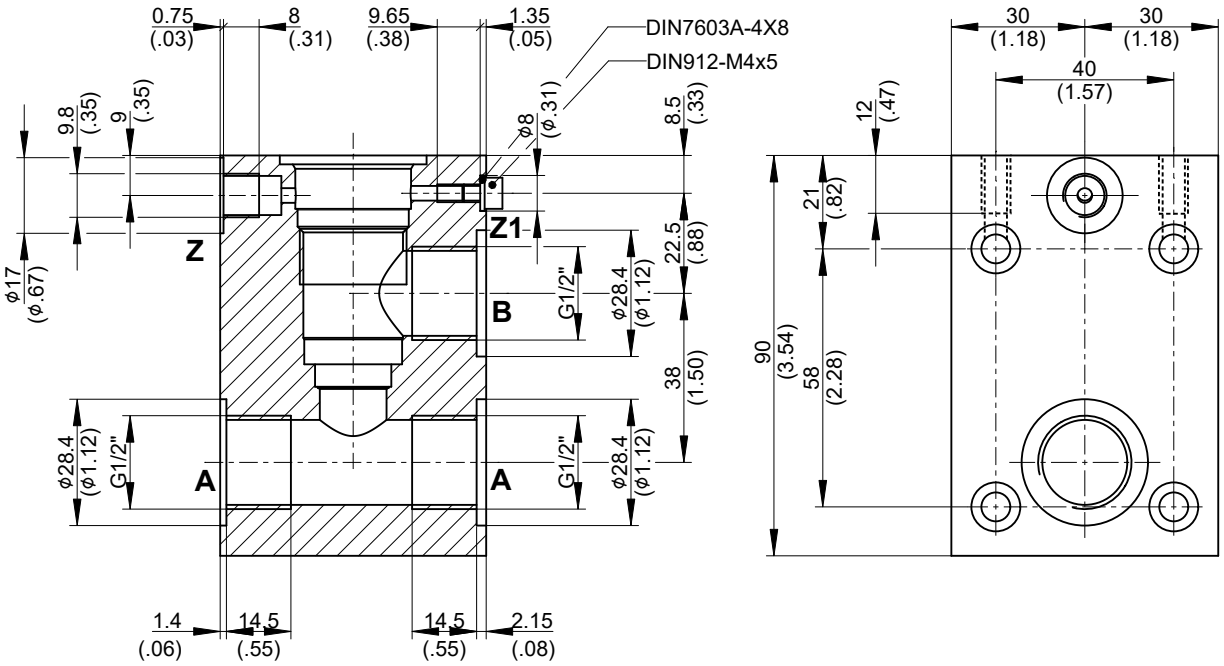

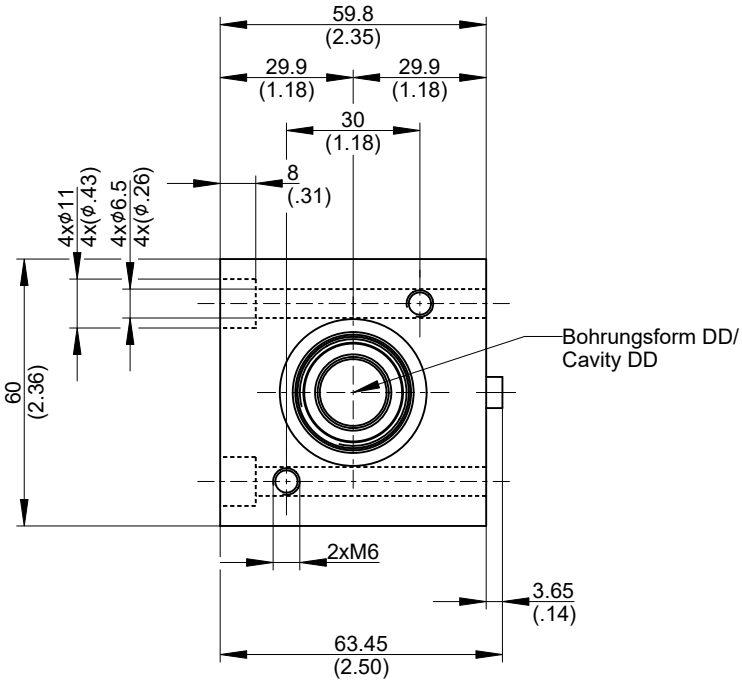

Mounting options

For manifold mounting, the maximum operating pressure is 250 bar. Use M6 cap screws, grade 12.9, to mount the valve. Plug port Z (G 1/8") and the unused port A (G 1/2") with threaded plugs. Remove the M4 screw from port Z1 and insert an O-ring Ø4.47×1.78. For higher pressures, contact BUCHER.

Beispiel für die Masseinheit:
Exampel for the dimensional units:

0.79	= 0.79 mm	millimeter
(.031)	= 0.031"	inch

Rohrleitungsmontage/
Line mounting

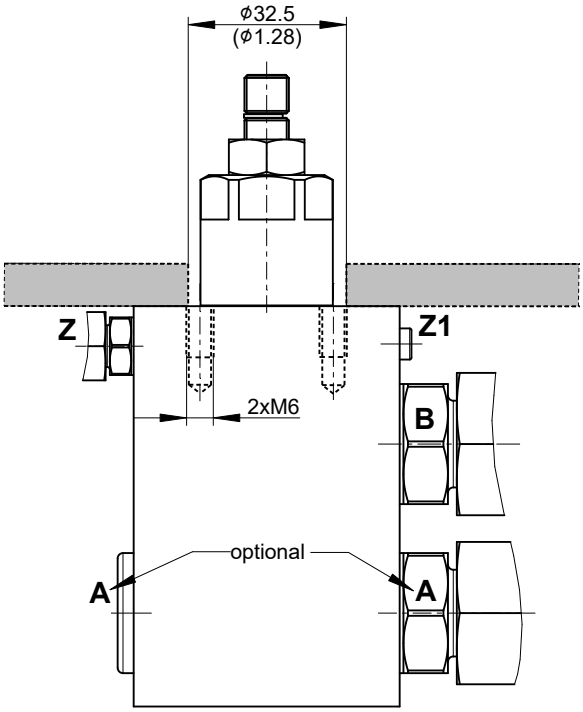

Flanschmontage/
Manifold mounting

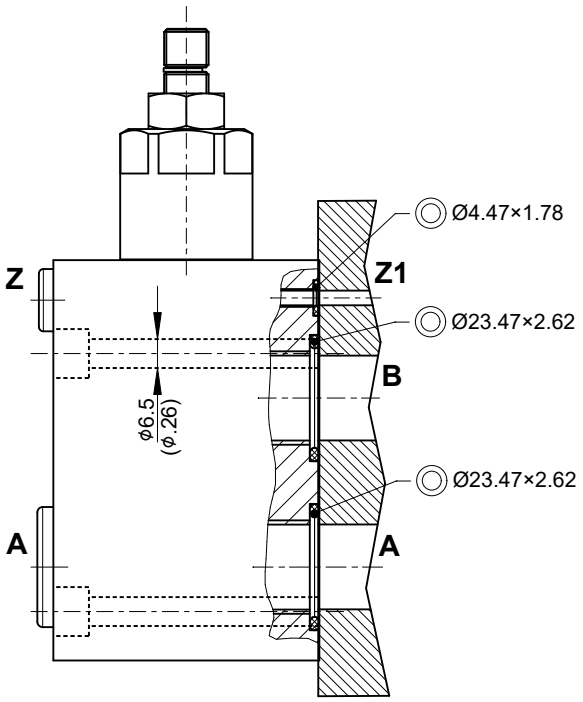

Related data sheets

Reference	Description
400-P-060121	Cavity DD

info.ch@bucherhydraulics.com **www.bucherhydraulics.com**

© 2025 by Bucher Hydraulics AG Frutigen, 3714 Frutigen, Switzerland

All rights reserved.
Data is provided for the purpose of product description only, and must not be construed as warranted characteristics in the legal sense. The information does not relieve users from the duty of conducting their own evaluations and tests. Because the products are subject to continual improvement, we reserve the right to amend the product specifications contained in this catalogue.

BUCHER hydraulics

WWW.SUMY.IR

Valve accessory
Threaded port body

Type series: GADA

- For cavity AD
- All external parts with zinc-nickel coating according to DIN EN ISO 19598
- Functionless threaded port body
- Port sizes of the main connections G 3/8"
- Optimized Δp values
- Suitable for piping assembly
- Can be fixed with 2x cap screws

Technical data

General Characteristics	Description, value, unit
Function group	Valve accessory
Function	Threaded port body
Maximum operating pressure	315 bar
Weight	1.1 kg
Cavity acc. factory standard	For cavity AD
Surface protection	All external parts with zinc-nickel coating according to DIN EN ISO 19598

Dimensions and sectional view

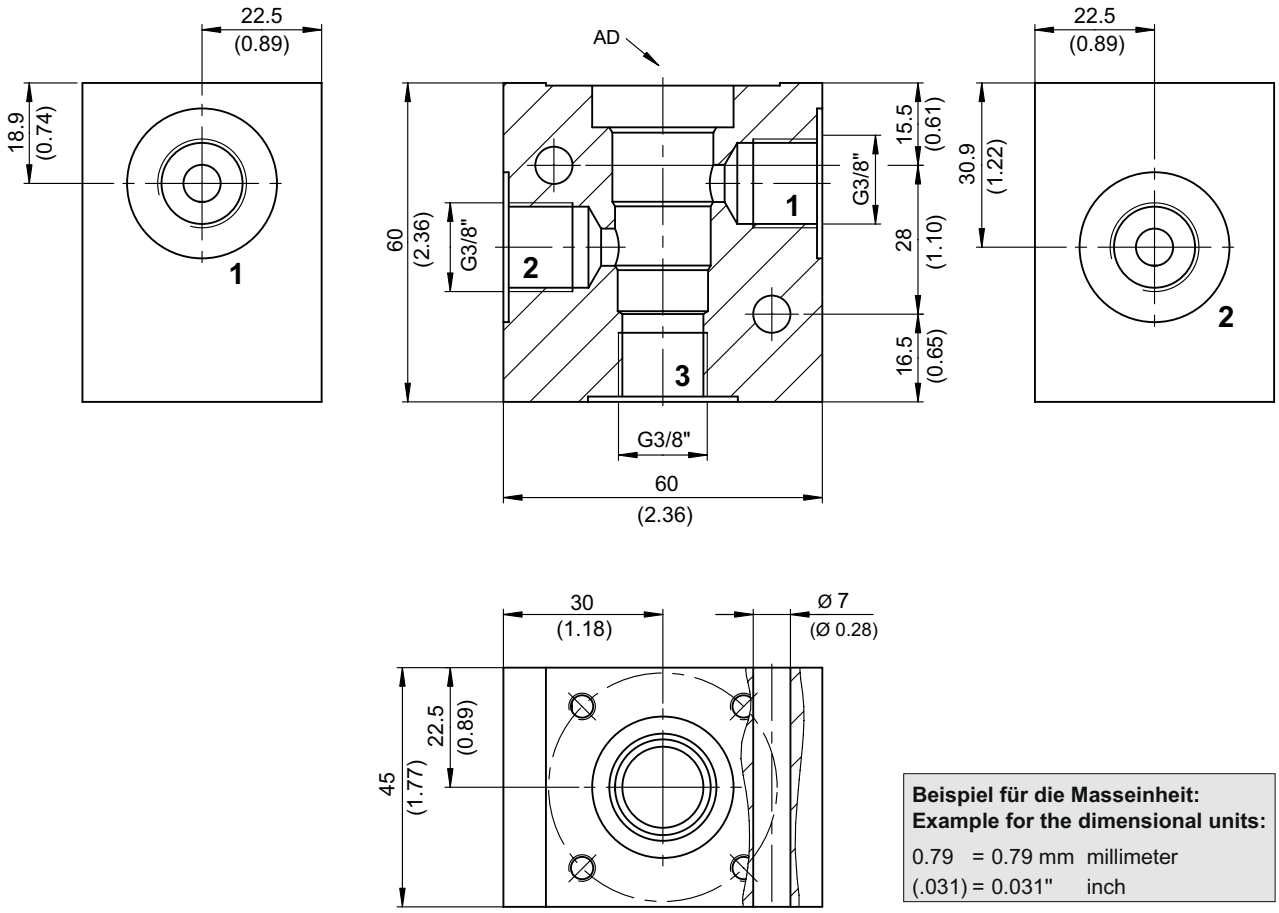

Beispiel für die Masseinheit:
Example for the dimensional units:

0.79 = 0.79 mm millimeter
(.031) = 0.031" inch

info.ch@bucherhydraulics.com **www.bucherhydraulics.com**

© 2021 by Bucher Hydraulics AG Frutigen, 3714 Frutigen, Switzerland

All rights reserved.
Data is provided for the purpose of product description only, and must not be construed as warranted characteristics in the legal sense. The information does not relieve users from the duty of conducting their own evaluations and tests. Because the products are subject to continual improvement, we reserve the right to amend the product specifications contained in this catalogue.

BUCHER hydraulics

WWW.SUMY.IR

Valve accessory
Threaded port body

Type series: GCLA

- For cavity DL
- All external parts with zinc-nickel coating according to DIN EN ISO 19598
- Functionless threaded port body
- Port sizes of the main connections G 3/4"
- Optimized Δp values
- Suitable for piping assembly
- Can be fixed with 2x cap screws

Technical data

General Characteristics	Description, value, unit
Function group	Valve accessory
Function	Threaded port body
Maximum operating pressure	315 bar
Weight	3.5 kg
Cavity acc. factory standard	For cavity DL
Surface protection	All external parts with zinc-nickel coating according to DIN EN ISO 19598

Dimensions and sectional view

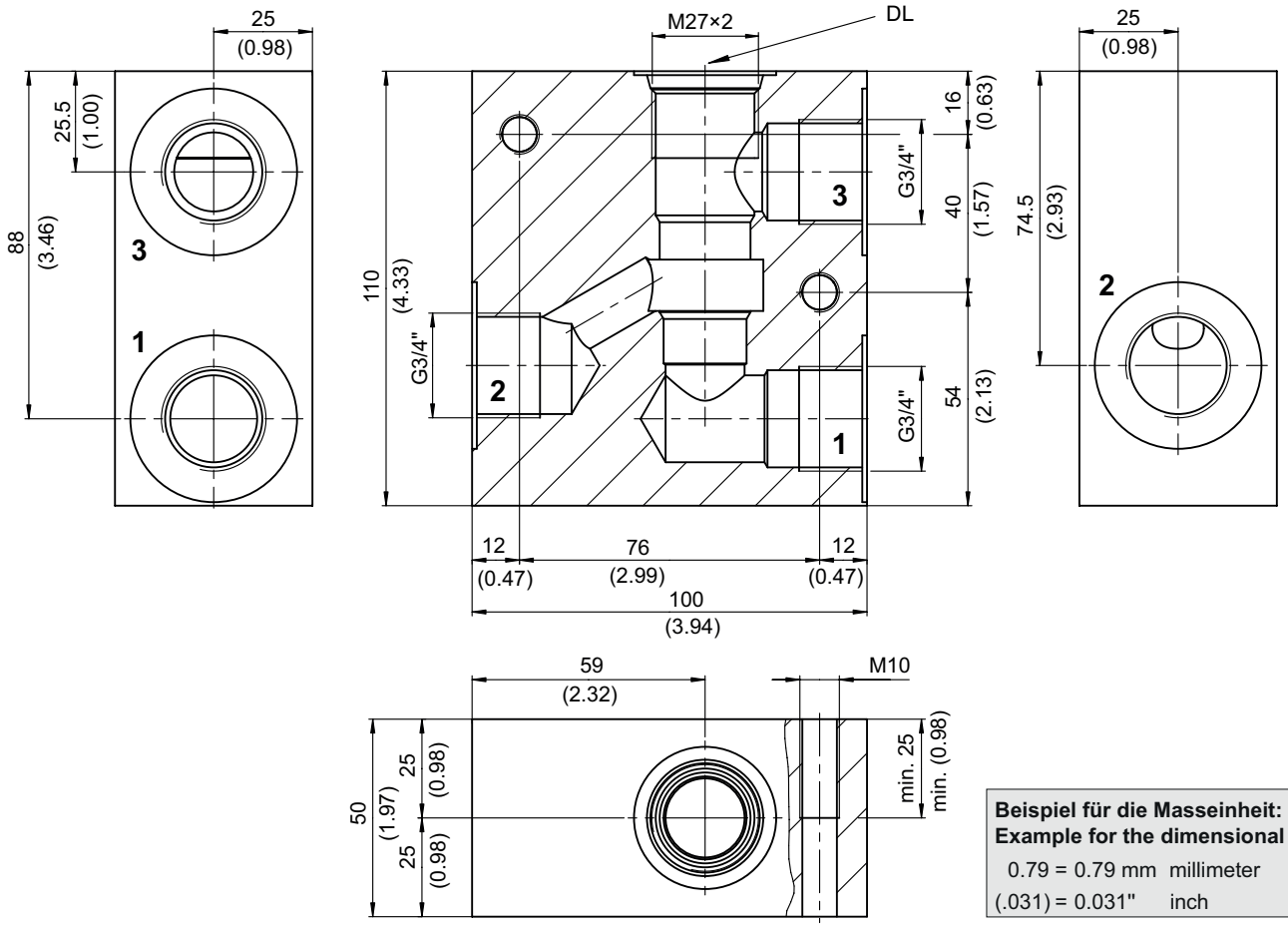

Beispiel für die Masseinheit:
Example for the dimensional units:

0.79 = 0.79 mm millimeter
(.031) = 0.031" inch

info.ch@bucherhydraulics.com **www.bucherhydraulics.com**

© 2021 by Bucher Hydraulics AG Frutigen, 3714 Frutigen, Switzerland

All rights reserved.
Data is provided for the purpose of product description only, and must not be construed as warranted characteristics in the legal sense. The information does not relieve users from the duty of conducting their own evaluations and tests. Because the products are subject to continual improvement, we reserve the right to amend the product specifications contained in this catalogue.

BUCHER hydraulics

WWW.SUMY.IR

Valve accessory
Threaded port body

Type series: GCLAA

- For cavity DL
- All external parts with zinc-nickel coating according to DIN EN ISO 19598
- Port sizes of the main connections G 3/4"
- Optimized Δp values
- Suitable for piping assembly
- Can be fixed with 2x cap screws
- With built-in check valve

Technical data

General Characteristics	Description, value, unit
Function group	Valve accessory
Function	Threaded port body
Maximum operating pressure	315 bar
Weight	3.5 kg
Cavity acc. factory standard	For cavity DL
Surface protection	All external parts with zinc-nickel coating according to DIN EN ISO 19598

Dimensions and sectional view

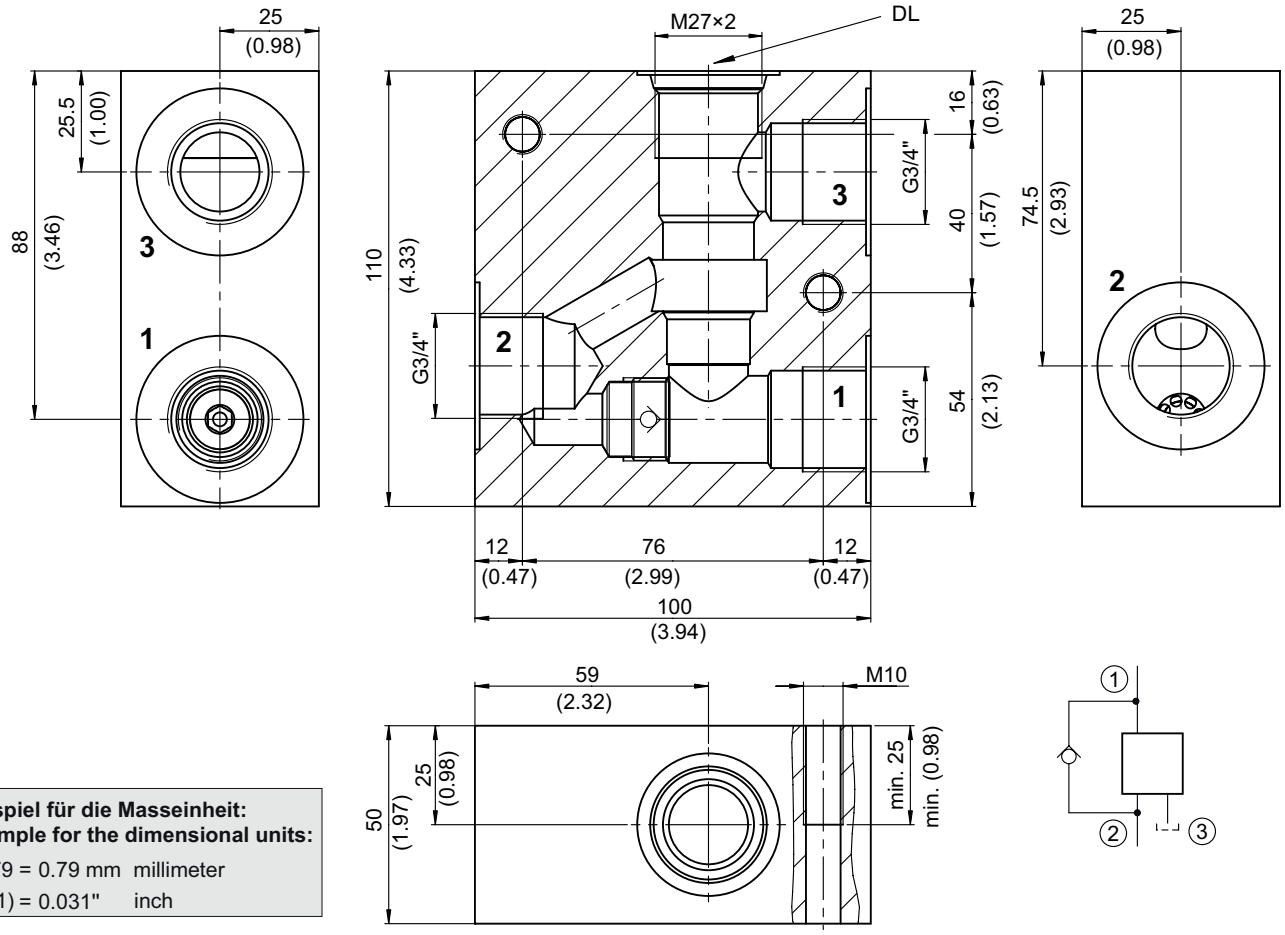

Beispiel für die Masseinheit:
Example for the dimensional units:

0.79 = 0.79 mm millimeter
(.031) = 0.031" inch

info.ch@bucherhydraulics.com **www.bucherhydraulics.com**

© 2021 by Bucher Hydraulics AG Frutigen, 3714 Frutigen, Switzerland

All rights reserved.
Data is provided for the purpose of product description only, and must not be construed as warranted characteristics in the legal sense. The information does not relieve users from the duty of conducting their own evaluations and tests. Because the products are subject to continual improvement, we reserve the right to amend the product specifications contained in this catalogue.

BUCHER hydraulics

WWW.SUMY.IR

Valve accessory
Threaded port body

Type series: GAMA

- For cavity AM
- All external parts with zinc-nickel plating according to DIN EN ISO 19598
- Functionless threaded port body
- Port sizes of the main connections G 3/8"
- Optimized Δp values
- Suitable for piping assembly
- Can be fixed with 2× cap screws

Technical data

General characteristics	Description, value, unit
Function group	Valve accessory
Function	Threaded port body
Maximum operating pressure	420 bar
Weight	0.85 kg
Cavity acc. factory standard	For cavity AM
Surface protection	All external parts with zinc-nickel plating according to DIN EN ISO 19598

Dimensions and sectional view

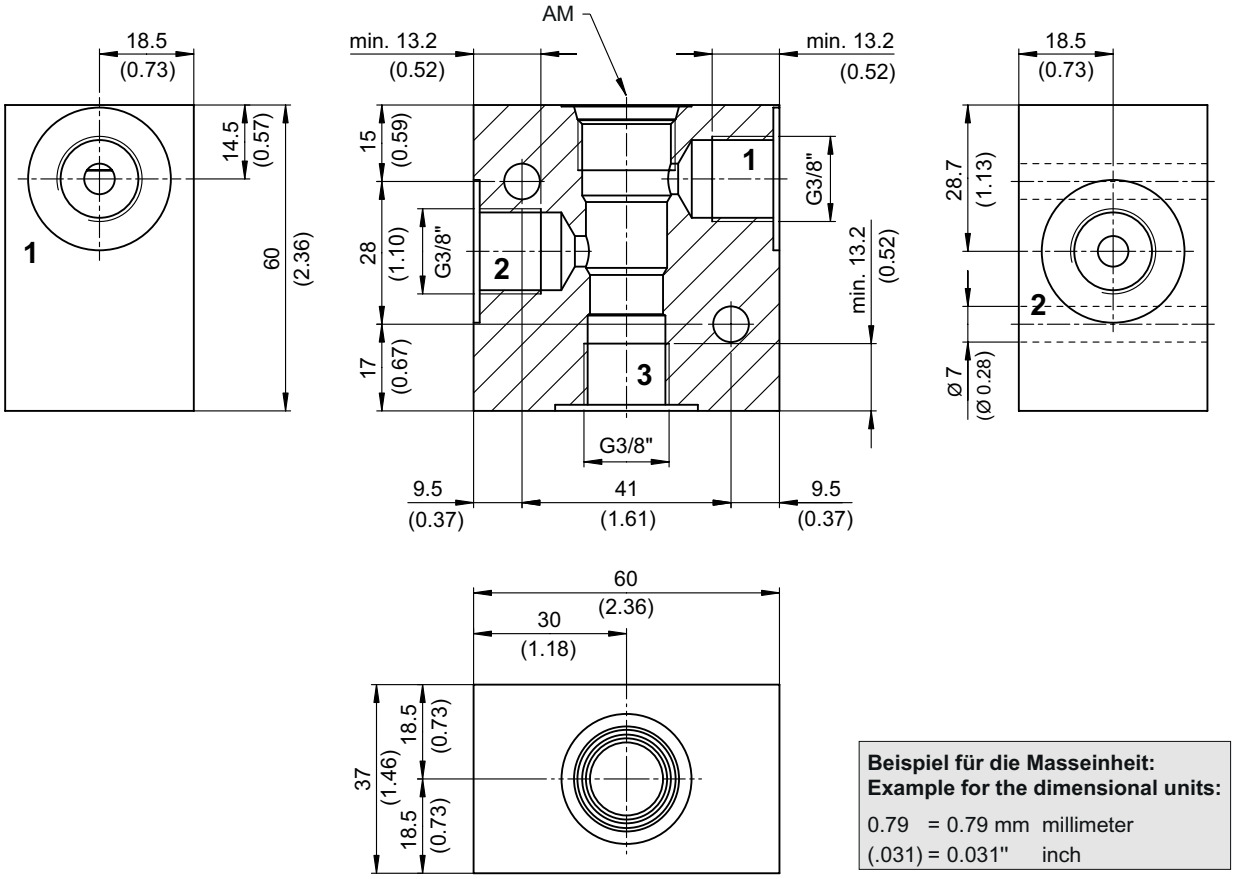

Beispiel für die Masseinheit:
Example for the dimensional units:

0.79 = 0.79 mm millimeter
(.031) = 0.031" inch

© 2022 by Bucher Hydraulics AG Frutigen, 3714 Frutigen, Switzerland

All rights reserved.
Data is provided for the purpose of product description only, and must not be construed as warranted characteristics in the legal sense. The information does not relieve users from the duty of conducting their own evaluations and tests. Because the products are subject to continual improvement, we reserve the right to amend the product specifications contained in this catalogue.

BUCHER hydraulics

WWW.SUMY.IR

Valve accessory
Threaded port body

Type series: GOA-12...

- For cavity OA/C1025
- All external parts with zinc-nickel plating according to DIN EN ISO 19598
- Functionless threaded port body
- Port sizes of the main connections G 1/2"
- Optimized Δp values
- Suitable for piping assembly
- Can be fixed with 2× cap screws

Technical data

General characteristics	Description, value, unit
Function group	Valve accessory
Function	Threaded port body
Maximum operating pressure	420 bar
Weight	2.07 kg
Cavity acc. factory standard	For cavity OA/C1025
Surface protection	All external parts with zinc-nickel plating according to DIN EN ISO 19598

Dimensions and sectional view

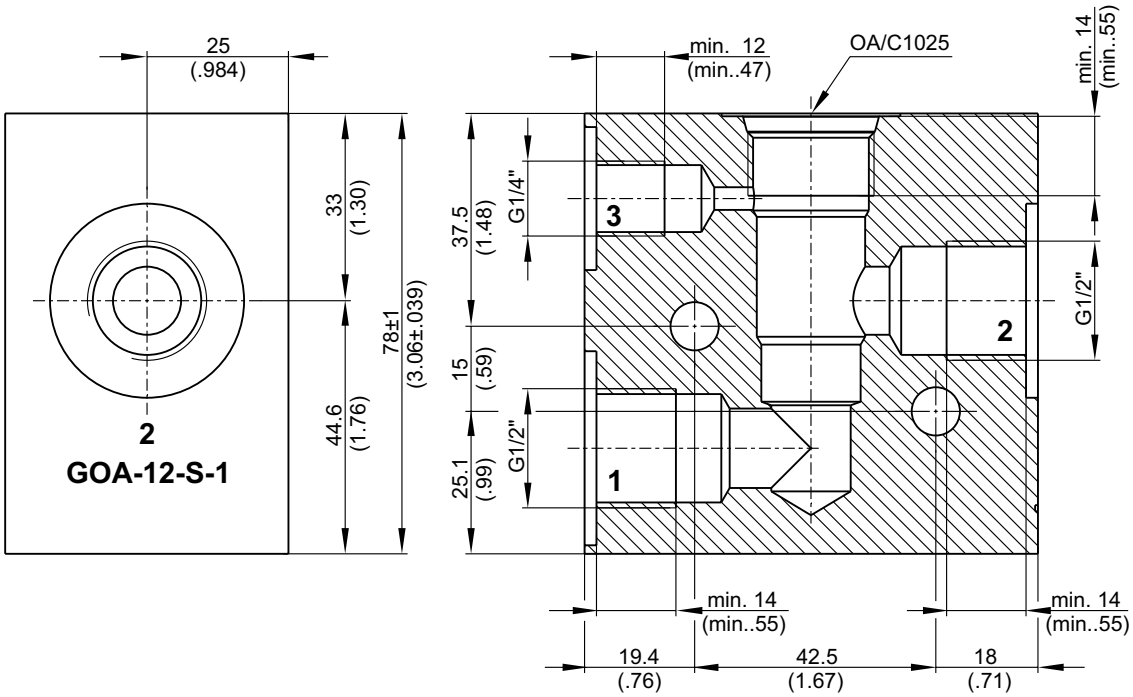

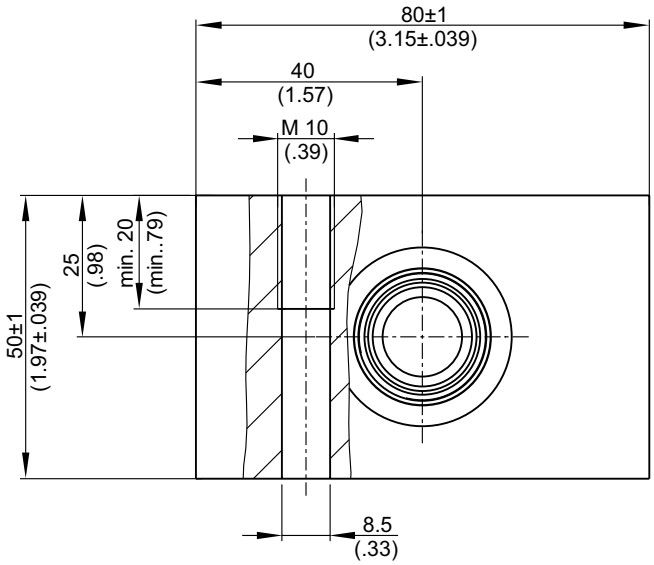

Beispiel für die Masseinheit:
Example for the dimensional units:

0.79 = 0.79 mm millimeter
(.031) = 0.031" inch

Ordering code

Ex. GOA - 12 - S - 1

GOA	= threaded port body for cavity OA/C1025
12	= connection size of the main ports G1/2"
S	= material design steel *(standard)*
A	= material design aluminium with limited performance data *(on request)*
1…9	= technical design no. (omit when ordering)

info.ch@bucherhydraulics.com **www.bucherhydraulics.com**

© 2023 by Bucher Hydraulics AG Frutigen, 3714 Frutigen, Switzerland

All rights reserved.
Data is provided for the purpose of product description only, and must not be construed as warranted characteristics in the legal sense. The information does not relieve users from the duty of conducting their own evaluations and tests. Because the products are subject to continual improvement, we reserve the right to amend the product specifications contained in this catalogue.

WWW.SUMY.IR

Valve accessory
Threaded port body

Type series: GAU-12-...

- For cavity AU/C1030
- All external parts with zinc-nickel coating according to DIN EN ISO 19598
- Functionless threaded port body
- Port sizes of the main connections G 1/2"
- Optimized Δp values
- Suitable for piping assembly
- Can be fixed with 2× cap screws

Technical data

General Characteristics	Description, value, unit
Function group	Valve accessory
Function	Threaded port body
Maximum operating pressure	420 bar
Weight	2.0 kg
Cavity acc. factory standard	For cavity AU/C1030
Surface protection	All external parts with zinc-nickel coating according to DIN EN ISO 19598

Dimensions and sectional view

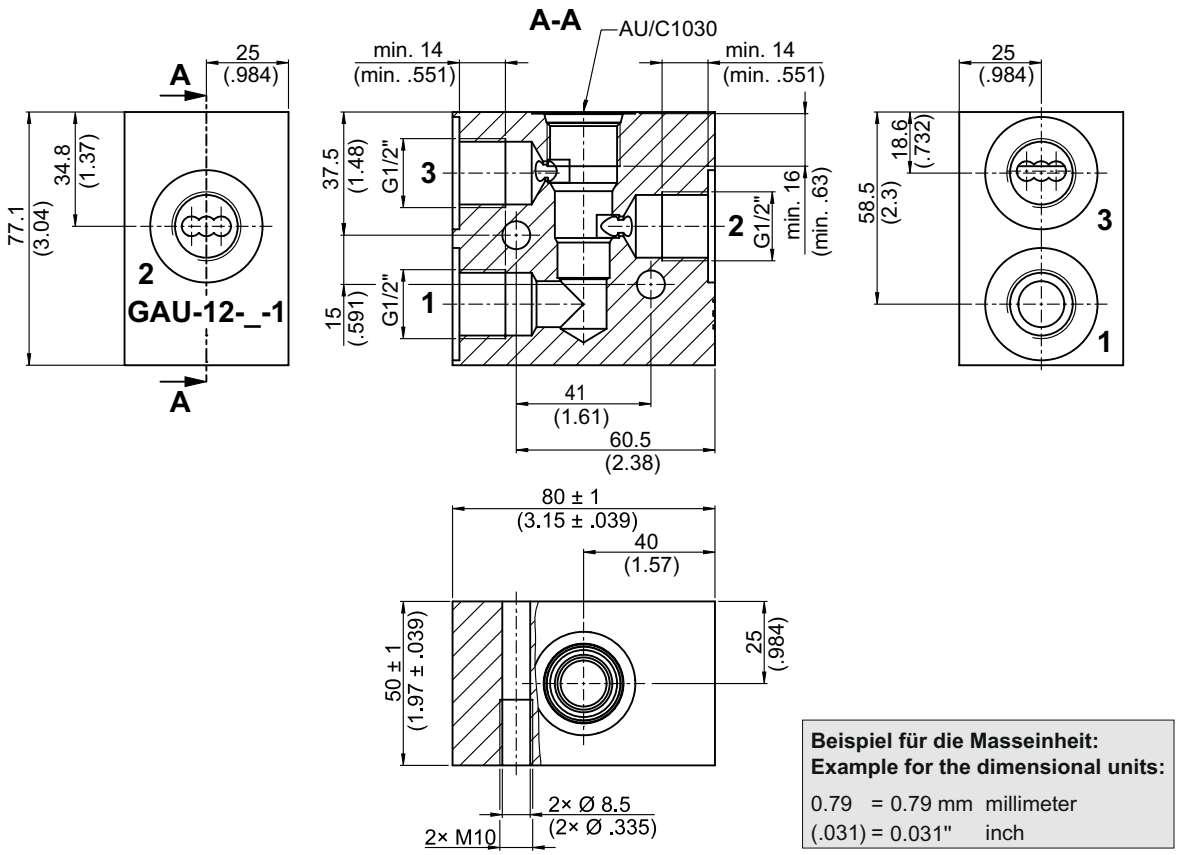

Beispiel für die Masseinheit:
Example for the dimensional units:

0.79 = 0.79 mm millimeter
(.031) = 0.031" inch

Ordering code

Ex. GAU - 12 - S - 1

GAU	= threaded port body for cavity AU/C1030
12	= connection size of the main ports G 1/2"
S	= material design steel *(standard)*
A	= material design aluminium with limited performance data *(on request)*
1…9	= technical design no. (omit when ordering)

info.ch@bucherhydraulics.com **www.bucherhydraulics.com**

© 2021 by Bucher Hydraulics AG Frutigen, 3714 Frutigen, Switzerland

All rights reserved.
Data is provided for the purpose of product description only, and must not be construed as warranted characteristics in the legal sense. The information does not relieve users from the duty of conducting their own evaluations and tests. Because the products are subject to continual improvement, we reserve the right to amend the product specifications contained in this catalogue.

BUCHER hydraulics

WWW.SUMY.IR

Valve accessory
Threaded port body

Type series: GCBA

- For cavity DN
- All external parts with zinc-nickel coating according to DIN EN ISO 19598
- Functionless threaded port body
- Port sizes of the main connections G 1"
- Optimized Δp values
- Suitable for piping assembly
- Can be fixed with 2x cap screws

Technical data

General Characteristics	Description, value, unit
Function group	Valve accessory
Function	Threaded port body
Maximum operating pressure	350 bar
Weight	6.30 kg
Cavity acc. factory standard	For cavity DN
Surface protection	All external parts with zinc-nickel coating according to DIN EN ISO 19598

Dimensions and sectional view

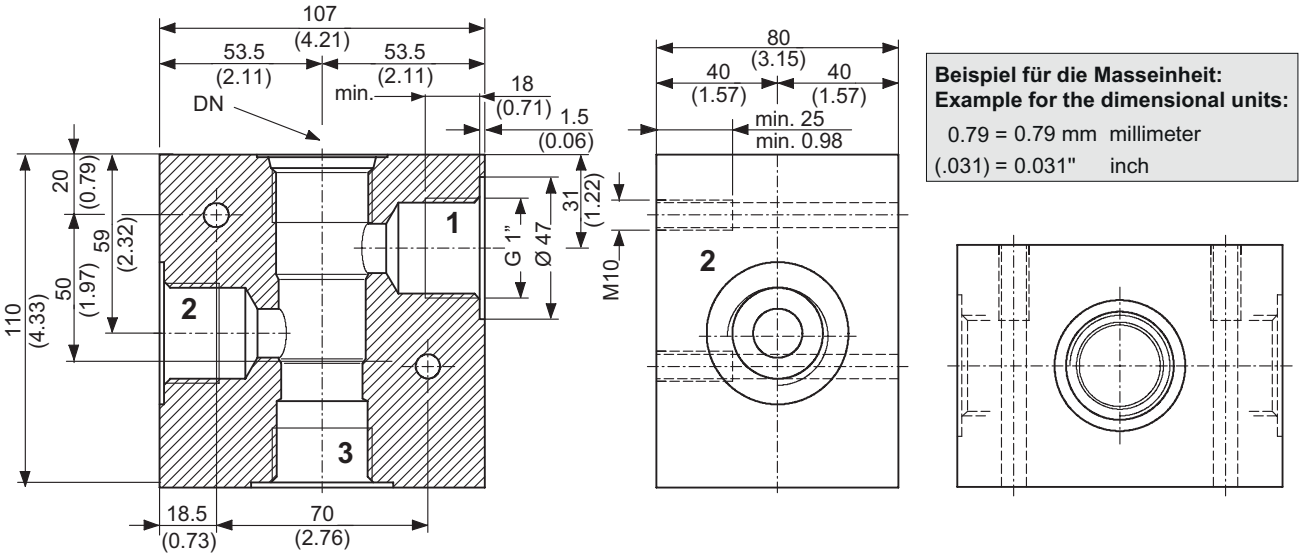

© 2021 by Bucher Hydraulics AG Frutigen, 3714 Frutigen, Switzerland

All rights reserved.
Data is provided for the purpose of product description only, and must not be construed as warranted characteristics in the legal sense. The information does not relieve users from the duty of conducting their own evaluations and tests. Because the products are subject to continual improvement, we reserve the right to amend the product specifications contained in this catalogue.

BUCHER hydraulics

WWW.SUMY.IR

Valve accessory
Threaded port body

Type series: GEBAA

- For cavity EB
- All external parts with zinc-nickel coating according to DIN EN ISO 19598
- Functionless threaded port body
- Port sizes of the main connections G 1"
- Optimized Δp values
- Suitable for piping assembly
- Can be fixed with 2× cap screws

Technical data

General Characteristics	Description, value, unit
Function group	Valve accessory
Function	Threaded port body
Maximum operating pressure	420 bar
Weight	5.45 kg
Cavity acc. factory standard	For cavity EB
Surface protection	All external parts with zinc-nickel coating according to DIN EN ISO 19598

Dimensions and sectional view

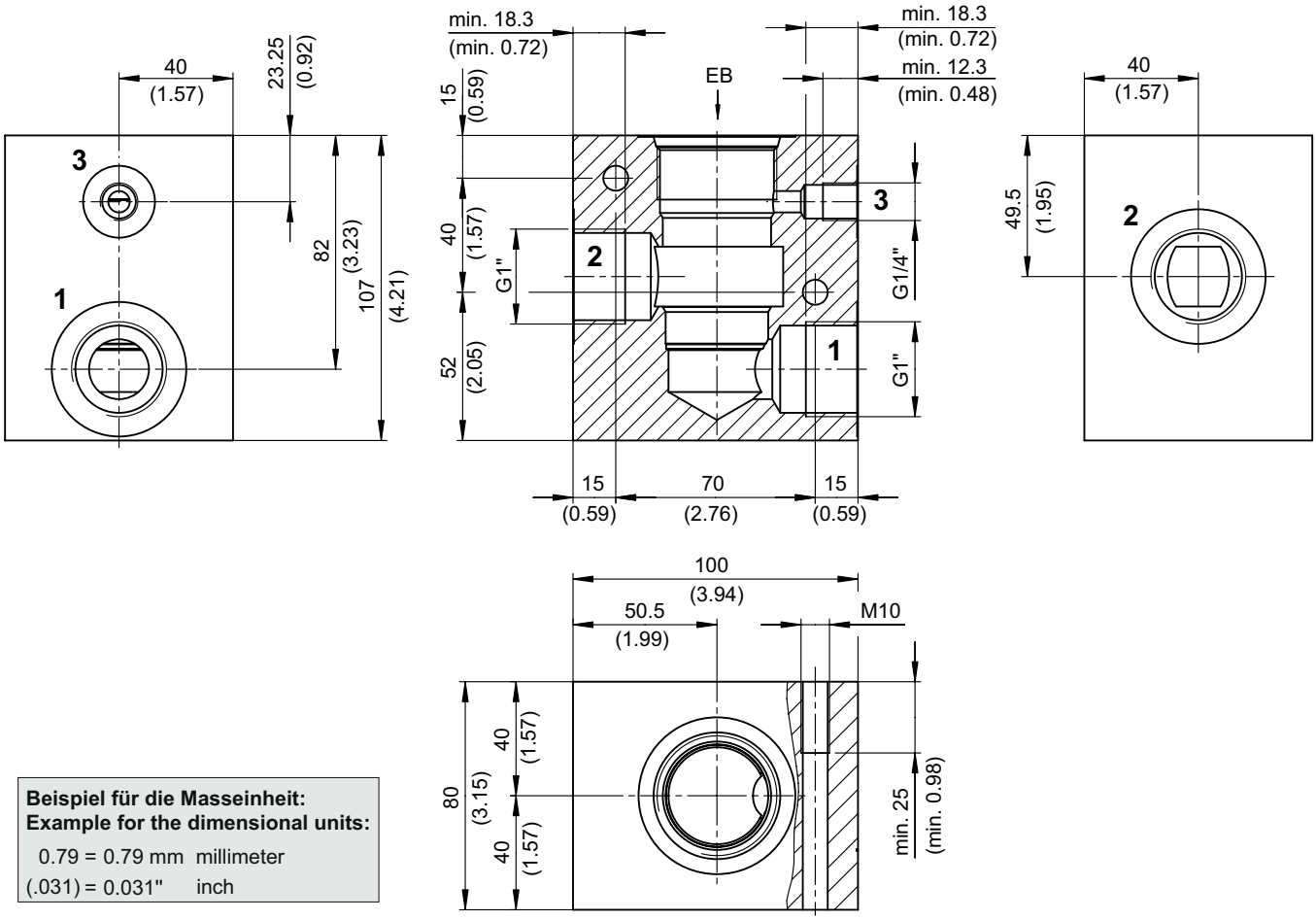

Beispiel für die Masseinheit:
Example for the dimensional units:

0.79 = 0.79 mm millimeter
(.031) = 0.031" inch

© 2021 by Bucher Hydraulics AG Frutigen, 3714 Frutigen, Switzerland

All rights reserved.
Data is provided for the purpose of product description only, and must not be construed as warranted characteristics in the legal sense. The information does not relieve users from the duty of conducting their own evaluations and tests. Because the products are subject to continual improvement, we reserve the right to amend the product specifications contained in this catalogue.

BUCHER
hydraulics
WWW.SUMY.IR

General information
Cavity

Type series: BG

Dimensions and sectional view

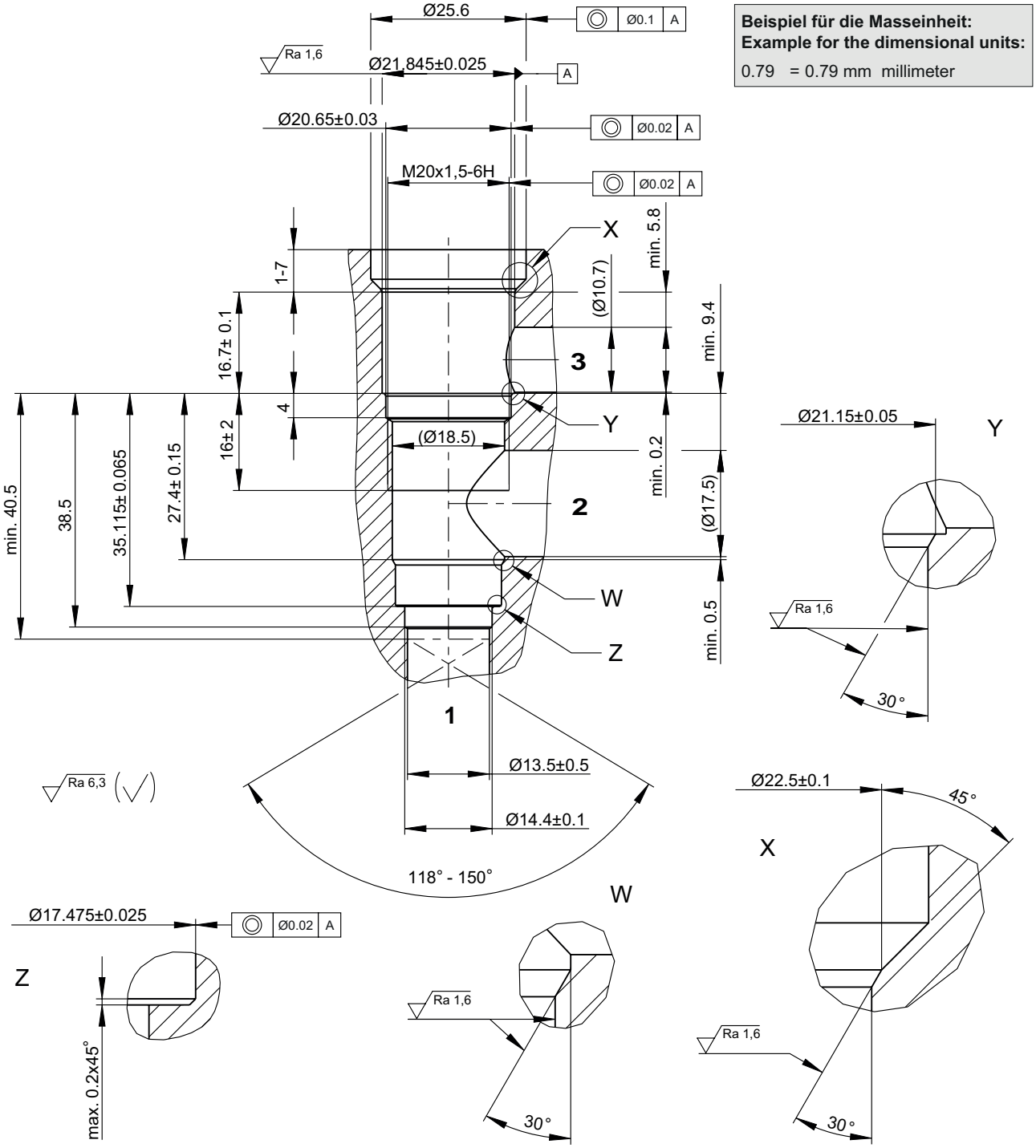

Installation information

ATTENTION!
You must maintain the specified positional and diametral tolerances. To ensure trouble-free operation of the screw-in cartridges, we strongly recommend that pilot drilling, boring, reaming and cavity thread-cutting are always performed in one setup.

NOTE!
We offer form tool sets for sale or hire. For further information, see data sheet 400-P-040011.

NOTE!
Cavity type to factory standard.

info.ch@bucherhydraulics.com **www.bucherhydraulics.com**

© 2023 by Bucher Hydraulics AG Frutigen, 3714 Frutigen, Switzerland

All rights reserved.
Data is provided for the purpose of product description only, and must not be construed as warranted characteristics in the legal sense. The information does not relieve users from the duty of conducting their own evaluations and tests. Because the products are subject to continual improvement, we reserve the right to amend the product specifications contained in this catalogue.

WWW.SUMY.IR

Valve accessory
Threaded port body

Type series: GBG-12...

- For cavity BG
- All external parts with zinc-nickel plating according to DIN EN ISO 19598
- Corresponds to cavity type T11-A
- Port sizes of the main connections G 1/2"
- Optimized Δp values
- Suitable for piping assembly
- Can be fixed with 2× cap screws

Technical data

General characteristics	Description, value, unit
Function group	Valve accessory
Function	Threaded port body
Maximum operating pressure	420 bar
Weight	1.6 kg
Cavity acc. factory standard	For cavity BG
Surface protection	All external parts with zinc-nickel plating according to DIN EN ISO 19598

Dimensions and sectional view

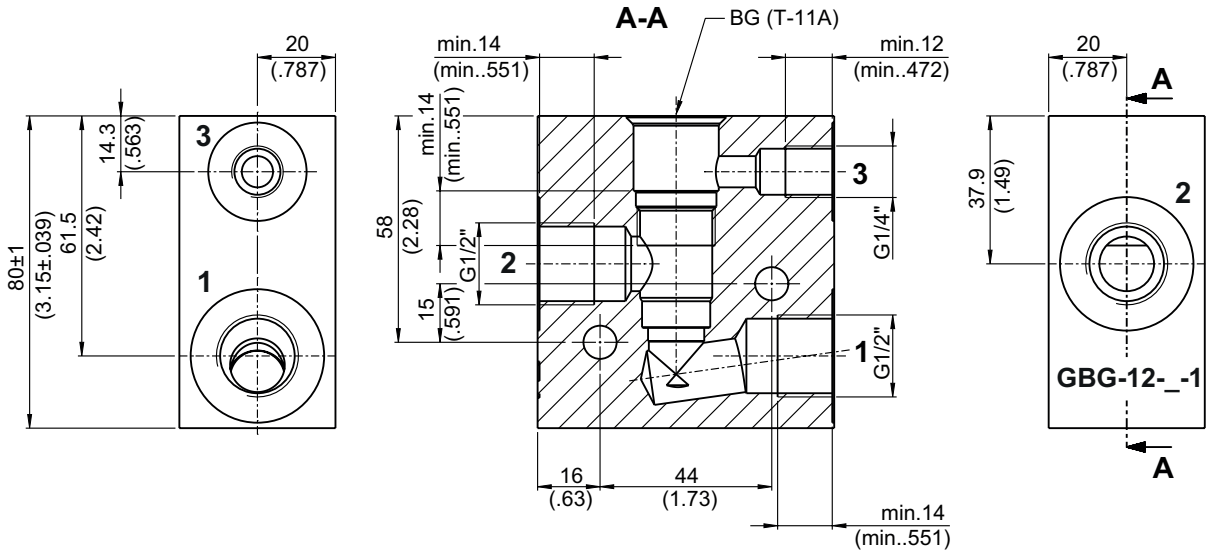

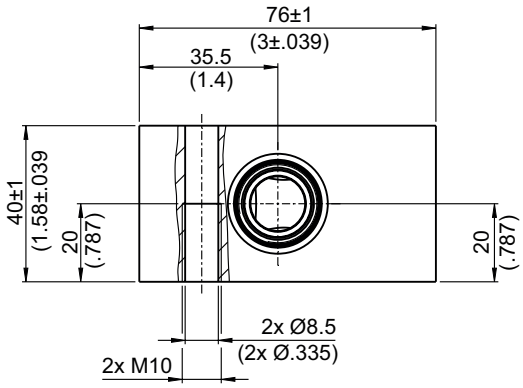

Beispiel für die Masseinheit:
Example for the dimensional units:

0.79 =	0.79 mm	millimeter
(.031) =	0.031"	inch

Ordering code

Ex. GBG - 12 - S - 1

GBG	= threaded port body for cavity BG
12	= connection size of the main ports G 1/2"
S	= material design steel *(standard)*
A	= material design aluminium with limited performance data *(on request)*
1…9	= technical design no. (omit when ordering)

info.ch@bucherhydraulics.com **www.bucherhydraulics.com**

© 2022 by Bucher Hydraulics AG Frutigen, 3714 Frutigen, Switzerland

All rights reserved.
Data is provided for the purpose of product description only, and must not be construed as warranted characteristics in the legal sense. The information does not relieve users from the duty of conducting their own evaluations and tests. Because the products are subject to continual improvement, we reserve the right to amend the product specifications contained in this catalogue.

BUCHER hydraulics

WWW.SUMY.IR

Valve accessory
Threaded port body

Type series: GADJA

- For cavity DJ
- All external parts with zinc-nickel coating according to DIN EN ISO 19598
- Functionless threaded port body
- Port sizes of the main connections G 3/4"
- Optimized Δp values
- Suitable for piping assembly
- Can be fixed with 2x cap screws

Technical data

General Characteristics	Description, value, unit
Function group	Valve accessory
Function	Threaded port body
Maximum operating pressure	425 bar
Weight	2.27 kg
Cavity acc. factory standard	For cavity DJ
Surface protection	All external parts with zinc-nickel coating according to DIN EN ISO 19598

Dimensions and sectional view

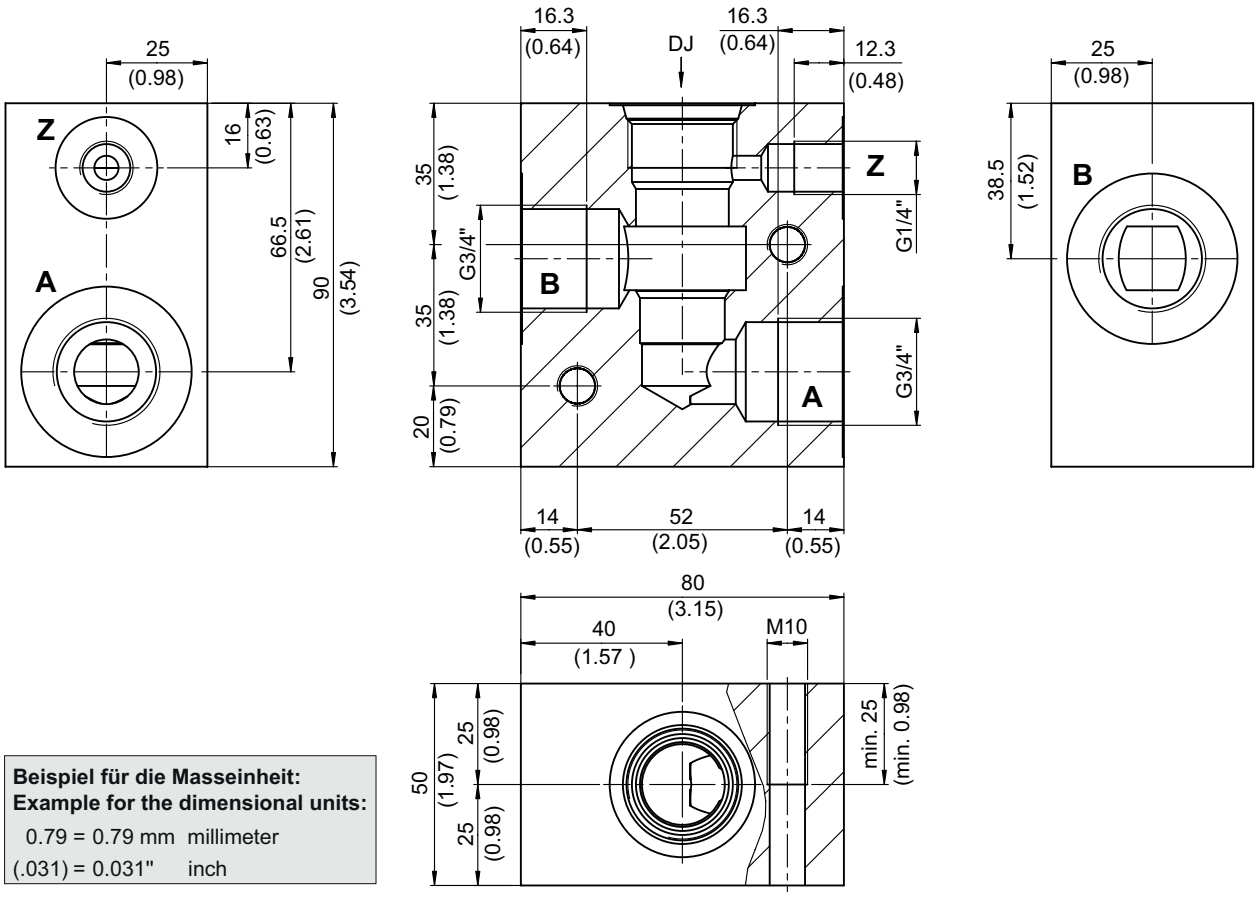

Beispiel für die Masseinheit:
Example for the dimensional units:

0.79 = 0.79 mm millimeter
(.031) = 0.031" inch

© 2021 by Bucher Hydraulics AG Frutigen, 3714 Frutigen, Switzerland

All rights reserved.
Data is provided for the purpose of product description only, and must not be construed as warranted characteristics in the legal sense. The information does not relieve users from the duty of conducting their own evaluations and tests. Because the products are subject to continual improvement, we reserve the right to amend the product specifications contained in this catalogue.

WWW.SUMY.IR

Valve accessory
Threaded port body

Type series: GCRA

- All external parts with zinc-nickel coating according to DIN EN ISO 19598
- Functionless threaded port body
- Port sizes of the main connections G 1/2"
- Optimized Δp values
- Suitable for piping assembly
- Can be fixed with 2x cap screws

Technical data

General Characteristics	Description, value, unit
Function group	Valve accessory
Function	Threaded port body
Maximum operating pressure	350 bar
Weight	2.75 kg
Surface protection	All external parts with zinc-nickel coating according to DIN EN ISO 19598

Dimensions and sectional view

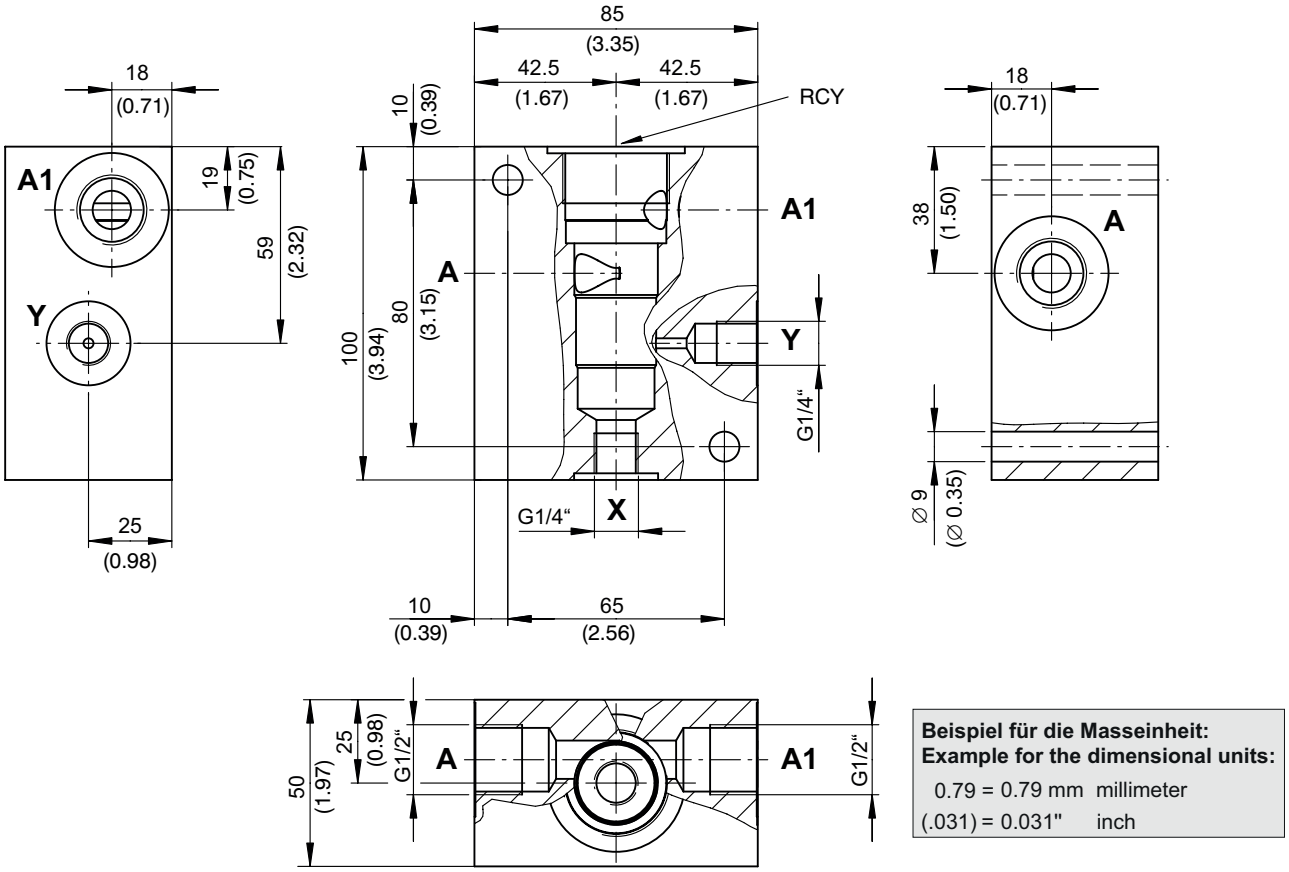

Beispiel für die Masseinheit:
Example for the dimensional units:

0.79 = 0.79 mm	millimeter
(.031) = 0.031"	inch

© 2021 by Bucher Hydraulics AG Frutigen, 3714 Frutigen, Switzerland

All rights reserved.
Data is provided for the purpose of product description only, and must not be construed as warranted characteristics in the legal sense. The information does not relieve users from the duty of conducting their own evaluations and tests. Because the products are subject to continual improvement, we reserve the right to amend the product specifications contained in this catalogue.

BUCHER hydraulics

WWW.SUMY.IR

Valve accessory
Threaded port body

Type series: GCPA

- For cavity DP
- All external parts with zinc-nickel coating according to DIN EN ISO 19598
- Functionless threaded port body
- Port sizes of the main connections G 1/2"
- Optimized Δp values
- Suitable for piping assembly
- Can be fixed with 2x cap screws

Technical data

General Characteristics	Description, value, unit
Function group	Valve accessory
Function	Threaded port body
Maximum operating pressure	350 bar
Weight	3.95 kg
Cavity acc. factory standard	For cavity DP
Surface protection	All external parts with zinc-nickel coating according to DIN EN ISO 19598

Dimensions and sectional view

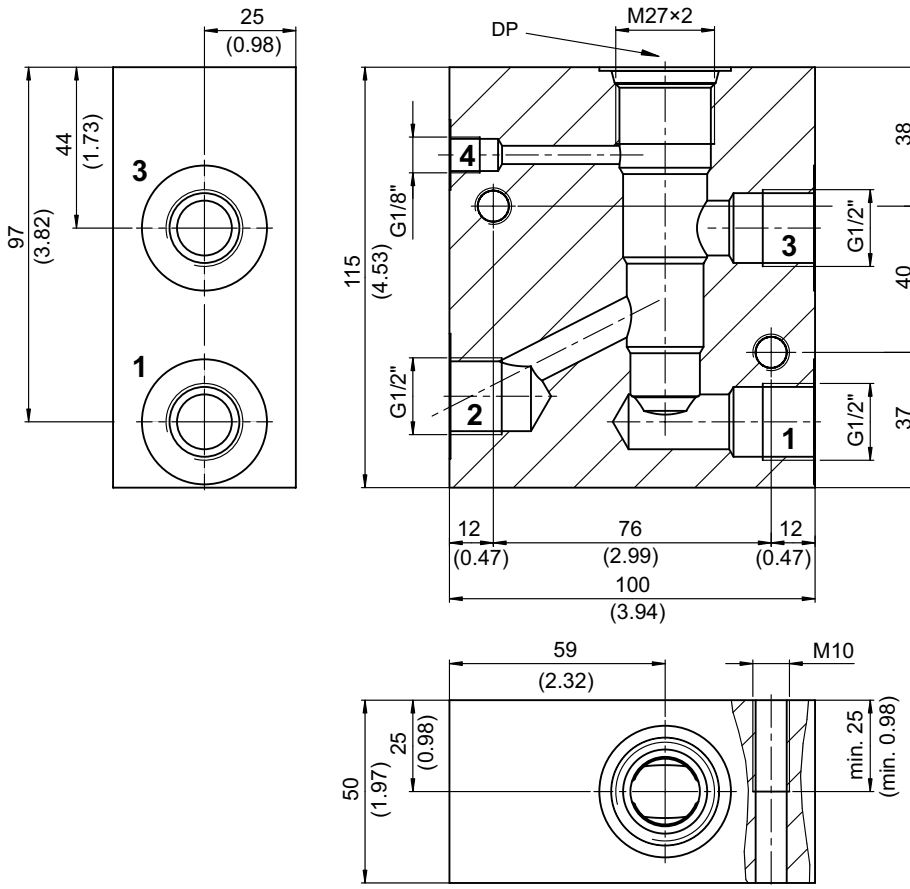

Beispiel für die Masseinheit:
Example for the dimensional units:

0.79 = 0.79 mm millimeter
(.031) = 0.031" inch

info.ch@bucherhydraulics.com **www.bucherhydraulics.com**

© 2021 by Bucher Hydraulics AG Frutigen, 3714 Frutigen, Switzerland

All rights reserved.
Data is provided for the purpose of product description only, and must not be construed as warranted characteristics in the legal sense. The information does not relieve users from the duty of conducting their own evaluations and tests. Because the products are subject to continual improvement, we reserve the right to amend the product specifications contained in this catalogue.

BUCHER hydraulics

WWW.SUMY.IR

Valve accessory
Threaded port body

Type series: GCPAA

- For cavity DP
- All external parts with zinc-nickel coating according to DIN EN ISO 19598
- Port sizes of the main connections G 1/2"
- Optimized Δp values
- Suitable for piping assembly
- Can be fixed with 2x cap screws
- With built-in check valve

Technical data

General Characteristics	Description, value, unit
Function group	Valve accessory
Function	Threaded port body
Maximum operating pressure	350 bar
Weight	3.95 kg
Cavity acc. factory standard	For cavity DP
Surface protection	All external parts with zinc-nickel coating according to DIN EN ISO 19598

Dimensions and sectional view

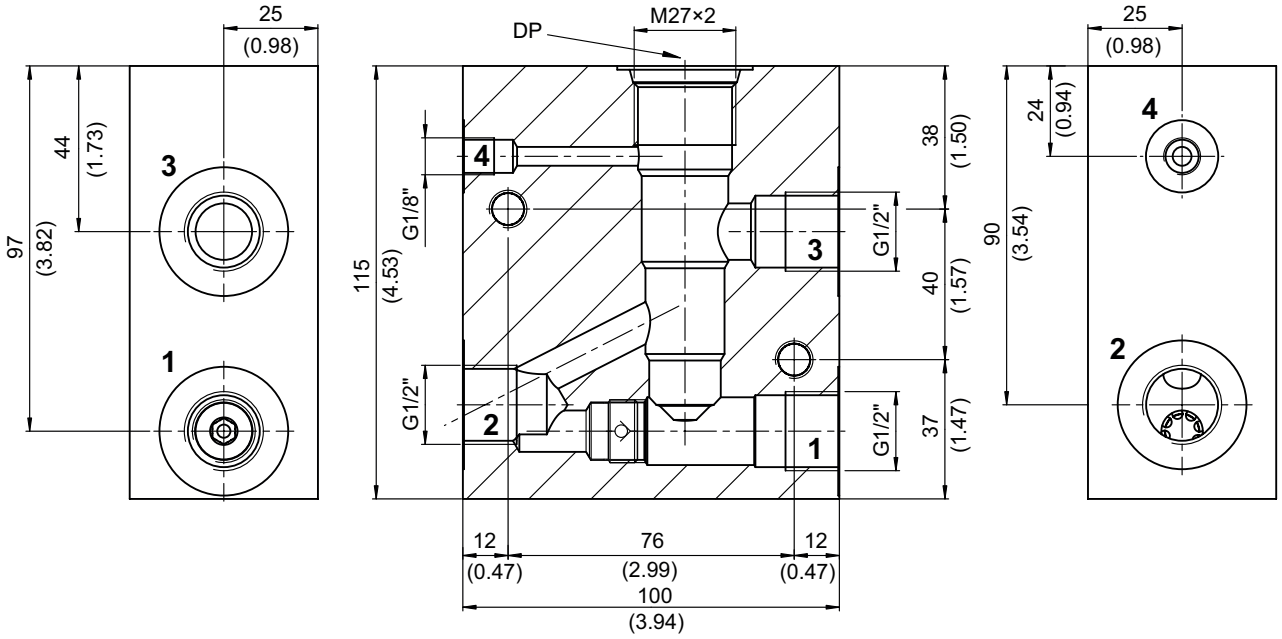

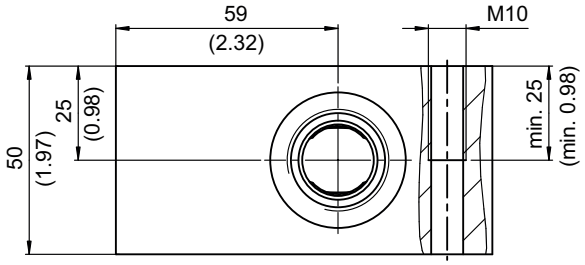

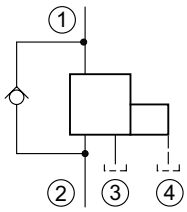

Beispiel für die Masseinheit:
Example for the dimensional units:

0.79 = 0.79 mm millimeter
(.031) = 0.031" inch

info.ch@bucherhydraulics.com **www.bucherhydraulics.com**

© 2021 by Bucher Hydraulics AG Frutigen, 3714 Frutigen, Switzerland

All rights reserved.
Data is provided for the purpose of product description only, and must not be construed as warranted characteristics in the legal sense. The information does not relieve users from the duty of conducting their own evaluations and tests. Because the products are subject to continual improvement, we reserve the right to amend the product specifications contained in this catalogue.

BUCHER hydraulics

WWW.SUMY.IR

Valve accessory
Threaded port body

Type series: GAT-12-...

- For cavity AT/C1040
- All external parts with zinc-nickel coating according to DIN EN ISO 19598
- Functionless threaded port body
- Port sizes of the main connections G 1/2"
- Optimized Δp values
- Suitable for piping assembly
- Can be fixed with 2× cap screws

Technical data

General Characteristics	Description, value, unit
Function group	Valve accessory
Function	Threaded port body
Maximum operating pressure	420 bar
Weight	2.3 kg
Cavity acc. factory standard	For cavity AT/C1040
Surface protection	All external parts with zinc-nickel coating according to DIN EN ISO 19598

Dimensions and sectional view

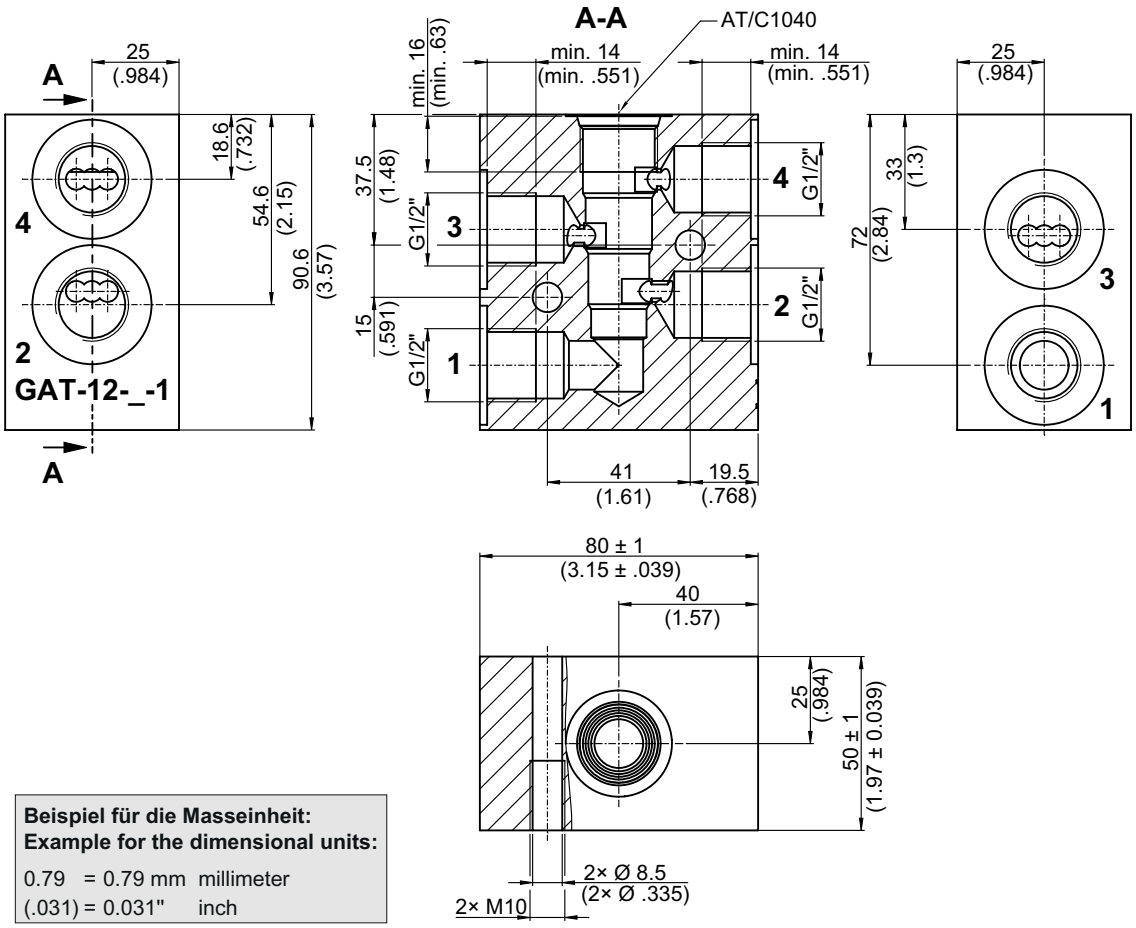

Beispiel für die Masseinheit:
Example for the dimensional units:

0.79 = 0.79 mm millimeter
(.031) = 0.031" inch

Ordering code

Ex. GAT - 12 - S - 1

GAT = threaded port body for cavity AT/C1040
12 = connection size of the main ports G 1/2"
S = material design steel *(standard)*
A = material design aluminium with limited performance data *(on request)*
1…9 = technical design no. (omit when ordering)

info.ch@bucherhydraulics.com **www.bucherhydraulics.com**

© 2021 by Bucher Hydraulics AG Frutigen, 3714 Frutigen, Switzerland

All rights reserved.
Data is provided for the purpose of product description only, and must not be construed as warranted characteristics in the legal sense. The information does not relieve users from the duty of conducting their own evaluations and tests. Because the products are subject to continual improvement, we reserve the right to amend the product specifications contained in this catalogue.

BUCHER hydraulics

WWW.SUMY.IR

Valve accessory
Threaded port body

Type series: GANA

- For cavity AN
- All external parts with zinc-nickel coating according to DIN EN ISO 19598
- Functionless threaded port body
- Port sizes of the main connections G 3/8"
- Optimized Δp values
- Suitable for piping assembly
- Can be fixed with 2x cap screws

Technical data

General Characteristics	Description, value, unit
Function group	Valve accessory
Function	Threaded port body
Maximum operating pressure	420 bar
Weight	1.0 kg
Cavity acc. factory standard	For cavity AN
Surface protection	All external parts with zinc-nickel coating according to DIN EN ISO 19598

Dimensions and sectional view

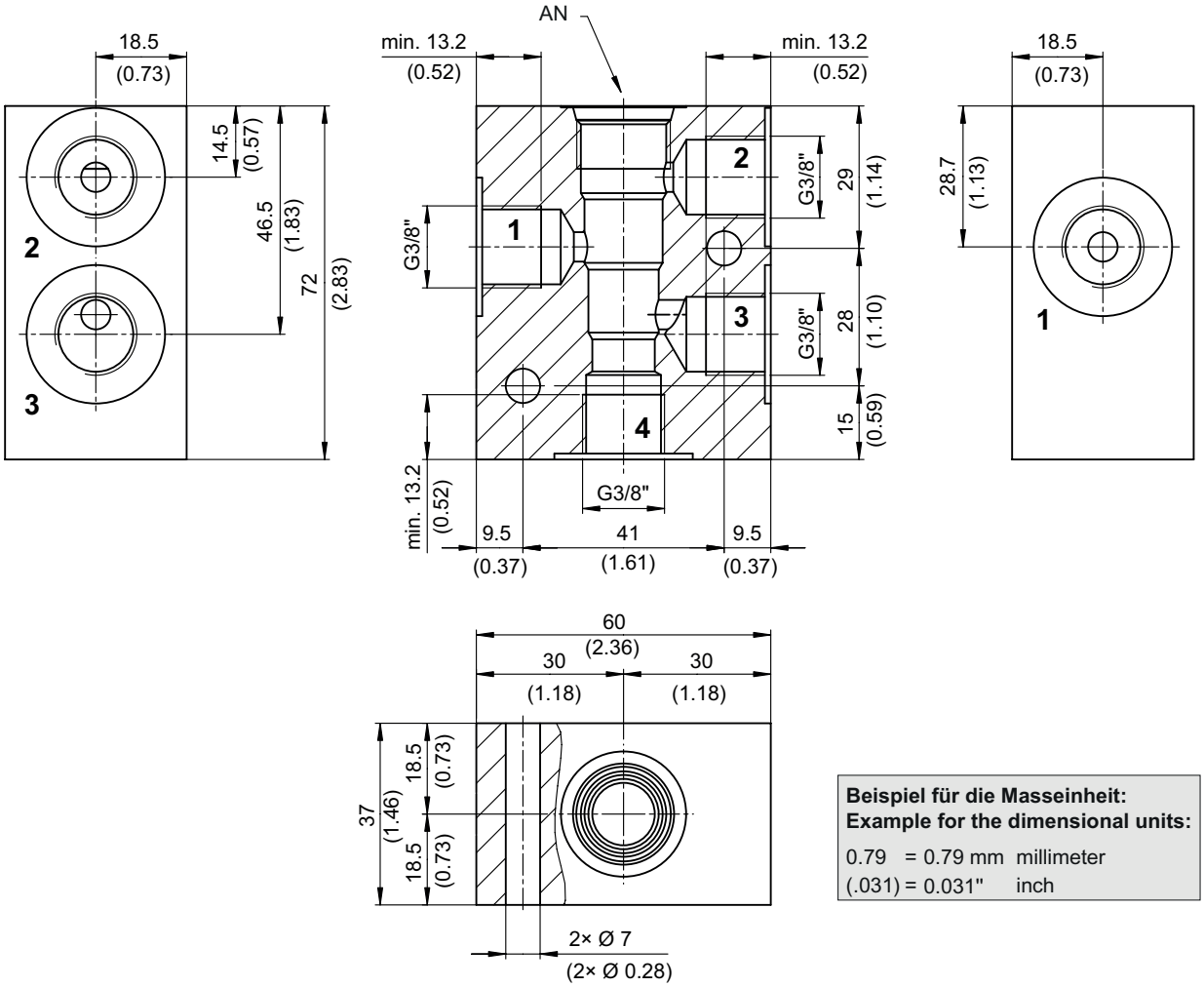

Beispiel für die Masseinheit:
Example for the dimensional units:

0.79 = 0.79 mm millimeter
(.031) = 0.031" inch

info.ch@bucherhydraulics.com **www.bucherhydraulics.com**

© 2021 by Bucher Hydraulics AG Frutigen, 3714 Frutigen, Switzerland

All rights reserved.
Data is provided for the purpose of product description only, and must not be construed as warranted characteristics in the legal sense. The information does not relieve users from the duty of conducting their own evaluations and tests. Because the products are subject to continual improvement, we reserve the right to amend the product specifications contained in this catalogue.