ATLANTIC
Fluid Tech
WWW.SUMY.IR

CARTRIDGES CATALOGUE

INDEX

ATLANTIC Fluid Tech

www.sumy.ir
WWW.SUMY.IR

SECTION	TITLE	Page
SECTION 1	Relief Valves	1.00.000
SECTION 2	Pressure Reducing Valves	2.00.000
SECTION 3	Check Valves	3.00.000
SECTION 4	Pilot Operated Check Valves	4.00.000
SECTION 5	Shuttle and Logic Elements	5.00.000
SECTION 6	Flow Dividers and Combiners	6.00.000
SECTION 7	Flow Control Valves	7.00.000
SECTION 8	Solenoid Cartridges	8.00.000
SECTION 9	Proportional Cartridges	9.00.000
SECTION 10	Coils and Connectors	10.00.000
SECTION 11	Accessories and Spare	11.00.000
SECTION 12	Standard Manifolds	12.00.000
SECTION 13	Cavities and Technical Drawings	13.00.000
	Technical Specifications	
	General Terms of Supply - Outline Agreement	

ATLANTIC
Fluid Tech
WWW.SUMY.IR

WWW.SUMY.IR

SECTION 1

Relief Valves

SECTION 1

RELIEF VALVES

WWW.SUMY.IR

Hydraulic scheme	Valve description	Valve type	Rated flow l/min (gpm)	Max. pressure bar (psi)	Installation	Main port size or cavity type	Page
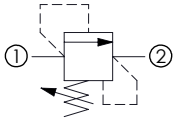	CPLN-005-DPNA	Direct acting, poppet type	1,5 (0,4)	460 (6600)	Cartridge	VP000005	1.01.**010**
	CPLN-020-DPNA	Direct acting, poppet type	20 (5)	420 (6000) 350 (5000)	Cartridge	SAE-08-2N	1.01.**020** 1.01.**030**
	CPLN-XXX-DHNA	Direct acting, poppet type	30 (8)	500 (7200)	Cartridge	VP000008	1.01.**040**
	CPLN-080-DPNA	Direct acting, poppet type	80 (21)	420 (6000)	Cartridge	VP000086	1.01.**050**
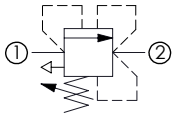	CPLT-005-DPNA	Direct acting, with filter, compensated	1,5 (0,4)	460 (6700)	Cartridge	VP000005	1.02.**060**
	CPLT-030-DHNA	Direct acting, poppet type, compensated	30 (8)	420 (6000)	Cartridge	VP000008	1.02.**070**
	CPLV-080-DHNA	Direct acting, poppet type, chamber vented	80 (21)	350 (5000)	Cartridge	SAE-16-3C	1.02.**080**
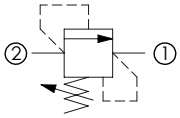	CPLN-040-DHGD	Differential, poppet type	40 (11)	350 (5000)	Cartridge	VP000080	1.03.**090**
	CPLN-090-DHGA	Direct acting, poppet type	90 (24)	380 (5400)	Cartridge	VP000249	1.03.**100**
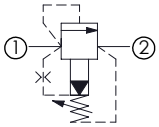	CPLN-120-PSNA	Pilot operated, spool type	120 (32)	350 (5000)	Cartridge	SAE-10-2N	1.04.**110**
	CPLN-300-PSNA	Pilot operated, spool type	300 (79)	350 (5000)	Cartridge	SAE-16-2N	1.04.**120**
	CPLN-500-PHNA	Pilot operated, spool type	500 (132)	350 (5000)	Cartridge	SAE-20-2N	1.04.**130**
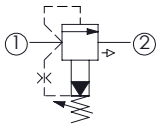	CPLT-120-PSNA	Pilot operated, spool type, compensated	120 (32)	350 (5000)	Cartridge	SAE-10-2N	1.05.**140**
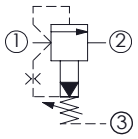	CPLV-120-PSNA	Pilot operated, spool type	120 (32)	350 (5000)	Cartridge	SAE-10-2N	1.06.**150**

RELIEF VALVE

CPLN-005-DPNA

DIRECT ACTING WITH FILTER

ATLANTIC Fluid Tech
WWW.SUMY.IR

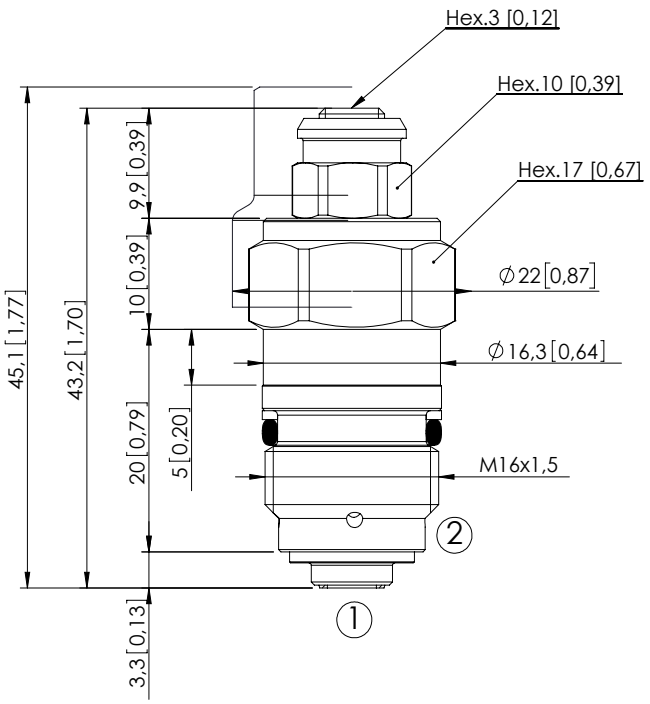

Dimensions: mm [inches]

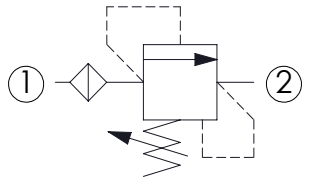

SPECIFICATIONS

Max. operating pressure:	460 bar (6700 psi)
Rated flow:	1,5 l/min (0,4 gpm)
Cavity:	VP000005
Weight:	0,05 kg (0,11 lbs)
Contamination class to ISO 4406:	See technical spec.
Seal kit:	RC700005
Installation torque:	27 - 33 Nm (20 - 24 ft-lb)
MTTFd:	150 - 1200 years: See technical spec.

NOTES

For other configurations/quick codes not available in this catalogue page please consult factory

SEALING CAP

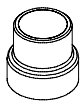

Ordering code:
ST000014

CURVES

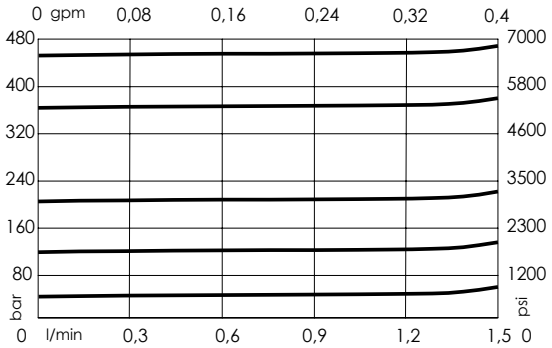

ORDERING CODES

Quick code	Description	Standard setting (cracking pressure)	Adjustment range	Pressure increase
CP000015	CPLN-005-DPNA-PF-005-N460	460 bar (6700 psi)	150-460 bar (2100-6700 psi)	236 bar/turn (3400 psi/turn)
CP000002	CPLN-005-DPNA-PF-005-N350	350 bar (5000 psi)	120-350 bar (1700-5000 psi)	165 bar/turn (2400 psi/turn)
CP000029	CPLN-005-DPNA-PF-005-N200	200 bar (2800 psi)	100-200 bar (1500-2900 psi)	75 bar/turn (1100 psi/turn)
CP000030	CPLN-005-DPNA-PF-005-N100	100 bar (1400 psi)	25-100 bar (400-1500 psi)	41 bar/turn (600 psi/turn)
CP000277	CPLN-005-DPNA-PF-005-N040	40 bar (600 psi)	10-40 bar (150-600 psi)	22 bar/turn (300 psi/turn)

Revision A1

RELIEF VALVE

CPLN-020-DPNA

DIRECT ACTING
STABILIZED PISTON

ATLANTIC Fluid Tech
WWW.SUMY.IR

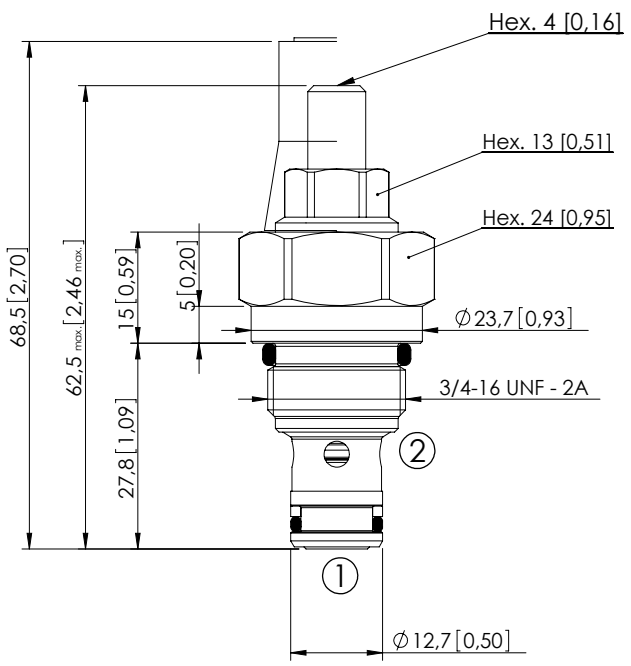

Dimensions: mm [inches]

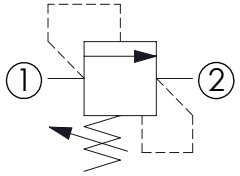

SPECIFICATIONS

Max. operating pressure:	420 bar (6000 psi)
Rated flow:	20 l/min (5 gpm)
Cavity:	SAE-08-2N
Weight:	0,1 kg (0,22 lbs)
Contamination class to ISO 4406:	See technical spec.
Seal kit:	RA700081
Installation torque:	45 - 50 Nm (33 - 37 ft-lb)
MTTFd:	150 - 1200 years: See technical spec.

NOTES

For other configurations/quick codes not available in this catalogue page please consult factory

SEALING CAP

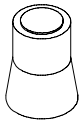

Ordering code:
AT000020

CURVES

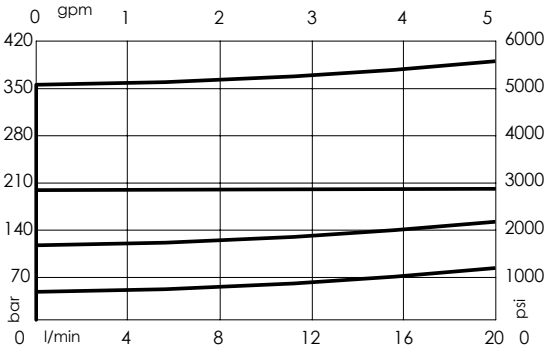

ORDERING CODES

Quick code	Description	Standard setting (cracking pressure)	Adjustment range	Pressure increase
CP000168	CPLN-020-DPNA-SN-S08-N420	350 bar (5000 psi)	200-420 bar (2800-6000 psi)	207 bar/turn (3000 psi/turn)
CP000025	CPLN-020-DPNA-SN-S08-N350	350 bar (5000 psi)	175-350 bar (2500-5000 psi)	177 bar/turn (2600 psi/turn)
CP000007	CPLN-020-DPNA-SN-S08-N200	200 bar (2900 psi)	105-210 bar (1500-3000 psi)	80 bar/turn (1200 psi/turn)
CP000028	CPLN-020-DPNA-SN-S08-N100	100 bar (1400 psi)	35-140 bar (500-2000 psi)	49 bar/turn (700 psi/turn)
CP000027	CPLN-020-DPNA-SN-S08-N050	50 bar (700 psi)	10-70 bar (150-1000 psi)	26 bar/turn (350 psi/turn)

Revision A1

RELIEF VALVE

CPLN-020-DPNA

DIRECT ACTING

ATLANTIC Fluid Tech
WWW.SUMY.IR

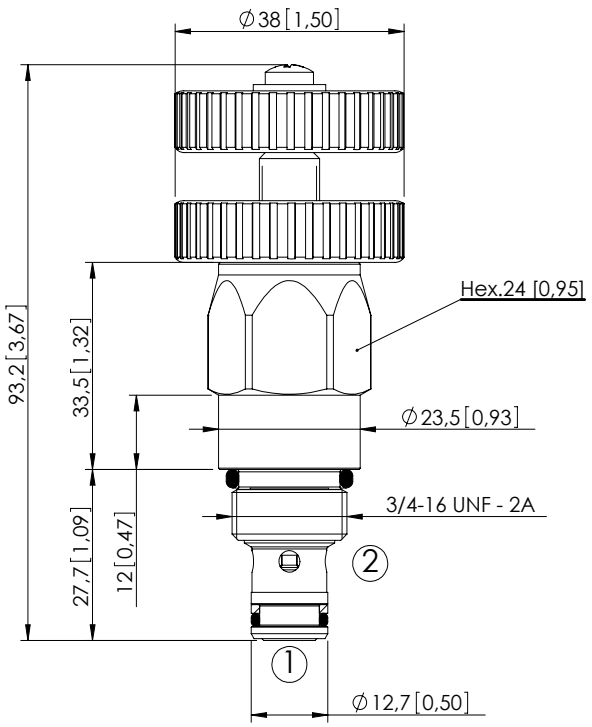

Dimensions: mm [inches]

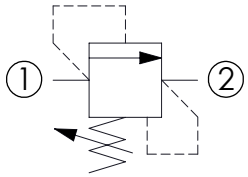

SPECIFICATIONS

Max. operating pressure:	350 bar (5000 psi)
Rated flow:	20 l/min (6 gpm)
Cavity:	SAE-08-2N
Weight:	0,18 kg (0,4 lbs)
Contamination class to ISO 4406:	See technical spec.
Seal kit:	RA700081
Installation torque:	45 - 50 Nm (33 - 37 ft-lb)
MTTFd:	150 - 1200 years: See technical spec.

NOTES

For other configurations/quick codes not available in this catalogue page please consult factory

CURVES

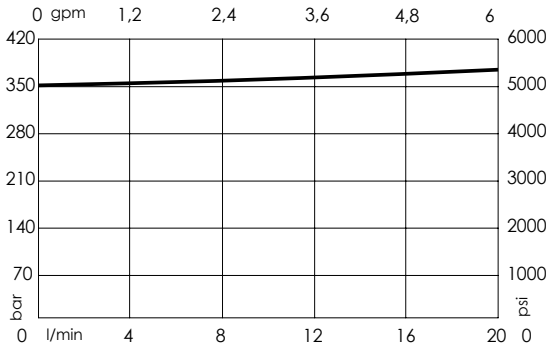

ORDERING CODES

Quick code	Description	Standard setting (cracking pressure)	Adjustment range	Pressure increase
CP000173	CPLN-020-DPNA-VS-S08-N350	350 bar (5000 psi)	20-350 bar (300-5000 psi)	56 bar/turn (800 psi/turn)

Revision A1

RELIEF VALVE

CPLN-XXX-DHNA

DIRECT ACTING
STABILIZED PISTON
HARDENED SEAT

ATLANTIC Fluid Tech
WWW.SUMY.IR

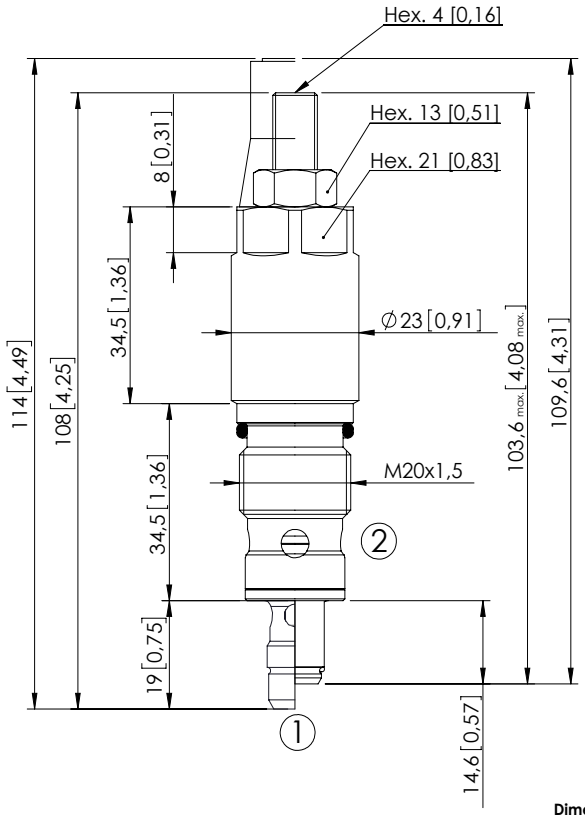

Dimensions: mm [inches]

With Filter

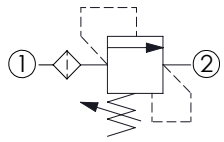

Without filter

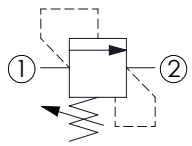

SPECIFICATIONS

Max. operating pressure:	500 bar (7200 psi)
Max. operating pressure on T:	350 bar (5000 psi)
Cavity:	VP000008
Weight:	0,17 kg (0,38 lbs)
Contamination class to ISO 4406:	See technical spec.
Seal kit:	RC700008
Installation torque:	40 - 45 Nm (29 - 33 ft-lb)
MTTFd:	150 - 1200 years: See technical spec.
Filtration:	300 micron

NOTES

For other configurations/quick codes not available in this catalogue page please consult factory

SEALING CAP

Ordering code:
AT000020

CURVES

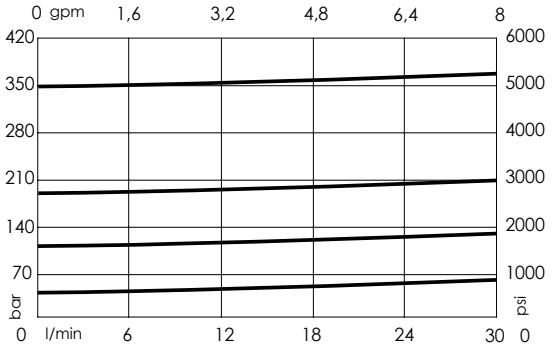

ORDERING CODES

Quick code	Description	Rated flow	Standard setting Q=5 l/min (1,3 gpm)	Adjustment range	Pressure increase	Option
CP000401	CPLN-023-DHNA-HF-008-N500	20 l/min (5 gpm)	350 bar (5000 psi)	150 - 500 bar (2200-7200 psi)	150 bar/turn (2200 psi/turn)	With Filter
CP000411	CPLN-030-DHNA-HF-008-N420	30 l/min (8 gpm)	350 bar (5000 psi)	250-420 bar (3600-6000 psi)	104 bar/turn (1500 psi/turn)	With Filter
CP000082	CPLN-030-DHNA-HN-008-N350	30 l/min (8 gpm)	350 bar (5000 psi)	100-350 bar (1400-5000 psi)	91 bar/turn (1300 psi/turn)	Without Filter
CP000083	CPLN-030-DHNA-HN-008-N200	30 l/min (8 gpm)	200 bar (2900 psi)	50-210 bar (700-3000 psi)	42 bar/turn (600 psi/turn)	Without Filter
CP000084	CPLN-030-DHNA-HN-008-N100	30 l/min (8 gpm)	100 bar (1400 bar)	30-100 bar (400-1400 psi)	20 bar/turn (300 psi/turn)	Without Filter
CP000085	CPLN-030-DHNA-HN-008-N050	30 l/min (8 gpm)	50 bar (700 psi)	10-50 bar (150-700 psi)	10 bar/turn (150 psi/turn)	Without Filter

Revision A1

RELIEF VALVE

CPLN-080-DPNA

DIRECT ACTING
STABILIZED PISTON

ATLANTIC Fluid Tech
WWW.SUMY.IR

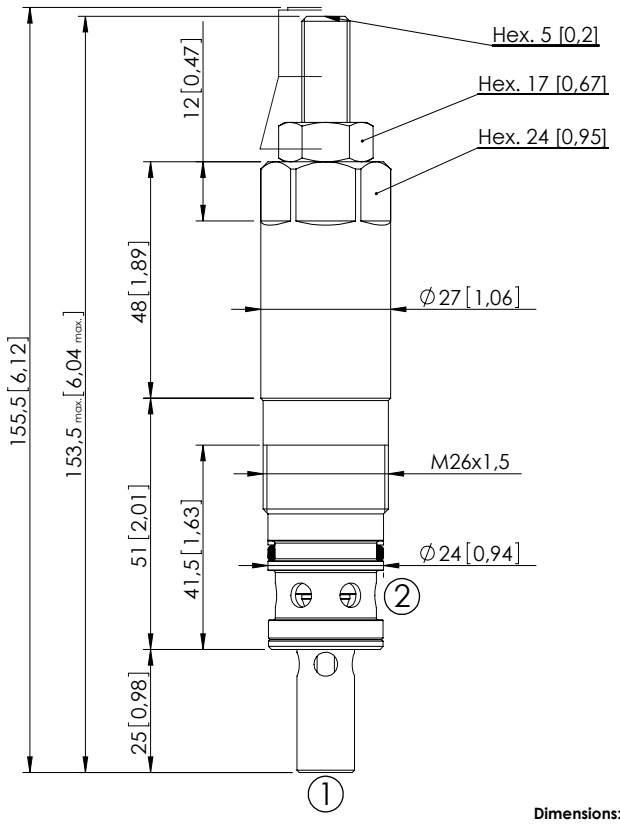

Dimensions: mm [inches]

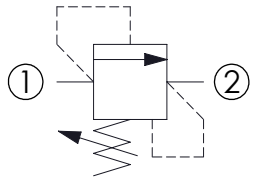

SPECIFICATIONS

Max. operating pressure:	420 bar (6000 psi)
Rated flow:	80 l/min (21 gpm)
Cavity:	VP000086
Weight:	0,34 kg (0,75 lbs)
Contamination class to ISO 4406:	See technical spec.
Seal kit:	RC700086
Installation torque:	80 - 95 Nm (59 - 70 ft-lb)
MTTFd:	150 - 1200 years: See technical spec.

NOTES

For other configurations/quick codes not available in this catalogue page please consult factory

SEALING CAP

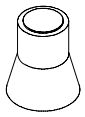

Ordering code:
AT000021

CURVES

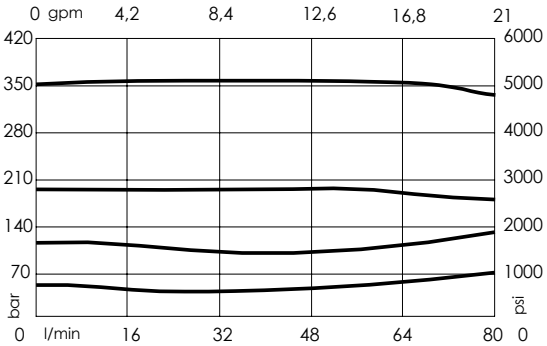

ORDERING CODES

Quick code	Description	Standard setting (cracking pressure)	Adjustment range	Pressure increase
CP000180	CPLN-080-DPNA-HN-086-N420	350 bar (5000 psi)	150-420 bar (2100-6000 psi)	53 bar/turn (750 psi/turn)
CP000026	CPLN-080-DPNA-HN-086-N350	350 bar (5000 psi)	100-350 bar (1400-5000 psi)	42 bar/turn (600 psi/turn)
CP000076	CPLN-080-DPNA-HN-086-N200	200 bar (2900 psi)	60-210 bar (900-3000 psi)	24 bar/turn (350 psi/turn)
CP000077	CPLN-080-DPNA-HN-086-N100	100 bar (1400 psi)	25-100 bar (400-1400 psi)	13 bar/turn (200 psi/turn)
CP000099	CPLN-080-DPNA-HN-086-N050	50 bar (700 psi)	5-50 bar (100-500 psi)	9 bar/turn (150 psi/turn)

Revision B1

RELIEF VALVE

CPLT-005-DPNA

DIRECT ACTING
WITH FILTER
COMPENSATED

ATLANTIC Fluid Tech
WWW.SUMY.IR

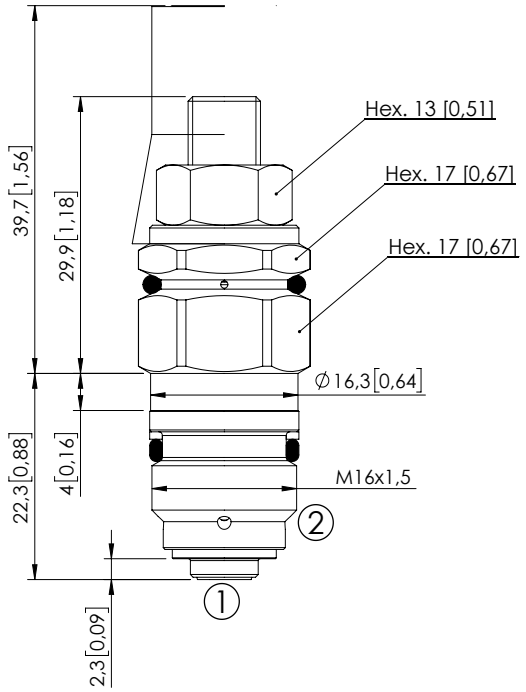

Dimensions: mm [inches]

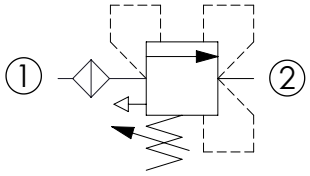

SPECIFICATIONS

Max. operating pressure:	460 bar (6700 psi)
Rated flow:	1,5 l/min (0,4 gpm)
Cavity:	VP000005
Weight:	0,06 kg (0,11 lbs)
Contamination class to ISO 4406:	See technical spec.
Seal kit:	RC700005
Installation torque:	27 - 33 Nm (20 - 24 ft-lb)
MTTFd:	150 - 1200 years: See technical spec.

NOTES

For other configurations/quick codes not available in this catalogue page please consult factory

SEALING CAP

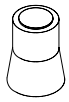

Ordering code:
AT000020

CURVES

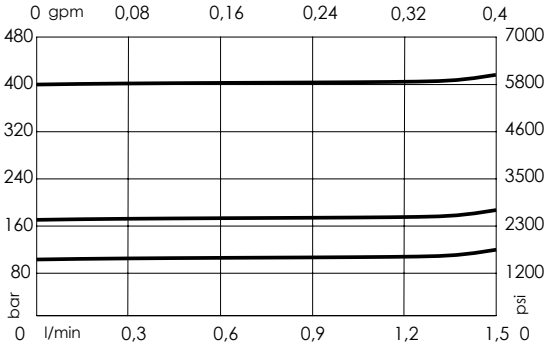

ORDERING CODES

Quick code	Description	Standard setting (Cracking Pressure)	Adjustment range	Pressure increase
CP000262	CPLT-005-DPNA-HF-005-N460	400 bar (5800 psi)	150-460 bar (2100-6700 psi)	296 bar/turn (4300 psi/turn)
CP000263	CPLT-005-DPNA-HF-005-N200	170 bar (2400 psi)	100-200 bar (1400-2900 psi)	93 bar/turn (1300 psi/turn)
CP000454	CPLT-005-DPNA-HF-005-N100	100 bar (1400 psi)	25-100 bar (350-1400 psi)	41 bar/turn (600 psi/turn)

Revision B1

RELIEF VALVE

CPLT-030-DHNA

DIRECT ACTING COMPENSATED STABILIZED PISTON HARDENED SEAT

ATLANTIC Fluid Tech
WWW.SUMY.IR

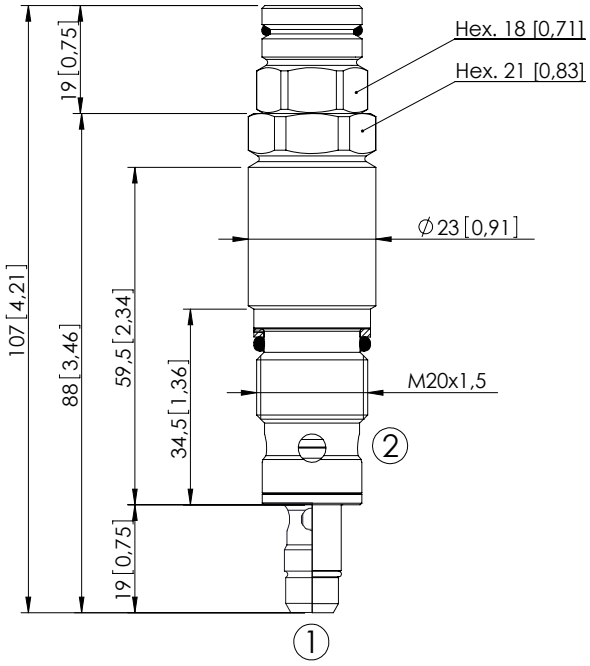

Dimensions: mm [inches]

With filter

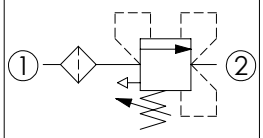

Without filter

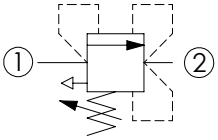

SPECIFICATIONS

Max. operating pressure:	420 bar (6000 psi)
Max. operating pressure on T:	350 bar (5000 psi)
Rated flow:	30 l/min (8 gpm)
Cavity:	VP000008
Weight:	0,2 kg (0,44 lbs)
Contamination class to ISO 4406:	See technical spec.
Seal kit:	RC700008
Installation torque:	45 - 50 Nm (33 - 37 ft-lb)
MTTFd:	150 - 1200 years: See technical spec.
Filtration:	300 micron

NOTES

For other configurations/quick codes not available in this catalogue page please consult factory

CURVES

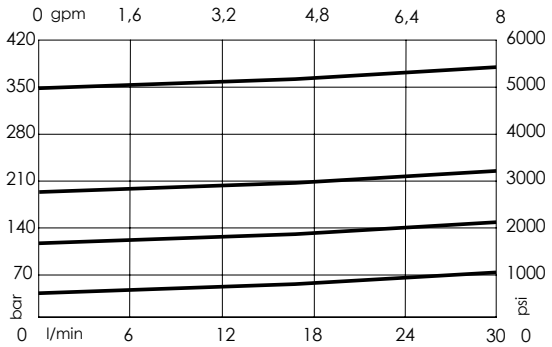

ORDERING CODES

Quick code	Description	Standard setting Q=5 l/min (1,3 gpm)	Adjustment range	Pressure increase	Option
CP000410	CPLT-030-DHNA-HF-008-N420	350 bar (5000 psi)	250-420 bar (3600-6000 psi)	104 bar/turn (1500 psi/turn)	With Filter
CP000095	CPLT-030-DHNA-HN-008-N350	350 bar (5000 psi)	100-350 bar (1400-5000 psi)	91 bar/turn (1300 psi/turn)	Without Filter
CP000096	CPLT-030-DHNA-HN-008-N200	200 bar (2900 psi)	50-210 bar (700-3000 psi)	42 bar/turn (600 psi/turn)	Without Filter
CP000097	CPLT-030-DHNA-HN-008-N100	100 bar (1400 psi)	30-100 bar (400-1400 psi)	20 bar/turn (300 psi/turn)	Without Filter
CP000098	CPLT-030-DHNA-HN-008-N050	50 bar (700 psi)	10-50 bar (150-700 psi)	10 bar/turn (150 psi/turn)	Without Filter

Revision A1

RELIEF VALVE

CPLV-080-DHNA

DIRECT ACTING
STABILIZED PISTON
CHAMBER VENTED

ATLANTIC Fluid Tech
WWW.SUMY.IR

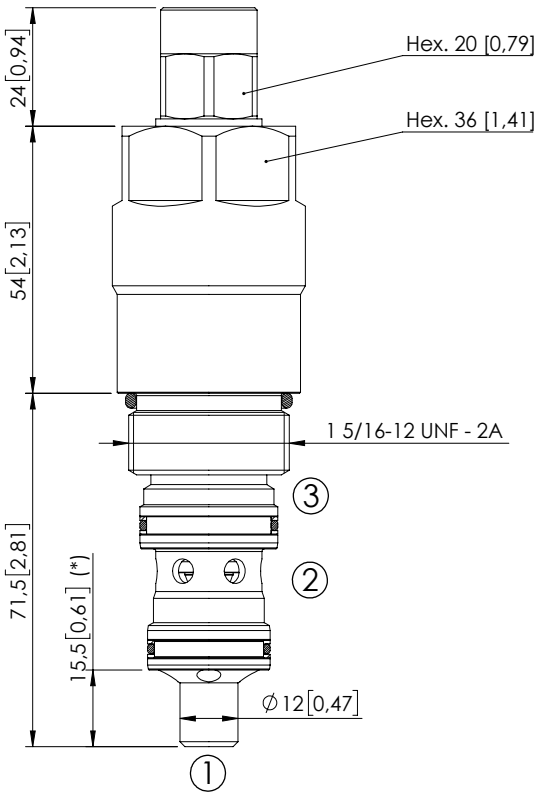

Dimensions: mm [inches]

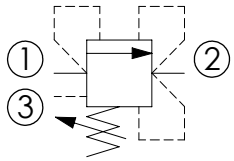

SPECIFICATIONS

Max. operating pressure:	350 bar (5000 psi)
Rated flow:	80 l/min (21 gpm)
Cavity:	SAE-16-3C
Weight:	0,75 kg (1,65 lbs)
Contamination class to ISO 4406:	See technical spec.
Seal kit:	RB700089
Installation torque:	118 - 132 Nm (87 - 97 ft-lb)
MTTFd:	150 - 1200 years: See technical spec.

NOTES

(*) The cartridge exceed overall dimension of the standard cavity into port 1.

For other configurations/quick codes not available in this catalogue page please consult factory

CURVES

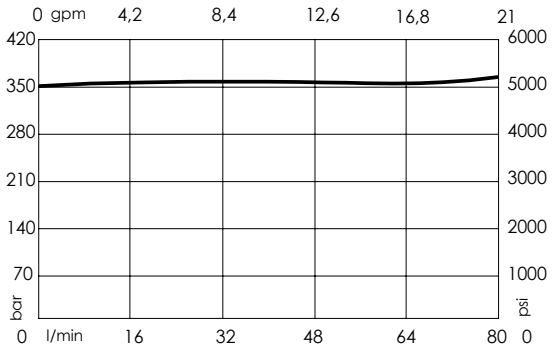

ORDERING CODES

Quick code	Description	Standard setting (cracking pressure)	Adjustment range	Pressure increase
CP000171	CPLV-080-DHNA-HN-S16-V420	400 bar (5700 psi)	150-420 bar (2100-6000 psi)	53 bar/turn (750 psi/turn)
CP000513	CPLV-080-DHNA-HN-S16-V350	350 bar (5000 psi)	100-350 bar (1400-5000 psi)	42 bar/turn (600 psi/turn)
CP000501	CPLV-080-DHNA-HN-S16-V200	200 bar (2900 psi)	60-210 bar (900-3000 psi)	24 bar/turn (350 psi/turn)
CP000514	CPLV-080-DHNA-HN-S16-V100	100 bar (1400 psi)	25-100 bar (400-1400 psi)	13 bar/turn (200 psi/turn)
CP000515	CPLV-080-DHNA-HN-S16-V050	50 bar (700 psi)	5-50 bar (100-700 psi)	9 bar/turn (150 psi/turn)

Revision A1

RELIEF VALVE

CPLN-040-DHGD

DIFFERENTIAL AREA POPPET TYPE

ATLANTIC Fluid Tech
WWW.SUMY.IR

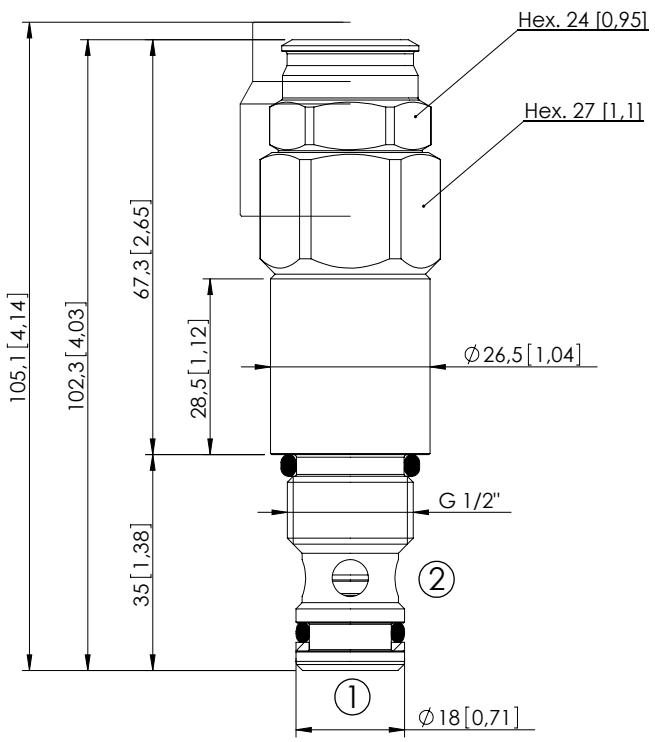

Dimensions: mm [inches]

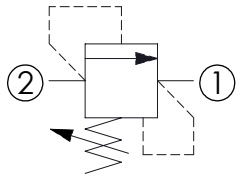

SPECIFICATIONS

Max. operating pressure:	350 bar (5000 psi)
Rated flow:	40 l/min (11 gpm)
Cavity:	VP000080
Weight:	0,31 kg (0,68 lbs)
Contamination class to ISO 4406:	See technical spec.
Seal kit:	RC900080
Installation torque:	95 - 105 Nm (70 - 77 ft-lb)
MTTFd:	150 - 1200 years: See technical spec.

NOTES

For other configurations/quick codes not available in this catalogue page please consult factory

SEALING CAP

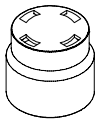

Ordering code:
PT000258

CURVES

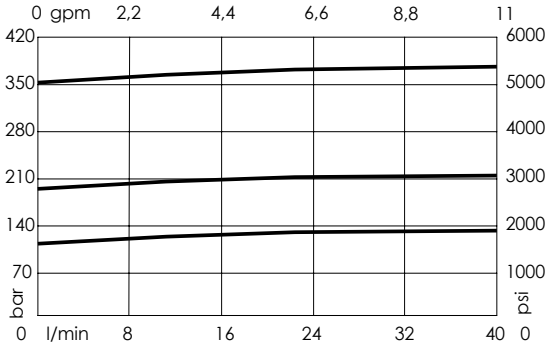

ORDERING CODES

Quick code	Description	Standard setting (cracking pressure)	Adjustment range	Pressure increase
CP000036	CPLN-040-DHGD-HN-080-N350	350 bar (5000 psi)	100-350 bar (1400-5000 psi)	119 bar/turn (1700 psi/turn)
CP000088	CPLN-040-DHGD-HN-080-N200	200 bar (2900 psi)	50-210 bar (700-3000 psi)	63 bar/turn (900 psi/turn)
CP000223	CPLN-040-DHGD-HN-080-N100	100 bar (1400 psi)	30-100 bar (400-1400 psi)	30 bar/turn (400 psi/turn)

Revision B1

RELIEF VALVE

CPLN-090-DHGA

DIRECT ACTING STABILIZED PISTON

ATLANTIC Fluid Tech
WWW.SUMY.IR

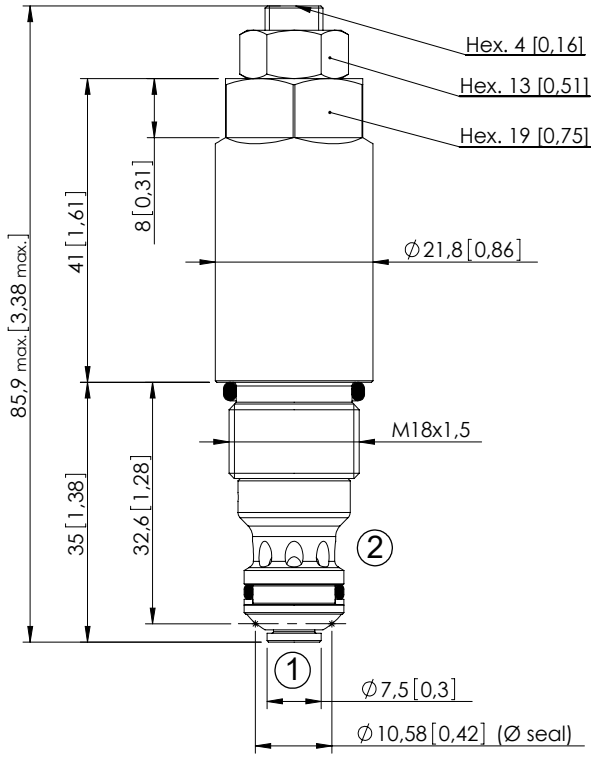

Dimensions: mm [inches]

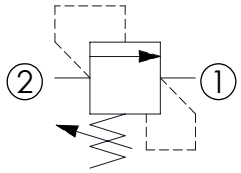

SPECIFICATIONS

Max. operating pressure:	380 bar (5000 psi)
Rated flow:	90 l/min (24 gpm)
Cavity:	VP000249
Weight:	0,15 kg (0,33 lbs)
Contamination class to ISO 4406:	See technical spec.
Seal kit:	RC900249
Installation torque:	45 - 50 Nm (33 - 37 ft-lb)
MTTFd:	150 - 1200 years: See technical spec.

NOTES

For other configurations/quick codes not available in this catalogue page please consult factory

CURVES

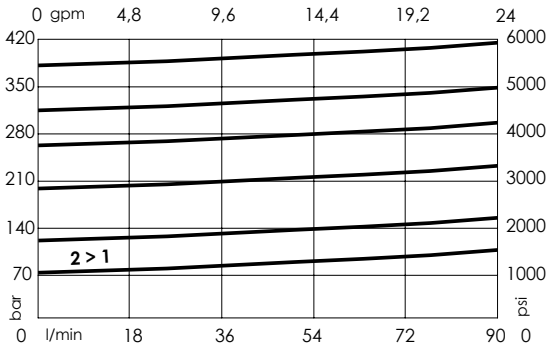

ORDERING CODES

Quick code	Description	Standard setting (cracking pressure)	Adjustment range	Pressure increase
CP000105	CPLN-090-DHGA-HN-249-N380	380 bar (5400 psi)	320-380 bar (4600-5500 psi)	101 bar/turn (1500 psi/turn)
CP000101	CPLN-090-DHGA-HN-249-N320	320 bar (4500 psi)	270-320 bar (3900-4600 psi)	67 bar/turn (950 psi/turn)
CP000104	CPLN-090-DHGA-HN-249-N270	270 bar (3800 psi)	200-270 bar (2900-3900 psi)	44 bar/turn (650 psi/turn)
CP000103	CPLN-090-DHGA-HN-249-N200	200 bar (2900 psi)	120-200 bar (1700-2900) psi	30 bar/turn (400 psi/turn)
CP000102	CPLN-090-DHGA-HN-249-N120	120 bar (1700 psi)	70-120 bar (1000-1700 psi)	18 bar/turn (250 psi/turn)
CP000120	CPLN-090-DHGA-HN-249-N070	70 bar (1000 psi)	10-70 bar (150-1000 psi)	8 bar/turn (100 psi/turn)

Revision C1

RELIEF VALVE

CPLN-120-PSNA

PILOT OPERATED SPOOL TYPE

ATLANTIC Fluid Tech
WWW.SUMY.IR

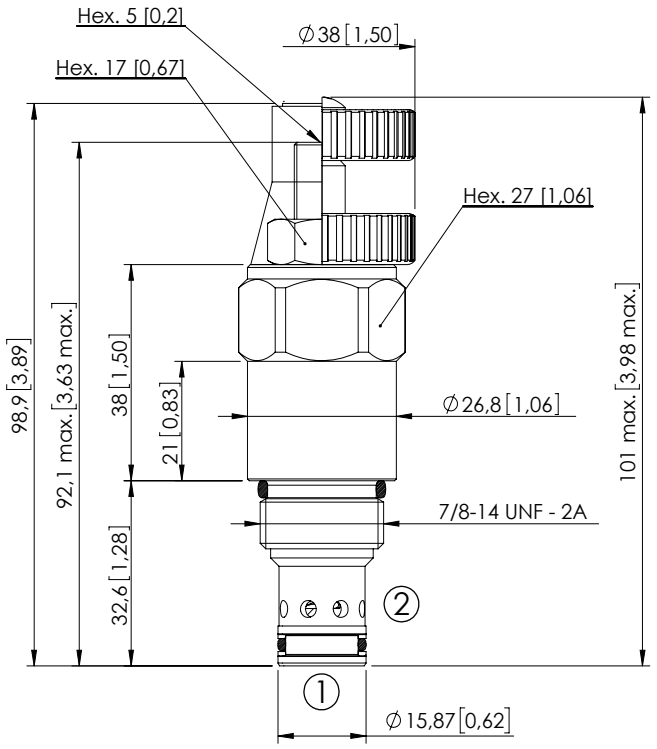

Dimensions: mm [inches]

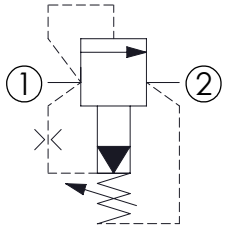

SPECIFICATIONS

Max. operating pressure:	350 bar (5000 psi)
Rated flow:	120 l/min (32 gpm)
Cavity:	SAE-10-2N
Weight:	0,24 kg (0,53 lbs)
Contamination class to ISO 4406:	See technical spec.
Seal kit:	RB700082
Installation torque:	55 - 62 Nm (40 - 46 ft-lb)
MTTFd:	150 - 1200 years: See technical spec.
Leakage:	200 cm³/min @200 bar 12,2 in³/min @ 2800 psi

NOTES

For other configurations/quick codes not available in this catalogue page please consult factory

OPTIONS

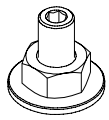

Adjustment with Screw

Adjustment with Handknob

SEALING CAP

Ordering code: AT000022

CURVES

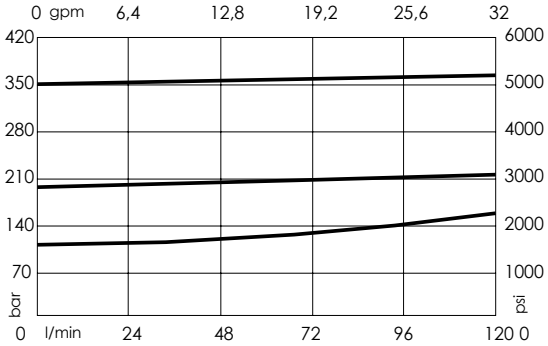

ORDERING CODES

Quick code	Description	Standard setting Q=5 l/min (1,3 gpm)	Adjustment range	Pressure increase	Option
CP000009	CPLN-120-PSNA-HN-S10-N350	350 bar (5000 psi)	140-350 bar (2000-5000 psi)	114 bar/turn (1700 psi/turn)	Adjustment with Screw
CP000060	CPLN-120-PSNA-HN-S10-N200	200 bar (2900 psi)	70-210 bar (1000-3000 psi)	69 bar/turn (1000 psi/turn)	Adjustment with Screw
CP000059	CPLN-120-PSNA-HN-S10-N100	100 bar (1400 psi)	35-120 bar (500-1700 psi)	37 bar/turn (550 psi/turn)	Adjustment with Screw
CP000064	CPLN-120-PSNA-VN-S10-N350	350 bar (5000 psi)	140-350 bar (2000-5000 psi)	114 bar/turn (1700 psi/turn)	Adjustment with Handknob
CP000065	CPLN-120-PSNA-VN-S10-N200	200 bar (2900 psi)	70-210 bar (1000-3000 psi)	69 bar/turn (1000 psi/turn)	Adjustment with Handknob
CP000066	CPLN-120-PSNA-VN-S10-N100	100 bar (1400 psi)	35-120 bar (500-1700 psi)	37 bar/turn (550 psi/turn)	Adjustment with Handknob

Revision B1

RELIEF VALVE

CPLN-300-PSNA

PILOT OPERATED SPOOL TYPE

ATLANTIC Fluid Tech
WWW.SUMY.IR

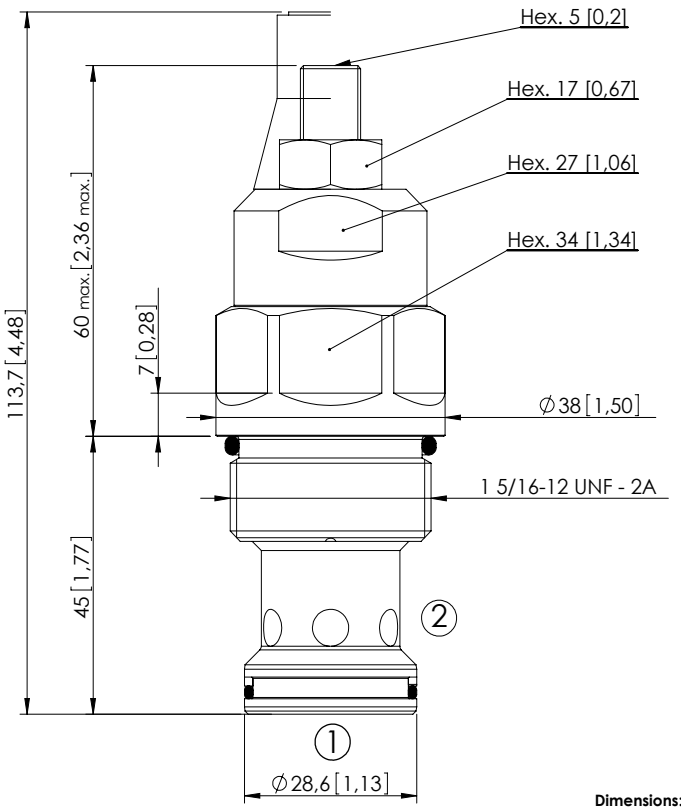

Dimensions: mm [inches]

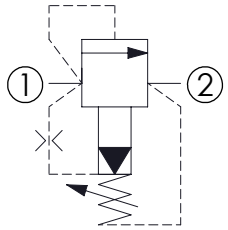

SPECIFICATIONS

Max. operating pressure:	350 bar (5000 psi)
Rated flow:	300 l/min (79 gpm)
Cavity:	SAE-16-2N
Weight:	0,5 kg (1,1 lbs)
Contamination class to ISO 4406:	See technical spec.
Seal kit:	RA700084
Installation torque:	150 - 180 Nm (110 - 133 ft-lb)
MTTFd:	150 - 1200 years: See technical spec.
Leakage:	350 cm³/min @200 bar 21,4 in³/min @2800 psi

NOTES

For other configurations/quick codes not available in this catalogue page please consult factory

SEALING CAP

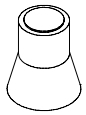

Ordering code:
AT000022

CURVES

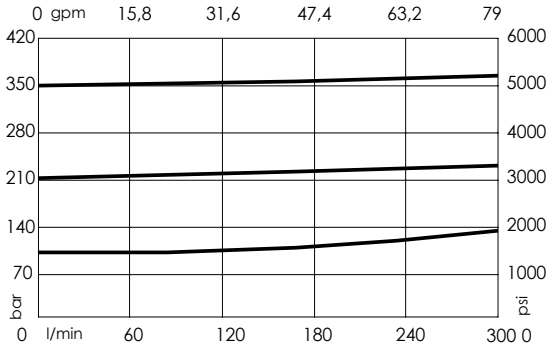

ORDERING CODES

Quick code	Description	Standard setting (cracking pressure)	Adjustment range	Pressure increase
CP000188	CPLN-300-PSNA-HN-S16-N350	350 bar (5000 psi)	140-350 bar (2000-5000 psi)	114 bar/turn (1600 psi/turn)
CP000177	CPLN-300-PSNA-HN-S16-N200	200 bar (2900 psi)	70-210 bar (1000-3000 psi)	69 bar/turn (950 psi/turn)
CP000178	CPLN-300-PSNA-HN-S16-N100	100 bar (1400 psi)	35-120 bar (500-1700 psi)	37 bar/turn (500 psi/turn)

Revision B1

RELIEF VALVE

CPLN-500-PHNA

PILOTED OPERATED
SPOOL TYPE

ATLANTIC Fluid Tech
WWW.SUMY.IR

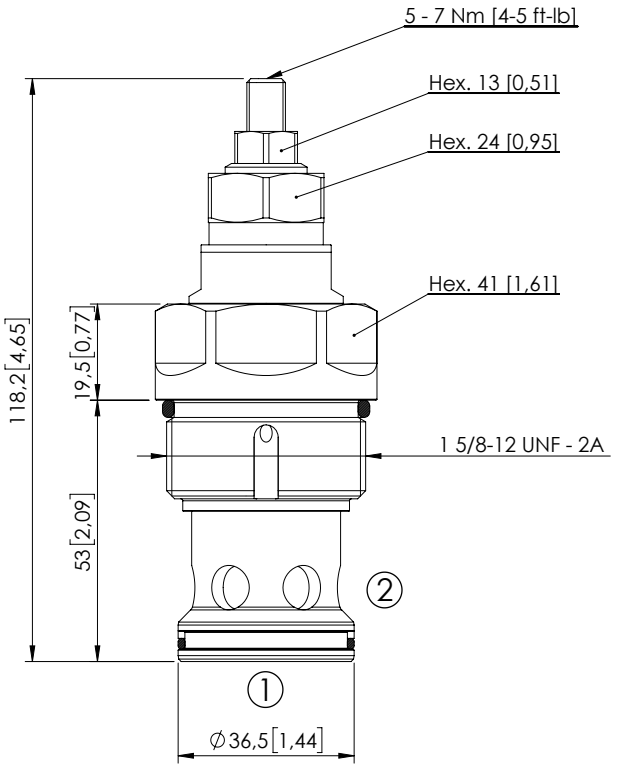

Dimensions: mm [inches]

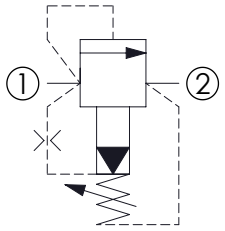

SPECIFICATIONS

Max. operating pressure:	350 bar (5000 psi)
Rated flow:	500 l/min (132 gpm)
Cavity:	SAE-20-2N
Weight:	0,7 kg (1,54 lbs)
Contamination class to ISO 4406:	See technical spec.
Seal kit:	RA900085
Installation torque:	230 - 250 Nm (170 - 184 ft-lb)
MTTFd:	150 - 1200 years: See technical spec.
Max. int. leakage:	400 cm³/min (@46 cSt) 24,4 in³/min (@46 cSt)

NOTES

For other configurations/quick codes not available in this catalogue page please consult factory

SEALING CAP

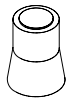

Ordering code:
AT000020

CURVES

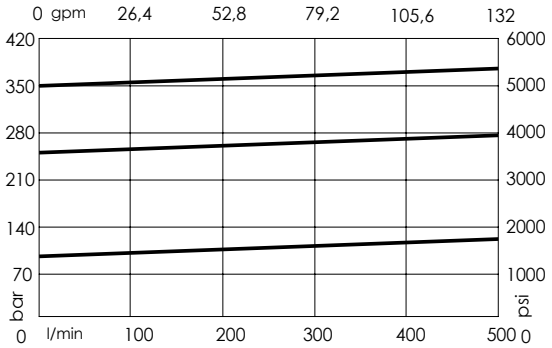

ORDERING CODES

Quick code	Description	Standard setting (cracking pressure)	Adjustment range	Pressure increase
CP000407	CPLN-500-PHNA-SN-S20-N350	350 bar (5000 psi)	140-350 bar (2000-5000 psi)	142 bar/turn (2000 psi/turn)
CP000408	CPLN-500-PHNA-SN-S20-N200	200 bar (2900 psi)	90-210 bar (1300-3000 psi)	87 bar/turn (1200 psi/turn)
CP000409	CPLN-500-PHNA-SN-S20-N100	100 bar (1400 psi)	35-110 bar (500-1600 psi)	47 bar/turn (650 psi/turn)

Revision B1

RELIEF VALVE

CPLT-120-PSNA

PILOT OPERATED
SPOOL TYPE
COMPENSATED

ATLANTIC Fluid Tech
WWW.SUMY.IR

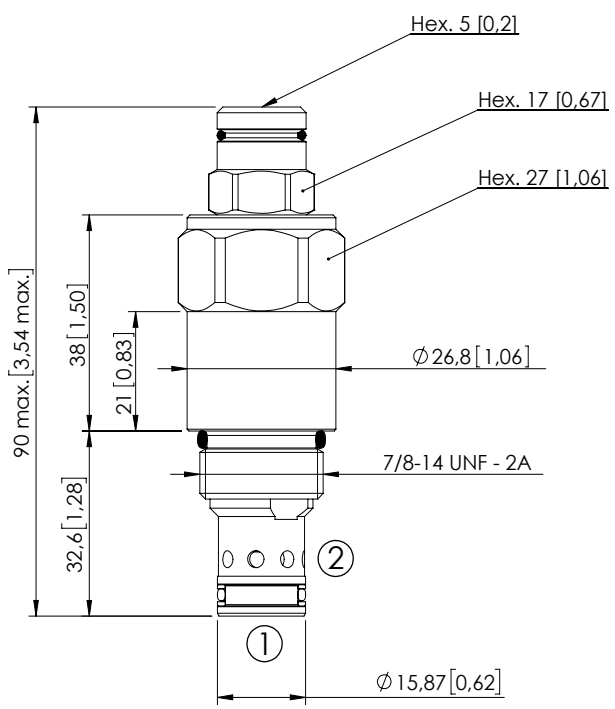

Dimensions: mm [inches]

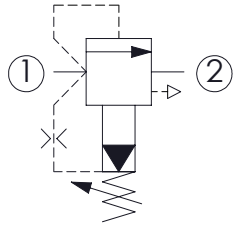

SPECIFICATIONS

Max. operating pressure:	350 bar (5000 psi)
Rated flow:	120 l/min (32 gpm)
Cavity:	SAE-10-2N
Weight:	0,25 kg (0,55 lbs)
Contamination class to ISO 4406:	See technical spec.
Seal kit:	RB700082
Installation torque:	55 - 62 Nm (42 - 46 ft-lb)
MTTFd:	150 - 1200 years: See technical spec.
Leakage:	200 cm³/min @ 200 bar 12,2 in³/min @ 2800 psi

NOTES

For other configurations/quick codes not available in this catalogue page please consult factory

CURVES

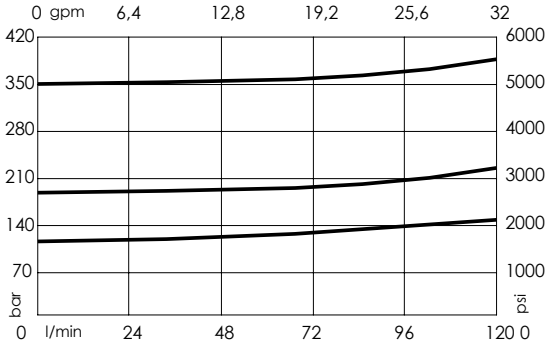

ORDERING CODES

Quick code	Description	Standard setting (cracking pressure)	Adjustment range	Pressure increase
CP000070	CPLT-120-PSNA-HN-S10-N350	350 bar (5000 psi)	140-350 bar (2000-5000 psi)	114 bar/turn (1600 psi/turn)
CP000071	CPLT-120-PSNA-HN-S10-N200	200 bar (2900 psi)	70-210 bar (1000-3000 psi)	69 bar/turn (950 psi/turn)
CP000072	CPLT-120-PSNA-HN-S10-N100	100 bar (1400 psi)	35-120 bar (500-1700 psi)	37 bar/turn (500 psi/turn)

Revision C1

RELIEF VALVE

CPLV-120-PSNA

PILOT OPERATED
SPOOL TYPE
SEPARATE TANK LINE

ATLANTIC Fluid Tech
WWW.SUMY.IR

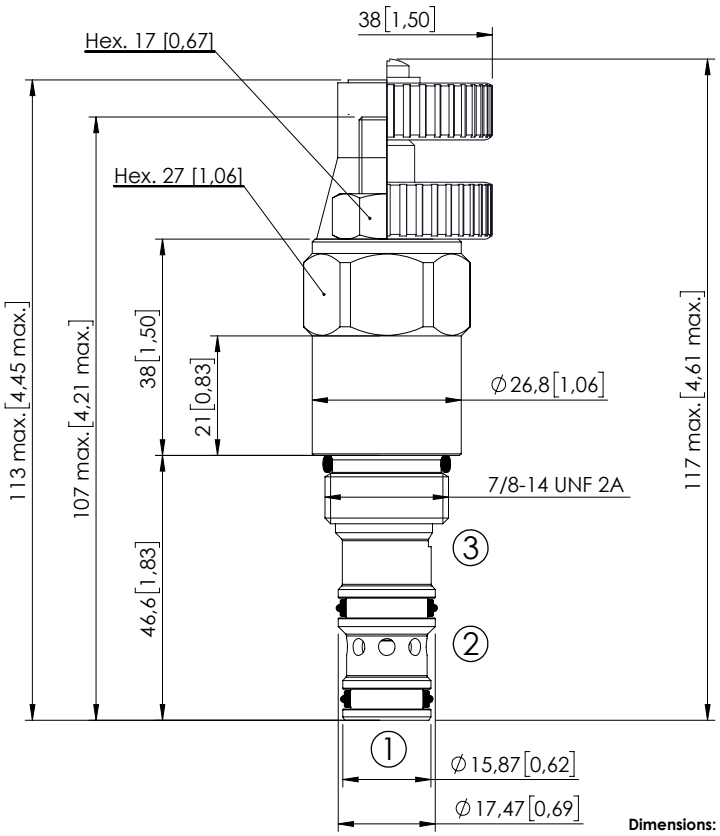

Dimensions: mm [inches]

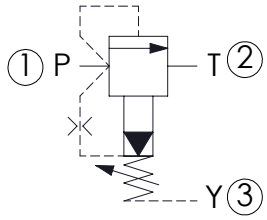

SPECIFICATIONS

Max. operating pressure:	350 bar (5000 psi)
Rated flow:	120 l/min (32 gpm)
Cavity:	SAE-10-3N
Weight:	0,26 kg (0,57 lbs)
Contamination class to ISO 4406:	See technical spec.
Seal kit:	RB700092
Installation torque:	55 - 62 Nm (41 - 46 ft-lb)
MTTFd:	150 - 1200 years: See technical spec.
Leakage (1>2):	200 cm³/min @ 200 bar 12,2 in³/min @ 2800 psi

NOTES

For other configurations/quick codes not available in this catalogue page please consult factory

OPTIONS

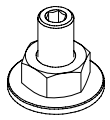

Adjustment with Screw

Adjustment with Handknob

SEALING CAP

Ordering code: AT000022

CURVES

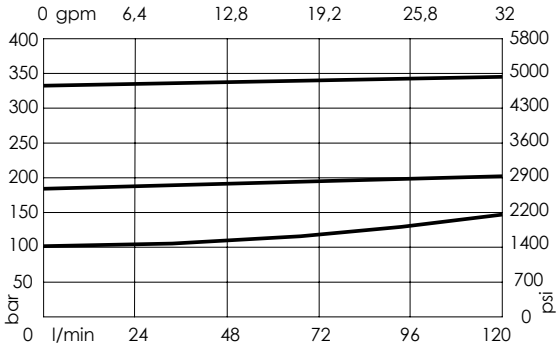

ORDERING CODES

Quick code	Description	Standard setting Q=5 l/min (1,3 gpm)	Adjustment range	Pressure increase	Option
CP000228	CPLV-120-PSNA-HN-S10-N350	350 bar (5000 psi)	140-350 bar (2000-5000 psi)	114 bar/turn (1700 psi/turn)	Adjustment with Screw
CP000427	CPLV-120-PSNA-HN-S10-N200	200 bar (2900 psi)	70-210 bar (1000-3000 psi)	69 bar/turn (1000 psi/turn)	Adjustment with Screw
CP000428	CPLV-120-PSNA-HN-S10-N100	100 bar (1400 psi)	35-120 bar (500-1700 psi)	37 bar/turn (550 psi/turn)	Adjustment with Screw
CP000429	CPLV-120-PSNA-VN-S10-N350	350 bar (5000 psi)	140-350 bar (2000-5000 psi)	114 bar/turn (1700 psi/turn)	Adjustment with Handknob
CP000430	CPLV-120-PSNA-VN-S10-N200	200 bar (2900 psi)	70-210 bar (1000-3000 psi)	69 bar/turn (1000 psi/turn)	Adjustment with Handknob
CP000431	CPLV-120-PSNA-VN-S10-N100	100 bar (1400 psi)	35-120 bar (500-1700 psi)	37 bar/turn (550 psi/turn)	Adjustment with Handknob

Revision A1

ATLANTIC
Fluid Tech
WWW.SUMY.IR

WWW.SUMY.IR

SECTION 2

Pressure Reducing Valves

SECTION 2

PRESSURE REDUCING VALVES

ATLANTIC Fluid Tech
WWW.SUMY.IR

Hydraulic scheme	Valve description	Valve type	Rated flow l/min (gpm)	Max. pressure bar (psi)	Installation	Main port size or cavity type	Page
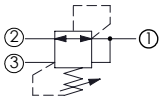	CPRL-007-DNNR	Direct acting, reducing and relieving	5 (1,3)	350 (5000)	Cartridge	VP000016	2.01.**010**
	CPRL-030-DNNR	Direct acting, reducing and relieving	30 (8)	350 (5000)	Cartridge	SAE-10-3N	2.01.**020**
	CPRL-030-DNSR	Direct acting, reducing and relieving	30 (8)	350 (5000)	Cartridge	SAE-10-3N	2.01.**030**
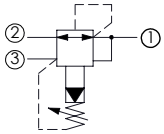	CPRL-060-PNNR	Pilot operated, reducing and relieving	60 (16)	350 (5000)	Cartridge	SAE-10-3N	2.02.**040**
	CPRL-140-PNNR	Pilot operated, reducing and relieving	140 (37)	350 (5000)	Cartridge	SAE-12-3N	2.02.**050**
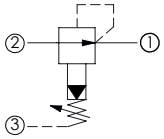	CPRR-060-PNNR	Pilot operated, reducing	60 (16)	350 (5000)	Cartridge	SAE-10-3N	2.03.**060**
	CPRR-140-PNNR	Pilot operated, reducing	140 (37)	350 (5000)	Cartridge	SAE-12-3N	2.03.**070**

PRESSURE REDUCING AND RELIEVING

CPRL-007-DNNR

DIRECT ACTING
SPOOL TYPE

ATLANTIC Fluid Tech
WWW.SUMY.IR

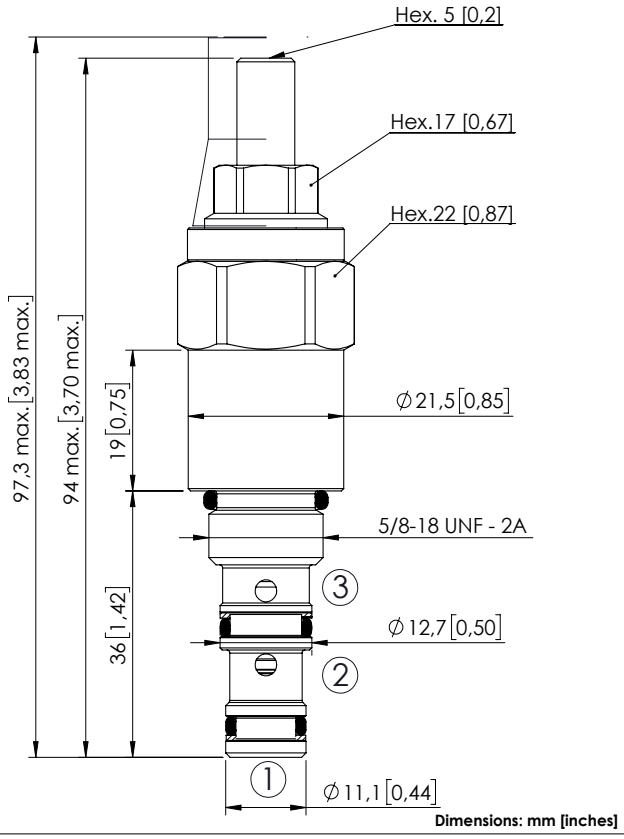

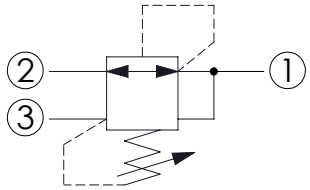

SPECIFICATIONS

Max. operating pressure:	350 bar (5000 psi)
Rated flow:	5 l/min (1,3 gpm)
Cavity:	VP000016
Weight:	0,14 kg (0,31 lbs)
Contamination class to ISO 4406:	See technical spec.
Seal kit:	RC700016
Installation torque:	25 - 30 Nm (18 - 22 ft-lb)
MTTFd:	150 - 1200 years: See technical spec.
Leakage:	35 cm³/min @ 50 bar 2,14 in³/min @ 700 psi

NOTES

For other configurations/quick codes not available in this catalogue page please consult factory

SEALING CAP

Ordering code:
AT000020

CURVES

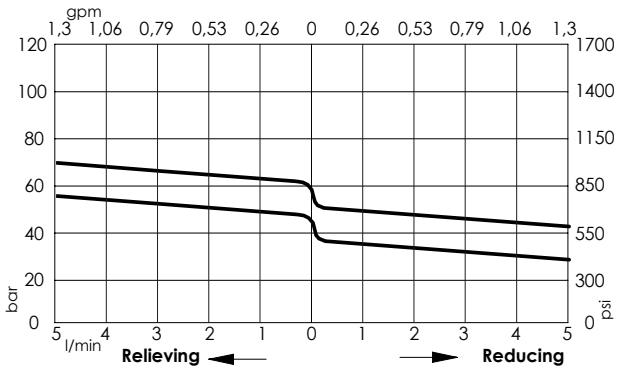

ORDERING CODES

Quick code	Description	Standard setting	Adjustment range	Pressure increase	
CR000001	CPRL-007-DNNR-HN-016-N060	40 bar (600 psi)	10-60 bar (150-850 psi)	6 bar/turn (100 psi/turn)	
CR000025	CPRL-007-DNNR-HN-016-N085	60 bar (850 psi)	25-85 bar (350-1200 psi)	9 bar/turn (150 psi/turn)	

Revision D

PRESSURE REDUCING AND RELIEVING

CPRL-030-DNNR

DIRECT ACTING
SPOOL TYPE

ATLANTIC Fluid Tech
WWW.SUMY.IR

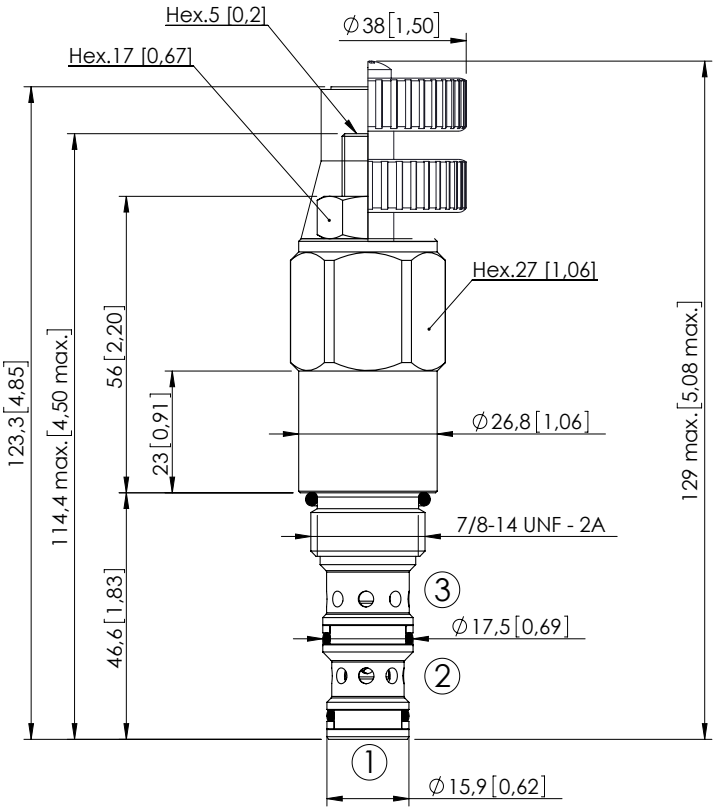

Dimensions: mm [inches]

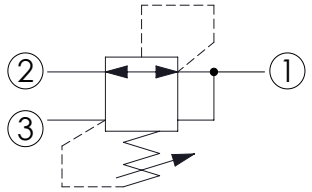

SPECIFICATIONS

Max. operating pressure:	350 bar (5000 psi)
Rated flow:	30 l/min (8 gpm)
Cavity:	SAE-10-3N
Weight:	0.28 kg (0,62 lbs)
Contamination class to ISO 4406:	See technical spec.
Seal kit:	RA700092
Installation torque:	55 - 62 Nm (41 - 46 ft-lb)
MTTFd:	150 - 1200 years: See technical spec.
Leakage:	50 cm³/min @ 50 bar 3,05 in³/min @ 700 psi

NOTES

For other configurations/quick codes not available in this catalogue page please consult factory

OPTIONS

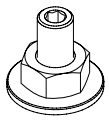

Adjustment with Screw

Adjustment with Handknob

SEALING CAP

Ordering code:
AT000022

CURVES

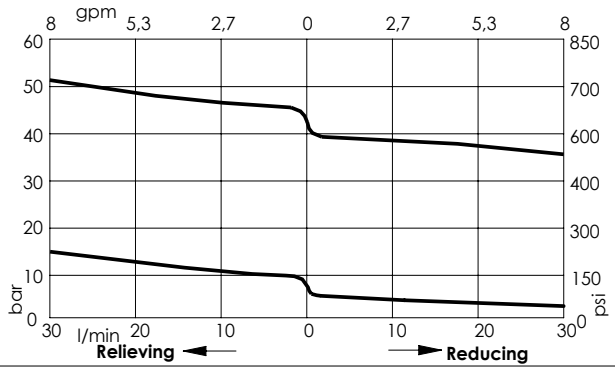

ORDERING CODES

Quick code	Description	Standard setting	Adjustment range	Pressure increase	Options
CR000002	CPRL-030-DNNR-HN-S10-N050	35 bar (500 psi)	10-50 bar (150-750 psi)	7 bar/turn (100 psi/turn)	Adjustment with Screw
CR000008	CPRL-030-DNNR-VN-S10-N050	35 bar (500 psi)	10-50 bar (150-750 psi)	7 bar/turn (100 psi/turn)	Adjustment with Handknob
CR000011	CPRL-030-DNNR-HN-S10-N015	5 bar (75 psi)	1.5-15 bar (25-200 psi)	1 bar/turn (15 psi/turn)	Adjustment with Screw
CR000012	CPRL-030-DNNR-VN-S10-N015	5 bar (75 psi)	1.5-15 bar (25-200 psi)	1 bar/turn (15 psi/turn)	Adjustment with Handknob

Revision A1

PRESSURE REDUCING AND RELIEVING

CPRL-030-DNSR

DIRECT ACTING
SPOOL TYPE
WITH DAMPING

ATLANTIC Fluid Tech
WWW.SUMY.IR

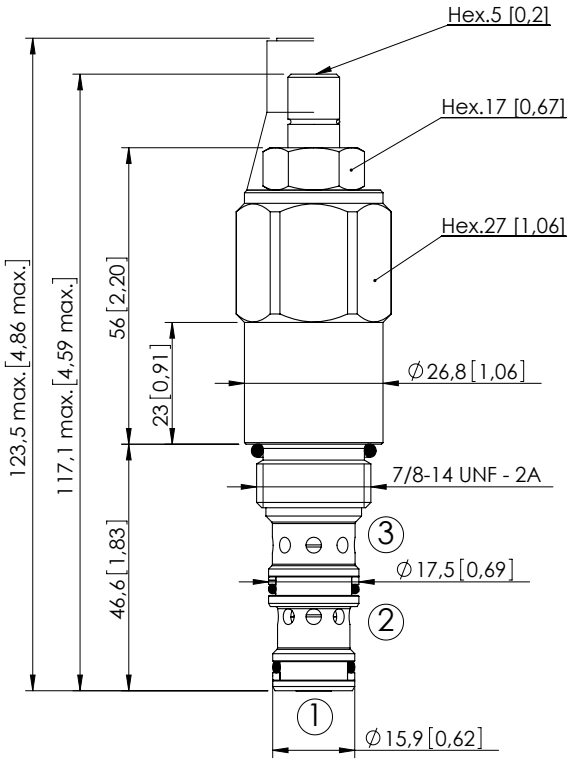

Dimensions: mm [inches]

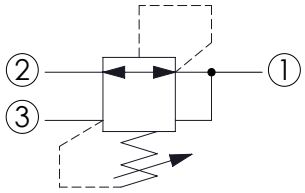

SPECIFICATIONS

Max. operating pressure:	350 bar (5000 psi)
Rated flow:	30 l/min (8 gpm)
Cavity:	SAE-10-3N
Weight:	0.29 kg (0,64 lbs)
Contamination class to ISO 4406:	See technical spec.
Seal kit:	RA700092
Installation torque:	55 - 62 Nm (41 - 46 ft-lb)
MTTFd:	150 - 1200 years: See technical spec.
Leakage:	50 cm³/min @ 50 bar 3,05 in³/min @ 700 psi

NOTES

For other configurations/quick codes not available in this catalogue page please consult factory

OPTIONS

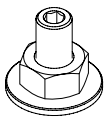

Adjustment with Screw

SEALING CAP

Ordering code:
AT000021

CURVES

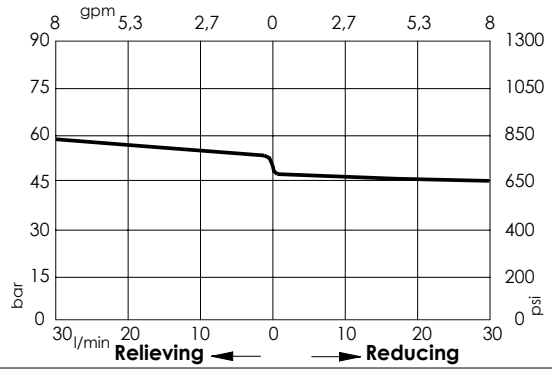

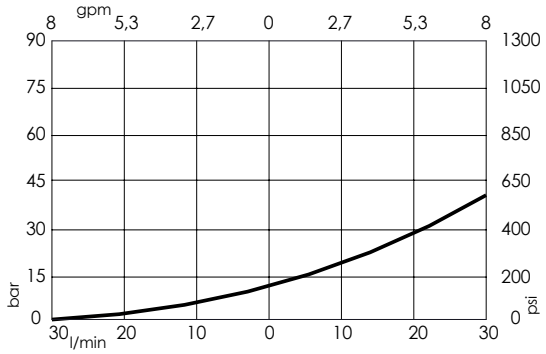

ORDERING CODES

Quick code	Description	Standard setting	Adjustment range	Pressure increase	Options
CR000038	CPRL-030-DNSR-HN-S10-N080	50 bar (700 psi)	20-75 bar (300-1100 psi)	11 bar/turn (150 psi/turn)	Adjustment with Screw
CR000056	CPRL-030-DNSR-HN-S10-N040	20 bar (300 psi)	10-35 bar (150-500 psi)	5,3 bar/turn (75 psi/turn)	Adjustment with Screw

Revision C1

PRESSURE REDUCING AND RELIEVING

CPRL-060-PNNR

PILOT OPERATED
SPOOL TYPE

ATLANTIC Fluid Tech
WWW.SUMY.IR

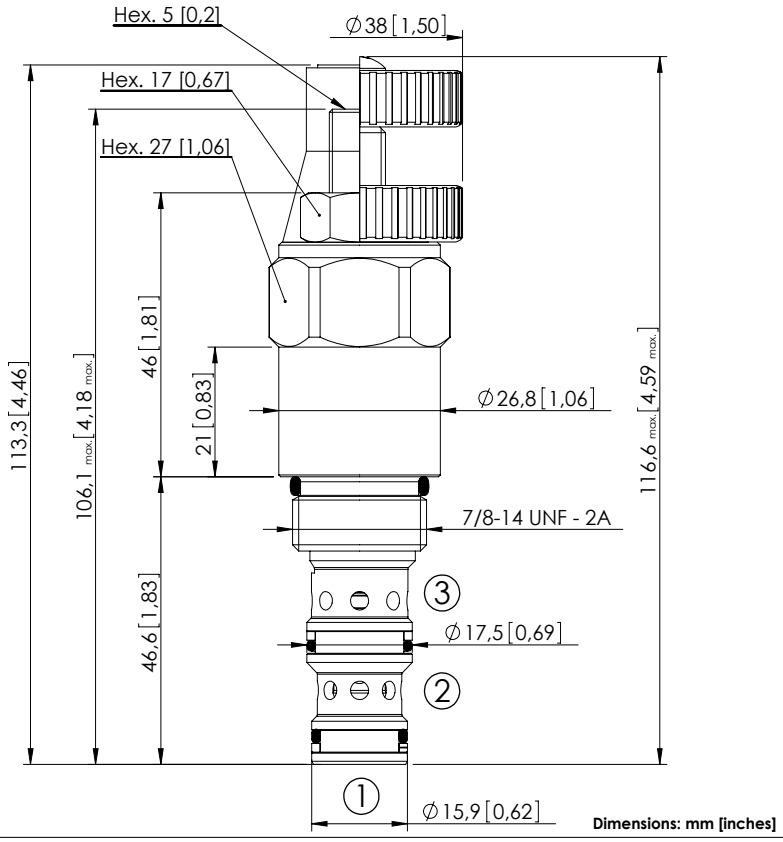

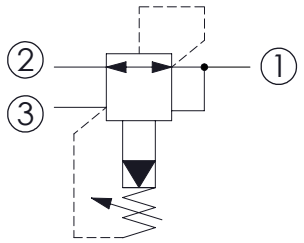

SPECIFICATIONS

Max. operating pressure:	350 bar (5000 psi)
Rated flow:	60 l/min (16 gpm)
Cavity:	SAE-10-3N
Weight:	0,26 kg (0,57 lbs)
Contamination class to ISO 4406:	See technical spec.
Seal kit:	RA700092
Installation torque:	55 - 62 Nm (41 - 46 ft-lb)
MTTFd:	150 - 1200 years: See technical spec.

NOTES

For other configurations/quick codes not available in this catalogue page please consult factory

OPTIONS

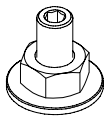

Adjustment with Screw

Adjustment with Handknob

SEALING CAP

Ordering code: AT000022

CURVES

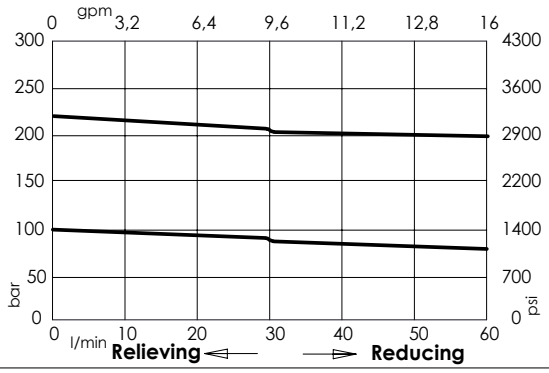

ORDERING CODES

Quick code	Description	Standard setting	Adjustment range	Pressure increase	Options
CR000006	CPRL-060-PNNR-HN-S10-N300	200 bar (2900 psi)	70-350 bar (1000-5000 psi)	114 bar/turn (1600 psi/turn)	Adjustment with Screw
CR000007	CPRL-060-PNNR-VN-S10-N300	200 bar (2900 psi)	70-350 bar (1000-5000 psi)	114 bar/turn (1600 psi/turn)	Adjustment with Handknob
CR000009	CPRL-060-PNNR-HN-S10-N100	80 bar (1200 psi)	20-110 bar (300-1600 psi)	37 bar/turn (550 psi/turn)	Adjustment with Screw
CR000010	CPRL-060-PNNR-VN-S10-N100	80 bar (1200 psi)	20-110 bar (300-1600 psi)	37 bar/turn (550 psi/turn)	Adjustment with Handknob

Revision C1

PRESSURE REDUCING AND RELIEVING

CPRL-140-PNNR

PILOT OPERATED
SPOOL TYPE

ATLANTIC Fluid Tech
WWW.SUMY.IR

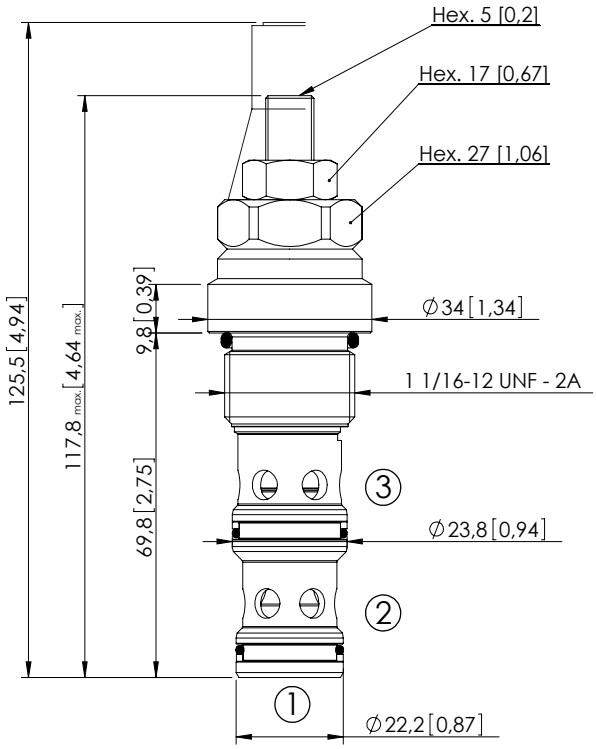

Dimensions: mm [inches]

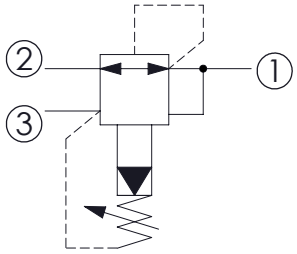

SPECIFICATIONS

Max. operating pressure:	350 bar (5000 psi)
Rated flow:	140 l/min (37 gpm)
Cavity:	SAE-12-3N
Weight:	0,34 kg (0,75 lbs)
Contamination class to ISO 4406:	See technical spec.
Seal kit:	RA700093
Installation torque:	80 - 95 Nm (59 - 70 ft-lb)
MTTFd:	150 - 1200 years: See technical spec.

NOTES

For other configurations/quick codes not available in this catalogue page please consult factory

OPTIONS

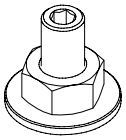

Adjustment with Screw

SEALING CAP

Ordering code: AT000022

CURVES

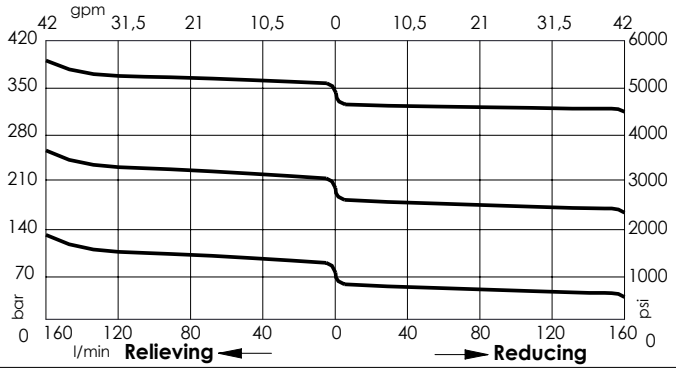

ORDERING CODES

Quick code	Description	Standard setting	Adjustment range	Pressure increase	Options
CR000020	CPRL-140-PNNR-HN-S12-N350	300 bar (4300 psi)	140-350 bar (2000-5000 psi)	114 bar/turn (1600 psi/turn)	Adjustment with Screw
CR000019	CPRL-140-PNNR-HN-S12-N200	200 bar (2900 psi)	70-250 bar (1000-3600 psi)	69 bar/turn (1000 psi/turn)	Adjustment with Screw
CR000018	CPRL-140-PNNR-HN-S12-N100	100 bar (1400 psi)	10-140 bar (150-2000 psi)	37 bar/turn (550 psi/turn)	Adjustment with Screw

Revision A1

PRESSURE REDUCING AND RELIEVING

CPRR-060-PNNR

PILOT OPERATED
SPOOL TYPE

ATLANTIC Fluid Tech
WWW.SUMY.IR

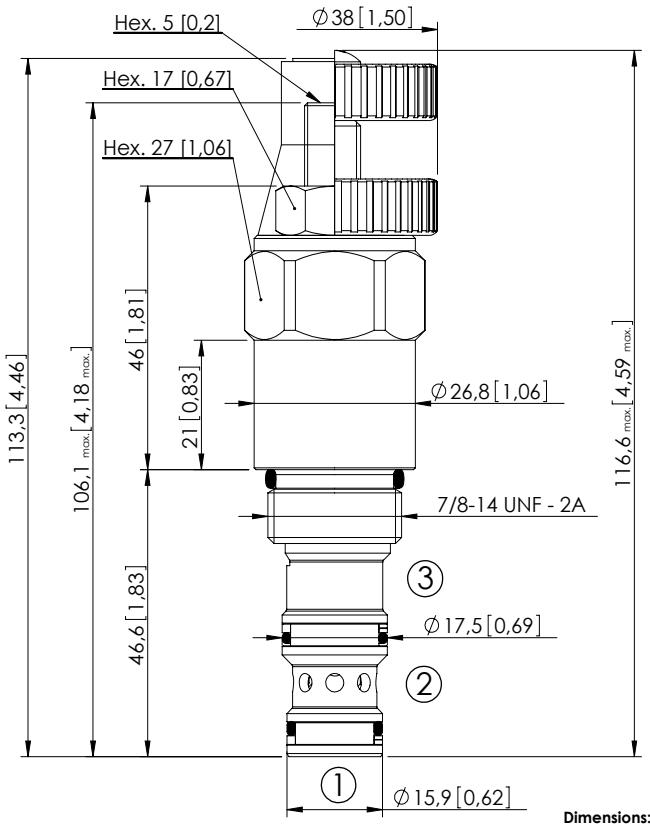

Dimensions: mm [inches]

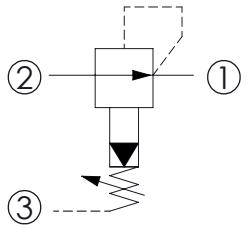

SPECIFICATIONS

Max. operating pressure:	350 bar (5000 psi)
Rated flow:	60 l/min (16 gpm)
Cavity:	SAE-10-3N
Weight:	0,26 kg (0,57 lbs)
Contamination class to ISO 4406:	See technical spec.
Seal kit:	RA700092
Installation torque:	55 - 62 Nm (41 - 46 ft-lb)
MTTFd:	150 - 1200 years: See technical spec.

NOTES

For other configurations/quick codes not available in this catalogue page please consult factory

OPTIONS

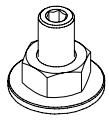

Adjustment with Screw

Adjustment with Handknob

SEALING CAP

Ordering code: AT000022

CURVES

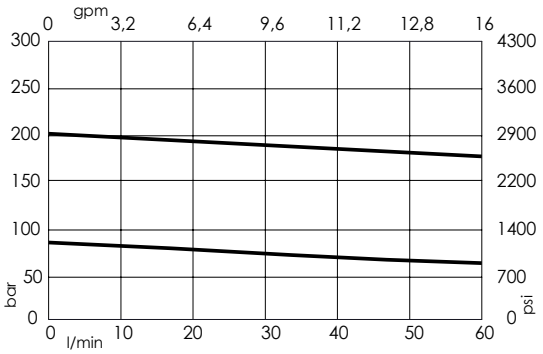

ORDERING CODES

Quick code	Description	Standard setting	Adjustment range	Pressure increase	Options
CR000022	CPRR-060-PNNR-HN-S10-N300	200 bar (2900 psi)	70-350 bar (1000-5000 psi)	114 bar/turn (1600 psi/turn)	Adjustment with Screw
CR000023	CPRR-060-PNNR-VN-S10-N300	200 bar (2900 psi)	70-350 bar (1000-5000 psi)	114 bar/turn (1600 psi/turn)	Adjustment with Handknob
CR000024	CPRR-060-PNNR-HN-S10-N100	80 bar (1100 psi)	20-110 bar (300-1600 psi)	37 bar/turn (550 psi/turn)	Adjustment with Screw
CR000021	CPRR-060-PNNR-VN-S10-N100	80 bar (1100 psi)	20-110 bar (300-1600 psi)	37 bar/turn (550 psi/turn)	Adjustment with Handknob

Revision C1

PRESSURE REDUCING AND RELIEVING

CPRR-140-PNNR

PILOT OPERATED
SPOOL TYPE

ATLANTIC Fluid Tech
WWW.SUMY.IR

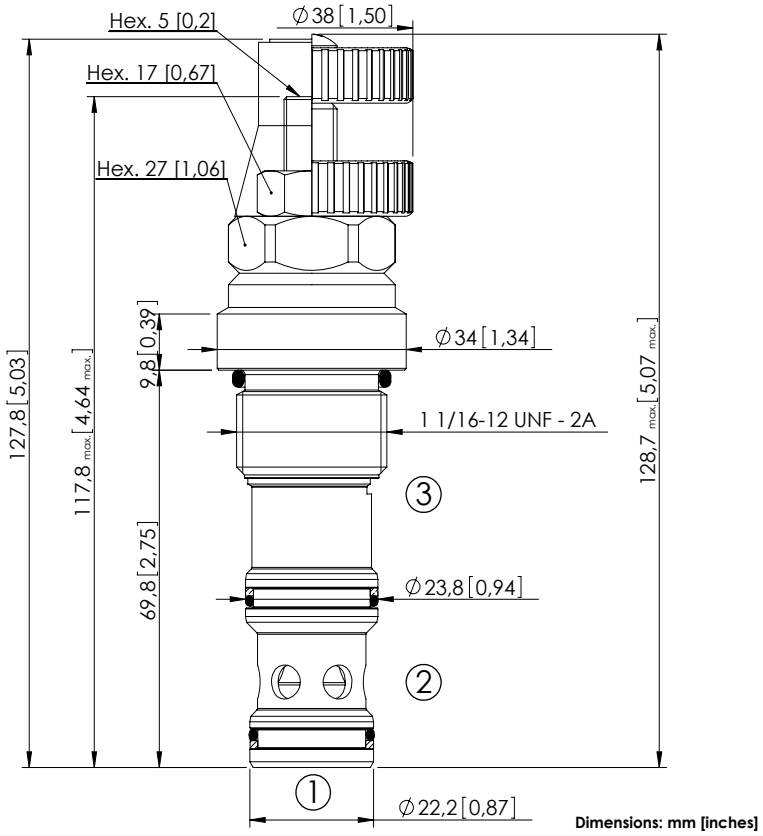

Dimensions: mm [inches]

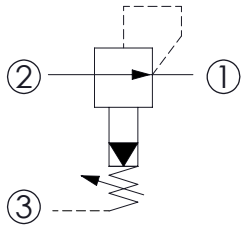

SPECIFICATIONS

Max. operating pressure:	350 bar (5000 psi)
Rated flow:	140 l/min (37 gpm)
Cavity:	SAE-12-3N
Weight:	0,35 kg (0,77 lbs)
Contamination class to ISO 4406:	See technical spec.
Seal kit:	RA700093
Installation torque:	80 - 95 Nm (59 - 70 ft-lb)
MTTFd:	150 - 1200 years: See technical spec.

NOTES

For other configurations/quick codes not available in this catalogue page please consult factory

OPTIONS

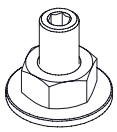

Adjustment with Screw

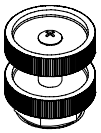

Handknob and locknut

SEALING CAP

Ordering code: AT000022

CURVES

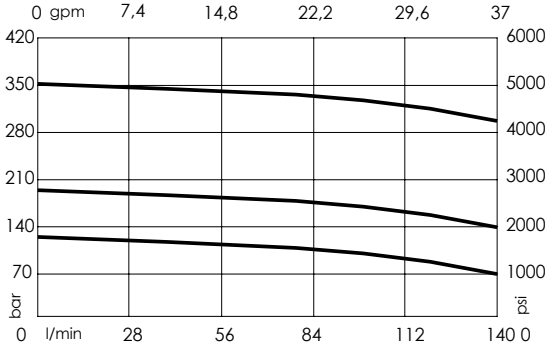

ORDERING CODES

Quick code	Description	Standard setting	Adjustment range	Pressure increase	Options
CR000017	CPRR-140-PNNR-HN-S12-N350	300 bar (4300 psi)	140-350 bar (2000-5000 psi)	114 bar/turn (1600 psi/turn)	Adjustment with Screw
CR000030	CPRR-140-PNNR-VN-S12-N350	300 bar (4300 psi)	140-350 bar (2000-5000 psi)	114 bar/turn (1600 psi/turn)	Adjustment with Handknob
CR000016	CPRR-140-PNNR-HN-S12-N200	200 bar (2900 psi)	70-210 bar (1000-3000 psi)	69 bar/turn (1000 psi/turn)	Adjustment with Screw
CR000027	CPRR-140-PNNR-VN-S12-N200	200 bar (2900 psi)	70-210 bar (1000-3000 psi)	69 bar/turn (1000 psi/turn)	Adjustment with Handknob
CR000015	CPRR-140-PNNR-HN-S12-N100	100 bar (1400 psi)	10-120 bar (150-1700 psi)	37 bar/turn (550 psi/turn)	Adjustment with Screw
CR000031	CPRR-140-PNNR-VN-S12-N100	100 bar (1400 psi)	10-120 bar (150-1700 psi)	37 bar/turn (550 psi/turn)	Adjustment with Handknob

Revision A2

ATLANTIC
Fluid Tech
WWW.SUMY.IR

SECTION 3

Check Valves

SECTION 3

CHECK VALVES

ATLANTIC Fluid Tech
WWW.SUMY.IR

Hydraulic scheme	Valve description	Valve type	Rated flow l/min (gpm)	Max. pressure bar (psi)	Installation	Main port size or cavity type	Page
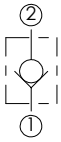	CDVN-050-PSNR	Poppet type	50 (13)	350 (5000)	Cartridge	SAE-08-2N	3.01.**010**
	CDVN-080-PSNR	Poppet type	80 (21)	350 (5000)	Cartridge	SAE-10-2N	3.01.**020**
	CDVN-120-PSNR	Poppet type	120 (32)	350 (5000)	Cartridge	SAE-12-2N	3.01.**030**
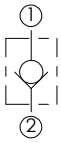	CDVN-010-PAGS	Poppet type, monodirectional	10 (3)	500 (7200)	Insert	G 1/8"	3.02.**040**
	CDVN-020-PAGS	Poppet type, monodirectional	20 (5)	500 (7200)	Insert	G 1/4"	3.02.**040**
	CDVN-050-PAGS	Poppet type, monodirectional	50 (13)	500 (7200)	Insert	G 3/8"	3.02.**040**
	CDVN-080-PAGS	Poppet type, monodirectional	80 (21)	500 (7200)	Insert	G 1/2"	3.02.**040**
	CDVN-120-PAGS	Poppet type, monodirectional	120 (32)	500 (7200)	Insert	G 3/4"	3.02.**040**
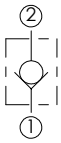	CDVN-010-PANS	Poppet type, monodirectional	10 (3)	500 (7200)	Insert	G 1/8"	3.01.**050**
	CDVN-020-PANS	Poppet type, monodirectional	20 (5)	500 (7200)	Insert	G 1/4"	3.01.**050**
	CDVN-050-PANS	Poppet type, monodirectional	50 (13)	500 (7200)	Insert	G 3/8"	3.01.**050**
	CDVN-080-PANS	Poppet type, monodirectional	80 (21)	500 (7200)	Insert	G 1/2"	3.01.**050**
	CDVN-120-PANS	Poppet type, monodirectional	120 (32)	500 (7200)	Insert	G 3/4"	3.01.**050**
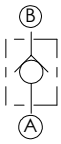	CDVN-010-DSNS	Disk type, bidirectional, not leak proof	10 (3)	350 (5000)	Insert	G1/4"	3.03.**060**
	CDVN-030-DSNS	Disk type, bidirectional, not leak proof	30 (8)	350 (5000)	Insert	G3/8"	3.03.**060**
	CDVN-070-DSNS	Disk type, bidirectional, not leak proof	70 (19)	350 (5000)	Insert	G1/2"	3.03.**060**

CHECK VALVE

CDVN-050-PSNR

POPPET TYPE

ATLANTIC Fluid Tech
WWW.SUMY.IR

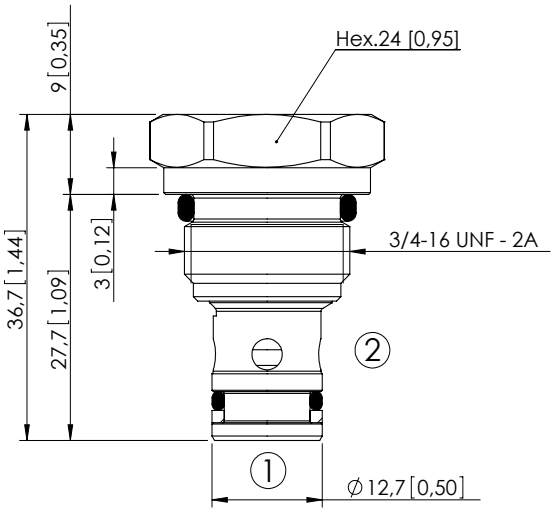

Dimensions: mm [inches]

SPECIFICATIONS

Max. operating pressure:	350 bar (5000 psi)
Rated flow:	50 l/min (13 gpm)
Cavity:	SAE-08-2N
Weight:	0,06 kg (0,13 lbs)
Contamination class to ISO 4406:	See technical spec.
Seal kit:	RA700081
Installation torque:	45 - 50 Nm (33 - 37 ft-lb)
MTTFd:	150 - 1200 years: See technical spec.

NOTES

For other configurations/quick codes not available in this catalogue page please consult factory

CURVES

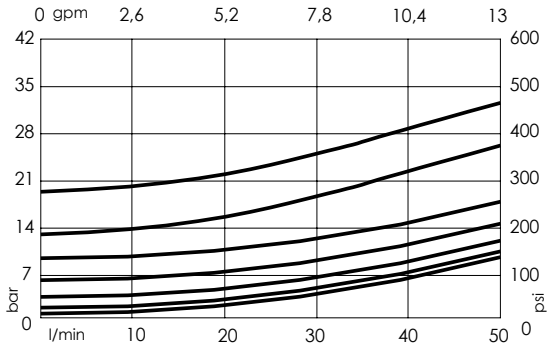

ORDERING CODES

Quick code	Description	Cracking pressure
CD000099	CDVN-050-PSNR-FN-S08-N000	0,35 bar (5 psi)
CD000024	CDVN-050-PSNR-FN-S08-N001	1 bar (15 psi)
CD000039	CDVN-050-PSNR-FN-S08-N003	3 bar (50 psi)
CD000269	CDVN-050-PSNR-FN-S08-N006	6 bar (75 psi)
CD000471	CDVN-050-PSNR-FN-S08-N009	9,5 bar (125 psi)
CD000070	CDVN-050-PSNR-FN-S08-N013	13 bar (175 psi)
CD000620	CDVN-050-PSNR-FN-S08-N020	20 bar (290 psi)

Revision A1

CHECK VALVE

CDVN-080-PSNR

POPPET TYPE

ATLANTIC Fluid Tech
WWW.SUMY.IR

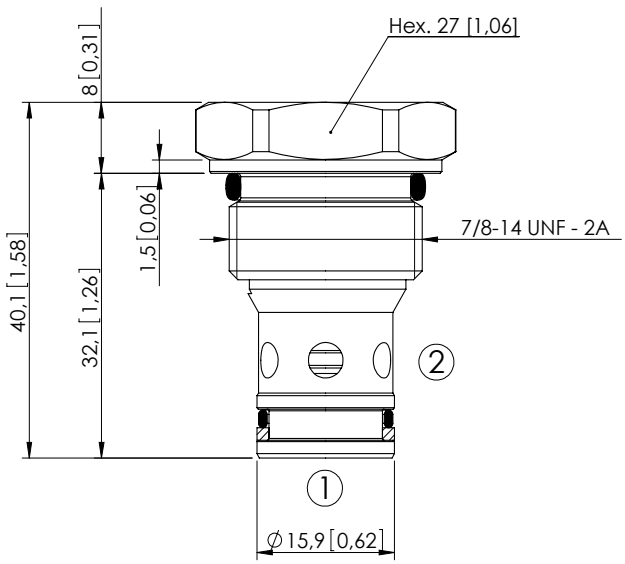

Dimensions: mm [inches]

SPECIFICATIONS

Max. operating pressure:	350 bar (5000 psi)
Rated flow:	80 l/min (21 gpm)
Cavity:	SAE-10-2N
Weight:	0,09 kg (0,2 lbs)
Contamination class to ISO 4406:	See technical spec.
Seal kit:	RA700082
Installation torque:	55 - 62 Nm (41 - 46 ft-lb)
MTTFd:	150 - 1200 years: See technical spec.

NOTES

For other configurations/quick codes not available in this catalogue page please consult factory

CURVES

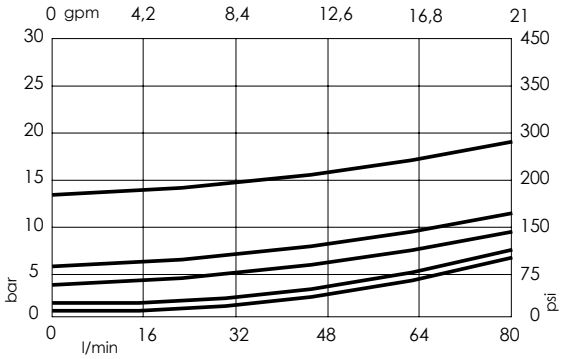

ORDERING CODES

Quick code	Description	Cracking pressure
CD000100	CDVN-080-PSNR-FN-S10-N000	0,35 bar (5 psi)
CD000023	CDVN-080-PSNR-FN-S10-N001	1 bar (15 psi)
CD000169	CDVN-080-PSNR-FN-S10-N002	2 bar (30 psi)
CD000101	CDVN-080-PSNR-FN-S10-N005	5,5 bar (75 psi)
CD000092	CDVN-080-PSNR-FN-S10-N007	7 bar (100 psi)
CD000082	CDVN-080-PSNR-FN-S10-N013	13 bar (200 psi)

Revision B2

CHECK VALVE

CDVN-120-PSNR

POPPET TYPE

ATLANTIC Fluid Tech
WWW.SUMY.IR

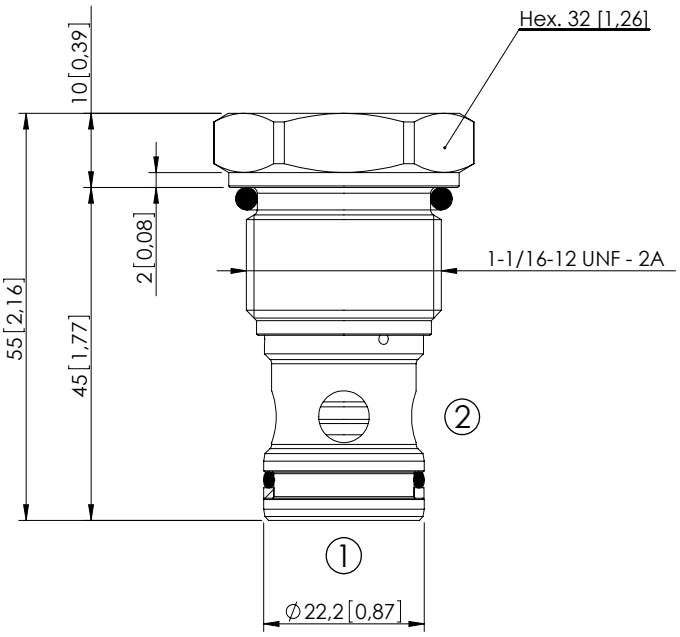

Dimensions: mm [inches]

SPECIFICATIONS

Max. operating pressure:	350 bar (5000 psi)
Rated flow:	120 l/min (32 gpm)
Cavity:	SAE-12-2N
Weight:	0,3 kg (0,4 lbs)
Contamination class to ISO 4406:	See technical spec.
Seal kit:	RA700083
Installation torque:	110 - 130 Nm (81 - 96 ft-lb)
MTTFd:	150 - 1200 years: See technical spec.

NOTES

For other configurations/quick codes not available in this catalogue page please consult factory

CURVES

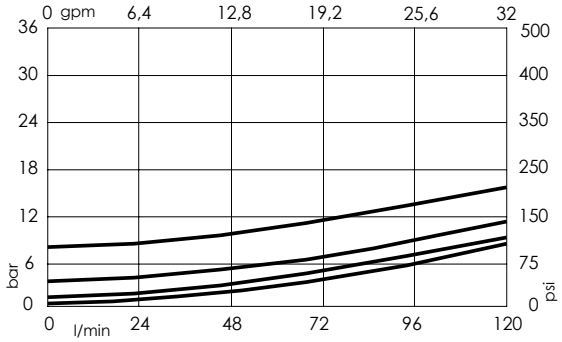

ORDERING CODES

Quick code	Description	Cracking pressure	
CD000444	CDVN-120-PSNR-FN-S12-N000	0,3 bar (5 psi)	
CD000046	CDVN-120-PSNR-FN-S12-N001	1 bar (15 psi)	
CD000310	CDVN-120-PSNR-FN-S12-N004	4 bar (50 psi)	
CD000445	CDVN-120-PSNR-FN-S12-N008	8 bar (100 psi)	

Revision A1

CHECK VALVE

CDVN-XXX-PAGS

MONODIRECTIONAL
POPPET TYPE

ATLANTIC Fluid Tech
WWW.SUMY.IR

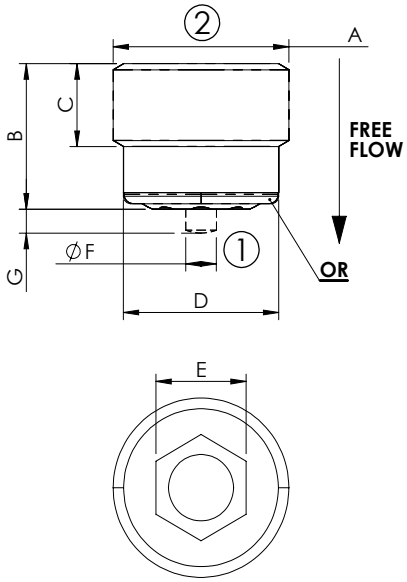

Dimensions: mm [inches]

SPECIFICATIONS

Max. operating pressure:	500 bar (7200 psi)
Weight:	3 - 45 g (0,01 - 0,1 lbs)
Contamination class to ISO 4406:	See technical spec.
MTTFd:	150 - 1200 years: See technical spec.

NOTES

Hardened seat and piston

For other configurations/quick codes not available in this catalogue page please consult factory

SPECIFICATIONS

Quick code	A	B	C	D	E	F	G	OR
CD000179	G 1/8"	7,9 [0,31]	4,5 [0,18]	8,6 [0,34]	Hex. 5 [0,2]	1,7 [0,07]	1,3 [0,05]	6,00 x 1 N70 [0,236x0,039]
CD000180	G 1/4"	10,3 [0,41]	5,5 [0,22]	11,6 [0,46]	Hex. 7 [0,28]	2,0 [0,08]	1,3 [0,05]	9,00 x 1 N70 [0,354x0,039]
CD000181	G 3/8"	11,7 [0,46]	7,0 [0,28]	15 [0,59]	Hex. 6 [0,24]	2,7 [0,11]	2,0 [0,08]	11,00 x 1,5 N70 [0,433x0,059]
CD000182	G 1/2"	13,2 [0,52]	8,0 [0,32]	18,5 [0,73]	Hex.8 [0,32]	3,2 [0,13]	2,5 [0,1]	14,00 x 1,5 N70 [0,551x0,059]
CD000183	G 3/4"	17,1 [0,67]	10,5 [0,41]	24 [0,95]	Hex.12 [0,47]	5,5 [0,22]	3,8 [0,15]	18,77 x 1,78 N70 [0,739x0,070]

CURVES

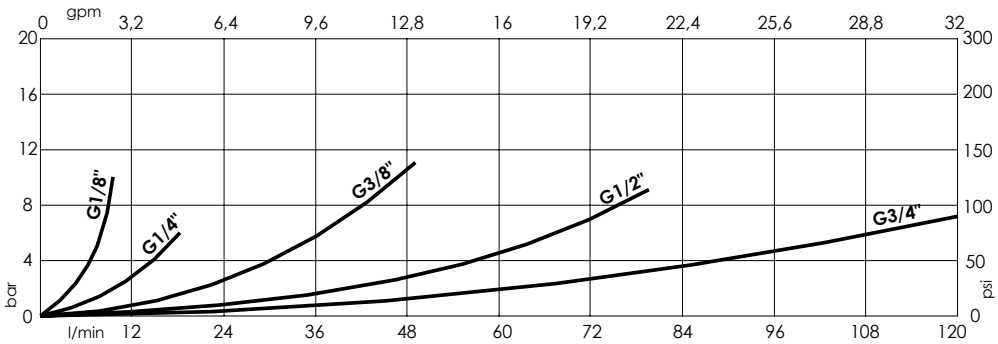

ORDERING CODES

Quick code	Description	Cracking pressure	Rated flow	Cavity	Installation torque
CD000179	CDVN-010-PAGS-307-N001	0,1 bar (1,5 psi)	10 l/min (3 gpm)	VP000307 (G1/8")	8 Nm (6 ft-lb)
CD000180	CDVN-020-PAGS-309-N001	0,1 bar (1,5 psi)	20 l/min (5 gpm)	VP000309 (G1/4")	15 Nm (11 ft-lb)
CD000181	CDVN-050-PAGS-310-N001	0,1 bar (1,5 psi)	50 l/min (13 gpm)	VP000310 (G3/8")	20 Nm (15 ft-lb)
CD000182	CDVN-080-PAGS-311-N001	0,2 bar (3 psi)	80 l/min (21 gpm)	VP000311 (G1/2")	40 Nm (30 ft-lb)
CD000183	CDVN-120-PAGS-312-N001	0,1 bar (1,5 psi)	120 l/min (32 gpm)	VP000312 (G3/4")	80 Nm (59 ft-lb)

Revision B1

CHECK VALVE

CDVN-XXX-PANS

MONODIRECTIONAL
POPPET TYPE

ATLANTIC Fluid Tech
WWW.SUMY.IR

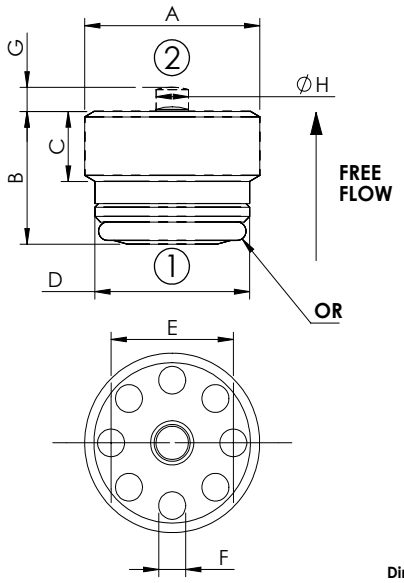

Dimensions: mm [inches]

SPECIFICATIONS

Max. operating pressure:	500 bar (7200 psi)
Weight:	3 - 45 g (0,01 - 0,1 lbs)
Contamination class to ISO 4406:	See technical spec.
MTTFd:	150 - 1200 years: See technical spec.

NOTES

Hardened seat and piston
For other configurations/quick codes not available in this catalogue page please consult factory

SPECIFICATIONS

Quick code	A	B	C	D	E	F	G	H	OR
CD000173	G 1/8"	7,2 [0,28]	3,8 [0,15]	8,6 [0,34]	6,8 [0,27]	1,5 [0,06]	1,3 [0,05]	1,8 [0,07]	6,00 x 1 N70 [0,236x0,039]
CD000174	G 1/4"	9 [0,32]	4,5 [0,18]	11,5 [0,45]	8,8 [0,35]	2,2 [0,09]	1,5 [0,06]	2,4 [0,09]	9,00 x 1 N70 [0,354x0,039]
CD000175	G 3/8"	11,2 [0,44]	6,5 [0,26]	15 [0,59]	11 [0,43]	3 [0,12]	2,5 [0,1]	3,2 [0,13]	11,00 x 1,5 N70 [0,433x0,059]
CD000176	G 1/2"	13,5 [0,53]	8 [0,32]	18,5 [0,73]	14,2 [0,56]	3,8 [0,15]	3 [0,12]	4 [0,16]	14,00 x 1,5 N70 [0,551x0,059]
CD000178	G 3/4"	17,5 [0,69]	10 [0,39]	24 [0,95]	18,5 [0,73]	4,6 [0,18]	3,5 [0,14]	5,5 [0,22]	18,77 x 1,78 N70 [0,739x0,070]

CURVES

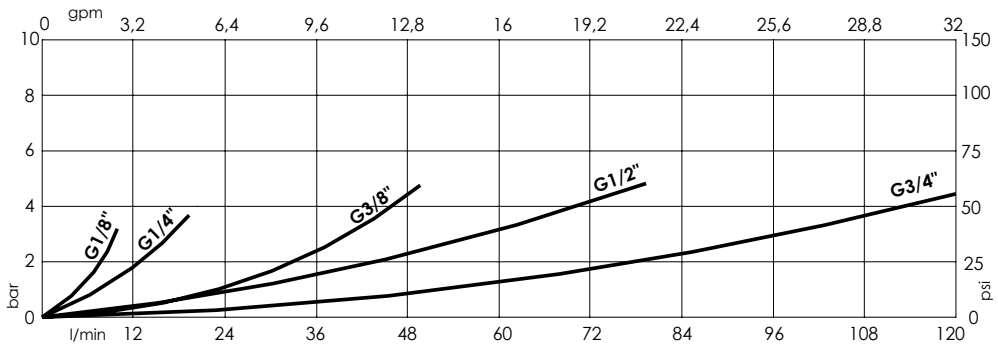

ORDERING CODES

Quick code	Description	Cracking pressure	Rated flow	Cavity	Installation torque	Installation tool
CD000173	CDVN-010-PANS-307-N001	0,1 bar (1,5 psi)	10 l/min (3 gpm)	VP000307 (G1/8")	8 Nm (6 ft-lb)	UM000390
CD000174	CDVN-020-PANS-309-N001	0,2 bar (3 psi)	20 l/min (5 gpm)	VP000309 (G1/4")	15 Nm (11 ft-lb)	UM000391
CD000175	CDVN-050-PANS-310-N001	0,2 bar (3 psi)	50 l/min (13 gpm)	VP000310 (G3/8")	20 Nm (15 ft-lb)	UM000392
CD000176	CDVN-080-PANS-311-N001	0,2 bar (3 psi)	80 l/min (21 gpm)	VP000311 (G1/2")	40 Nm (30 ft-lb)	UM000393
CD000178	CDVN-120-PANS-312-N001	0,1 bar (1,5 psi)	120 l/min (32 gpm)	VP000312 (G3/4")	80 Nm (59 ft-lb)	UM000394

Revision B1

CHECK VALVE

CDVN-XXX-DSNS

INSERT TYPE
DOUBLE MOUNTING

ATLANTIC Fluid Tech
WWW.SUMY.IR

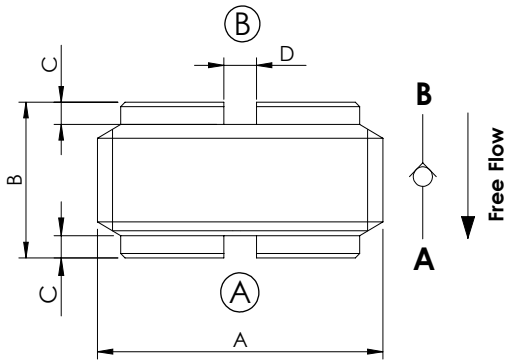

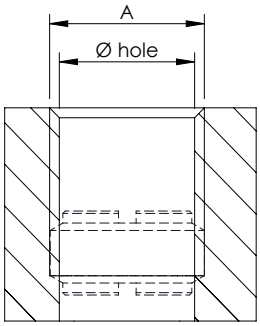

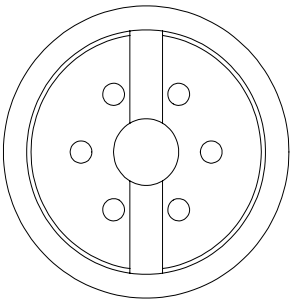

Dimensions: mm [inches]

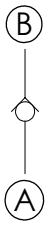

SPECIFICATIONS

Max. operating pressure:	350 bar (5000 psi)
Maximum leakage at 300 bar:	0,5 l/min (0,13 gpm)
Contamination class to ISO 4406:	See technical spec.
MTTFd:	150 - 1200 years: See technical spec.

NOTES

-Disk type
-Not leak proof
-Without spring

In order to have the same leakage as indicated, the hole must be as shown in the table.

For other configurations/quick codes not available in this catalogue page please consult factory

CURVES

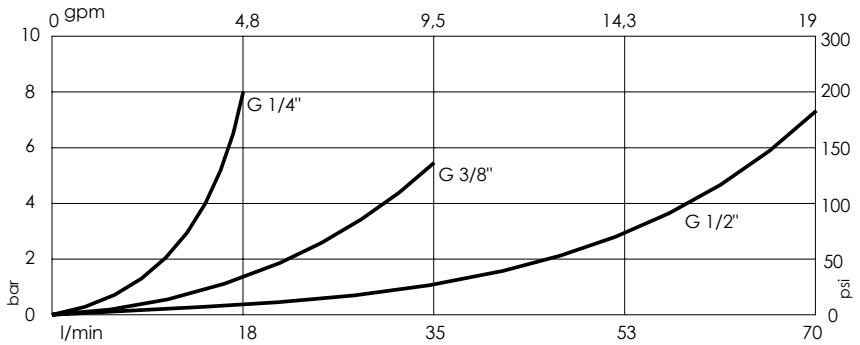

B →A

ORDERING CODES

Quick code	Description	Installation torque	Cracking pressure	Rated flow	Dimension					
					A	B	C	D	Ø hole	Weigh
CD000150	CDVN-010-DSNS-00-G14-N350	5 Nm (4 ft-lb)	0	10 l/min (3 gpm)	G 1/4"	7 [0,28]	1 [0,04]	1,5 [0,06]	13,15 [0,52]	4,5 g [0,001 lb]
CD000148	CDVN-030-DSNS-00-G38-N350	10 Nm (7 ft-lb)	0	30 l/min (8 gpm)	G 3/8"	7,5 [0,3]	1 [0,04]	1,5 [0,06]	16,65 [0,65]	7,5 g [0,01 lb]
CD000151	CDVN-070-DSNS-00-G12-N350	10 Nm (7 ft-lb)	0	70 l/min (19 gpm)	G 1/2"	11 [0,43]	1,5 [0,06]	1,5 [0,06]	20,95 [0,82]	15 g [0,03 lb]

Revision A1

ATLANTIC
Fluid Tech
WWW.SUMY.IR

SECTION 4

Pilot Operated Check Valves

SECTION 4

PILOT OPERATED CHECK VALVES

ATLANTIC Fluid Tech
WWW.SUMY.IR

Hydraulic scheme	Valve description	Valve type	Rated flow l/min (gpm)	Max. pressure bar (psi)	Installation	Main port size or cavity type	Page
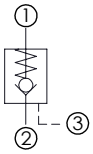	CDPN-030-PSGR	Poppet type	30 (8)	350 (5000)	Cartridge	SAE-08-3C	4.01.**010**
	CDPN-060-PSGR	Poppet type	60 (16)	350 (5000)	Cartridge	SAE-10-3C	4.01.**020**
	CDPN-060-PSGR	Poppet type	60 (16)	350 (5000)	Cartridge	VP000161 (T-11A)	4.01.**030**
	CDPN-120-PSGR	Poppet type	120 (32)	350 (5000)	Cartridge	VP000165 (T-2A)	4.01.**040**
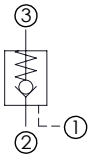	CDPN-030-PANR	Poppet type	30 (8)	350 (5000)	Cartridge	VP000314	4.02.**050**
	CDPN-030-PSNE	Poppet type, separate pilot piston	30 (8)	350 (5000)	Cartridge	VP000028	4.02.**060**

PILOT OPERATED CHECK VALVE

CDPN-030-PSGR

INTEGRAL PILOT PISTON

ATLANTIC Fluid Tech
WWW.SUMY.IR

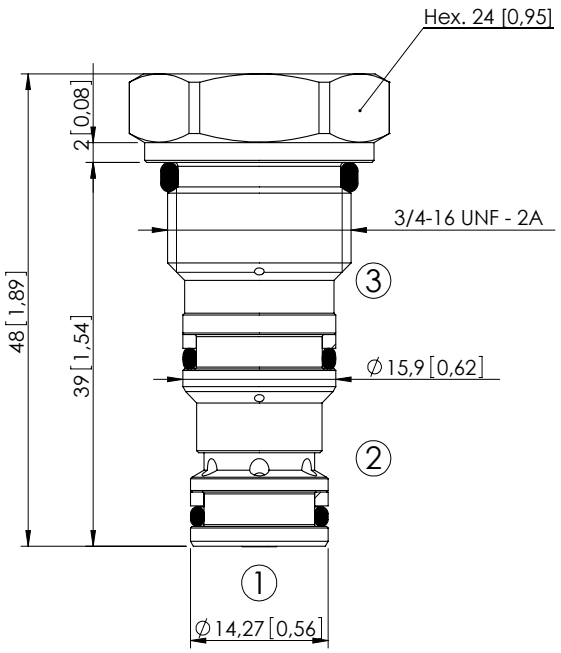

Dimensions: mm [inches]

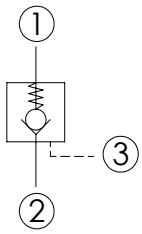

SPECIFICATIONS

Max. operating pressure:	350 bar (5000 psi)
Rated flow:	30 l/min (8 gpm)
Cavity:	SAE-08-3C
Weight:	0,09 kg (0,2 lbs)
Pilot ratio:	3:1
Contamination class to ISO 4406:	See technical spec.
Seal kit:	RA700086
Installation torque:	40 - 45 Nm (30 - 33 ft-lb)
MTTFd:	150 - 1200 years: See technical spec.

NOTES

For other configurations/quick codes not available in this catalogue page please consult factory

CURVES

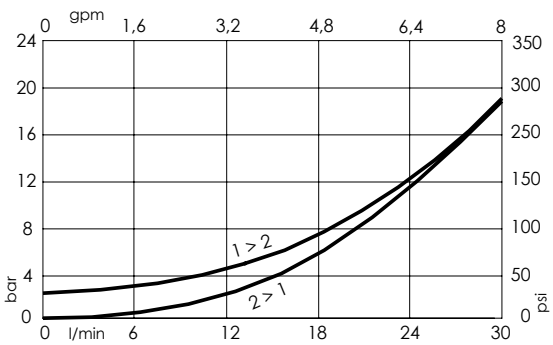

ORDERING CODES

Quick code	Description	Cracking pressure	O-ring on pilot piston	
CD000027	CDPN-030-PSGR-03-S08-N002	2 bar (25 psi)	YES	
CD000061	CDPN-030-PSGM-03-S08-N002	2 bar (25 psi)	NO	

Revision C1

PILOT OPERATED CHECK VALVE

CDPN-060-PSGR

INTEGRAL PILOT PISTON

ATLANTIC Fluid Tech
WWW.SUMY.IR

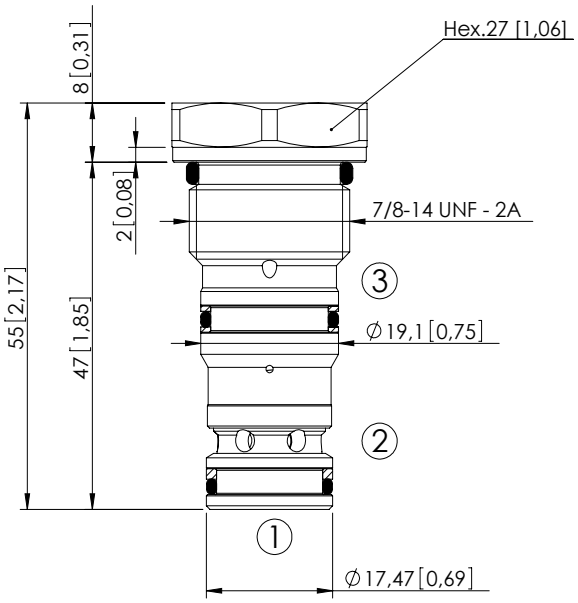

Dimensions: mm [inches]

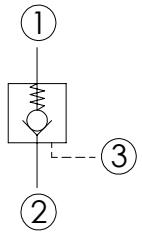

SPECIFICATIONS

Max. operating pressure:	350 bar (5000 psi)
Rated flow:	60 l/min (16 gpm)
Cavity:	SAE-10-3C
Weight:	0,12 kg (0,27 lbs)
Pilot ratio:	3,2 : 1
Contamination class to ISO 4406:	See technical spec.
Seal kit:	RB700087
Installation torque:	55 - 62 Nm (41 - 46 ft-lb)
MTTFd:	150 - 1200 years: See technical spec.

NOTES

For other configurations/quick codes not available in this catalogue page please consult factory

CURVES

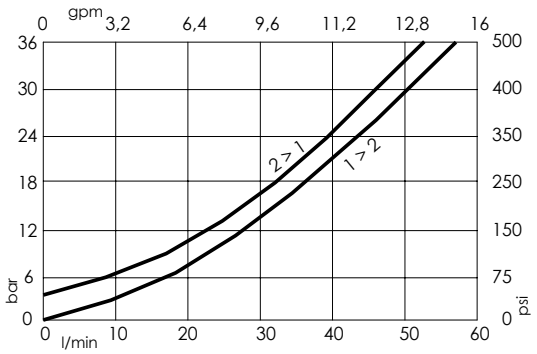

ORDERING CODES

Quick code	Description	Cracking pressure	O-ring on pilot piston	
CD000109	CDPN-060-PSGR-03-S10-N002	2 bar (25 psi)	YES	
CD000113	CDPN-060-PSGM-03-S10-N002	2 bar (25 psi)	NO	
CD000170	CDPN-060-PSGR-03-S10-N005	5 bar (75 psi)	YES	
CD000171	CDPN-060-PSGM-03-S10-N005	5 bar (75 psi)	NO	

Revision B1

PILOT OPERATED CHECK VALVE

CDPN-060-PSGR

INTEGRAL PILOT PISTON

ATLANTIC Fluid Tech
WWW.SUMY.IR

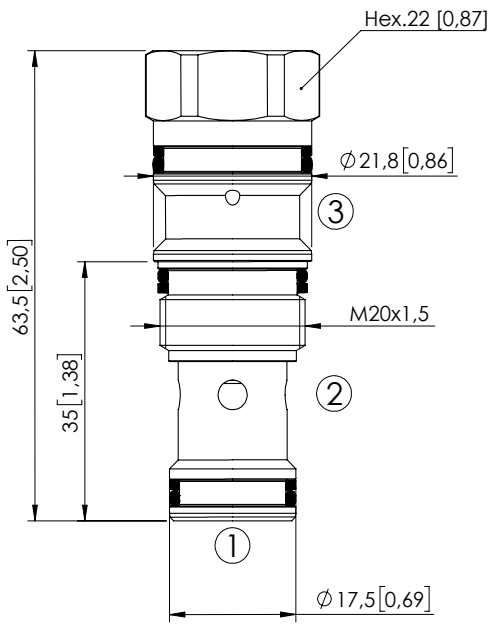

Dimensions: mm [inches]

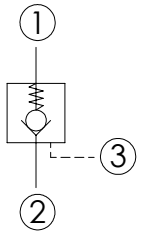

SPECIFICATIONS

Max. operating pressure:	350 bar (5000 psi)
Rated flow:	60 l/min (16 gpm)
Cavity:	VP000161 (SUN T-11A)
Weight:	0,12 kg (0,27 lbs)
Pilot ratio:	3,2:1
Contamination class to ISO 4406:	See technical spec.
Seal kit:	RC700161
Installation torque:	40 - 50 Nm (30 - 37 ft-lb)
MTTFd:	150 - 1200 years: See technical spec.

NOTES

For other configurations/quick codes not available in this catalogue page please consult factory

CURVES

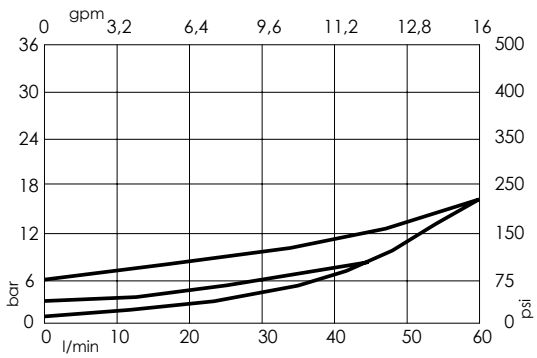

ORDERING CODES

Quick code	Description	Cracking pressure	O-ring on pilot piston	
CD000555	CDPN-060-PSGR-03-161-N000	0,3 bar (5 psi)	YES	
CD000226	CDPN-060-PSGR-03-161-N002	2 bar (25 psi)	YES	
CD000227	CDPN-060-PSGM-03-161-N002	2 bar (25 psi)	NO	
CD000224	CDPN-060-PSGR-03-161-N005	5 bar (75 psi)	YES	
CD000225	CDPN-060-PSGM-03-161-N005	5 bar (75 psi)	NO	

Revision A1

PILOT OPERATED CHECK VALVE

CDPN-120-PSGR

INTEGRAL PILOT PISTON

ATLANTIC Fluid Tech
WWW.SUMY.IR

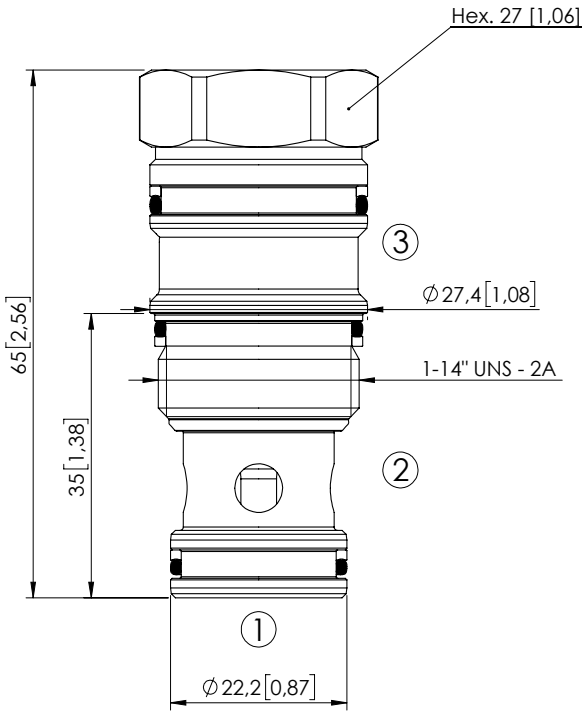

Dimensions: mm [inches]

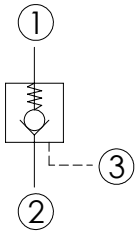

SPECIFICATIONS

Max. operating pressure:	350 bar (5000 psi)
Rated flow:	120 l/min (32 gpm)
Cavity:	VP000165 (SUN T-2A)
Weight:	0,2 kg (0,44 lbs)
Pilot ratio:	3,5 : 1
Contamination class to ISO 4406:	See technical spec.
Seal kit:	RC700165
Installation torque:	60 - 65 Nm (44 - 48 ft-lb)
MTTFd:	150 - 1200 years: See technical spec.

NOTES

For other configurations/quick codes not available in this catalogue page please consult factory

CURVES

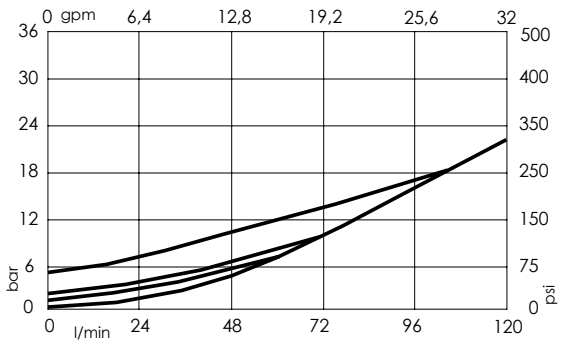

ORDERING CODES

Quick code	Description	Cracking pressure	O-ring on pilot piston	
CD000546	CDPN-120-PSGR-03-165-N000	0,3 bar (5 psi)	NO	
CD000504	CDPN-120-PSGR-03-165-N002	2 bar (25 psi)	YES	
CD000549	CDPN-120-PSGM-03-165-N002	2 bar (25 psi)	NO	
CD000536	CDPN-120-PSGM-03-165-N003	3 bar (50 psi)	NO	
CD000547	CDPN-120-PSGR-03-165-N005	5 bar (75 psi)	YES	

Revision A1

PILOT OPERATED CHECK VALVE

CDPN-030-PANR

INTEGRAL PILOT PISTON

ATLANTIC Fluid Tech
WWW.SUMY.IR

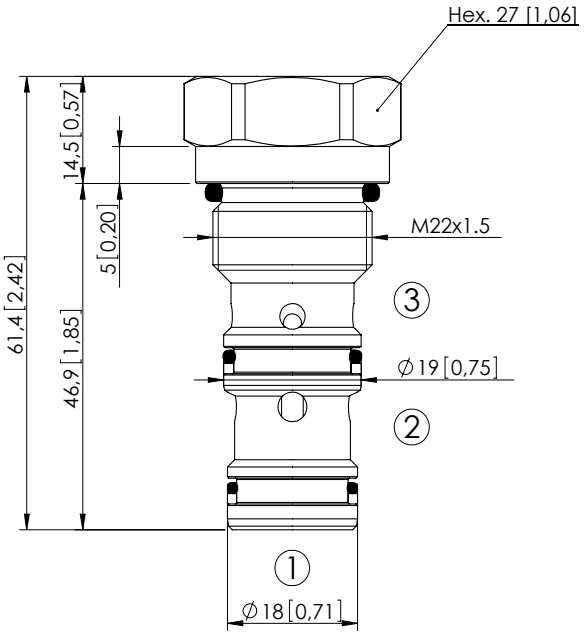

Dimensions: mm [inches]

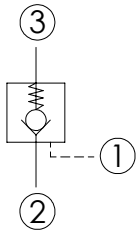

SPECIFICATIONS

Max. operating pressure:	350 bar (5000 psi)
Rated flow:	30 l/min (8 gpm)
Cavity:	VP000314
Weight:	0,1 kg (0,22 lbs)
Pilot ratio:	4 : 1
Contamination class to ISO 4406:	See technical spec.
Seal kit:	RC700314
Installation torque:	55 - 62 Nm (41 - 46 ft-lb)
MTTFd:	150 - 1200 years: See technical spec.

NOTES

For other configurations/quick codes not available in this catalogue page please consult factory

CURVES

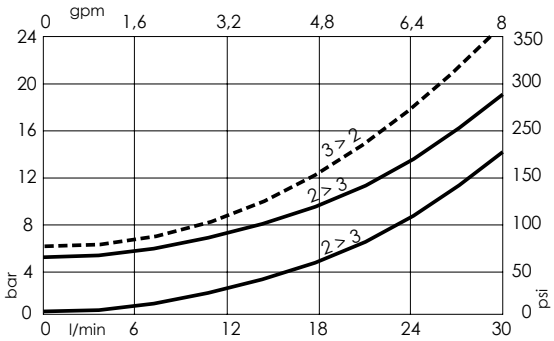

ORDERING CODES

Quick code	Description	Cracking pressure	O-ring on pilot piston	
CD000186	CDPN-030-PANR-04-314-N005	5 bar (75 psi)	YES	
CD000235	CDPN-030-PANM-04-314-N001	1 bar (15 psi)	NO	

Revision B1

PILOT OPERATED CHECK VALVE

CDPN-030-PSNE

SEPARATE PILOT PISTON

ATLANTIC Fluid Tech
WWW.SUMY.IR

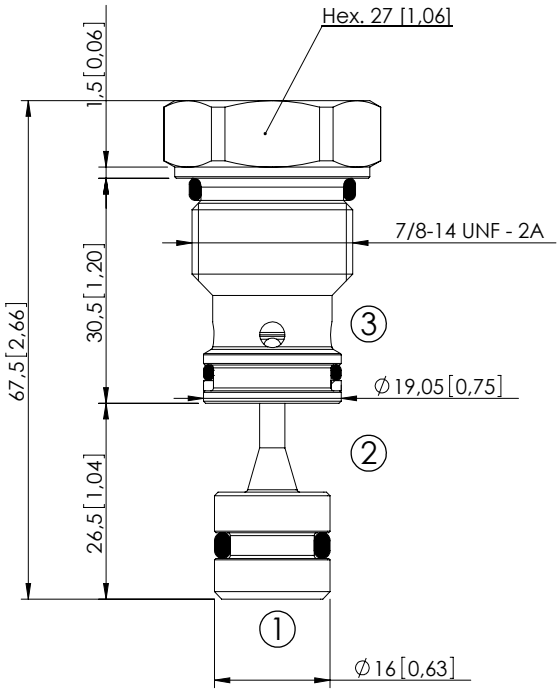

Dimensions: mm [inches]

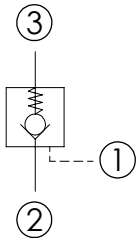

SPECIFICATIONS

Max. operating pressure:	350 bar (5000 psi)
Rated flow:	30 l/min (8 gpm)
Cavity:	VP000028
Weight:	0,13 kg (0,29 lbs)
Pilot ratio:	7:1
Contamination class to ISO 4406:	See technical spec.
Installation torque:	80 - 90 Nm (59 - 66 ft-lb)
MTTFd:	150 - 1200 years: See technical spec.

NOTES

For other configurations/quick codes not available in this catalogue page please consult factory

CURVES

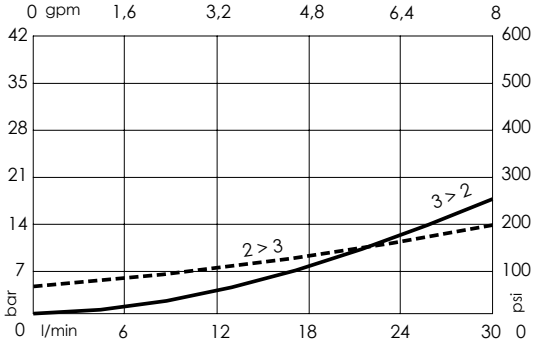

ORDERING CODES

Quick code	Description	Cracking pressure	O-ring on pilot piston	
SC000002	CDPN-030-PSNE-07-028-N005	4,5 bar (75 psi)	YES	
SC000044	CDPN-030-PSNN-07-028-N005	4,5 bar (75 psi)	NO	

Revision A1

ATLANTIC
Fluid Tech
WWW.SUMY.IR

SECTION 5

Shuttle and Logic Elements

SECTION 5

SHUTTLE AND LOGIC ELEMENTS

ATLANTIC Fluid Tech

Hydraulic scheme	Valve description	Valve type	Rated flow l/min (gpm)	Max. pressure bar (psi)	Installation	Main port size or cavity type	Page
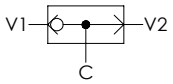	CDSN-005-SSNS	Shuttle	5 (1,3)	350 (5000)	Insert	VP000018	5.01.**010**
	CDSN-030-SSNS	Shuttle	30 (8)	350 (5000)	Insert	VP000079	5.01.**020**
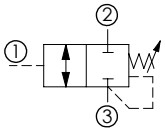	CDLN-040-CCTC	Direct acting, spool type	40 (11)	350 (5000)	Cartridge	SAE-10-3N	5.02.**030**
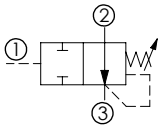	CDLN-040-CCTE	Direct acting, spool type	40 (11)	350 (5000)	Cartridge	SAE-10-3N	5.03.**040**
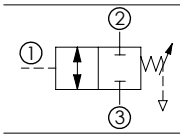	CDLN-040-CCVC	Direct acting, spool type	40 (11)	350 (5000)	Cartridge	SAE-10-3N	5.04.**050**
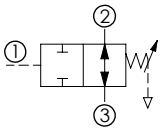	CDLN-040-CCVE	Direct acting, spool type	40 (11)	350 (5000)	Cartridge	SAE-10-3N	5.05.**060**
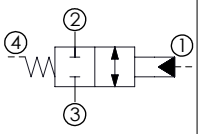	CDLC-150-CCTB	Direct acting, spool type	150 (40)	350 (5000)	Cartridge	SAE-12-4N	5.06.**070**
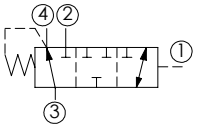	CDLN-040-CDTK	Direct acting, spool type	40 (11)	350 (5000)	Cartridge	SAE-10-4N	5.07.**080**
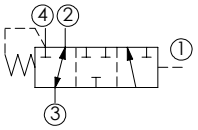	CDLN-040-CDTH	Direct acting, spool type	40 (11)	350 (5000)	Cartridge	SAE-10-4N	5.08.**090**
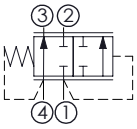	CDLN-040-CDPB	Direct acting, spool type	40 (11)	350 (5000)	Cartridge	SAE-10-4N	5.09.**100**
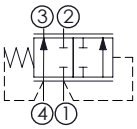	CDLN-120-CDPB	Direct acting, spool type	120 (32)	350 (5000)	Cartridge	SAE-12-4N	5.09.**110**
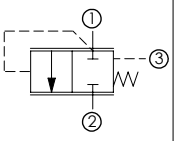	CDLN-100-CCPC	Normally closed, spool type	100 (26)	350 (5000)	Cartridge	SAE-10-3C	5.10.**120**
	CDLN-100-CCRC	Normally closed, spool type, adjustable setting	100 (26)	350 (5000)	Cartridge	SAE-10-3C	5.10.**130**
	CDLN-160-SCTC	Normally closed, spool type	160 (43)	350 (5000)	Cartridge	VP000065	5.10.**140**
	CDLN-300-SCTC	Normally closed, spool type	300 (79)	350 (5000)	Cartridge	VP000058	5.10.**150**
	CDLN-500-SCTC	Normally closed, spool type	500 (132)	350 (5000)	Cartridge	VP000178	5.10.**160**

SECTION 5

SHUTTLE AND LOGIC ELEMENTS

ATLANTIC Fluid Tech
WWW.SUMY.IR

Hydraulic scheme	Valve description	Valve type	Rated flow l/min (gpm)	Max. pressure bar (psi)	Installation	Main port size or cavity type	Page
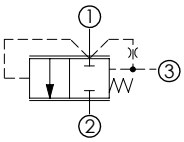	CDLN-100-CCPC	Normally closed, spool type	100 (26)	350 (5000)	Cartridge	SAE-10-3C	5.11.**170**
	CDLN-100-CCRC	Normally closed, spool type, adjustable setting	100 (26)	350 (5000)	Cartridge	SAE-10-3C	5.11.**180**
	CDLN-160-SCTD	Normally closed, spool type with internal orifice	160 (43)	350 (5000)	Cartridge	VP000065	5.11.**190**
	CDLN-300-SCTD	Normally closed, spool type with internal orifice	300 (79)	350 (5000)	Cartridge	VP000058	5.11.**200**
	CDLN-500-SCTD	Normally closed, spool type with internal orifice	500 (132)	350 (5000)	Cartridge	VP000178	5.11.**210**
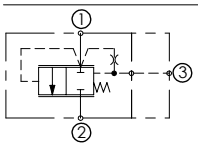	CDLN-500-PCPS	Normally closed, poppet type, externally piloted	500 (132)	350 (5000)	Cartridge	VP000189	5.12.**220**

SHUTTLE VALVE

CDSN-005-SSNS

INSERT TYPE

ATLANTIC Fluid Tech
WWW.SUMY.IR

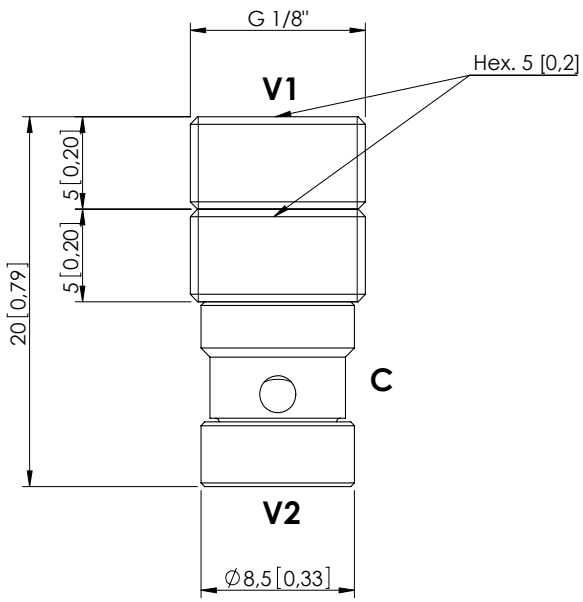

Dimensions: mm [inches]

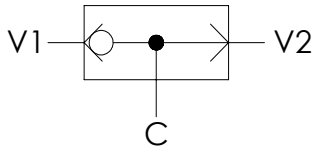

SPECIFICATIONS

Max. operating pressure:	350 bar (5000 psi)
Rated flow:	5 l/min (1,3 gpm)
Cavity:	VP000018
Weight:	0,01 kg (0,02 lbs)
Installation torque:	12 - 15 Nm (9 - 11 ft-lb)
Contamination class to ISO 4406:	See technical spec.
MTTFd:	150 - 1200 years: See technical spec.

NOTES

For other configurations/quick codes not available in this catalogue page please consult factory

CURVES

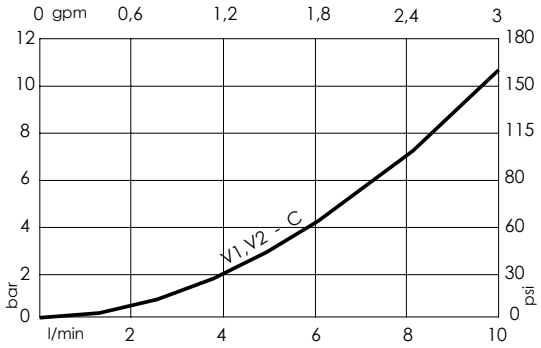

ORDERING CODES

Quick code	Description	
CD000001	CDSN-005-SSNS-FN-018-N000	

Revision A1

SHUTTLE VALVE

CDSN-030-SSNS

INSERT TYPE

ATLANTIC Fluid Tech
WWW.SUMY.IR

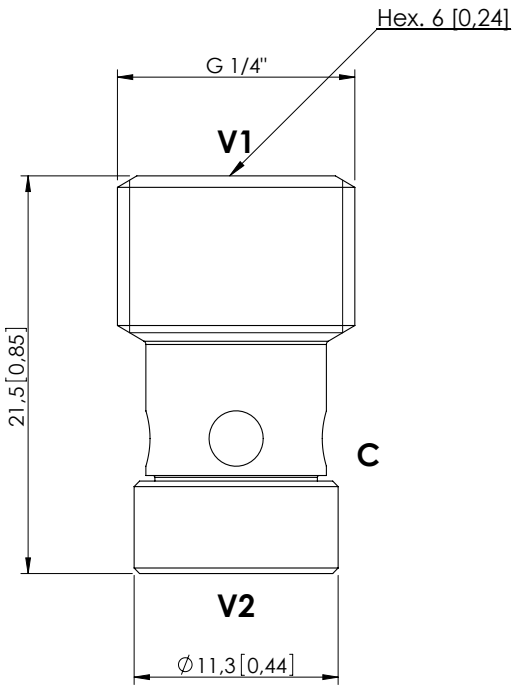

Dimensions: mm [inches]

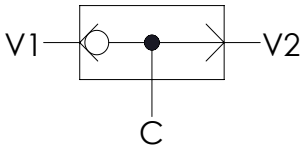

SPECIFICATIONS

Max. operating pressure:	350 bar (5000 psi)
Rated flow:	30 l/min (8 gpm)
Cavity:	VP000079
Weight:	0,01 kg (0,02 lbs)
Installation torque:	14 - 16 Nm (10 - 12 ft-lb)
Contamination class to ISO 4406:	See technical spec.
MTTFd:	150 - 1200 years: See technical spec.

NOTES

For other configurations/quick codes not available in this catalogue page please consult factory

CURVES

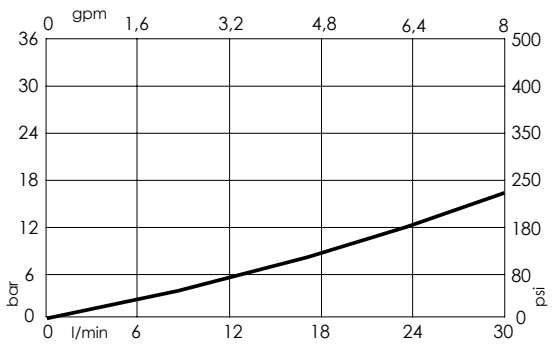

ORDERING CODES

Quick code	Description	
CD000045	CDSN-030-SSNS-FN-079-N000	

Revision A1

LOGIC ELEMENT

CDLN-040-CCTC

DIRECT ACTING
SPOOL TYPE

ATLANTIC Fluid Tech
WWW.SUMY.IR

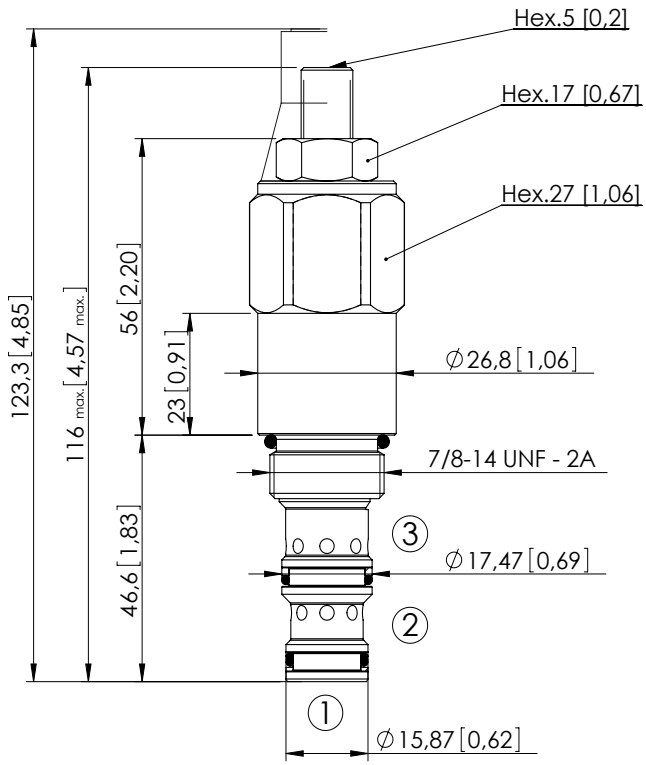

Dimensions: mm [inches]

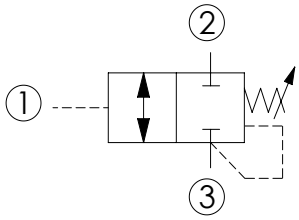

SPECIFICATIONS

Max. operating pressure:	350 bar (5000 psi)
Rated flow:	40 l/min (11 gpm)
Cavity:	SAE-10-3N
Weight:	0.29 kg (0,64 lbs)
Contamination class to ISO 4406:	See technical spec.
Seal kit:	RB700092
Installation torque:	55 - 62 Nm (41 - 46 ft-lb)
MTTFd:	150 - 1200 years: See technical spec.

NOTES

Pressure in port 3 is additive to setting 1:1. For back pressure compensated valve consult CDLN-040-CCVC data sheet. No O-ring on 1.

For other configurations/quick codes not available in this catalogue page please consult factory

OPTIONS

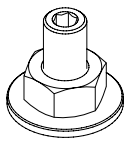

Adjustment with Screw

SEALING CAP

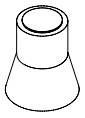

Ordering code: AT000022

CURVES

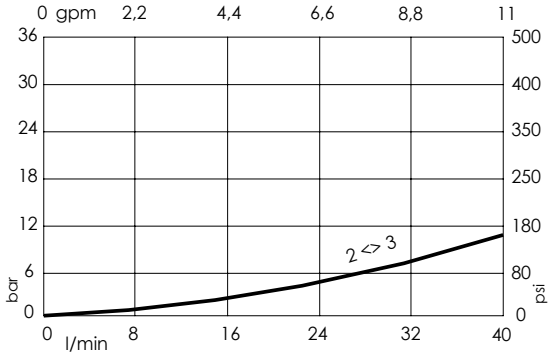

ORDERING CODES

Quick code	Description	Standard setting Q=5 l/min (1,3 gpm)	Adjustment range	Pressure increase	Option
CD000121	CDLN-040-CCTC-HN-S10-N060	30 bar (400 psi)	10-60 bar (150-850 psi)	11 bar/turn (150 psi/turn)	Adjustment with Screw

Revision A1

LOGIC ELEMENT

CDLN-040-CCTE

DIRECT ACTING
SPOOL TYPE

ATLANTIC Fluid Tech
WWW.SUMY.IR

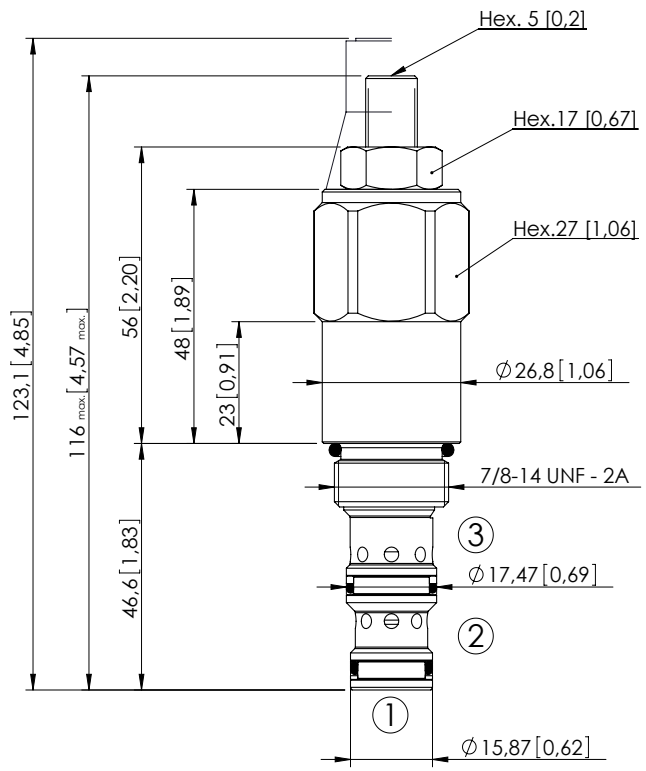

Dimensions: mm [inches]

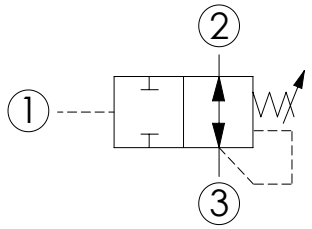

SPECIFICATIONS

Max. operating pressure:	350 bar (5000 psi)
Rated flow:	40 l/min (11 gpm)
Cavity:	SAE-10-3N
Weight:	0.29 kg (0,64 lbs)
Contamination class to ISO 4406:	See technical spec.
Seal kit:	RB700092
Installation torque:	55 - 62 Nm (41 - 46 ft-lb)
MTTFd:	150 - 1200 years: See technical spec.

NOTES

Pressure in port 3 is additive to setting 1:1. For back pressure compensated valve consult CDLN-040-CCVE data sheet. No O-ring on 1.
For other configurations/quick codes not available in this catalogue page please consult factory

OPTIONS

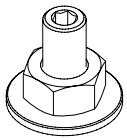

Adjustment with Screw

SEALING CAP

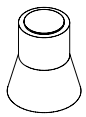

Ordering code:
AT000022

CURVES

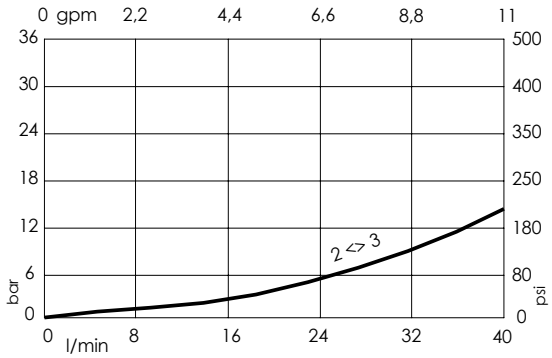

ORDERING CODES

Quick code	Description	Standard setting Q=5 l/min (1,3 gpm)	Adjustment range	Pressure increase	Option
CD000123	CDLN-040-CCTE-HN-S10-N060	30 bar (400 psi)	10-60 bar (150-850 psi)	11 bar/turn (150 psi/turn)	Adjustment with Screw

Revision A1

LOGIC ELEMENT

CDLN-040-CCVC

SPOOL TYPE - VENTED
EXTERNAL PILOT

ATLANTIC Fluid Tech
WWW.SUMY.IR

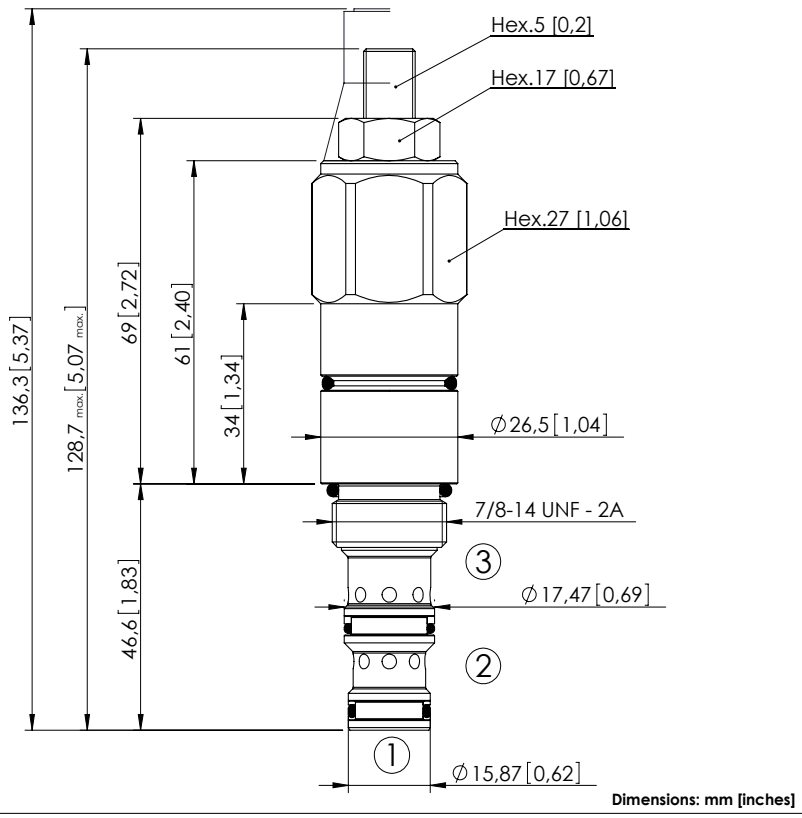

Dimensions: mm [inches]

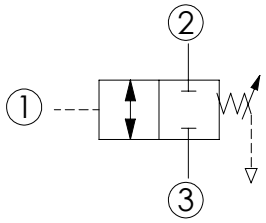

SPECIFICATIONS

Max. operating pressure:	350 bar (5000 psi)
Rated flow:	40 l/min (11 gpm)
Cavity:	SAE-10-3N
Weight:	0,33 kg (0,73 lbs)
Contamination class to ISO 4406:	See technical spec.
Seal kit:	RB700092
Installation torque:	60 - 75 Nm (44 - 55 ft-lb)
MTTFd:	150 - 1200 years: See technical spec.

NOTES

For other configurations/quick codes not available in this catalogue page please consult factory

OPTIONS

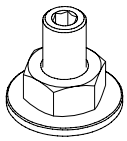

Adjustment with Screw

SEALING CAP

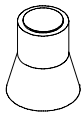

Ordering code: AT000022

CURVES

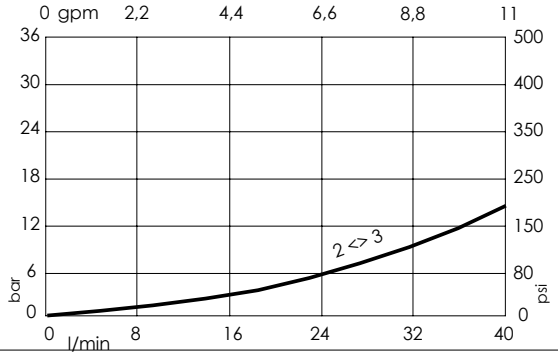

ORDERING CODES

Quick code	Description	Standard setting Q=5 l/min (1,3 gpm)	Adjustment range	Pressure increase	Option
CD000119	CDLN-040-CCVC-HN-S10-N180	120 bar (1700 psi)	22-180 bar (300-2600 psi)	22 bar/turn (300 psi/turn)	Adjustment with Screw
CD000120	CDLN-040-CCVC-HN-S10-N070	50 bar (700 psi)	7-70 bar (100-1050 psi)	7 bar/turn (100 psi/turn)	Adjustment with Screw

Revision A1

LOGIC ELEMENT

CDLN-040-CCVE

SPOOL TYPE - VENTED
EXTERNAL PILOT

ATLANTIC Fluid Tech
WWW.SUMY.IR

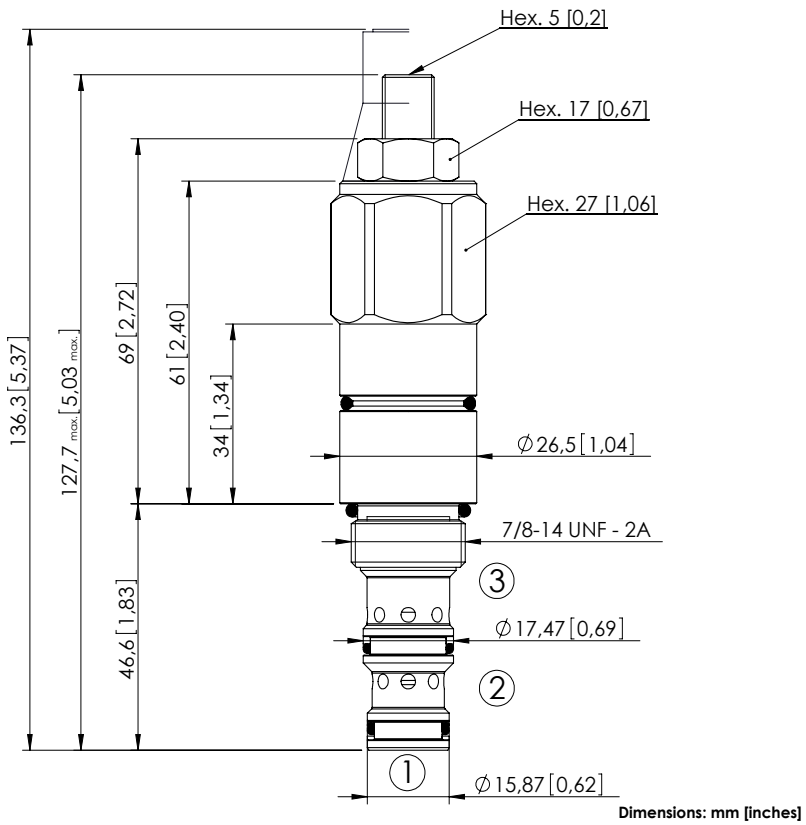

Dimensions: mm [inches]

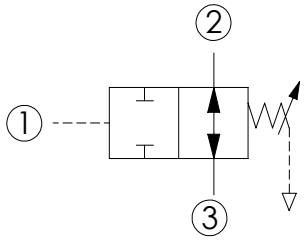

SPECIFICATIONS

Max. operating pressure:	350 bar (5000 psi)
Rated flow:	40 l/min (11 gpm)
Cavity:	SAE-10-3N
Weight:	0,33 kg (0,73 lbs)
Contamination class to ISO 4406:	See technical spec.
Seal kit:	RB700092
Installation torque:	55 - 62 Nm (41 - 46 ft-lb)
MTTFd:	150 - 1200 years: See technical spec.

NOTES

For other configurations/quick codes not available in this catalogue page please consult factory

OPTIONS

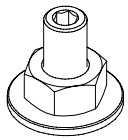

Adjustment with Screw

SEALING CAP

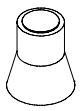

Ordering code: AT000021

CURVES

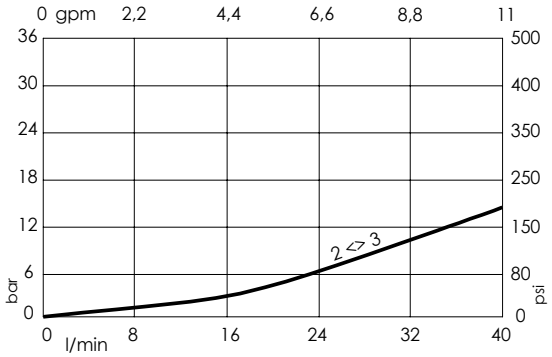

ORDERING CODES

Quick code	Description	Standard setting Q=5 l/min (1,3 gpm)	Adjustment range	Pressure increase	Option
CD000122	CDLN-040-CCVE-HN-S10-N180	120 bar (1700 psi)	50-180 bar (720-2600 psi)	22 bar/turn (300 psi/turn)	Adjustment with Screw
CD000214	CDLN-040-CCVE-HN-S10-N100	50 bar (700 psi)	20-80 bar (290-1200 psi)	7 bar/turn (100 psi/turn)	Adjustment with Screw

Revision A1

LOGIC ELEMENT

CDLN-150-CCTB

DIRECT ACTING
SPOOL TYPE

ATLANTIC Fluid Tech
WWW.SUMY.IR

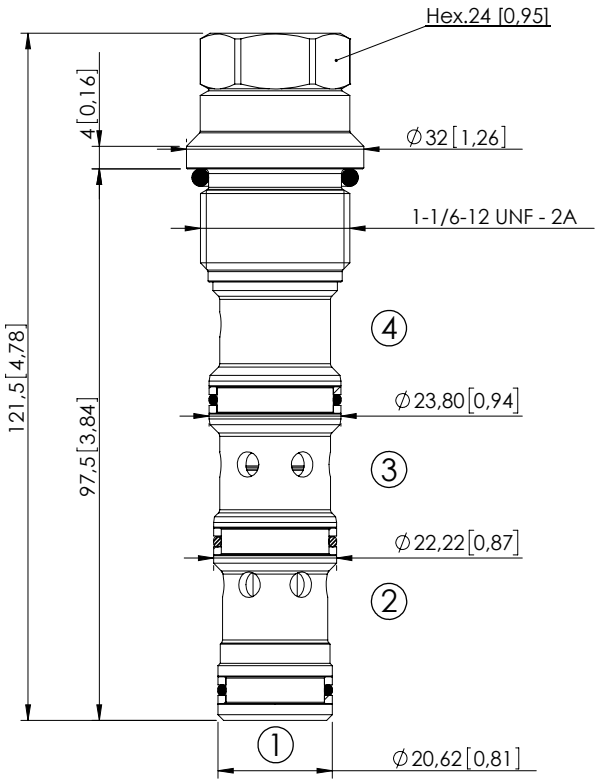

Dimensions: mm [inches]

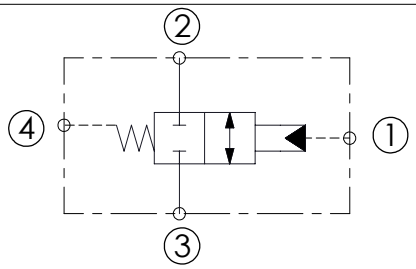

SPECIFICATIONS

Max. operating pressure:	350 bar (5000 psi)
Rated flow:	150 l/min (40 gpm)
Cavity:	SAE-12-4N
Weight:	0,33 kg (0,73 lbs)
Installation torque:	110 - 120 Nm (81 - 89 ft-lb)
Seal kit:	RB700103
Contamination class to ISO 4406:	See technical spec.
MTTFd:	150 - 1200 years: See technical spec.

NOTES

For other configurations/quick codes not available in this catalogue page please consult factory

CURVES

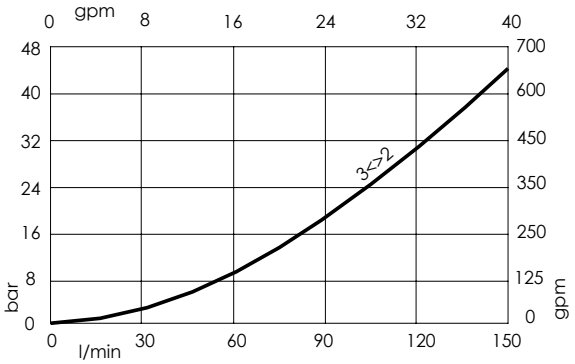

ORDERING CODES

Quick code	Description	Cracking pressure	
CD000105	CDLN-150-CDTB-FN-S12-N007	7,5 bar (0/+2) (100 psi (0/+25))	

Revision A1

LOGIC ELEMENT

CDLN-040-CDTK

DIRECT ACTING
SPOOL TYPE

ATLANTIC Fluid Tech
WWW.SUMY.IR

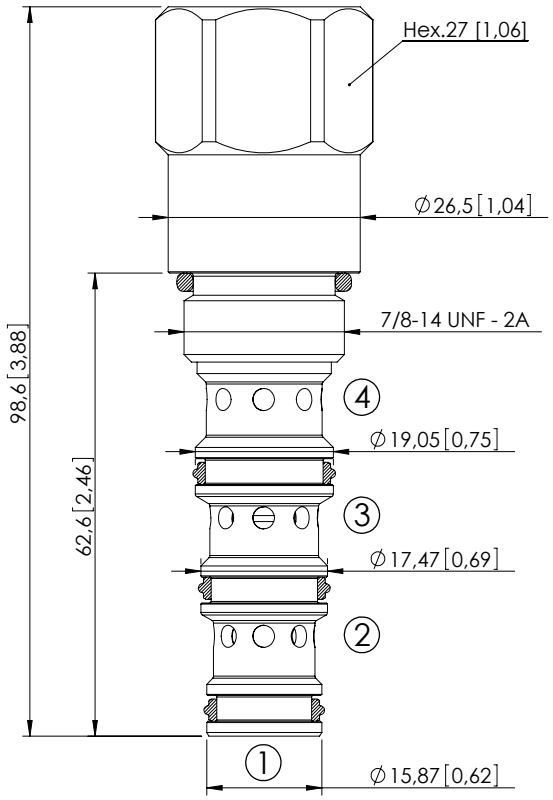

Dimensions: mm [inches]

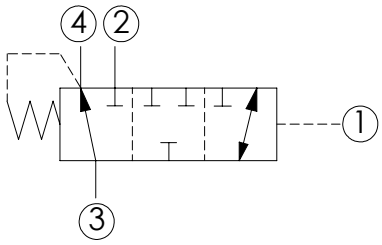

SPECIFICATIONS

Max. operating pressure:	350 bar (5000 psi)
Rated flow:	40 l/min (11 gpm)
Cavity:	SAE-10-4N
Weight:	0,23 kg (0,51 lbs)
Installation torque:	55-62 Nm (41-46 ft-lb)
Seal kit:	RB700102
Internal leakage:	50 cc/min 3,05 in³/min
Contamination class to ISO 4406:	See technical spec.
MTTFd:	150 - 1200 years: See technical spec.

NOTES

For other configurations/quick codes not available in this catalogue page please consult factory

CURVES

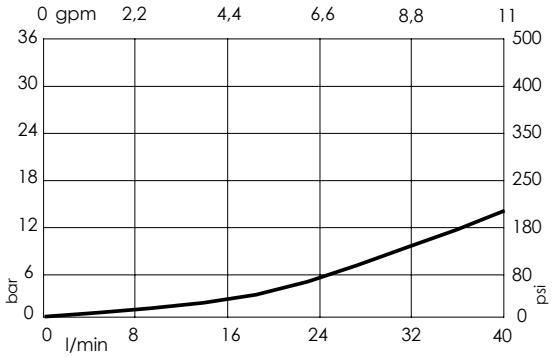

ORDERING CODES

Quick code	Description	Cracking pressure	
CD000300	CDLN-040-CDTK-FN-S10-N003	3 bar ±1 (50 psi ±15)	
CD000487	CDLN-040-CDTK-FN-S10-N005	5 bar ±1 (75 psi ±15)	
CD000260	CDLN-040-CDTK-FN-S10-N011	11 bar ±1 (150 psi ±15)	

Revision B1

LOGIC ELEMENT

CDLN-040-CDTH

DIRECT ACTING
SPOOL TYPE

ATLANTIC Fluid Tech
WWW.SUMY.IR

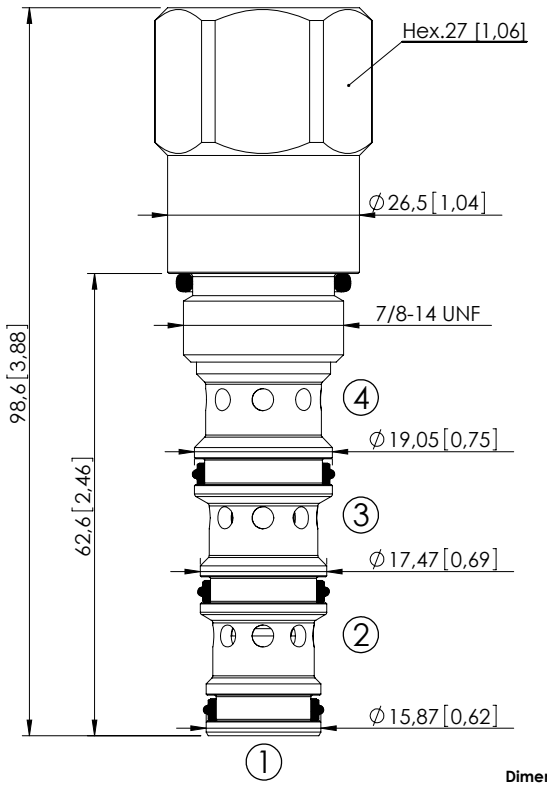

Dimensions: mm [inches]

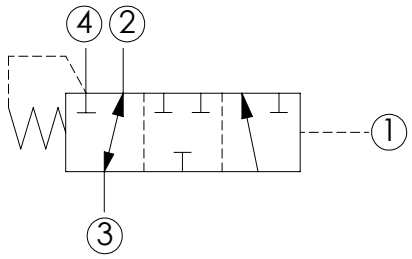

SPECIFICATIONS

Max. operating pressure:	350 bar (5000 psi)
Rated flow:	40 l/min (11 gpm)
Cavity:	SAE-10-4N
Weight:	0,23 kg (0,51 lbs)
Installation torque:	55 - 62 Nm (41 - 46 ft-lb)
Seal kit:	RB700102
Internal leakage:	50 cc/min 3,05 in³/min
Contamination class to ISO 4406:	See technical spec.
MTTFd:	150 - 1200 years: See technical spec.

NOTES

For other configurations/quick codes not available in this catalogue page please consult factory

CURVES

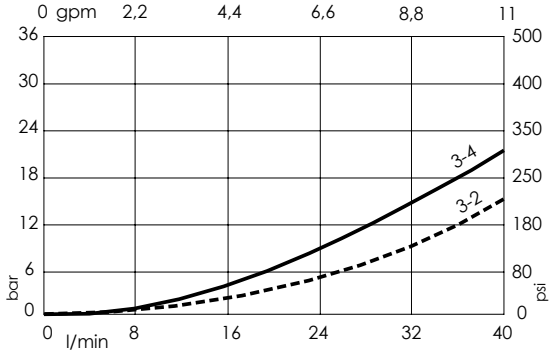

ORDERING CODES

Quick code	Description	Cracking pressure	
CD000377	CDLN-040-CDTH-FN-S10-N003	3 bar ±1 (50 psi ±15)	
CD000261	CDLN-040-CDTH-FN-S10-N011	11 bar ±1 (150 psi ±15)	
CD000343	CDLN-040-CDTH-FH-S10-N015	15 bar ±1 (200 psi ±15)	
CD000276	CDLN-040-CDTH-FH-S10-N030	30 bar ±1 (400 psi ±15)	
CD000262	CDLN-040-CDTH-FH-S10-N050	50 bar ±1 (700 psi ±15)	

Revision A1

LOGIC ELEMENT

CDLN-040-CDPB

DIRECT ACTING
SPOOL TYPE

ATLANTIC Fluid Tech
WWW.SUMY.IR

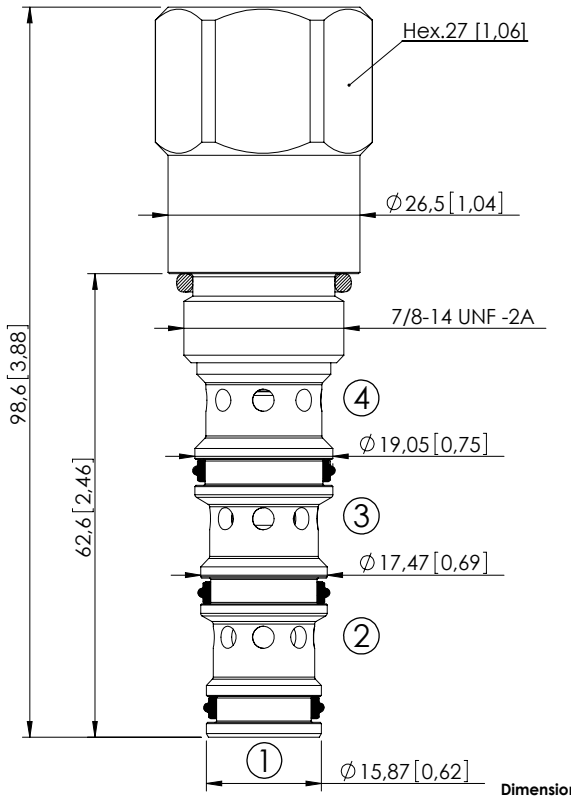

Dimensions: mm [inches]

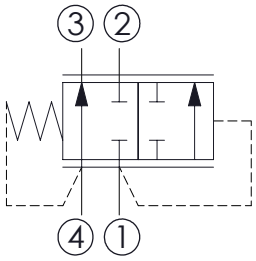

SPECIFICATIONS

Max. operating pressure:	350 bar (5000 psi)
Rated flow:	40 l/min (11 gpm)
Cavity:	SAE-10-4N
Weight:	0,23 kg (0,51 lbs)
Installation torque:	55 - 62 Nm (41 - 46 ft-lb)
Seal kit:	RB700102
Internal leakage:	50 cc/min 3,05 in³/min
Contamination class to ISO 4406:	See technical spec.
MTTFd:	150 - 1200 years: See technical spec.

NOTES

For other configurations/quick codes not available in this catalogue page please consult factory

CURVES

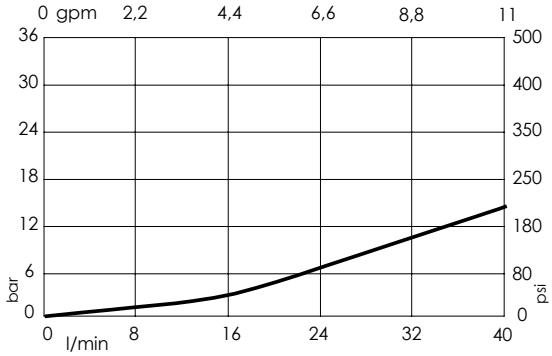

ORDERING CODES

Quick code	Description	Cracking pressure	
CD000295	CDLN-040-CDPB-FH-S10-N005	5 bar ±0,5 (75 psi ±10)	
CD000296	CDLN-040-CDPB-FH-S10-N011	11,5 bar ±0,5 (170 psi ±15)	

Revision B1

LOGIC ELEMENT

CDLN-120-CDPB

DIRECT ACTING
SPOOL TYPE

ATLANTIC Fluid Tech
WWW.SUMY.IR

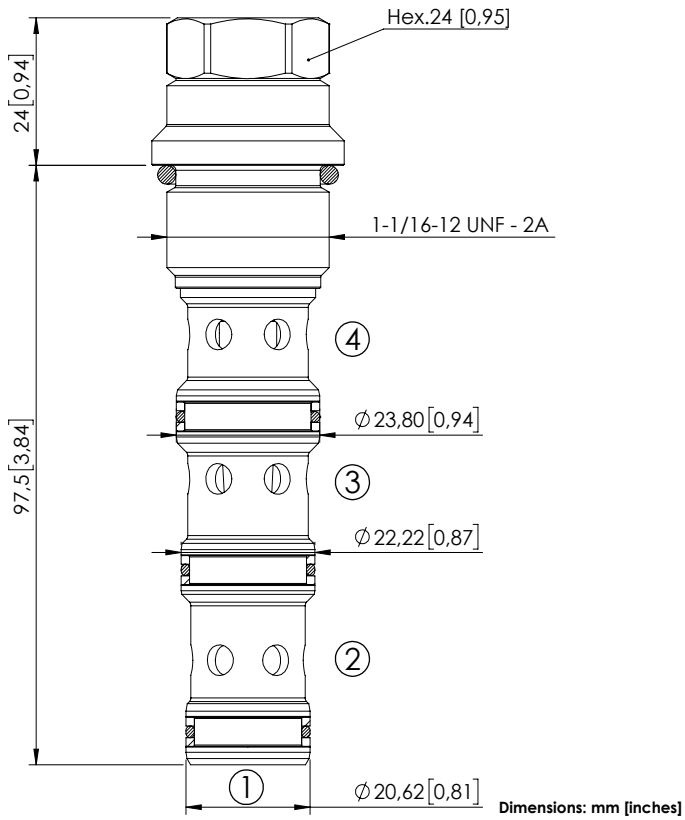

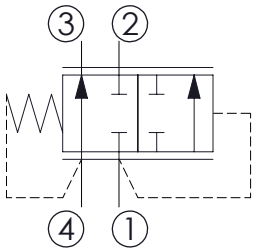

SPECIFICATIONS

Max. operating pressure:	350 bar (5000 psi)
Rated flow:	120 l/min (32 gpm)
Cavity:	SAE-12-4N
Weight:	0,3 kg (0,69 lbs)
Installation torque:	110 - 120 Nm (81 - 86 ft-lb)
Seal kit:	RB700103
Contamination class to ISO 4406:	See technical spec.
MTTFd:	150 - 1200 years: See technical spec.

NOTES

For other configurations/quick codes not available in this catalogue page please consult factory

CURVES

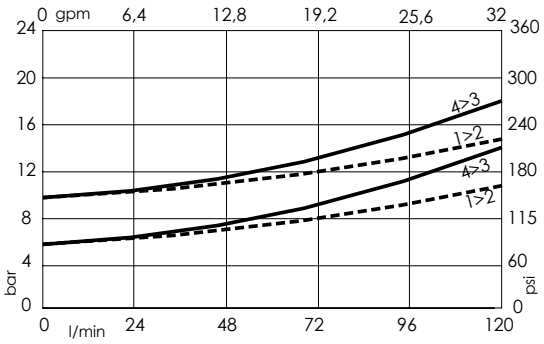

ORDERING CODES

Quick code	Description	Cracking pressure	
CD000336	CDLN-120-CDPB-FH-S12-N010	10 bar (150 psi)	
CD000637	CDLN-120-CDPB-FH-S12-N006	6 bar (90 psi)	

Revision A1

LOGIC ELEMENT

CDLN-100-CCPC

NORMALLY CLOSED
SPOOL TYPE

ATLANTIC Fluid Tech
WWW.SUMY.IR

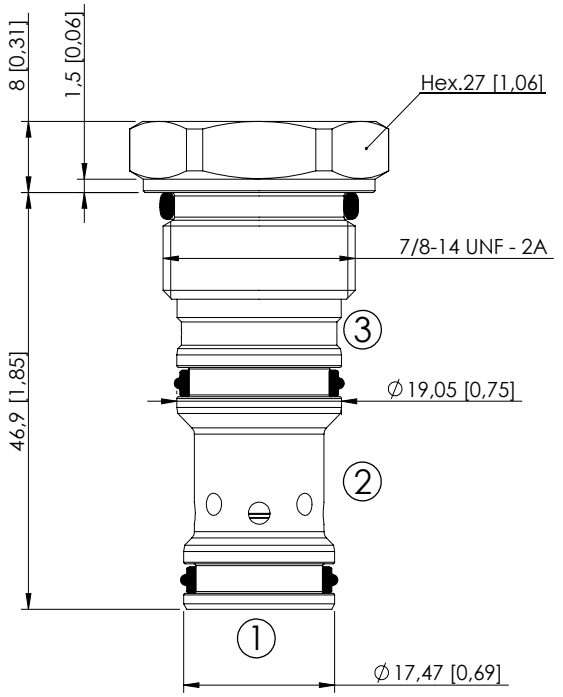

Dimensions: mm [inches]

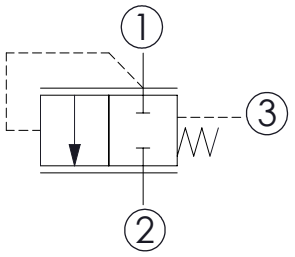

SPECIFICATIONS

Max. operating pressure:	350 bar (5000 psi)
Rated flow:	100 l/min (26,5 gpm)
Cavity:	SAE-10-3C/SAE-10-3S
Weight:	0,11 kg (0,24 lbs)
Spool:	Ø10 mm [0,39]
Seal kit:	RB600087
Installation torque:	55 - 62 Nm (41 - 46 ft-lb)
Contamination class to ISO 4406:	See technical spec.
MTTFd:	150 - 1200 years: See technical spec.

NOTES

For other configurations/quick codes not available in this catalogue page please consult factory

CURVES

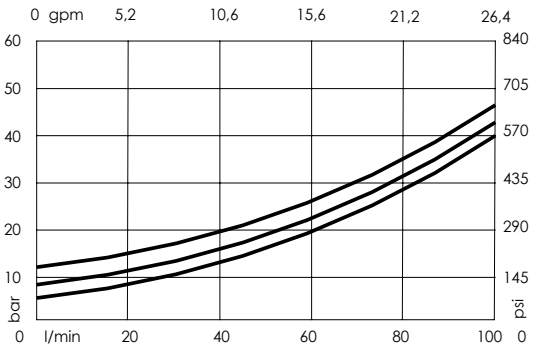

ORDERING CODES

Quick code	Description	Cracking pressure	
CD000505	CDLN-100-CCPC-14-S10-N005	5 bar (75 psi)	
CD000506	CDLN-100-CCPC-14-S10-N008	8 bar (120 psi)	
CD000507	CDLN-100-CCPC-14-S10-N012	12 bar (170 psi)	

Revision A

LOGIC ELEMENT

CDLN-100-CCRC

NORMALLY CLOSED
SPOOL TYPE
ADJUSTABLE SETTING

ATLANTIC Fluid Tech
WWW.SUMY.IR

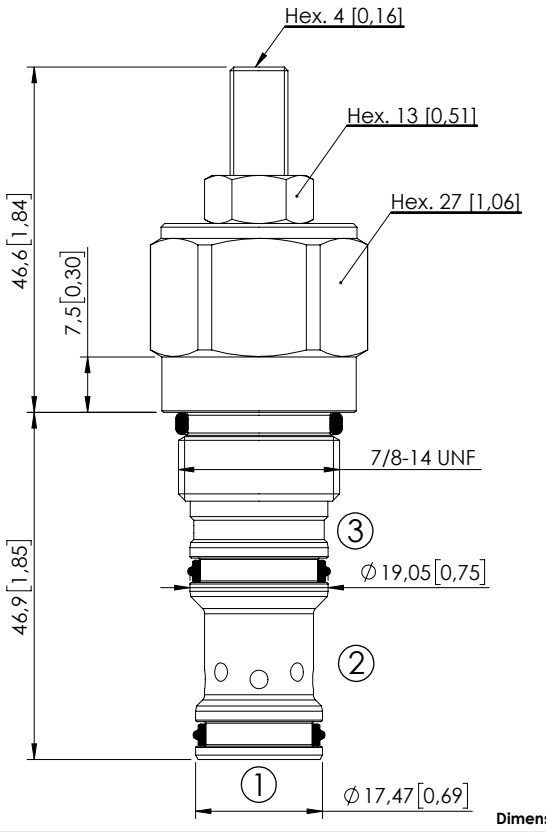

Dimensions: mm [inches]

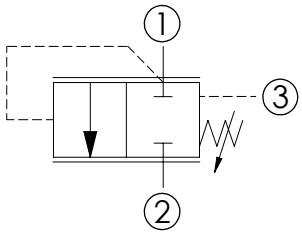

SPECIFICATIONS

Max. operating pressure:	350 bar (5000 psi)
Rated flow:	100 l/min (26 gpm)
Cavity:	SAE-10-3C/SAE-10-3S
Weight:	0,2 kg (0,44 lbs)
Spool:	Ø10 mm [0,39]
Installation torque:	55 - 62 Nm (41 - 46 ft-lb)
Seal kit:	RB600087
Contamination class to ISO 4406:	See technical spec.
MTTFd:	150 - 1200 years: See technical spec.

NOTES

For sealing, please contact AFT.

For other configurations/quick codes not available in this catalogue page please consult factory

CURVES

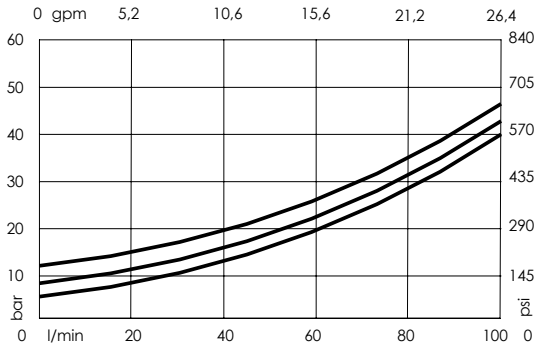

ORDERING CODES

Quick code	Description	Cracking pressure	Adjustment range	Pressure increase
CD000508	CDLN-100-CCRC-05-S10-H005	2,5 bar (35 psi)	1,5 - 5 bar (20-75 psi)	0,5 bar/turn (7 psi/turn)
CD000509	CDLN-100-CCRC-05-S10-H008	8 bar (120 psi)	2,5 - 8 bar (35-120 psi)	0,8 bar/turn (11 psi/turn)
CD000510	CDLN-100-CCRC-05-S10-H012	12 bar (170 psi)	4,5 - 12 bar (65-170 psi)	1 bar/turn (15 psi/turn)

Revision A1

LOGIC ELEMENT

CDLN-160-SCTC

NORMALLY CLOSED
SPOOL TYPE

ATLANTIC Fluid Tech
WWW.SUMY.IR

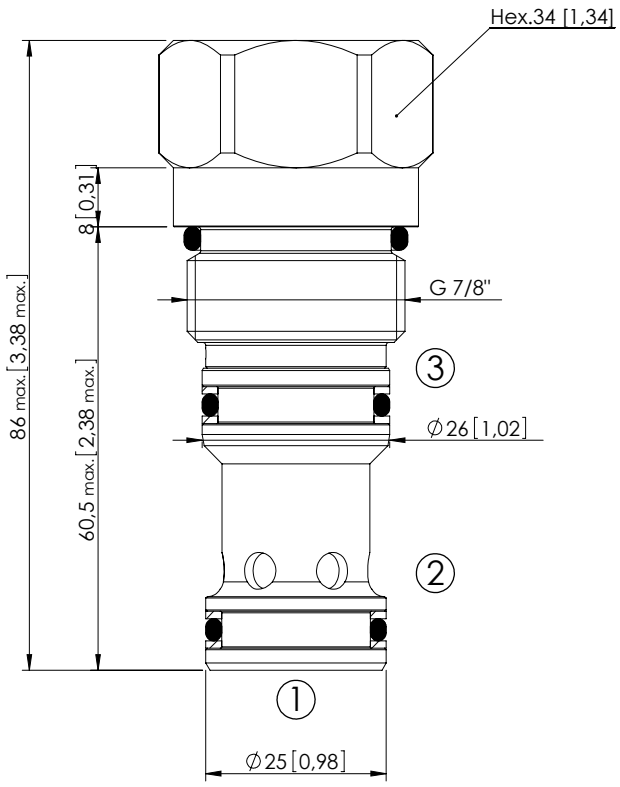

Dimensions: mm [inches]

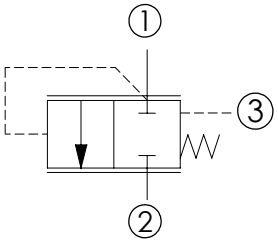

SPECIFICATIONS

Max. operating pressure:	350 bar (5000 psi)
Rated flow:	160 l/min (42 gpm)
Cavity:	VP000065
Weight:	0,33 kg (0,73 lbs)
Spool:	Ø16 mm [0,63]
Installation torque:	135 - 145 Nm (100 - 107 ft-lb)
Seal kit:	RD900065
Contamination class to ISO 4406:	See technical spec.
MTTFd:	150 - 1200 years: See technical spec.

NOTES

Parts in body compensator

For other configurations/quick codes not available in this catalogue page please consult factory

CURVES

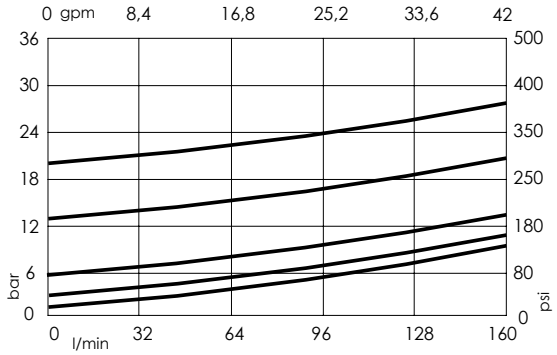

ORDERING CODES

Quick code	Description	Cracking pressure
CD000158	CDLN-160-SCTC-14-065-N000	0,4 bar (5 psi)
CD000076	CDLN-160-SCTC-14-065-N002	2 bar (25 psi)
CD000051	CDLN-160-SCTC-14-065-N005	5,5 bar (75 psi)
CD000147	CDLN-160-SCTC-14-065-N012	12,5 bar (180 psi)
CD000248	CDLN-160-SCTC-14-065-N020	20,5 bar (300 psi)

Revision A1

LOGIC ELEMENT

CDLN-300-SCTC

NORMALLY CLOSED
SPOOL TYPE

ATLANTIC Fluid Tech
WWW.SUMY.IR

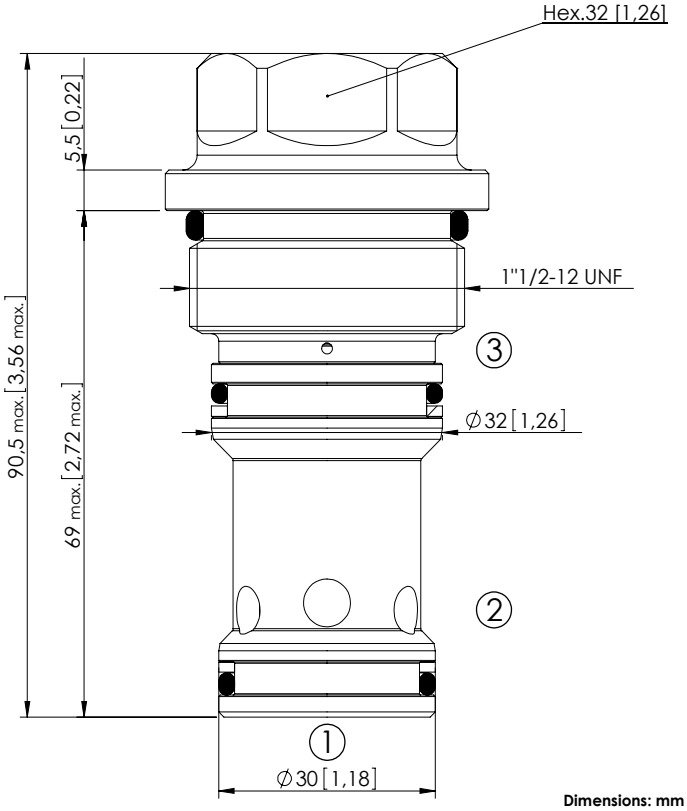

Dimensions: mm [inches]

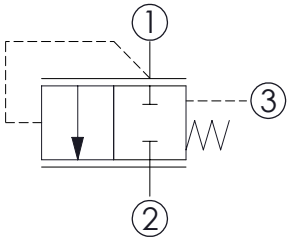

SPECIFICATIONS

Max. operating pressure:	350 bar (5000 psi)
Rated flow:	300 l/min (79 gpm)
Cavity:	VP000058
Weight:	0,47 kg (1,03 lbs)
Spool:	Ø19 mm [0,75]
Installation torque:	280 - 300 Nm (207 - 221 ft-lb)
Seal kit:	RC700058
Contamination class to ISO 4406:	See technical spec.
MTTFd:	150 - 1200 years: See technical spec.

NOTES

Parts in body compensator
For other configurations/quick codes not available in this catalogue page please consult factory

CURVES

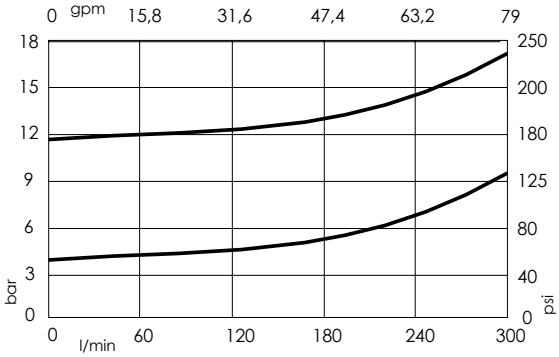

ORDERING CODES

Quick code	Description	Cracking pressure	
CD000096	CDLN-300-SCTC-14-058-N004	4 bar (50 psi)	
CD000311	CDLN-300-SCTC-14-058-N012	11,5 bar (180 psi)	

Revision A1

LOGIC ELEMENT

CDLN-500-SCTC

NORMALLY CLOSED
SPOOL TYPE

ATLANTIC Fluid Tech
WWW.SUMY.IR

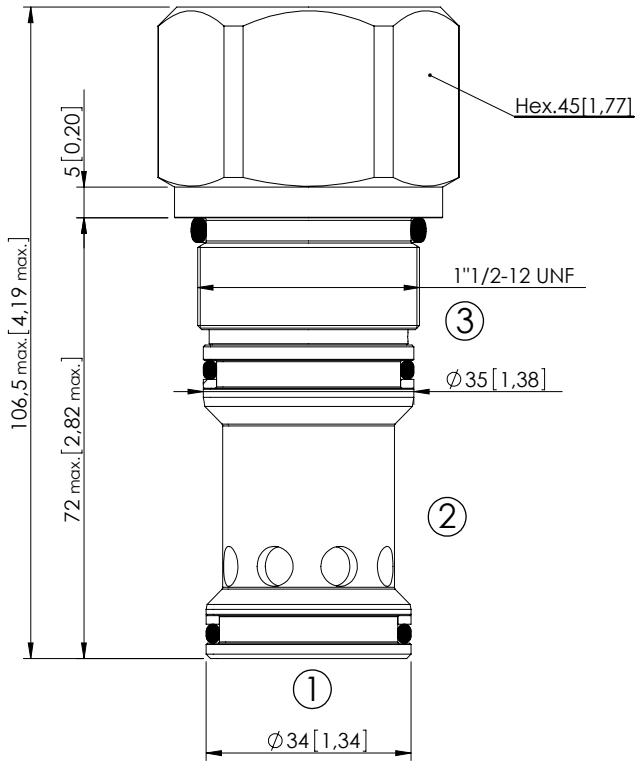

Dimensions: mm [inches]

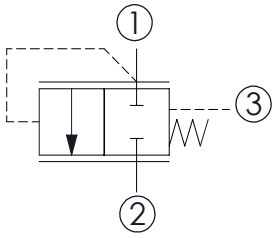

SPECIFICATIONS

Max. operating pressure:	350 bar (5000 psi)
Rated flow:	500 l/min (132 gpm)
Cavity:	VP000178
Weight:	0,75 kg (1,65 lbs)
Spool:	Ø22 mm [0,87]
Installation torque:	280 - 300 Nm (207 - 221 ft-lb)
Seal kit:	RC700178
Contamination class to ISO 4406:	See technical spec.
MTTFd:	150 - 1200 years: See technical spec.

NOTES

Parts in body compensator

For other configurations/quick codes not available in this catalogue page please consult factory

CURVES

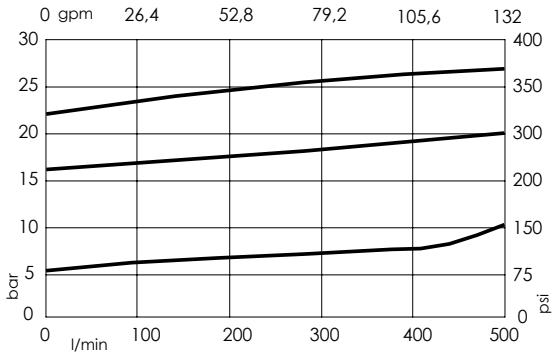

ORDERING CODES

Quick code	Description	Cracking pressure	
CD000053	CDLN-500-SCTC-14-178-N005	5 bar (75 psi)	
CD000255	CDLN-500-SCTC-14-178-N017	17 bar (250 psi)	
CD000308	CDLN-500-SCTC-14-178-N023	23 bar (350 psi)	

Revision A1

LOGIC ELEMENT

CDLN-100-CCPC

NORMALLY CLOSED
SPOOL TYPE

ATLANTIC Fluid Tech
WWW.SUMY.IR

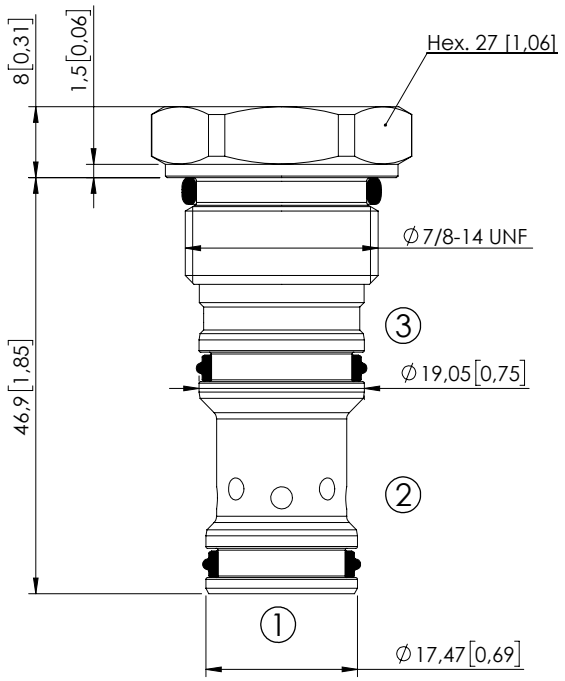

Dimensions: mm [inches]

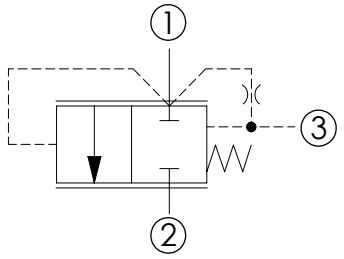

SPECIFICATIONS

Max. operating pressure:	350 bar (5000 psi)
Rated flow:	100 l/min (26 gpm)
Cavity:	SAE-10-3C
Weight:	0,11 kg (0,24 lbs)
Spool:	Ø10 mm [0,39]
Seal kit:	RB600087
Installation torque:	55 - 62 Nm (41 - 46 ft-lb)
Contamination class to ISO 4406:	See technical spec.
MTTFd:	150 - 1200 years: See technical spec.

NOTES

For other configurations/quick codes not available in this catalogue page please consult factory

CURVES

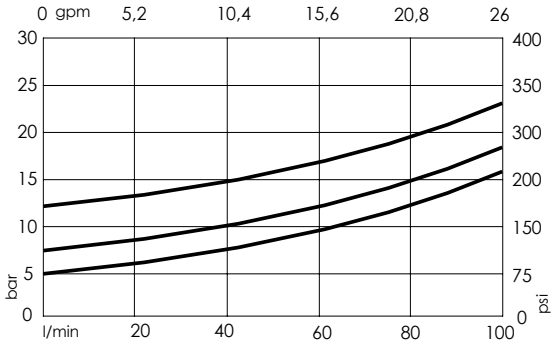

ORDERING CODES

Quick code	Description	Cracking pressure	
CD000511	CDLN-100-CCPC-13-S10-N005	5 bar (75 psi)	
CD000512	CDLN-100-CCPC-13-S10-N008	8 bar (120 psi)	
CD000513	CDLN-100-CCPC-13-S10-N012	12 bar (170 psi)	

Revision A1

LOGIC ELEMENT

CDLN-100-CCRC

NORMALLY CLOSED
SPOOL TYPE
ADJUSTABLE SETTING

ATLANTIC Fluid Tech
WWW.SUMY.IR

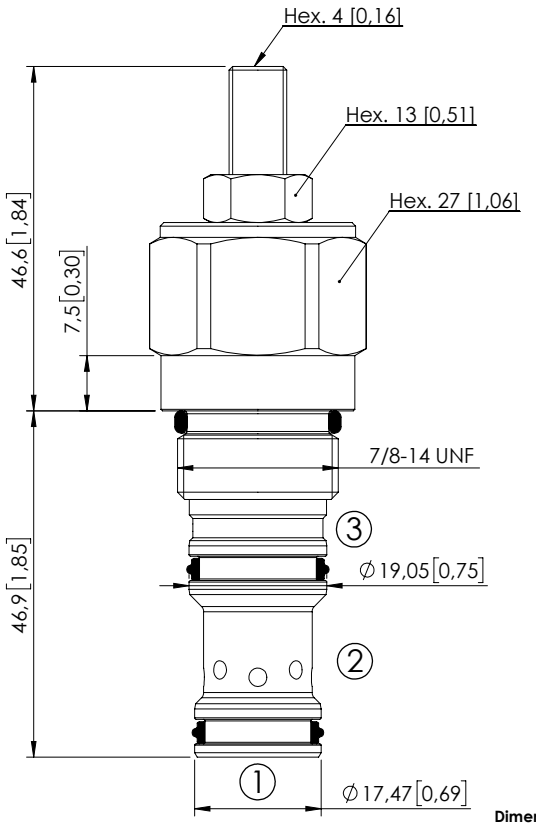

Dimensions: mm [inches]

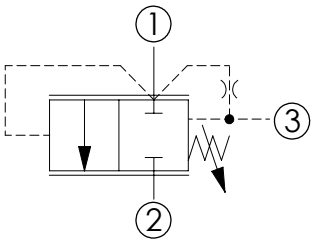

SPECIFICATIONS

Max. operating pressure:	350 bar (5000 psi)
Rated flow:	100 l/min (26 gpm)
Cavity:	SAE-10-3C
Weight:	0,2 kg (0,44 lbs)
Spool:	Ø10 mm [0,39]
Installation torque:	55 - 62 Nm (41 - 46 ft-lb)
Seal kit:	RB600087
Contamination class to ISO 4406:	See technical spec.
MTTFd:	150 - 1200 years: See technical spec.

NOTES

For sealing, please contact AFT.

For other configurations/quick codes not available in this catalogue page please consult factory

CURVES

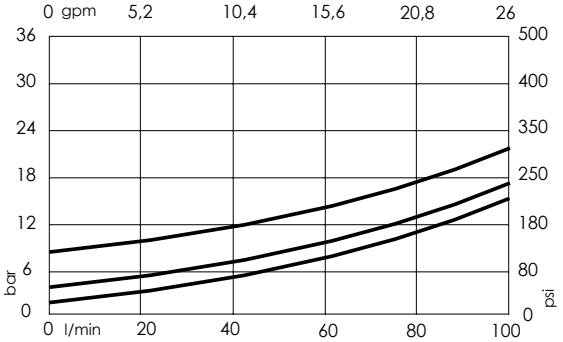

ORDERING CODES

Quick code	Description	Cracking pressure	Adjustment range	Pressure increase
CD000514	CDLN-100-CCRC-38-S10-H005	2,5 bar (35 psi)	1,5 - 5 bar (20-75 psi)	0,5 bar/turn (7 psi/turn)
CD000515	CDLN-100-CCRC-38-S10-H008	4 bar (50 psi)	2,5 - 8 bar (35-120 psi)	0,8 bar/turn (12 psi/turn)
CD000516	CDLN-100-CCRC-38-S10-H012	8 bar (120 psi)	4,5 - 12 bar (65-170 psi)	1 bar/turn (15 psi/turn)

Revision A1

LOGIC ELEMENT

CDLN-160-SCTD

NORMALLY CLOSED
SPOOL TYPE
INTERNAL ORIFICE

ATLANTIC Fluid Tech
WWW.SUMY.IR

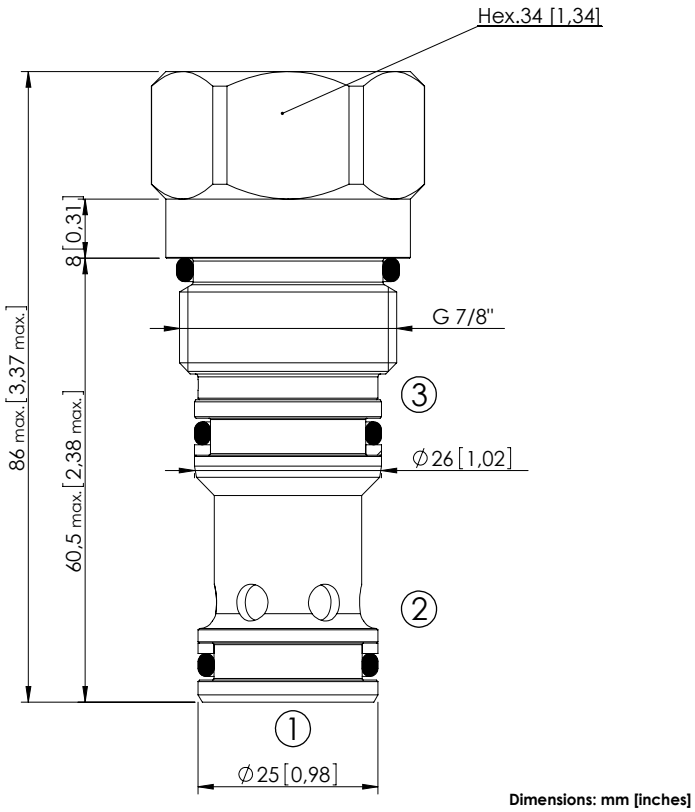

Dimensions: mm [inches]

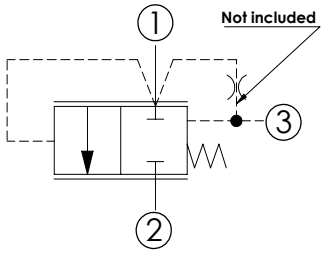

SPECIFICATIONS

Max. operating pressure:	350 bar (5000 psi)
Rated flow:	160 l/min (42 gpm)
Cavity:	VP000065
Weight:	0,32 kg (0,71 lbs)
Spool:	Ø16 mm [0,63]
Installation torque:	135 - 145 Nm (100 - 107 ft-lb)
Internal orifice:	M6 thread
Seal kit:	RC900065
Contamination class to ISO 4406:	See technical spec.
MTTFd:	150 - 1200 years: See technical spec.

NOTES

Parts in body compensator

For other configurations/quick codes not available in this catalogue page please consult factory

CURVES

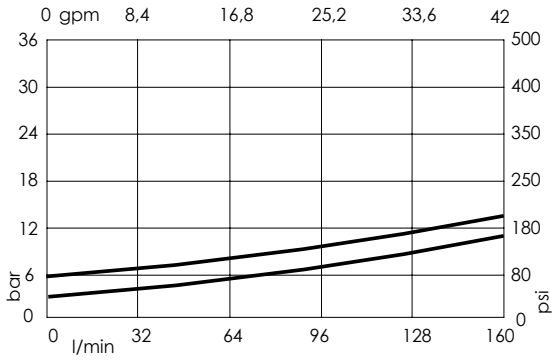

ORDERING CODES

Quick code	Description	Cracking pressure	
CD000081	CDLN-160-SCTD-13-065-N002	2 bar (25 psi)	
CD000066	CDLN-160-SCTD-13-065-N006	6 bar (80 psi)	
CD000003	CDLN-160-SCTD-13-065-N012	12 bar (180 psi)	
CD000004	CDLN-160-SCTD-13-065-N016	16 bar (240 psi)	

Revision B1

LOGIC ELEMENT

CDLN-300-SCTD

NORMALLY CLOSED
SPOOL TYPE
INTERNAL ORIFICE

ATLANTIC Fluid Tech
WWW.SUMY.IR

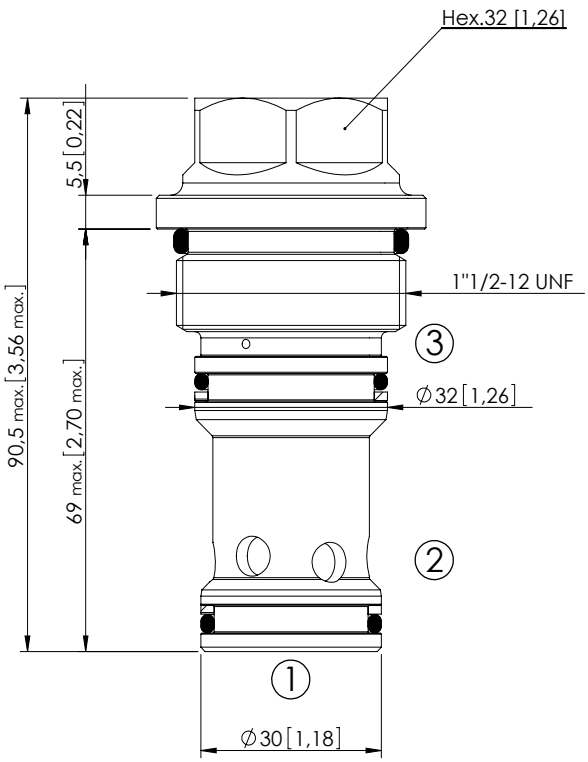

Dimensions: mm [inches]

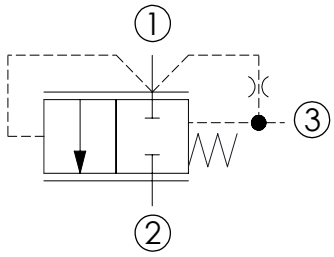

SPECIFICATIONS

Max. operating pressure:	350 bar (5000 psi)
Rated flow:	300 l/min (79 gpm)
Cavity:	VP000058
Weight:	0,45 kg (1 lbs)
Spool:	Ø19 mm [0,75]
Installation torque:	280 - 300 Nm (207 - 221 ft-lb)
Internal orifice:	M6 thread
Seal kit:	RC700058
Contamination class to ISO 4406:	See technical spec.
MTTFd:	150 - 1200 years: See technical spec.

NOTES

Parts in body compensator

For other configurations/quick codes not available in this catalogue page please consult factory

CURVES

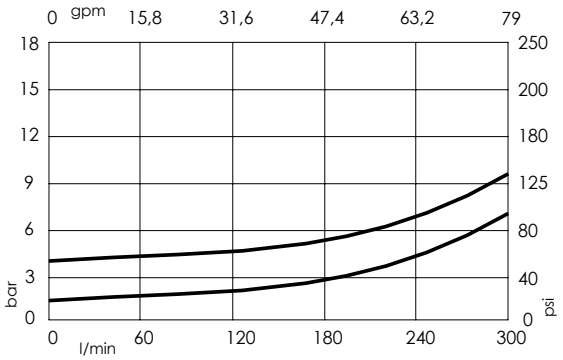

ORDERING CODES

Quick code	Description	Cracking pressure	
CD000095	CDLN-300-SCTD-13-058-N001	1,5 bar (25 psi)	
CD000110	CDLN-300-SCTD-13-058-N004	4 bar (50 psi)	

Revision A1

LOGIC ELEMENT

CDLN-500-SCTD

NORMALLY CLOSED
SPOOL TYPE
INTERNAL ORIFICE

ATLANTIC Fluid Tech
WWW.SUMY.IR

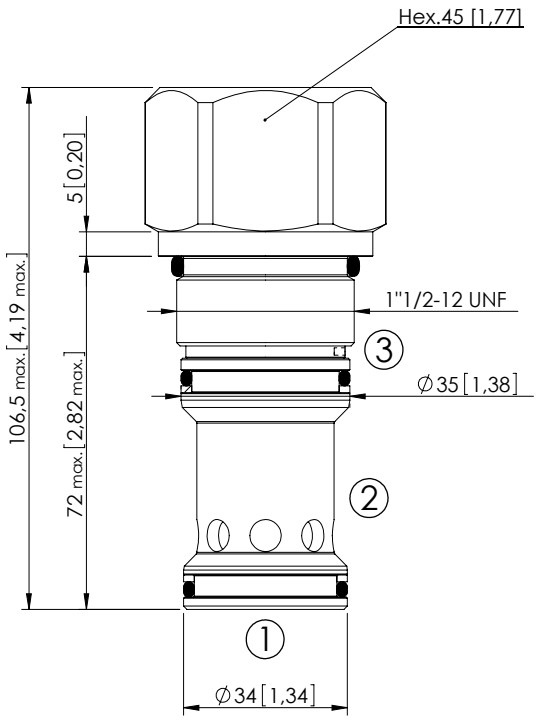

Dimensions: mm [inches]

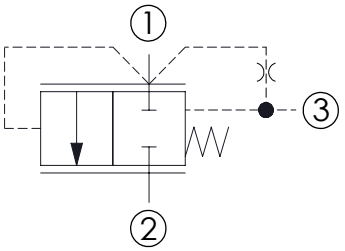

SPECIFICATIONS

Max. operating pressure:	350 bar (5000 psi)
Rated flow:	500 l/min (132 gpm)
Cavity:	VP000178
Weight:	0,74 kg (1,63 lbs)
Spool:	Ø22 mm [0,87]
Installation torque:	280 - 300 Nm (207-221 ft-lb)
Internal orifice:	M6 thread
Seal kit:	RC700178
Contamination class to ISO 4406:	See technical spec.
MTTFd:	150 - 1200 years: See technical spec.

NOTES

Parts in body compensator

For other configurations/quick codes not available in this catalogue page please consult factory

CURVES

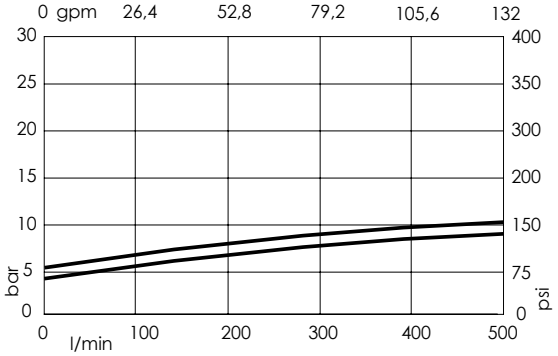

ORDERING CODES

Quick code	Description	Cracking pressure	
CD000067	CDLN-500-SCTD-13-178-N005	5 bar (75 psi)	
CD000335	CDLN-500-SCTD-13-178-N004	4 bar (50 psi)	

Revision B1

LOGIC ELEMENT

CDLN-500-PCPS

NORMALLY CLOSED
POPPET TYPE
EXTERNALLY PILOTED

ATLANTIC Fluid Tech
WWW.SUMY.IR

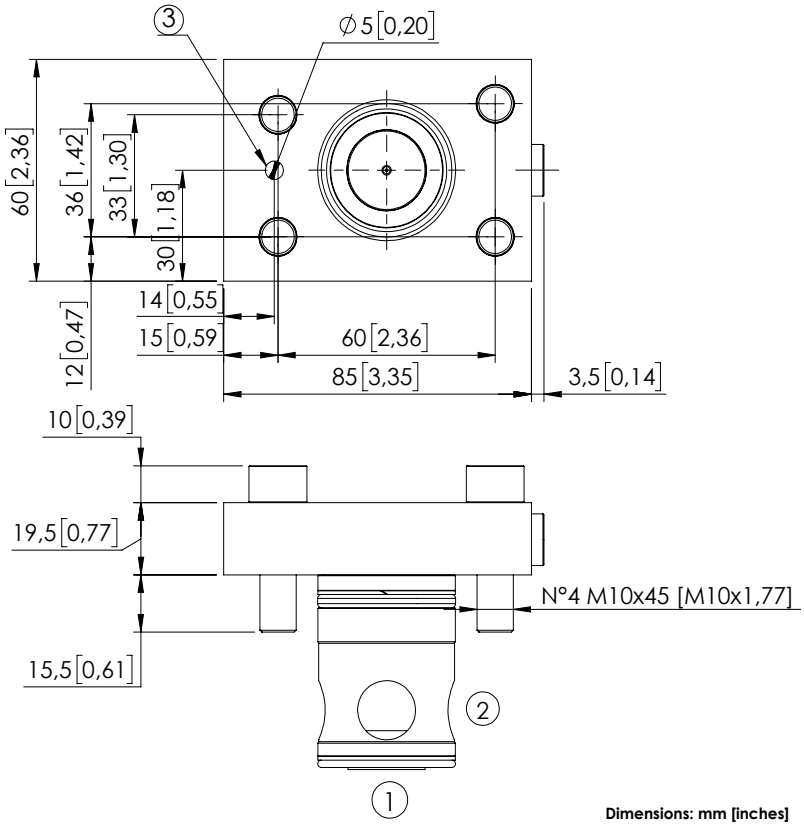

Dimensions: mm [inches]

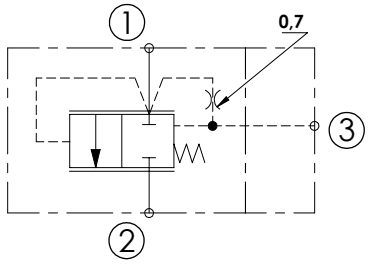

SPECIFICATIONS

Max. operating pressure:	350 bar (5000 psi)
Rated flow:	500 l/min (132 gpm)
Cavity:	VP000189
Weight:	1,1 kg (2,43 lbs)
Seal kit:	RC700189
Contamination class to ISO 4406:	See technical spec.
MTTFd:	150 - 1200 years: See technical spec.

NOTES

For other configurations/quick codes not available in this catalogue page please consult factory

CURVES

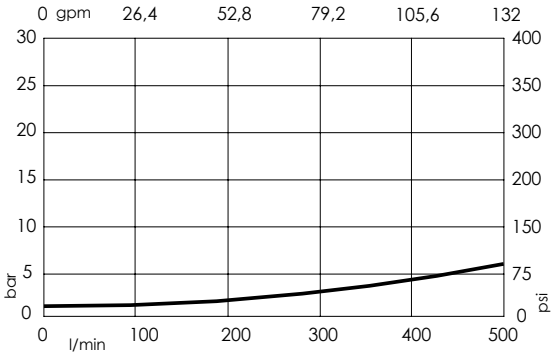

ORDERING CODES

Quick code	Description	Main ports size	Standard setting Q=1 l/min (0,3 gpm)	Configuration
CD000376	CDLN-500-PCPS-01-189-N350	T: G1/8"	1 bar (15 psi)	Logic element + cover
SC000049	SCLN-500-PCPS-01-189-N350	-	1 bar (15 psi)	Logic element

Revision A1

ATLANTIC
Fluid Tech
WWW.SUMY.IR

SECTION 6

Flow Dividers and Combiners

SECTION 6

FLOW DIVIDERS AND COMBINERS

ATLANTIC Fluid Tech
WWW.SUMY.IR

Hydraulic scheme	Valve description	Valve type	Rated flow l/min (gpm)	Max. pressure bar (psi)	Installation	Main port size or cavity type	Page
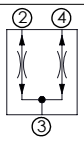	CFDT-055-BRAR	Spool type, divider and combiner	55 (15)	350 (5000)	Cartridge	SAE-10-4N	6.01.**010**
	CFDT-160-BFRR	Spool type, divider and combiner	160 (43)	350 (5000)	Cartridge	SAE-16-4N	6.01.**020**

FLOW DIVIDER AND COMBINER

CFDT-055-BFRR

ATLANTIC Fluid Tech
WWW.SUMY.IR

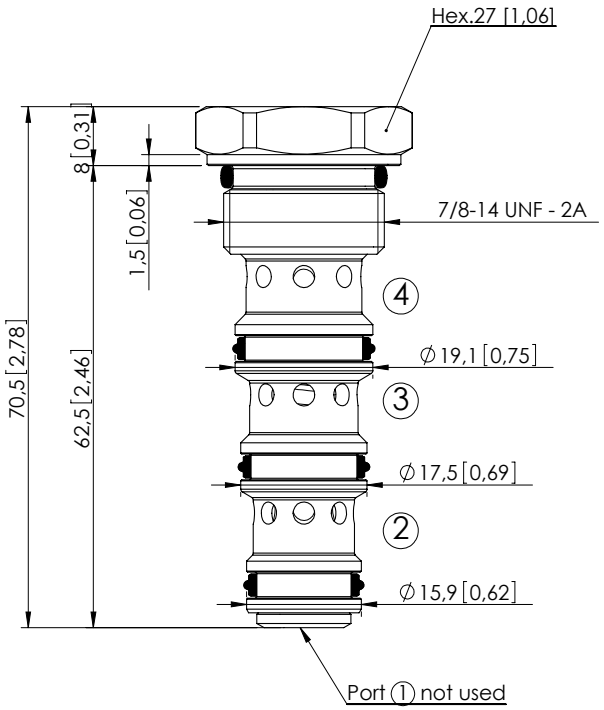

Dimensions: mm [inches]

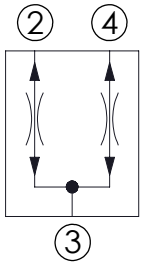

SPECIFICATIONS

Max. operating pressure:	350 bar (5000 psi)
Division or combination:	50 %- 50 %
Cavity:	SAE-10-4N-3P
Weight:	0,13 kg (0,29 lbs)
Seal kit:	RB700102
Installation torque:	50 - 57 Nm (37 - 42 ft-lb)
Contamination class to ISO 4406:	See technical spec.
MTTFd:	150 - 1200 years: See technical spec.

NOTES

Flow divider accuracy: ±7/8% between 40-100% of max. input flow.
Other dividing ratios available.

For other configurations/quick codes not available in this catalogue page please consult factory

CURVES

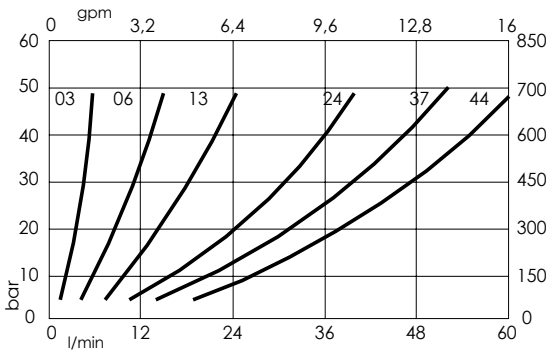

ORDERING CODES

Quick code	Description	Inlet range flow	
CF000047	CFDT-055-BFRR-03-S10-N350	1,2-3 l/min (0,3-0,8 gpm)	
CF000048	CFDT-055-BFRR-06-S10-N350	3-6 l/min (0,8-1,6 gpm)	
CF000049	CFDT-055-BFRR-13-S10-N350	6-13 l/min (1,6-3,4 gpm)	
CF000050	CFDT-055-BFRR-24-S10-N350	10-24 l/min (2,6-6,3 gpm)	
CF000001	CFDT-055-BFRR-37-S10-N350	15-37 l/min (3,9-9,8 gpm)	
CF000051	CFDT-055-BFRR-44-S10-N350	18-44 l/min (4,8-11,6 gpm)	

Revision C1

FLOW DIVIDER AND COMBINER

CFDT-160-BFRR

ATLANTIC Fluid Tech
WWW.SUMY.IR

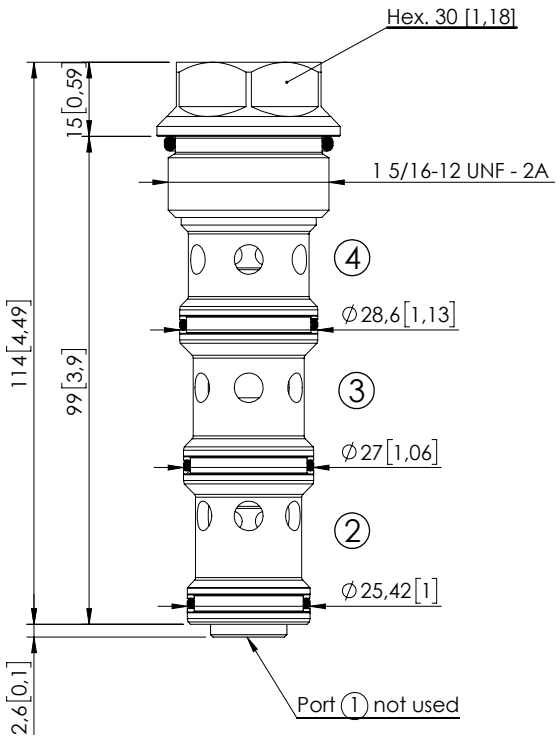

Dimensions: mm [inches]

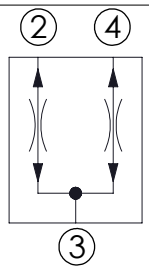

SPECIFICATIONS

Max. operating pressure:	350 bar (5000 psi)
Division or combination:	50 %- 50 %
Cavity:	SAE-16-4N
Weight:	0,36 kg (0,79 lbs)
Seal kit:	RB700104
Installation torque:	118 - 132 Nm (87 - 97 ft-lb)
Contamination class to ISO 4406:	See technical spec.
MTTFd:	150 - 1200 years: See technical spec.

NOTES

Flow divider accuracy: ±7/8% between 40-100% of max. input flow.
Other dividing ratios available.

For other configurations/quick codes not available in this catalogue page please consult factory

CURVES

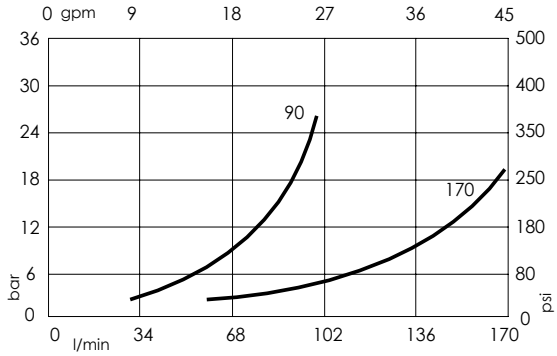

ORDERING CODES

Quick code	Description	Inlet range flow	
CF000364	CFDT-160-BFRR-90-S16-N350	30-90 l/min (8-24 gpm)	
CF000370	CFDT-160-BFRR-170-S16-N350	50-170 l/min (13-45 gpm)	

Revision C1

WWW.SUMY.IR

ATLANTIC
Fluid Tech
WWW.SUMY.IR

SECTION 7

Flow Control Valves

SECTION 7

FLOW CONTROL VALVES

ATLANTIC Fluid Tech
WWW.SUMY.IR

Hydraulic scheme	Valve description	Valve type	Rated flow l/min (gpm)	Max. pressure bar (psi)	Installation	Main port size or cavity type	Page
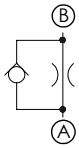	CFFN-015-MFSR	Disk type, double mounting	15 (4)	350 (5000)	Insert	G 1/4"	7.01.**010**
	CFFN-030-MFSR	Disk type, double mounting	30 (8)	350 (5000)	Insert	G 3/8"	7.01.**020**
	CFFN-070-MFSR	Disk type, double mounting	70 (19)	350 (5000)	Insert	G 1/2"	7.01.**030**
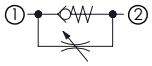	CFSN-040-MHRR	Not compensated	40 (11)	350 (5000)	Cartridge	SAE-08-2N	7.02.**040**
	CFSN-040-BHRR	Not compensated	40 (11)	350 (5000)	Cartridge	SAE-08-2N	7.03.**050**
	CFSN-070-BHRR	Not compensated	70 (19)	350 (5000)	Cartridge	SAE-10-2N	7.03.**060**
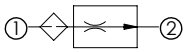	CFST-008-MFST	Flow regulator	0,3 - 10 (0,08-2,6)	420 (6000)	Cartridge	VP000391	7.04.**070**
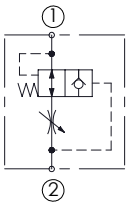	CFHN-030-MHST	Hose burst valve	25 (7)	350 (5000)	Insert	G 1/4"	7.05.**080**
	CFHN-050-MHST	Hose burst valve	50 (13)	350 (5000)	Insert	G 3/8"	7.05.**080**
	CFHN-080-MHST	Hose burst valve	80 (21)	350 (5000)	Insert	G 1/2"	7.05.**080**
	CFHN-160-MHST	Hose burst valve	160 (42)	350 (5000)	Insert	G 3/4"	7.05.**080**
	CFHN-200-MHST	Hose burst valve	250 (66)	350 (5000)	Insert	G 1"	7.05.**080**
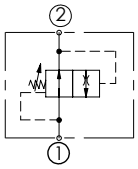	CFST-010-MDST	Two ways compensated	10 (3)	350 (5000)	Insert	G 1/4"	7.06.**090**
	CFST-025-MDST	Two ways compensated	25 (7)	350 (5000)	Insert	G 3/8"	7.06.**090**
	CFST-070-MDST	Two ways compensated	67 (18)	350 (5000)	Insert	G 1/2"	7.06.**090**
	CFST-150-MDST	Two ways compensated	150 (40)	350 (5000)	Insert	G 3/4"	7.06.**090**
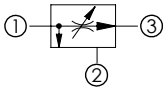	CFCT-060-MHRR	Three ways combination	60 (16)	350 (5000)	Cartridge	SAE-10-3N	7.07.**100**
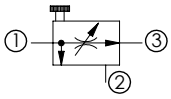	CFPT-140-MMRR	Three ways combination	140 (37)	350 (5000)	Cartridge	SAE-16-3N	7.08.**110**

FLOW CONTROL VALVES

CFFN-015-MFSR

INSERT TYPE
DOUBLE MOUNTING

ATLANTIC Fluid Tech
WWW.SUMY.IR

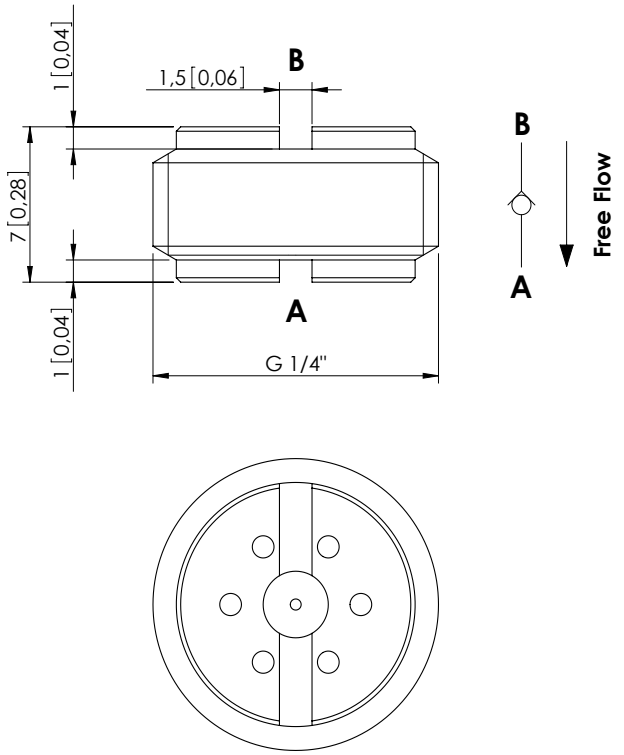

Dimensions: mm [inches]

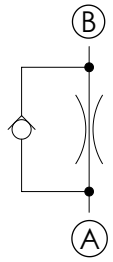

SPECIFICATIONS

Max. operating pressure:	350 bar (5000 psi)
Rated flow:	15 l/min (4 gpm)
Cavity:	G 1/4"
Weight:	0,01 kg (0,02 lbs)
Installation torque:	5 Nm (4 ft-lb)
Contamination class to ISO 4406:	See technical spec.
MTTFd:	150 - 1200 years: See technical spec.

NOTES

For other configurations/quick codes not available in this catalogue page please consult factory

CURVES

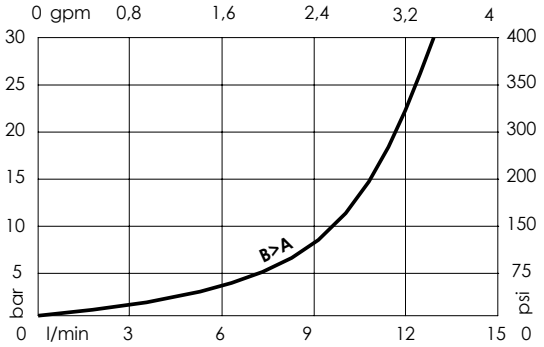

ORDERING CODES

Quick code	Description	Ø Orifice	Quick code	Description	Ø Orifice
CF000118	CFFN-015-MFSR-05-G14-N350	0,5 [0,019]	CF000205	CFFN-015-MFSR-13-G14-N350	1,3 [0,051]
CF000119	CFFN-015-MFSR-06-G14-N350	0,6 [0,023]	CF000206	CFFN-015-MFSR-14-G14-N350	1,4 [0,055]
CF000120	CFFN-015-MFSR-07-G14-N350	0,7 [0,027]	CF000123	CFFN-015-MFSR-15-G14-N350	1,5 [0,059]
CF000121	CFFN-015-MFSR-08-G14-N350	0,8 [0,031]	CF000207	CFFN-015-MFSR-16-G14-N350	1,6 [0,063]
CF000203	CFFN-015-MFSR-09-G14-N350	0,9 [0,035]	CF000208	CFFN-015-MFSR-17-G14-N350	1,7 [0,067]
CF000088	CFFN-015-MFSR-10-G14-N350	1 [0,039]	CF000209	CFFN-015-MFSR-18-G14-N350	1,8 [0,071]
CF000204	CFFN-015-MFSR-11-G14-N350	1,1 [0,043]	CF000210	CFFN-015-MFSR-19-G14-N350	1,9 [0,074]
CF000122	CFFN-015-MFSR-12-G14-N350	1,2 [0,047]	CF000124	CFFN-015-MFSR-20-G14-N350	2 [0,079]

Revision A1

FLOW CONTROL VALVES

CFFN-030-MFSR

INSERT TYPE
DOUBLE MOUNTING

ATLANTIC Fluid Tech
WWW.SUMY.IR

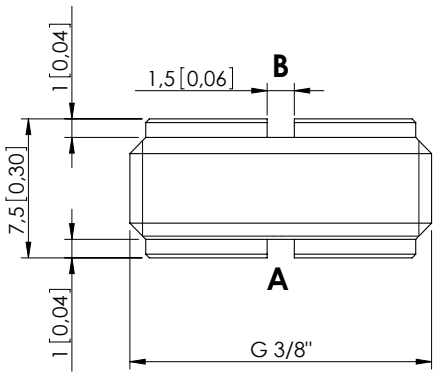

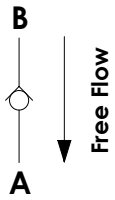

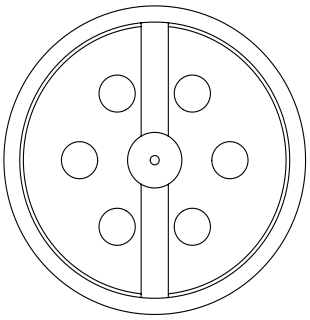

Dimensions: mm [inches]

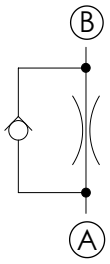

SPECIFICATIONS

Max. operating pressure:	350 bar (5000 psi)
Rated flow:	30 l/min (8 gpm)
Cavity:	G 3/8"
Weight:	0,01 kg (0,02 lbs)
Installation torque:	10 Nm (7 ft-lb)
Contamination class to ISO 4406:	See technical spec.
MTTFd:	150 - 1200 years: See technical spec.

NOTES

For other configurations/quick codes not available in this catalogue page please consult factory

CURVES

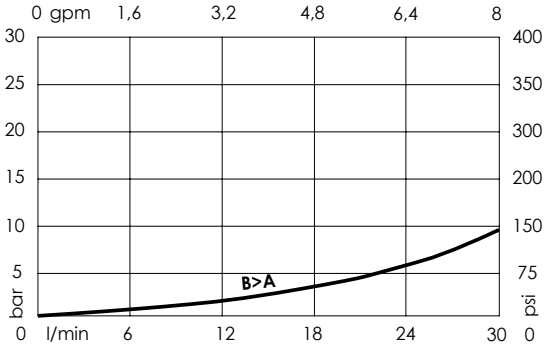

ORDERING CODES

Quick code	Description	Ø Orifice	Quick code	Description	Ø Orifice
CF000068	CFFN-030-MFSR-05-G38-N350	0,5 [0,019]	CF000197	CFFN-030-MFSR-13-G38-N350	1,3 [0,051]
CF000069	CFFN-030-MFSR-06-G38-N350	0,6 [0,023]	CF000198	CFFN-030-MFSR-14-G38-N350	1,4 [0,055]
CF000070	CFFN-030-MFSR-07-G38-N350	0,7 [0,027]	CF000074	CFFN-030-MFSR-15-G38-N350	1,5 [0,059]
CF000071	CFFN-030-MFSR-08-G38-N350	0,8 [0,031]	CF000199	CFFN-030-MFSR-16-G38-N350	1,6 [0,063]
CF000195	CFFN-030-MFSR-09-G38-N350	0,9 [0,035]	CF000200	CFFN-030-MFSR-17-G38-N350	1,7 [0,067]
CF000072	CFFN-030-MFSR-10-G38-N350	1 [0,039]	CF000201	CFFN-030-MFSR-18-G38-N350	1,8 [0,071]
CF000196	CFFN-030-MFSR-11-G38-N350	1,1 [0,043]	CF000202	CFFN-030-MFSR-19-G38-N350	1,9 [0,074]
CF000073	CFFN-030-MFSR-12-G38-N350	1,2 [0,047]	CF000125	CFFN-030-MFSR-20-G38-N350	2 [0,079]

Revision A1

FLOW CONTROL VALVES

CFFN-070-MFSR

INSERT TYPE
DOUBLE MOUNTING

ATLANTIC Fluid Tech
WWW.SUMY.IR

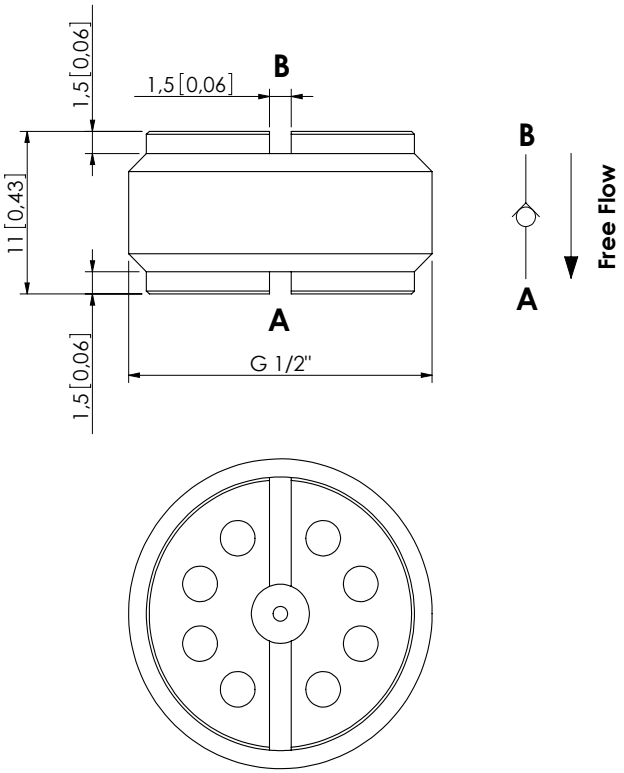

Dimensions: mm [inches]

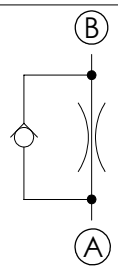

SPECIFICATIONS

Max. operating pressure:	350 bar (5000 psi)
Rated flow:	70 l/min (19 gpm)
Cavity:	G 1/2"
Weight:	0,02 kg (0,04 lbs)
Installation torque:	10 Nm (7 ft-lb)
Contamination class to ISO 4406:	See technical spec.
MTTFd:	150 - 1200 years: See technical spec.

NOTES

For other configurations/quick codes not available in this catalogue page please consult factory

CURVES

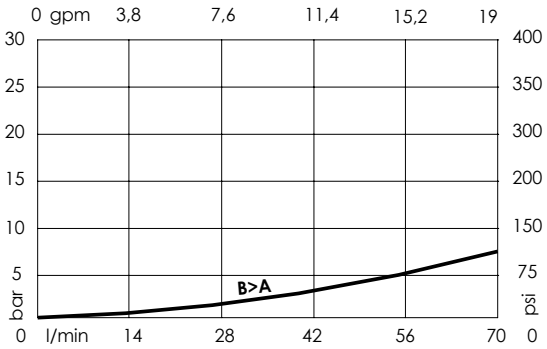

ORDERING CODES

Quick code	Description	Ø Orifice	Quick code	Description	Ø Orifice
CF000127	CFFN-070-MFSR-10-G12-N350	1 [0,039]			
CF000128	CFFN-070-MFSR-15-G12-N350	1,5 [0,059]			
CF000352	CFFN-070-MFSR-18-G12-N350	1,8 [0,071]			
CF000117	CFFN-070-MFSR-20-G12-N350	2 [0,079]			
CF000129	CFFN-070-MFSR-25-G12-N350	2,5 [0,09]			
CF000130	CFFN-070-MFSR-30-G12-N350	3 [0,11]			
CF000080	CFFN-070-MFSR-33-G12-N350	3,3 [0,129]			

Revision A1

FLOW RESTRICTOR

CFSN-040-MHRR

NEEDLE RESTRICTOR
FREE REVERSE FLOW

ATLANTIC Fluid Tech
WWW.SUMY.IR

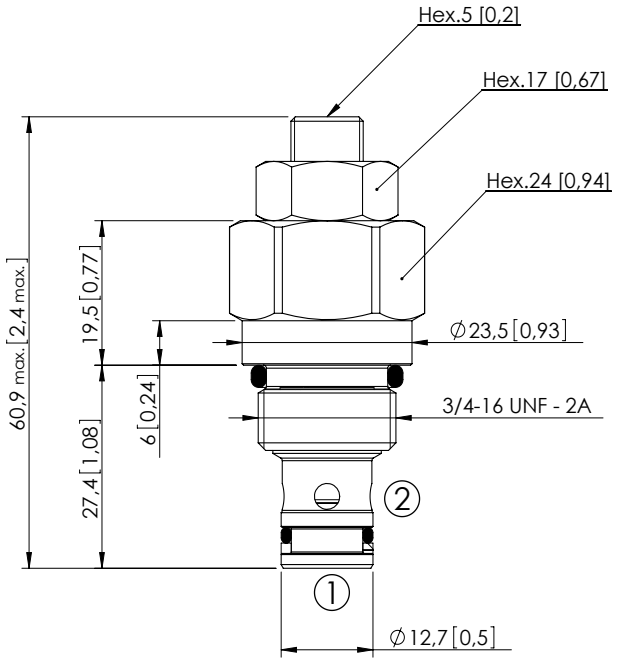

Dimensions: mm [inches]

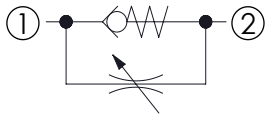

SPECIFICATIONS

Max. operating pressure:	350 bar (5000 psi)
Rated flow:	40 l/min (11 gpm)
Cavity:	SAE-08-2N
Weight:	0,12 kg 0,26 lbs)
Seal kit:	RA700081
Installation torque:	45 - 50 Nm (33 - 37 ft-lb)
Contamination class to ISO 4406:	See technical spec.
MTTFd:	150 - 1200 years: See technical spec.

NOTES

For other configurations/quick codes not available in this catalogue page please consult factory

OPTIONS

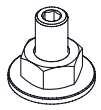

Screw and locknut

CURVES

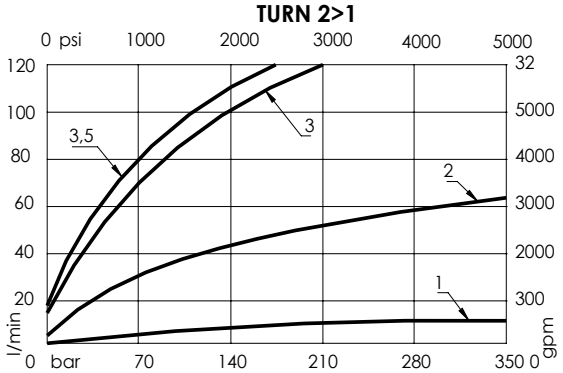

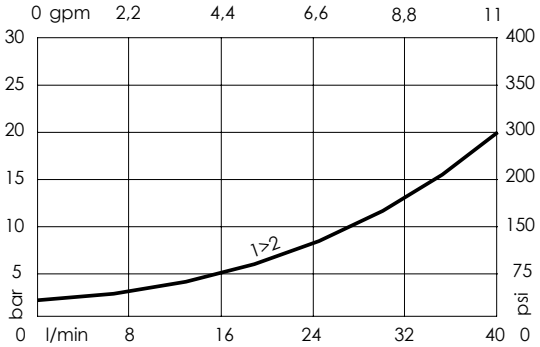

ORDERING CODES

Quick code	Description	Options	
CF000167	CFSN-040-MHRR-NP-S08-N350	Screw and locknut	

Revision A1

FLOW RESTRICTOR

CFSN-040-BHRR

ATLANTIC Fluid Tech
WWW.SUMY.IR

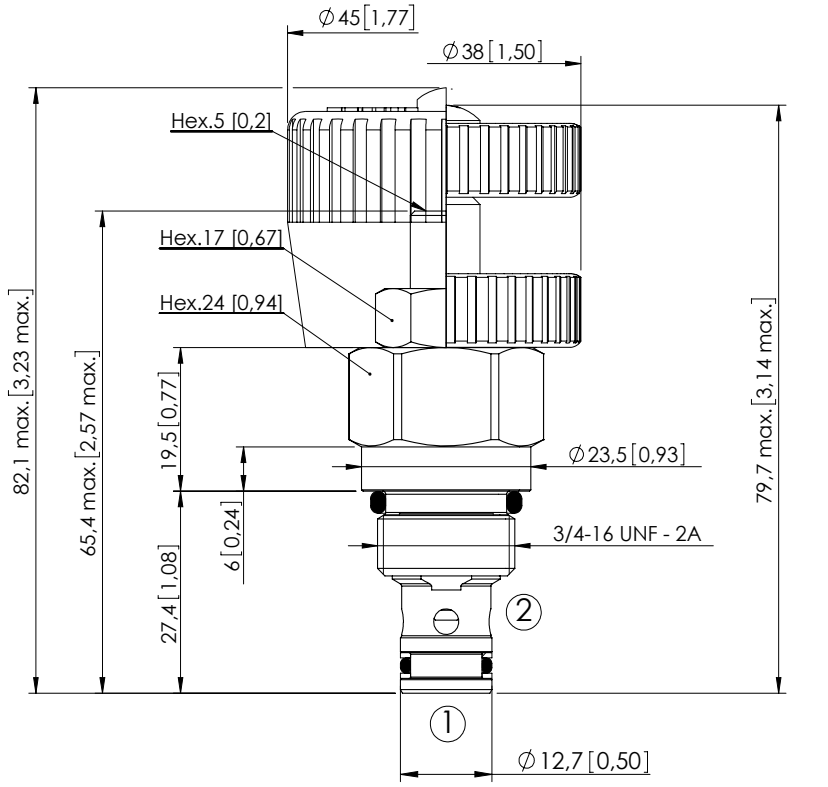

Dimensions: mm [inches]

SPECIFICATIONS

Max. operating pressure:	350 bar (5000 psi)
Rated flow:	40 l/min (11 gpm)
Cavity:	SAE 08 2N
Weight:	0,12 kg (0,26 lbs)
Seal kit:	RB700081
Installation torque:	45 - 50 Nm (33 - 37 ft-lb)
Contamination class to ISO 4406:	See technical spec.
MTTFd:	150 - 1200 years: See technical spec.

NOTES

For other configurations/quick codes not available in this catalogue page please consult factory

OPTIONS

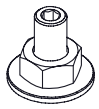

Screw and locknut

Handknob and locknut

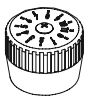

Graduated handknob

CURVES

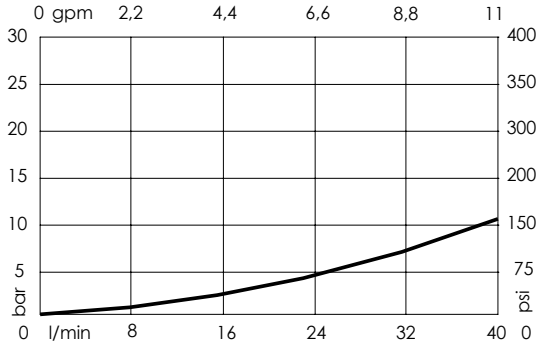

Fully open
Both directions

ORDERING CODES

Quick code	Description	Options	
CF000112	CFSN-040-BHRR-NP-S08-N350	Screw and locknut	
CF000109	CFSN-040-BVRR-NP-S08-N350	Handknob and locknut	
CF000253	CFSN-040-BMRR-NP-S08-N350	Graduated handknob	

Revision B1

FLOW RESTRICTOR

CFSN-070-BHRR

ATLANTIC Fluid Tech
WWW.SUMY.IR

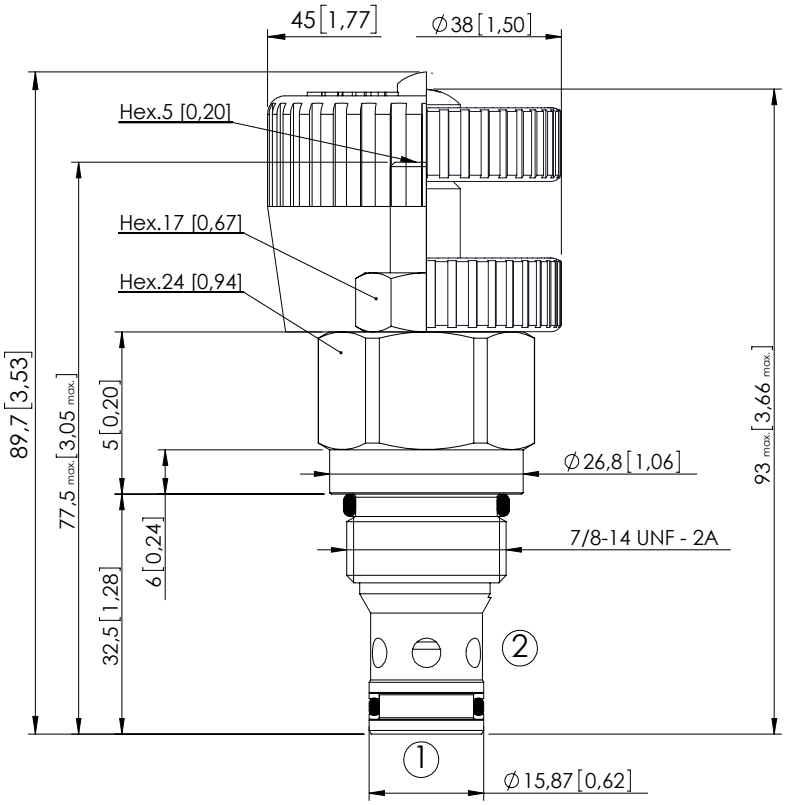

Dimensions: mm [inches]

SPECIFICATIONS

Max. operating pressure:	350 bar (5000 psi)
Rated flow:	70 l/min (19 gpm)
Cavity:	SAE 10 2N
Weight:	0,17 kg (0,37 lbs)
Seal kit:	RB700082
Installation torque:	55 - 62 Nm (41 - 46 ft-lb)
Contamination class to ISO 4406:	See technical spec.
MTTFd:	150 - 1200 years: See technical spec.

NOTES

For other configurations/quick codes not available in this catalogue page please consult factory

OPTIONS

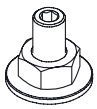

Screw and locknut

Handknob and locknut

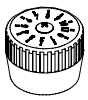

Graduated handknob

CURVES

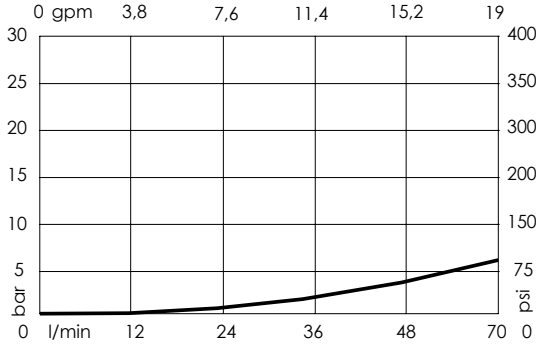

Fully open
Both directions

ORDERING CODES

Quick code	Description	Options	
CF000136	CFSN-070-BHRR-NP-S10-N350	Screw and locknut	
CF000116	CFSN-070-BVRR-NP-S10-N350	Handknob and locknut	
CF000225	CFSN-070-BMRR-NP-S10-N350	Graduated handknob	

Revision A2

FLOW REGULATOR

CFST-008-MFRR

ATLANTIC Fluid Tech
WWW.SUMY.IR

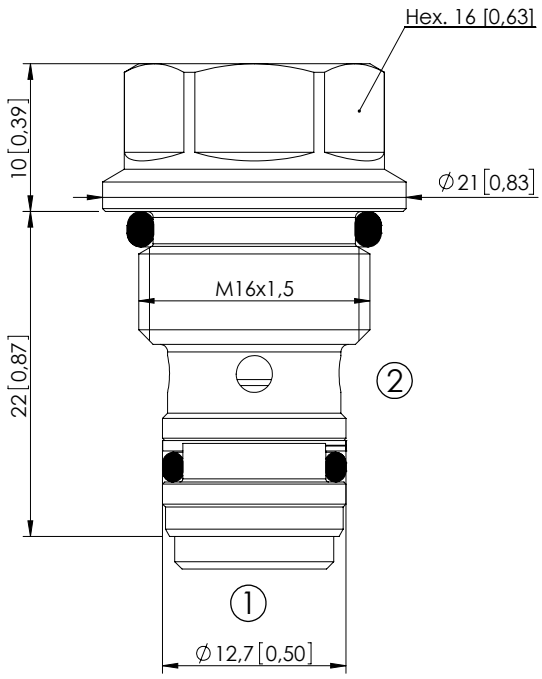

Dimensions: mm [inches]

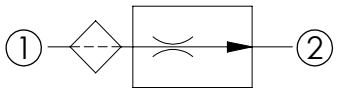

SPECIFICATIONS

Max. operating pressure:	420 bar (6000 psi)
Rated flow:	See table
Cavity:	VP000391
Weight:	0,04 kg (0,08 lbs)
Contamination class to ISO 4406:	See technical spec.
Seal kit:	RA700391
Installation torque:	34 - 41 Nm (25 - 30 ft-lb)
MTTFd:	150 - 1200 years: See technical spec.

NOTES

For other configurations/quick codes not available in this catalogue page please consult factory

CURVES

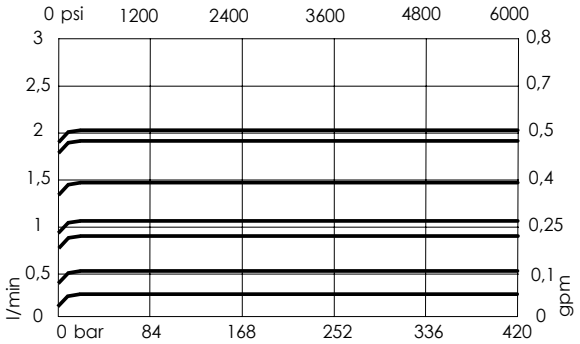

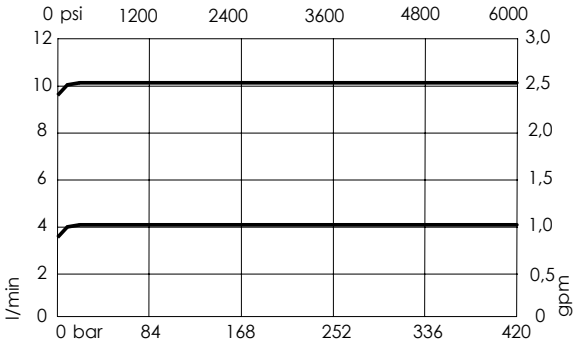

ORDERING CODES

Quick code	Description	Regulated flow (±10%)		
CF000332	CFST-008-MFRR-03-391-N420	0,3 l/min (0,08 gpm)		
CF000221	CFST-008-MFRR-05-391-N420	0,5 l/min (0,1 gpm)		
CF000296	CFST-008-MFRR-07-391-N420	0,7 l/min (0,2 gpm)		
CF000231	CFST-008-MFRR-11-391-N420	1,1 l/min (0,3 gpm)		
CF000232	CFST-008-MFRR-14-391-N420	1,4 l/min (0,4 gpm)		
CF000233	CFST-008-MFRR-17-391-N420	1,7 l/min (0,45 gpm)		
CF000245	CFST-008-MFRR-20-391-N420	2 l/min (0,5 gpm)		
CF000425	CFST-008-MFRR-40-391-N420	4 l/min (1,0 gpm)		
CF000426	CFST-008-MFRR-99-391-N420	10 l/min (2,6 gpm)		

Revision B

HOSE BURST VALVE

CFHN-XXX-MHST

INSERT TYPE

ATLANTIC Fluid Tech
WWW.SUMY.IR

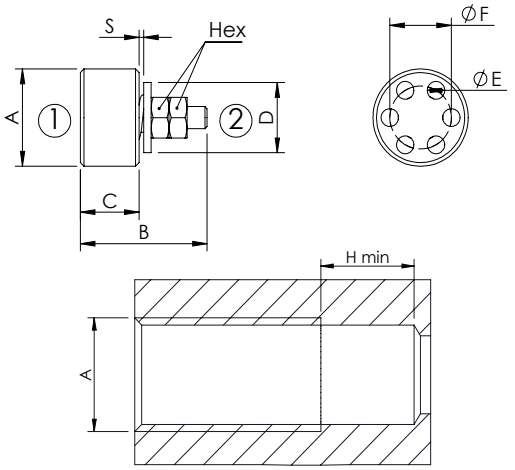

Dimensions: mm [inches]

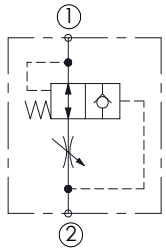

SPECIFICATIONS

Max. operating pressure:	500 bar (7200 psi)
Rated flow:	See table
Weight:	6 - 45 g (0,01 - 0,1 lbs)
Contamination class to ISO 4406:	See technical spec.
MTTFd:	150 - 1200 years: See technical spec.

NOTES

For sleeve housing consult Accessories section

For other configurations/quick codes not available in this catalogue page please consult factory

CURVES (S)

G1/4"

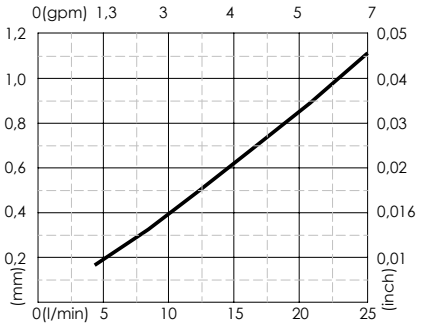

G3/8"

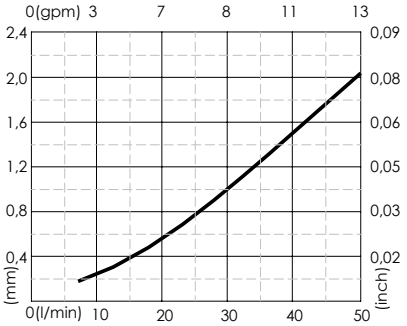

G1/2"

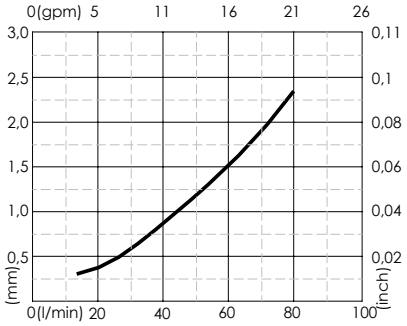

G3/4"

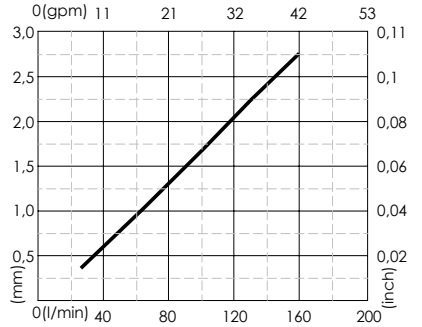

G1"

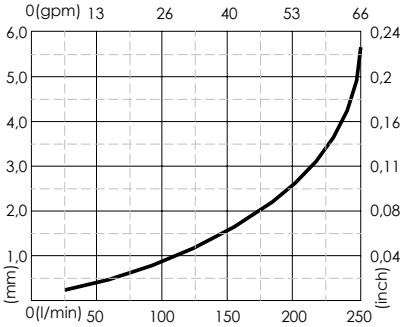

ORDERING CODES

Quick code	Description	Max. flow	Min. flow	A	B	C	D	E	F	Hex.	H	Installation torque Nm [fb-lb]
CF000348	CFHN-030-MHST-00-235	25 l/min (7 gpm)	4 l/min (1 gpm)	G 1/4"	17,5 [0,69]	8,1 [0,32]	9,5 [0,37]	2,4 [0,09]	8,5 [0,33]	5,5 [0,22]	11 [0,43]	8 [6]
CF000381	CFHN-050-MHST-00-234	50 l/min (13 gpm)	6,3 l/min (2 gpm)	G 3/8"	21 [0,83]	10,6 [0,42]	12,5 [0,49]	3,5 [0,14]	11 [0,43]	5,5 [0,22]	11 [0,43]	12 [9]
CF000379	CFHN-080-MHST-00-233	80 l/min (21 gpm)	16 l/min (4 gpm)	G 1/2"	25 [0,98]	12,1 [0,48]	15 [0,59]	4,5 [0,18]	13 [0,51]	7 [0,28]	15 [0,59]	18 [13]
CF000339	CFHN-160-MHST-00-195	160 l/min (42 gpm)	25 l/min (7 gpm)	G 3/4"	30,5 [1,2]	17,1 [0,67]	17,5 [0,69]	6 [0,24]	16 [0,63]	7 [0,28]	16 [0,63]	23 [17]
CF000382	CFHN-200-MHST-00-232	250 l/min (66 gpm)	80 l/min (21 gpm)	G 1"	38 [1,58]	22,1 [0,87]	26 [1,02]	7,5 [0,30]	19,5 0,77]	7 [0,28]	20 [0,79]	25 [18]

Revision A1

FLOW REGULATOR

CFST-XXX-MDST

2 WAYS COMPENSATED INSERT TYPE

ATLANTIC Fluid Tech
WWW.SUMY.IR

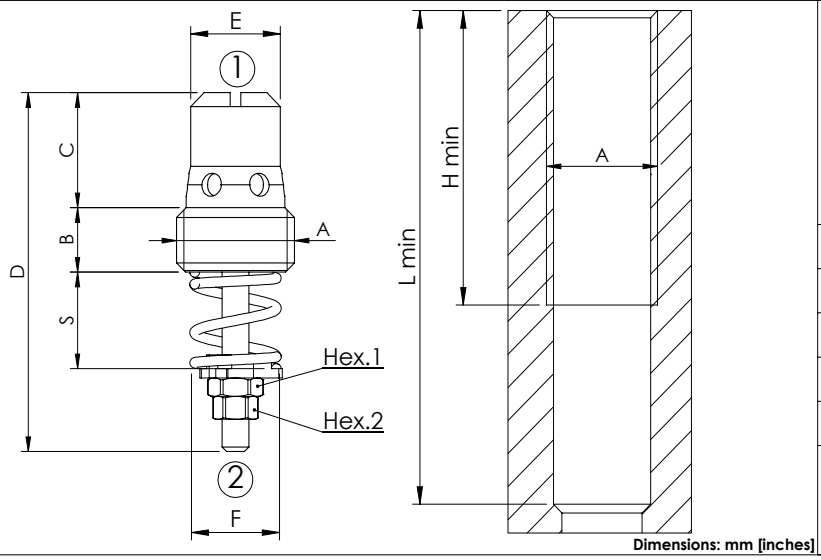

Dimensions: mm [inches]

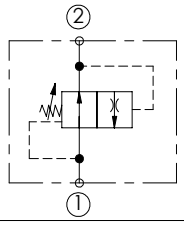

SPECIFICATIONS

Max. operating pressure:	300 bar (4300 psi)
Contamination class to ISO 4406:	See technical spec.
MTTFd:	150 - 1200 years: See technical spec.

NOTES

For sleeve housing consult Accessories section
For other configurations/quick codes
not available in this catalogue page please
consult factory

SPECIFICATIONS

A	B	C	D	E	F	H min	L min	Hex. 1	Hex. 2	Installation torque	Max. flow 2→1	Max. flow 1→2	Weight
G 1/4"	7 [0,27]	12,5 [0,49]	39 [1,54]	10 [0,39]	10,5 [0,41]	33 [1,30]	55 [2,17]	5,5 [0,22]	4,5 [0,18]	6 Nm (4 lb/fb)	10 l/min (3 gpm)	15 l/min (4 gpm)	13 g (0,03 lbs)
G 3/8"	7 [0,27]	13,5 [0,53]	43 [1,69]	11,5 [0,45]	13,5 [0,53]	34 [1,34]	60 [2,36]	7 [0,27]	6 [0,24]	8 Nm (6 lb/fb)	25 l/min (7 gpm)	30 l/min (8 gpm)	23 g (0,05 lbs)
G 1/2"	8 [0,31]	16 [0,63]	49 [1,93]	15 [0,59]	18 [0,71]	40 [1,57]	70 [2,76]	7 [0,27]	6 [0,24]	12 Nm (9 lb/fb)	67 l/min (18 gpm)	90 l/min (24 gpm)	40 g (0,08 lbs)
G 3/4"	10 [0,39]	21 [0,83]	61 [2,40]	20 [0,79]	23 [0,91]	51 [2,01]	80 [3,15]	7 [0,27]	6 [0,24]	16 Nm (12 lb/fb)	150 l/min (40 gpm)	150 l/min (40 gpm)	80 g (0,17 lbs)

CURVES: SETTING LENGTH S

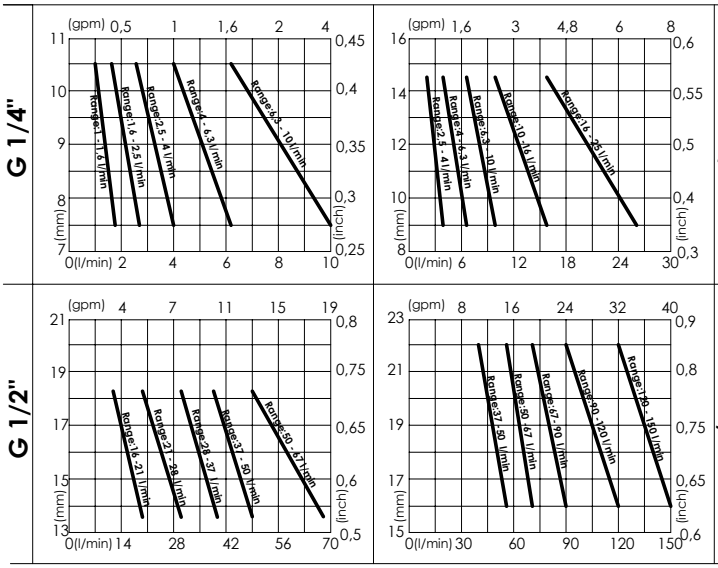

CURVES: 1>2

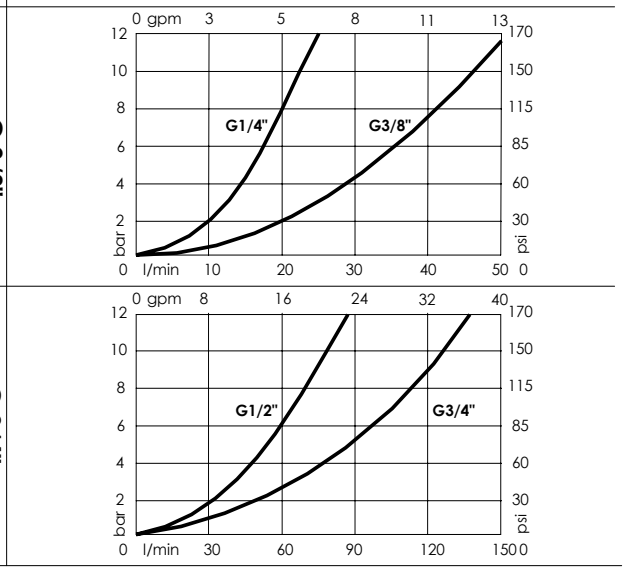

ORDERING CODES

G 1/4"		G 3/8"		G 1/2"		G 3/4"	
Quick code	Flow range adjustment	Quick code	Flow range adjustment	Quick code	Flow range adjustment	Quick code	Flow range adjustment
CF000104	1-1,6 l/min (0,3-0,4 gpm)	CF000099	2,5-4 l/min (0,7-1 gpm)	CF000093	16-21 l/min (4-6 gpm)	CF000096	37-50 l/min (10-13 gpm)
CF000105	1,6-2,5 l/min (0,4-0,7 gpm)	CF000100	4-6,3 l/min (1-1,7 gpm)	CF000094	21-28 l/min (6-7 gpm)	CF000097	50-67 l/min (13-18 gpm)
CF000106	2,5-4 l/min (0,7-1 gpm)	CF000101	6,3-10 l/min (1,7-3 gpm)	CF000095	28-37 l/min (7-10 gpm)	CF000098	67-90 l/min (18-24 gpm)
CF000107	4-6,3 l/min (1-1,7 gpm)	CF000102	10-16 l/min (3-4 gpm)	CF000081	37-50 l/min (10-13 gpm)	CF000083	90-120 l/min (24-32 gpm)
CF000108	6,3-10 l/min (1,7-3 gpm)	CF000103	16-25 l/min (4-7 gpm)	CF000082	50-67 l/min (13-18 gpm)	CF000092	120-150 l/min (32-40 gpm)

Revision B1

FLOW REGULATOR

CFCT-060-MHRR

3 WAYS COMBINATION ADJUSTABLE SETTING

ATLANTIC Fluid Tech
WWW.SUMY.IR

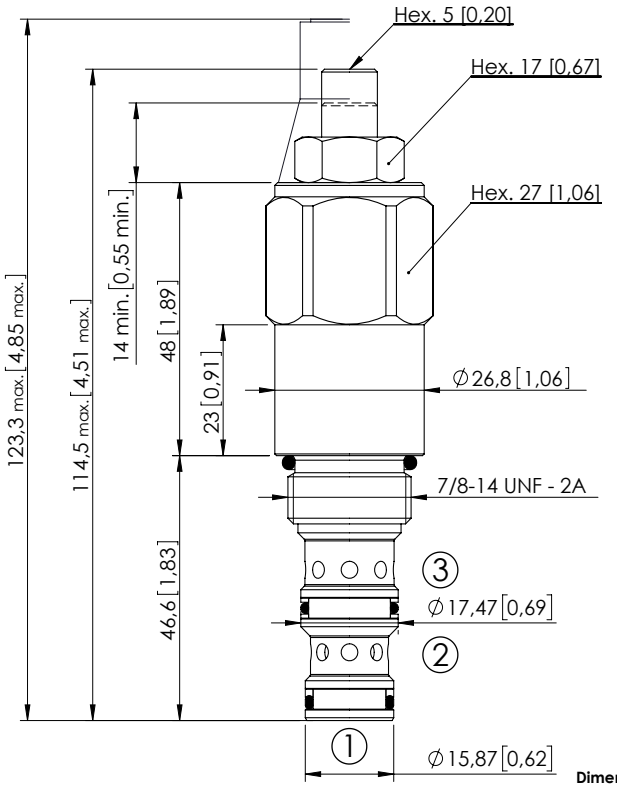

Dimensions: mm [inches]

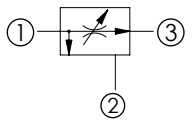

3 way application

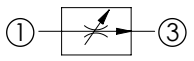

2 way application, port 2 not connected

SPECIFICATIONS

Max. operating pressure:	350 bar (5000 psi)
Rated flow:	60 l/min (16 gpm)
Cavity:	SAE-10-3N
Weight:	0.28 kg (0,62 lbs)
Contamination class to ISO 4406:	See technical spec.
Seal kit:	RA700092
Installation torque:	55 - 62 Nm (41 - 46 ft-lb)
MTTFd:	150 - 1200 years: See technical spec.

NOTES

If port 2 is blocked the valve operates as a two way flow regulator.
Port 2 can be pressurized.
For other configurations/quick codes not available in this catalogue page please consult factory

SEALING CAP

Ordering code:
AT000022

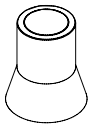

CURVES

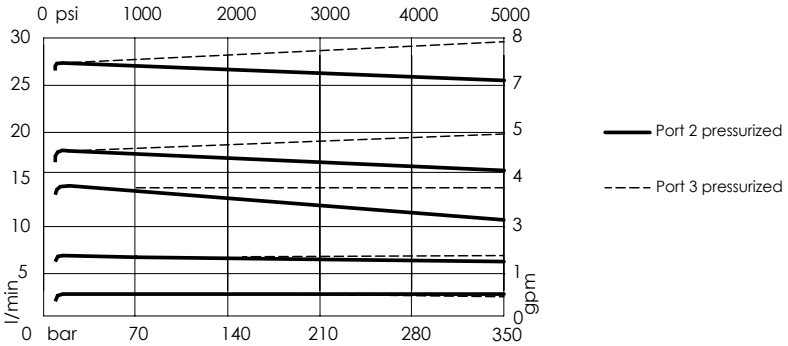

ORDERING CODES

Quick code	Description	Max. inlet flow	Regulated flow range	Adjustment
CF000063	CFCT-060-MHRR-03-S10-N350	60 l/min (16 gpm)	2,5-3,5 l/min (0,6-0,9 gpm)	Screw nut locknut
CF000149	CFCT-060-MHRR-04-S10-N350	60 l/min (16 gpm)	3-4,5 l/min (0,8-1,2 gpm)	Screw nut locknut
CF000150	CFCT-060-MHRR-06-S10-N350	60 l/min (16 gpm)	4,2-6,2 l/min (1,1-1,6 gpm)	Screw nut locknut
CF000006	CFCT-060-MHRR-09-S10-N350	60 l/min (16 gpm)	5,8-9 l/min (1,5-2,3 gpm)	Screw nut locknut
CF000054	CFCT-060-MHRR-12-S10-N350	60 l/min (16 gpm)	8,5-12 l/min (2,2-3,2 gpm)	Screw nut locknut
CF000062	CFCT-060-MHRR-16-S10-N350	60 l/min (16 gpm)	11,5-16,5 l/min (3-4,3 gpm)	Screw nut locknut
CF000151	CFCT-060-MHRR-23-S10-N350	60 l/min (16 gpm)	15,5-22,5 l/min (4-6 gpm)	Screw nut locknut
CF000152	CFCT-060-MHRR-30-S10-N350	60 l/min (16 gpm)	20-29,5 l/min (5,2-7,8 gpm)	Screw nut locknut
CF000057	CFCT-060-MHRR-32-S10-N350	60 l/min (16 gpm)	26,5-35,5 l/min (7-9,3 gpm)	Screw nut locknut

Revision C1

FLOW REGULATOR

CFPT-140-MMRR

3 WAYS FLOW REGULATOR ADJUSTABLE SETTING

ATLANTIC Fluid Tech
WWW.SUMY.IR

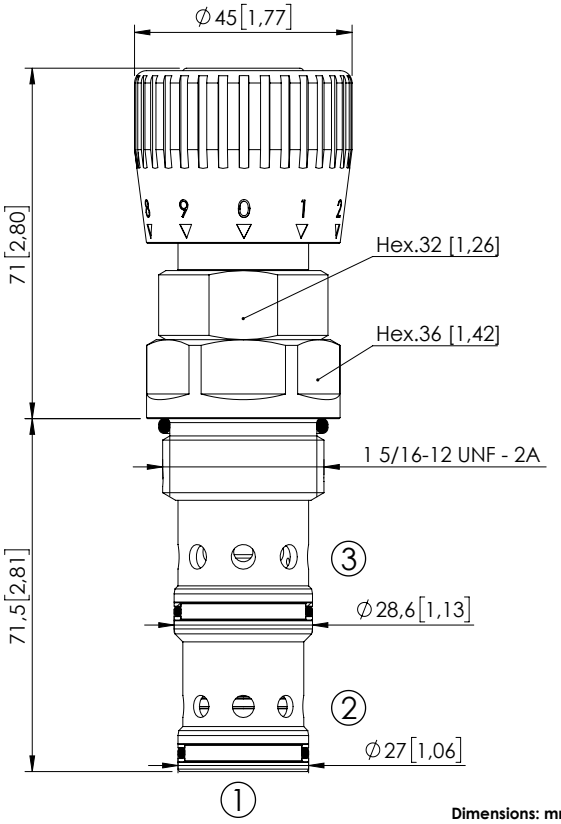

Dimensions: mm [inches]

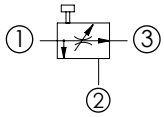

3 way application

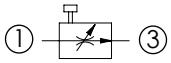

2 way application, port 2 not connected

SPECIFICATIONS

Max. operating pressure:	350 bar (5000 psi)
Rated flow:	140 l/min (37 gpm)
Cavity:	SAE-16-3N
Weight:	0,7 kg (1,54 lbs)
Seal kit:	RB700094
Installation torque:	118 - 132 Nm (160 - 179 ft-lb)
Contamination class to ISO 4406:	See technical spec.
MTTFd:	150 - 1200 years: See technical spec.

NOTES

If port 2 is blocked the valve operates as a two way flow regulator.
Port 2 can be pressurized.

For other configurations/quick codes not available in this catalogue page please consult factory

OPTIONS

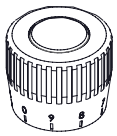

Graduated handknob for flow regulation under pressure

The washer is used to indicate the zero.

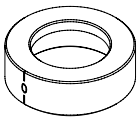

Ordering code: SV000083

CURVES

Regulated flow 1 to 3 (2 open to T)

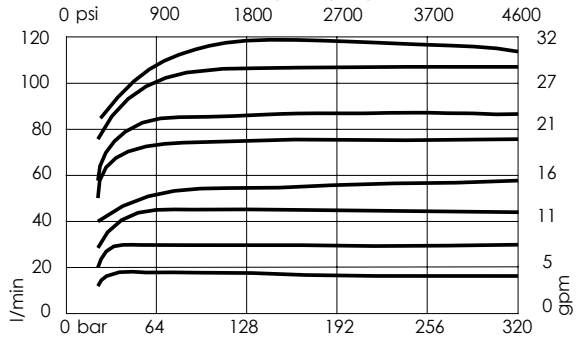

Δp 1 to 2

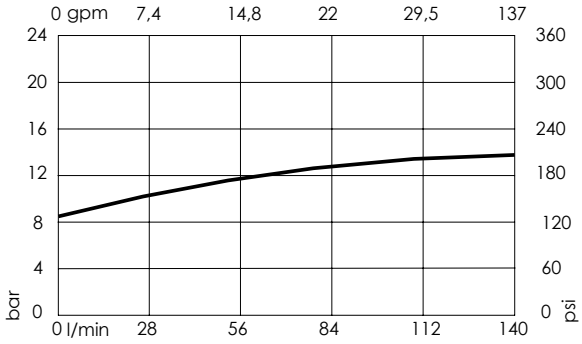

ORDERING CODES

Quick code	Description	Regulated flow range	Adjustment option
CF000310	CFPT-140-MMRR-15-S16-N350	0-15 l/min (0-4 gpm)	Graduated handknob
CF000311	CFPT-140-MMRR-25-S16-N350	0-25 l/min (0-7 gpm)	Graduated handknob
CF000312	CFPT-140-MMRR-40-S16-N350	0-40 l/min (0-11 gpm)	Graduated handknob
CF000313	CFPT-140-MMRR-50-S16-N350	0-50 l/min (0-13 gpm)	Graduated handknob
CF000314	CFPT-140-MMRR-65-S16-N350	0-65 l/min (0-17 gpm)	Graduated handknob
CF000315	CFPT-140-MMRR-80-S16-N350	0-80 l/min (0-21 gpm)	Graduated handknob
CF000450	CFPT-140-MMRR-100-S16-N350	0-100 l/min (0-27 gpm)	Graduated handknob
CF000451	CFPT-140-MMRR-120-S16-N350	0-120 l/min (0-32 gpm)	Graduated handknob

Revision B1

ATLANTIC
Fluid Tech
WWW.SUMY.IR

SECTION 8

Solenoid Cartridges

SECTION 8

SOLENOID CARTRIDGES

ATLANTIC Fluid Tech
WWW.SUMY.IR

Hydraulic scheme	Valve description	Valve type	Rated flow l/min (gpm)	Max. pressure bar (psi)	Installation	Main port size or cavity type	Page
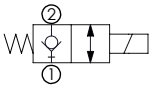	CEBD-001-NCFN-15	Direct acting, poppet type	1,5 (0,4)	350-500 (5000-7200)	Cartridge	SAE-08-2N	8.01.**010**
	CEBD-001-NCFN-15	Direct acting, poppet type	1 (0,3)	350 (5000)	Cartridge	VP000445	8.01.**020**
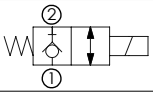	CEBD-001-NCFN-16	Direct acting, poppet type	1,5 (0,4)	350-500 (5000-7200)	Cartridge	SAE-08-2N	8.02.**030**
	CEBD-001-NCFN-16	Direct acting, poppet type	1 (0,3)	350 (5000)	Cartridge	VP000445	8.02.**040**
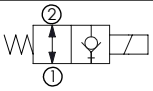	CEBD-001-NAFN-13	Direct acting, poppet type	1,5 (0,4)	350-500 (5000-7200)	Cartridge	SAE-08-2N	8.03.**050**
	CEBD-001-NAFN-13	Direct acting, poppet type	1 (0,3)	350 (5000)	Cartridge	VP000445	8.03.**060**
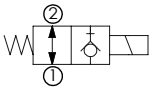	CEBD-001-NAFN-14	Direct acting, poppet type	1,5 (0,4)	350-500 (5000-7200)	Cartridge	SAE-08-2N	8.04.**070**
	CEBD-001-NAFN-14	Direct acting, poppet type	1 (0,3)	350 (5000)	Cartridge	VP000445	8.04.**080**
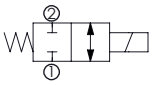	CEBS-010-NCFN-22	Direct acting, spool type	10 (3)	210 (3000)	Cartridge	SAE-08-2N	8.05.**090**
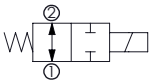	CEBS-010-NAFN-23	Direct acting, spool type	10 (3)	210 (3000)	Cartridge	SAE-08-2N	8.06.**100**
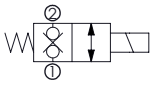	CEBD-015-NCFN-21	Direct acting, poppet type	15 (4)	210 (3000)	Cartridge	SAE-08-2N	8.07.**110**
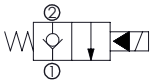	CEBN-060-NCFF-01	Pilot operated, poppet type, cable operated	60 (16)	350-500 (5000-7200)	Cartridge	SAE-08-2N	8.08.**120**
	CEBN-060-NCFN-01	Pilot operated, poppet type	60 (16)		Cartridge	SAE-08-2N	8.08.**130**
	CEBN-080-NCFN-01	Pilot operated, poppet type	80 (21)		Cartridge	SAE-10-2N	8.08.**140**
	CEBN-190-NCFN-01	Pilot operated, poppet type	190 (50)		Cartridge	SAE-12-2N	8.08.**150**
	CEBN-310-NCFN-01	Pilot operated, poppet type	310 (82)		Cartridge	SAE-16-2N	8.08.**160**
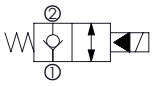	CEBE-040-NCFN-05	Pilot operated, poppet type	40 (11)	350-500 (5000-7200)	Cartridge	SAE-08-2N	8.09.**170**
	CEBN-060-NCFN-05	Pilot operated, poppet type	60 (16)		Cartridge	SAE-08-2N	8.09.**180**
	CEBN-080-NCFN-05	Pilot operated, poppet type	80 (21)		Cartridge	SAE-10-2N	8.09.**190**
	CEBN-190-NCFN-05	Pilot operated, poppet type	190 (50)		Cartridge	SAE-12-2N	8.09.**200**
	CEBN-310-NCFN-05	Pilot operated, poppet type	310 (82)		Cartridge	SAE-16-2N	8.09.**210**
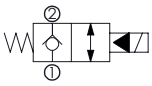	CEBN-060-NCFN-03	Pilot operated, poppet type	60 (16)	350-500 (5000-7200)	Cartridge	SAE-08-2N	8.10.**220**
	CEBN-080-NCFN-03	Pilot operated, poppet type	80 (21)		Cartridge	SAE-10-2N	8.10.**230**
	CEBN-310-NCFN-03	Pilot operated, poppet type	310 (82)		Cartridge	SAE-16-2N	8.10.**240**
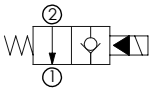	CEBN-060-NAFN-02	Pilot operated, poppet type	60 (8)	350-500 (5000-7200)	Cartridge	SAE-08-2N	8.11.**250**
	CEBN-080-NAFN-02	Pilot operated, poppet type	80 (21)		Cartridge	SAE-10-2N	8.11.**260**
	CEBN-190-NAFN-02	Pilot operated, poppet type	190 (50)		Cartridge	SAE-12-2N	8.11.**270**
	CEBN-310-NAFN-02	Pilot operated, poppet type	310 (82)		Cartridge	SAE-16-2N	8.11.**280**
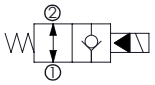	CEBE-040-NAFN-06	Pilot operated, poppet type	40 (11)	350-500 (5000-7200)	Cartridge	SAE-08-2N	8.12.**290**
	CEBN-060-NAFN-06	Pilot operated, poppet type	60 (16)		Cartridge	SAE-08-2N	8.12.**300**
	CEBN-080-NAFN-06	Pilot operated, poppet type	80 (21)		Cartridge	SAE-10-2N	8.12.**310**
	CEBN-190-NAFN-06	Pilot operated, poppet type	190 (50)		Cartridge	SAE-12-2N	8.12.**320**
	CEBN-310-NAFN-06	Pilot operated, poppet type	310 (82)		Cartridge	SAE-16-2N	8.12.**330**

SECTION 8

SOLENOID CARTRIDGES

ATLANTIC Fluid Tech
WWW.SUMY.IR

Hydraulic scheme	Valve description	Valve type	Rated flow l/min (gpm)	Max. pressure bar (psi)	Installation	Main port size or cavity type	Page
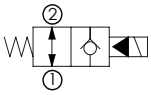	CEBN-060-NAFN-04	Pilot operated, poppet type	60 (16)	350-500 (5000-7200)	Cartridge	SAE-08-2N	8.13.**340**
	CEBN-080-NAFN-04	Pilot operated, poppet type	80 (21)		Cartridge	SAE-10-2N	8.13.**350**
	CEBN-310-NAFN-04	Pilot operated, poppet type	310 (82)		Cartridge	SAE-16-2N	8.13.**360**
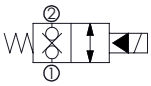	CEBE-040-NCFN-31	Pilot operated, poppet type	40 (11)	350 (5000)	Cartridge	SAE-08-2N	8.14.**370**
	CEBN-060-NCFN-31	Pilot operated, poppet type	60 (16)	350-500 (5000-7200)	Cartridge	SAE-08-2N	8.14.**380**
	CEBN-080-NCFN-31	Pilot operated, poppet type	80 (21)		Cartridge	SAE-10-2N	8.14.**390**
	CEBN-190-NCFN-31	Pilot operated, poppet type	190 (50)		Cartridge	SAE-12-2N	8.14.**400**
	CEBN-310-NCFN-31	Pilot operated, poppet type	310 (82)		Cartridge	SAE-16-2N	8.14.**410**
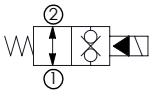	CEBE-040-NAFN-32	Pilot operated, poppet type	40 (11)	350 (5000)	Cartridge	SAE-08-2N	8.15.**420**
	CEBN-060-NAFN-32	Pilot operated, poppet type	60 (16)	350-500 (5000-7200)	Cartridge	SAE-08-2N	8.15.**430**
	CEBN-080-NAFN-32	Pilot operated, poppet type	80 (21)		Cartridge	SAE-10-2N	8.15.**440**
	CEBN-190-NAFN-32	Pilot operated, poppet type	190 (50)		Cartridge	SAE-12-2N	8.15.**450**
	CEBN-310-NAFN-32	Pilot operated, poppet type	310 (82)		Cartridge	SAE-16-2N	8.15.**460**
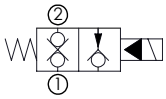	CEBN-060-NCFN-11	Pilot operated, poppet type	60 (16)	350-500 (5000-7200)	Cartridge	SAE-08-2N	8.16.**470**
	CEBN-080-NCFN-11	Pilot operated, poppet type	80 (21)		Cartridge	SAE-10-2N	8.16.**480**
	CEBN-190-NCFN-11	Pilot operated, poppet type	190 (50)		Cartridge	SAE-12-2N	8.16.**490**
	CEBN-310-NCFN-11	Pilot operated, poppet type	310 (82)		Cartridge	SAE-16-2N	8.16.**500**
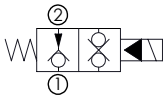	CEBN-060-NAFN-12	Pilot operated, poppet type	60 (16)	350-500 (5000-7200)	Cartridge	SAE-08-2N	8.17.**510**
	CEBN-080-NAFN-12	Pilot operated, poppet type	80 (21)		Cartridge	SAE-10-2N	8.17.**520**
	CEBN-190-NAFN-12	Pilot operated, poppet type	190 (50)		Cartridge	SAE-12-2N	8.17.**530**
	CEBN-310-NAFN-12	Pilot operated, poppet type	310 (82)		Cartridge	SAE-16-2N	8.17.**540**
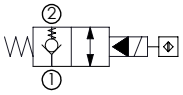	CEBN-060-XCDR-05	Pilot operated, proximity sensor	60 (16)	350 (5000)	Cartridge	SAE-08-2N	8.18.**550**
	CEBN-080-XCDR-05	Pilot operated, proximity sensor	80 (21)		Cartridge	SAE-10-2N	8.18.**560**
	CEBN-190-XCDR-05	Pilot operated, proximity sensor	190 (50)		Cartridge	SAE-12-2N	8.18.**570**
	CEBN-310-XCDR-05	Pilot operated, proximity sensor	310 (82)		Cartridge	SAE-16-2N	8.18.**580**
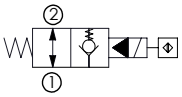	CEBN-060-XADR-06	Pilot operated, proximity sensor	60 (16)	350 (5000)	Cartridge	SAE-08-2N	8.19.**590**
	CEBN-080-XADR-06	Pilot operated, proximity sensor	80 (21)		Cartridge	SAE-10-2N	8.19.**600**
	CEBN-190-XADR-06	Pilot operated, proximity sensor	190 (50)		Cartridge	SAE-12-2N	8.19.**610**
	CEBN-310-XADR-06	Pilot operated, proximity sensor	310 (82)		Cartridge	SAE-16-2N	8.19.**620**
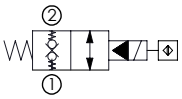	CEBN-060-XCDR-31	Pilot operated, proximity sensor	60 (16)	350 (5000)	Cartridge	SAE-08-2N	8.20.**630**
	CEBN-080-XCDR-31	Pilot operated, proximity sensor	80 (21)		Cartridge	SAE-10-2N	8.20.**640**
	CEBN-190-XCDR-31	Pilot operated, proximity sensor	190 (50)		Cartridge	SAE-12-2N	8.20.**650**
	CEBN-310-XCDR-31	Pilot operated, proximity sensor	310 (82)		Cartridge	SAE-16-2N	8.20.**660**
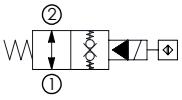	CEBN-060-XADR-32	Pilot operated, proximity sensor	60 (16)	350 (5000)	Cartridge	SAE-08-2N	8.21.**670**
	CEBN-080-XADR-32	Pilot operated, proximity sensor	80 (21)		Cartridge	SAE-10-2N	8.21.**680**
	CEBN-190-XADR-32	Pilot operated, proximity sensor	190 (50)		Cartridge	SAE-12-2N	8.21.**690**
	CEBN-310-XADR-32	Pilot operated, proximity sensor	310 (82)		Cartridge	SAE-16-2N	8.21.**700**

SECTION 8

SOLENOID CARTRIDGES

ATLANTIC Fluid Tech
WWW.SUMY.IR

Hydraulic scheme	Valve description	Valve type	Rated flow l/min (gpm)	Max. pressure bar (psi)	Installation	Main port size or cavity type	Page
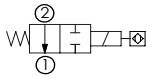	CEBD-040-NAMV CEBD-040-NACV	Direct acting, poppet type	40 (11)	350 (5000)	Cartridge	VP000338	8.22.**710**
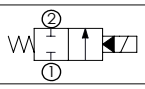	CEBT-350-NCFN-98 CEBT-600-NCFN-98	Piloted operated, spool type Piloted operated, spool type	350 (92) 600 (158)	350 (5000) 350 (5000)	Cartridge Cartridge	SAE-16-2N SAE-20-2N	8.23.**720** 8.23.**730**
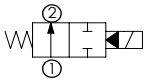	CEBT-350-NAFN-99 CEBT-600-NAFN-99	Piloted operated, spool type Piloted operated, spool type	350 (92) 600 (158)	350 (5000) 350 (5000)	Cartridge Cartridge	SAE-16-2N SAE-20-2N	8.24.**740** 8.24.**750**
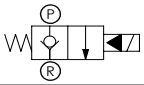	CEBN-015-NCGN CEBN-025-NCGN CEBN-060-NCGN	High pressure, poppet type, flanged body High pressure, poppet type, flanged body High pressure, poppet type, flanged body	15 (4) 25 (7) 60 (16)	600 (8700) 600 (8700) 600 (8700)	Cartridge Cartridge Cartridge	Flanged Flanged Flanged	8.25.**760** 8.25.**770** 8.25.**780**
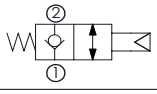	CEBN-060-NCAN-123	Pneumatic operated, poppet type	40 (11)	350 (5000)	Cartridge	SAE-08-2N	8.26.**790**
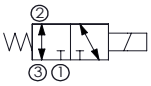	CECS-015-SEFN-61 CECS-030-SEFN-61	Direct acting, spool type Direct acting, spool type	15 (4) 30 (8)	350 (5000) 350 (5000)	Cartridge Cartridge	SAE-08-3N SAE-10-3N	8.27.**840** 8.27.**880**
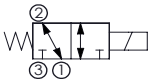	CECS-015-SEFN-62 CECS-030-SEFN-62	Direct acting, spool type Direct acting, spool type	15 (4) 30 (8)	350 (5000) 350 (5000)	Cartridge Cartridge	SAE-08-3N SAE-10-3N	8.28.**850** 8.28.**890**
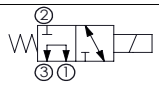	CECS-015-SEFN-63 CECS-030-SEFN-63	Direct acting, spool type Direct acting, spool type	15 (4) 30 (8)	350 (5000) 350 (5000)	Cartridge Cartridge	SAE-08-3N SAE-10-3N	8.29.**860** 8.29.**900**
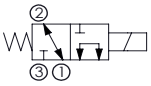	CECS-015-SEFN-64 CECS-030-SEFN-64	Direct acting, spool type Direct acting, spool type	15 (4) 30 (8)	350 (5000) 350 (5000)	Cartridge Cartridge	SAE-08-3N SAE-10-3N	8.30.**870** 8.30.**910**
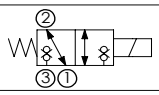	CECD-020-SEFN-66 CECD-030-SEFN-66	Direct acting, spool type Direct acting, spool type	20 (5) 30 (8)	350 (5000) 350 (5000)	Cartridge Cartridge	SAE-08-3N SAE-10-3N	8.31.**920** 8.31.**930**
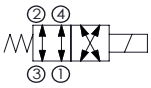	CEDS-015-SEFN-40 CEDS-030-SEFN-40	Direct acting, spool type Direct acting, spool type	15 (4) 30 (8)	350 (5000) 350 (5000)	Cartridge Cartridge	SAE-08-4N SAE-10-4N	8.32.**940** 8.32.**980**
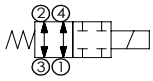	CEDS-015-SEFN-49	Direct acting, spool type	15 (4)	350 (5000)	Cartridge	SAE-08-4N	8.33.**950**
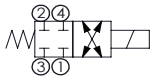	CEDS-015-SEFN-41 CEDS-030-SEFN-41	Direct acting, spool type Direct acting, spool type	15 (4) 30 (8)	350 (5000) 350 (5000)	Cartridge Cartridge	SAE-08-4N SAE-10-4N	8.34.**960** 8.34.**990**
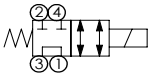	CEDS-015-SEFN-43 CEDS-030-SEFN-43	Direct acting, spool type Direct acting, spool type	15 (4) 30 (8)	350 (5000) 350 (5000)	Cartridge Cartridge	SAE-08-4N SAE-10-4N	8.35.**970** 8.35.**1000**
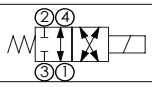	CEDS-030-SEFN-111	Direct acting, spool type	30 (8)	350 (5000)	Cartridge	SAE-10-4N	8.36.**1010**
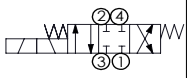	CEES-010-SEFN-51 CEES-030-SEFN-51	Direct acting, spool type Direct acting, spool type	10 (3) 30 (8)	350 (5000) 350 (5000)	Cartridge Cartridge	SAE-08-4N SAE-10-4N	8.37.**1020** 8.37.**1060**
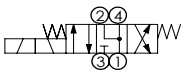	CEES-010-SEFN-52 CEES-030-SEFN-52	Direct acting, spool type Direct acting, spool type	10 (3) 30 (8)	350 (5000) 350 (5000)	Cartridge Cartridge	SAE-08-4N SAE-10-4N	8.38.**1030** 8.38.**1070**
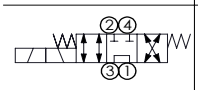	CEES-010-SEFN-53 CEES-030-SEFN-53	Direct acting, spool type Direct acting, spool type	10 (3) 30 (8)	350 (5000) 350 (5000)	Cartridge Cartridge	SAE-08-4N SAE-10-4N	8.39.**1040** 8.39.**1080**
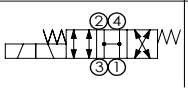	CEES-010-SEFN-54 CEES-030-SEFN-54	Direct acting, spool type Direct acting, spool type	10 (3) 30 (8)	350 (5000) 350 (5000)	Cartridge Cartridge	SAE-08-4N SAE-10-4N	8.40.**1050** 8.40.**1090**

SECTION 8

SOLENOID CARTRIDGES

ATLANTIC Fluid Tech
WWW.SUMY.IR

Hydraulic scheme	Valve description	Valve type	Rated flow l/min (gpm)	Max. pressure bar (psi)	Installation	Main port size or cavity type	Page
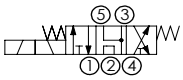	CEFS-010-SEFN-104	Direct acting, spool type	10 (3)	350 (5000)	Cartridge	SAE-08-5N	8.41.**1100**
	CEFS-030-SEFN-104	Direct acting, spool type	30 (8)	350 (5000)	Cartridge	SAE-10-5N	8.41.**1150**
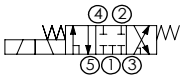	CEFS-010-SEFN-106	Direct acting, spool type	10 (3)	350 (5000)	Cartridge	SAE-08-5N	8.42.**1110**
	CEFS-030-SEFN-106	Direct acting, spool type	30 (8)	350 (5000)	Cartridge	SAE-10-5N	8.42.**1160**
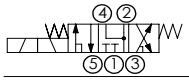	CEFS-010-SEFN-107	Direct acting, spool type	10 (3)	350 (5000)	Cartridge	SAE-08-5N	8.43.**1120**
	CEFS-030-SEFN-107	Direct acting, spool type	30 (8)	350 (5000)	Cartridge	SAE-10-5N	8.43.**1170**
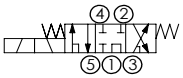	CEFS-010-SEFN-108	Direct acting, spool type	10 (3)	350 (5000)	Cartridge	SAE-08-5N	8.44.**1130**
	CEFS-030-SEFN-108	Direct acting, spool type	30 (8)	350 (5000)	Cartridge	SAE-10-5N	8.44.**1180**
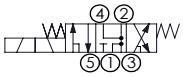	CEFS-010-SEFN-115	Direct acting, spool type	10 (3)	350 (5000)	Cartridge	SAE-08-5N	8.45.**1140**
	CEFS-030-SEFN-115	Direct acting, spool type	30 (8)	350 (5000)	Cartridge	SAE-10-5N	8.45.**1190**

SOLENOID OPERATED CARTRIDGE

CEBD-001-NCFN-15

DIRECT OPERATED
POPPET TYPE

ATLANTIC Fluid Tech
WWW.SUMY.IR

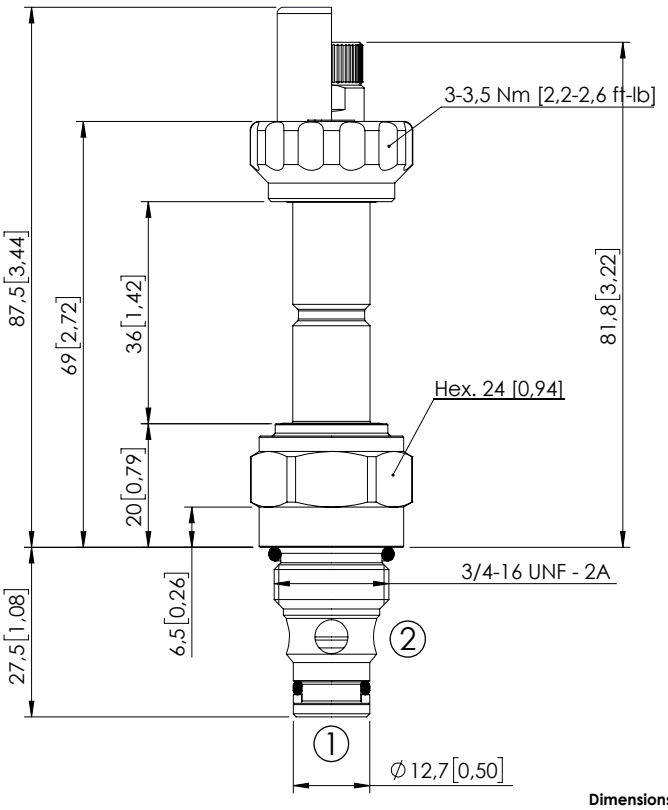

Dimensions: mm [inches]

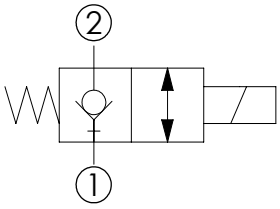

SPECIFICATIONS

Max. operating pressure:	350/500 bar (5000/7200 psi)
Rated flow:	1,5 l/min (0,4 gpm)
Cavity:	SAE-08-2N
Weight:	0,15 kg (0,33 lbs)
Min. voltage required:	90% of nominal
Coil type:	M7 or M3 type
Ambient temperature:	-20/+50 °C (-4/+122 °F)
Contamination class to ISO 4406:	See technical spec.
Seal kit:	RA900081
Installation torque:	45 - 50 Nm (33 - 37 ft-lb)
MTTFd:	150 - 1200 years: See technical spec.

NOTES

For other configurations/quick codes not available in this catalogue page please consult factory

PATENT PENDING

OPTIONS

Standard

Knob style override

SEALING CAP

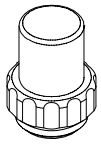

Ordering code:
AT000113

CURVES

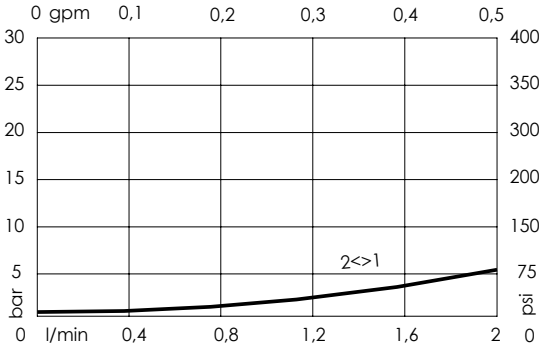

ORDERING CODES

Quick code	Description	Options	Max operating pressure	
CE000200	CEBD-001-NCFN-15-S08-N350	Standard	350 bar (5000 psi)	
CE000201	CEBD-001-NCFK-15-S08-N350	Knob style override	350 bar (5000 psi)	
CE000500	CEBD-001-NCFN-15-S08-N500	Standard	500 bar (7200 psi)	
CE000501	CEBD-001-NCFK-15-S08-N500	Knob style override	500 bar (7200 psi)	

Revision E1

SOLENOID OPERATED CARTRIDGE

CEBD-001-NCFN-15

DIRECT OPERATED
POPPET TYPE

ATLANTIC Fluid Tech
WWW.SUMY.IR

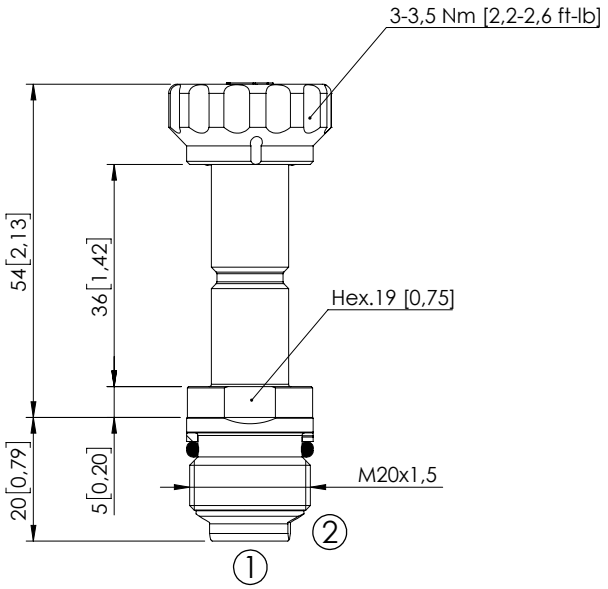

Dimensions: mm [inches]

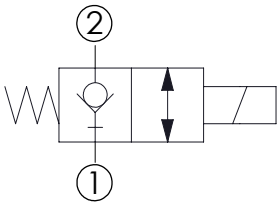

SPECIFICATIONS

Max. operating pressure:	350 bar (5000 psi)
Rated flow:	1 l/min (0,3 gpm)
Cavity:	VP000445
Weight:	0,1 kg (0,3 lbs)
Min. voltage required:	90% of nominal
Coil type:	M7 or M3 type
Ambient temperature:	-20/+50 °C (-4/+122 °F)
Contamination class to ISO 4406:	See technical spec.
Seal kit:	RC700445
Installation torque:	40 - 45 Nm (30 - 33 ft-lb)
MTTFd:	150 - 1200 years: See technical spec.

NOTES

For other configurations/quick codes not available in this catalogue page please consult factory

CURVES

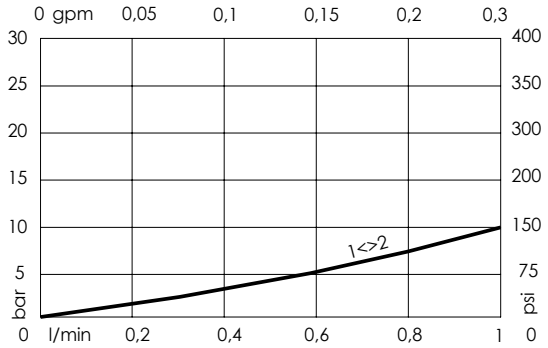

ORDERING CODES

Quick code	Description	Options	Max operating pressure	
CE000870	CEBD-001-NCFN-15-445-N350	Standard	350 bar (5000 psi)	

Revision C1

SOLENOID OPERATED CARTRIDGE

CEBD-001-NCFN-16

DIRECT OPERATED POPPET TYPE

ATLANTIC Fluid Tech
WWW.SUMY.IR

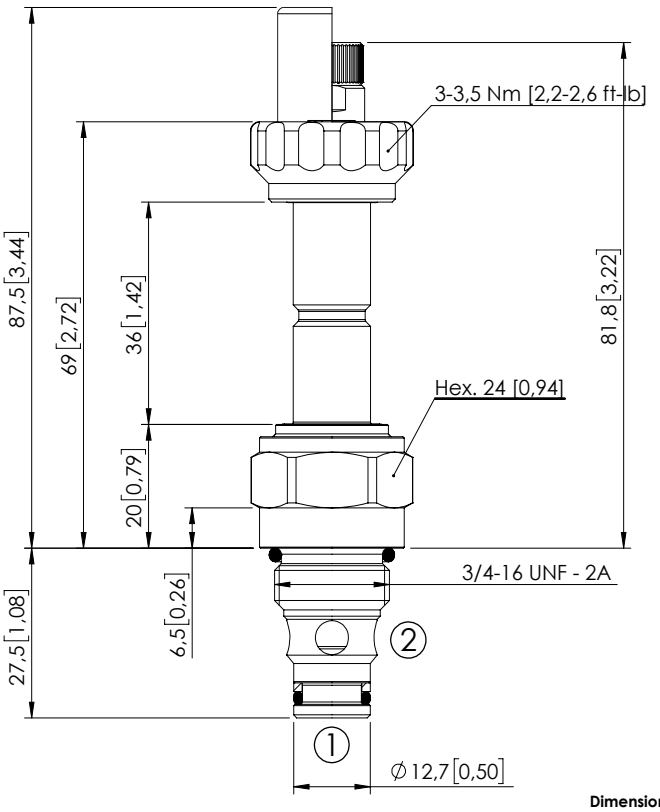

Dimensions: mm [inches]

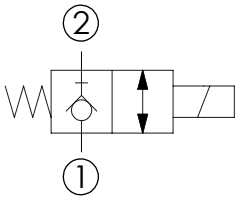

SPECIFICATIONS

Max. operating pressure:	350/500 bar (5000/7200 psi)
Rated flow:	1,5 l/min (0,4 gpm)
Cavity:	SAE-08-2N
Weight:	0,15 kg (0,33 lbs)
Min. voltage required:	90% of nominal
Coil type:	M7 or M3 type
Ambient temperature:	-20/+50 °C (-4/+122 °F)
Contamination class to ISO 4406:	See technical spec.
Seal kit:	RA900081
Installation torque:	45 - 50 Nm (33 - 37 ft-lb)
MTTFd:	150 - 1200 years: See technical spec.

NOTES

For other configurations/quick codes not available in this catalogue page please consult factory

PATENT PENDING

OPTIONS

Standard

Knob style override

SEALING CAP

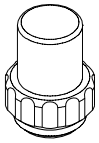

Ordering code:
AT000113

CURVES

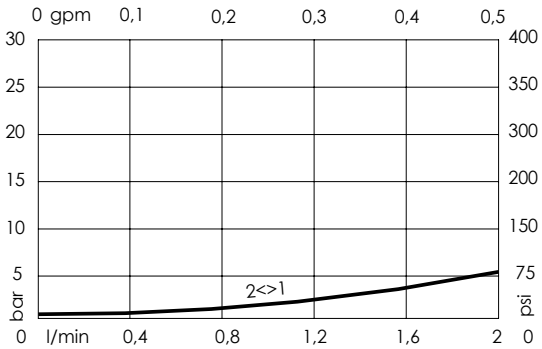

ORDERING CODES

Quick code	Description	Options	Max operating pressure	
CE000202	CEBD-001-NCFN-16-S08-N350	Standard	350 bar (5000 psi)	
CE000203	CEBD-001-NCFK-16-S08-N350	Knob style override	350 bar (5000 psi)	
CE000502	CEBD-001-NCFN-16-S08-N500	Standard	500 bar (7200 psi)	
CE000503	CEBD-001-NCFK-16-S08-N500	Knob style override	500 bar (7200 psi)	

Revision F1

SOLENOID OPERATED CARTRIDGE

CEBD-001-NCFN-16

DIRECT OPERATED
POPPET TYPE

ATLANTIC Fluid Tech
WWW.SUMY.IR

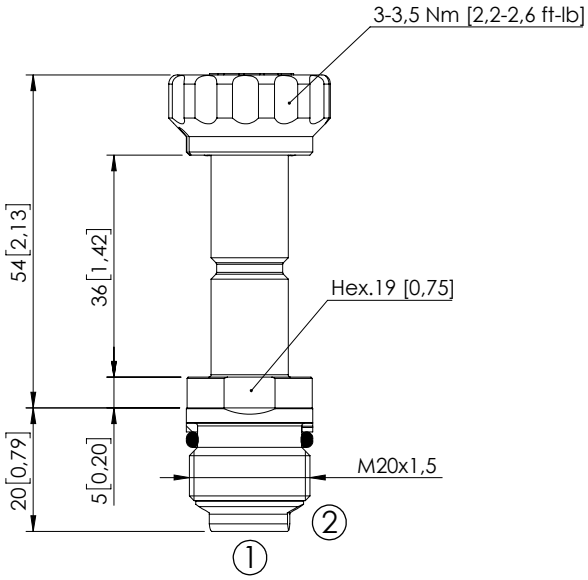

Dimensions: mm [inches]

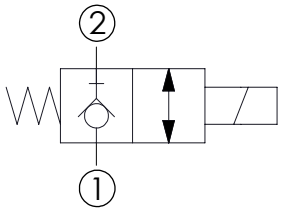

SPECIFICATIONS

Max. operating pressure:	350 bar (5000 psi)
Rated flow:	1 l/min (0,3 gpm)
Cavity:	VP000445
Weight:	0,1 kg (0,3 lbs)
Min. voltage required:	90% of nominal
Coil type:	M7 or M3 type
Ambient temperature:	-20/+50 °C (-4/+122 °F)
Contamination class to ISO 4406:	See technical spec.
Seal kit:	RC700445
Installation torque:	40 - 45 Nm (30 - 33 ft-lb)
MTTFd:	150 - 1200 years: See technical spec.

NOTES

For other configurations/quick codes not available in this catalogue page please consult factory

CURVES

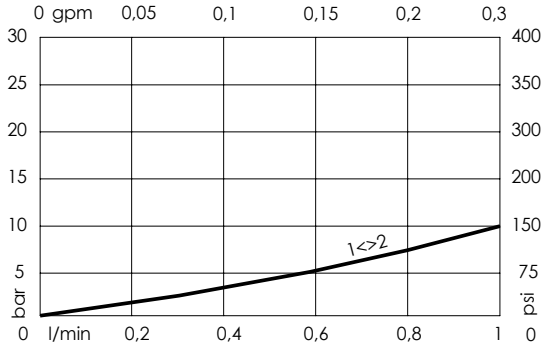

ORDERING CODES

Quick code	Description	Options	Max operating pressure	
CE000871	CEBD-001-NCFN-16-445-N350	Standard	350 bar (5000 psi)	

Revision C1

SOLENOID OPERATED CARTRIDGE

CEBD-001-NAFN-13

DIRECT OPERATED
POPPET TYPE

ATLANTIC Fluid Tech
WWW.SUMY.IR

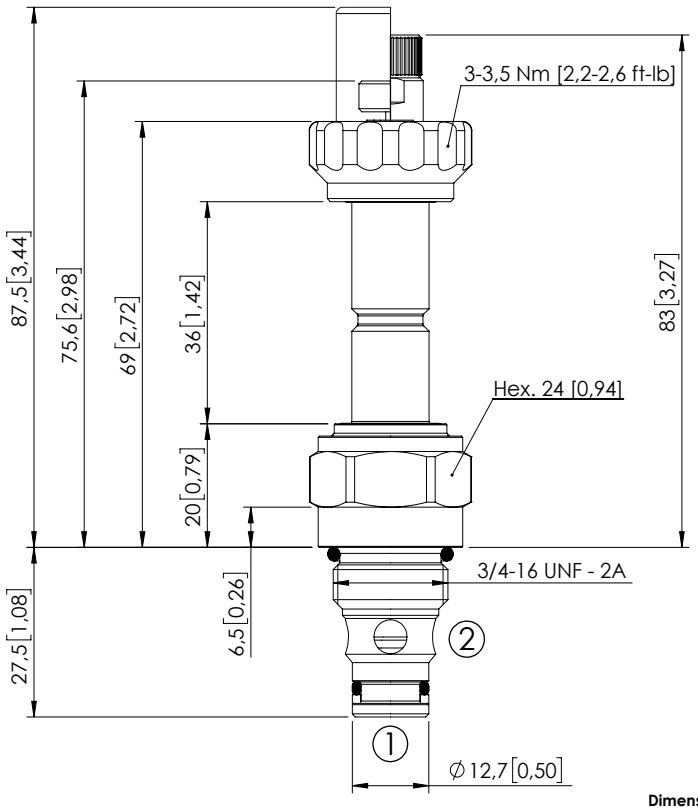

Dimensions: mm [inches]

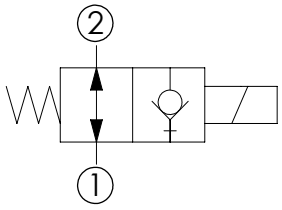

SPECIFICATIONS

Max. operating pressure:	350/500 bar (5000/7200 psi)
Rated flow:	1,5 l/min (0,4 gpm)
Cavity:	SAE-08-2N
Weight:	0,15 kg (0,33 lbs)
Min. voltage required:	90% of nominal
Coil type:	M7 or M3 type
Ambient temperature:	-20/+50 °C (-4/+122 °F)
Contamination class to ISO 4406:	See technical spec.
Seal kit:	RA900081
Installation torque:	45 - 50 Nm (33 - 37 ft-lb)
MTTFd:	150 - 1200 years: See technical spec.

NOTES

For other configurations/quick codes not available in this catalogue page please consult factory

PATENT PENDING

OPTIONS

Standard

Push style override

Knob style override

SEALING CAP

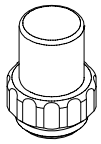

Ordering code:
AT000113

CURVES

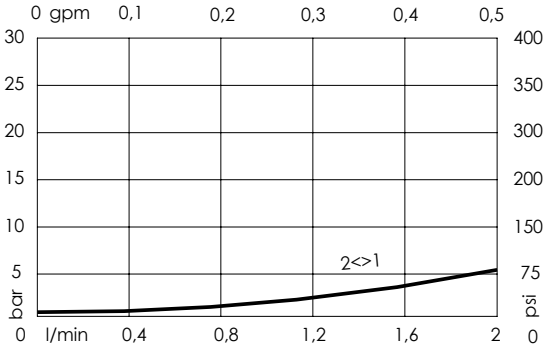

ORDERING CODES

Quick code	Description	Options	Max operating pressure	
CE000204	CEBD-001-NAFN-13-S08-N350	Standard	350 bar (5000 psi)	
CE000205	CEBD-001-NAFP-13-S08-N350	Push style override	350 bar (5000 psi)	
CE000206	CEBD-001-NAFK-13-S08-N350	Knob style override	350 bar (5000 psi)	
CE000504	CEBD-001-NAFN-13-S08-N500	Standard	500 bar (7200 psi)	
CE000505	CEBD-001-NAFP-13-S08-N500	Push style override	500 bar (7200 psi)	
CE000506	CEBD-001-NAFK-13-S08-N500	Knob style override	500 bar (7200 psi)	

Revision E1

SOLENOID OPERATED CARTRIDGE

CEBD-001-NAFN-13

DIRECT OPERATED
POPPET TYPE

ATLANTIC Fluid Tech
WWW.SUMY.IR

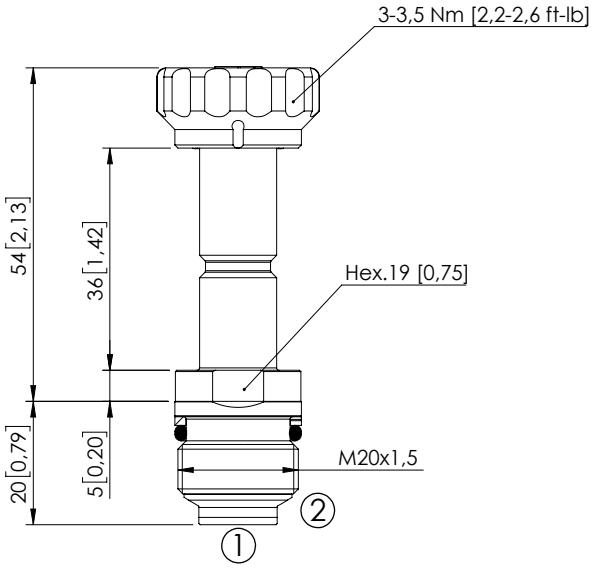

Dimensions: mm [inches]

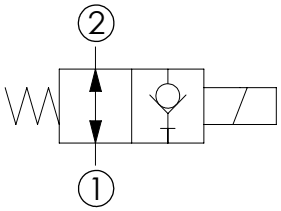

SPECIFICATIONS

Max. operating pressure:	350 bar (5000 psi)
Rated flow:	1 l/min (0,3 gpm)
Cavity:	VP000445
Weight:	0,1 kg (0,3 lbs)
Min. voltage required:	90% of nominal
Coil type:	M7 or M3 type
Ambient temperature:	-20/+50 °C (-4/+122 °F)
Contamination class to ISO 4406:	See technical spec.
Seal kit:	RC700445
Installation torque:	40 - 45 Nm (30 - 33 ft-lb)
MTTFd:	150 - 1200 years: See technical spec.

NOTES

For other configurations/quick codes not available in this catalogue page please consult factory

CURVES

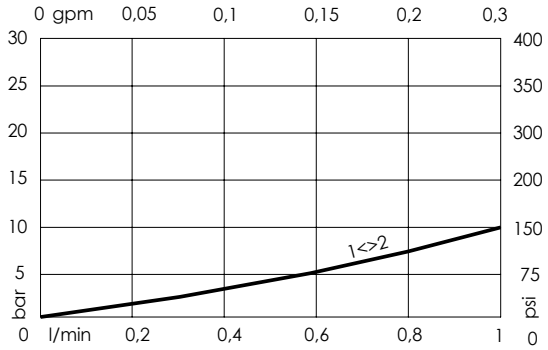

ORDERING CODES

Quick code	Description	Options	Max operating pressure	
CE000872	CEBD-001-NAFN-13-445-N350	Standard	350 bar (5000 psi)	

Revision C1

SOLENOID OPERATED CARTRIDGE

CEBD-001-NAFN-14

DIRECT OPERATED
POPPET TYPE

ATLANTIC Fluid Tech
WWW.SUMY.IR

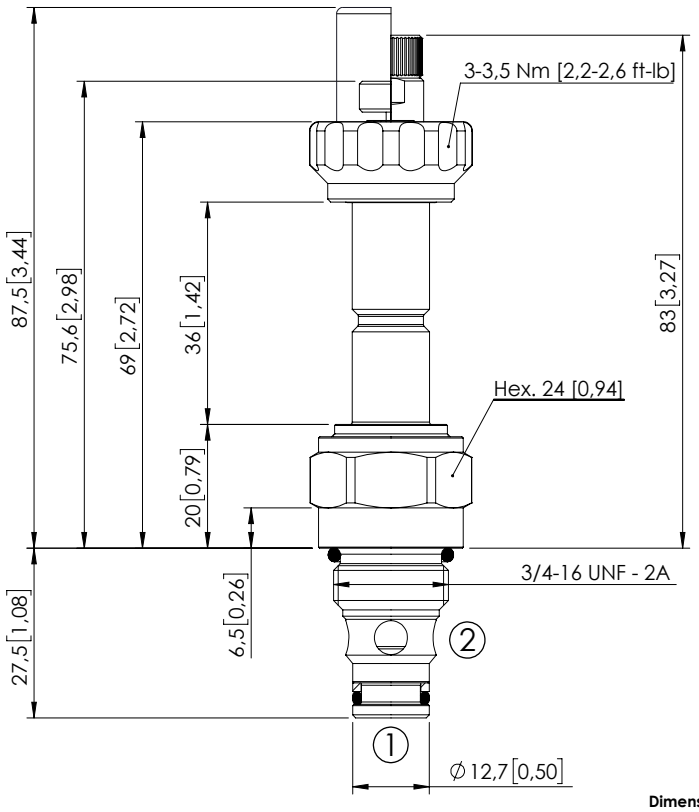

Dimensions: mm [inches]

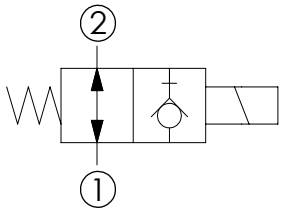

SPECIFICATIONS

Max. operating pressure:	350/500 bar (5000/7200 psi)
Rated flow:	1,5 l/min (0,4 gpm)
Cavity:	SAE-08-2N
Weight:	0,15 kg (0,33 lbs)
Min. voltage required:	90% of nominal
Coil type:	M7 or M3 type
Ambient temperature:	-20/+50 °C (-4/+122 °F)
Contamination class to ISO 4406:	See technical spec.
Seal kit:	RA900081
Installation torque:	45 - 50 Nm (33 - 37 ft-lb)
MTTFd:	150 - 1200 years: See technical spec.

NOTES

For other configurations/quick codes not available in this catalogue page please consult factory

PATENT PENDING

OPTIONS

Standard

Push style override

Knob style override

SEALING CAP

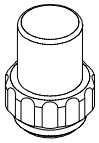

Ordering code:
AT000113

CURVES

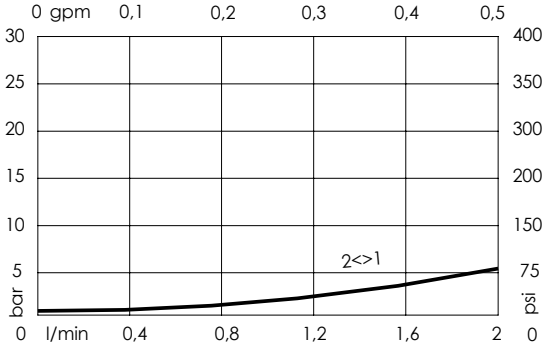

ORDERING CODES

Quick code	Description	Options	Max operating pressure	
CE000207	CEBD-001-NAFN-14-S08-N350	Standard	350 bar (5000 psi)	
CE000208	CEBD-001-NAFP-14-S08-N350	Push style override	350 bar (5000 psi)	
CE000209	CEBD-001-NAFK-14-S08-N350	Knob style override	350 bar (5000 psi)	
CE000507	CEBD-001-NAFN-14-S08-N500	Standard	500 bar (7200 psi)	
CE000508	CEBD-001-NAFP-14-S08-N500	Push style override	500 bar (7200 psi)	
CE000509	CEBD-001-NAFK-14-S08-N500	Knob style override	500 bar (7200 psi)	

Revision E1

SOLENOID OPERATED CARTRIDGE

CEBD-001-NAFN-14

DIRECT OPERATED
POPPET TYPE

ATLANTIC Fluid Tech
WWW.SUMY.IR

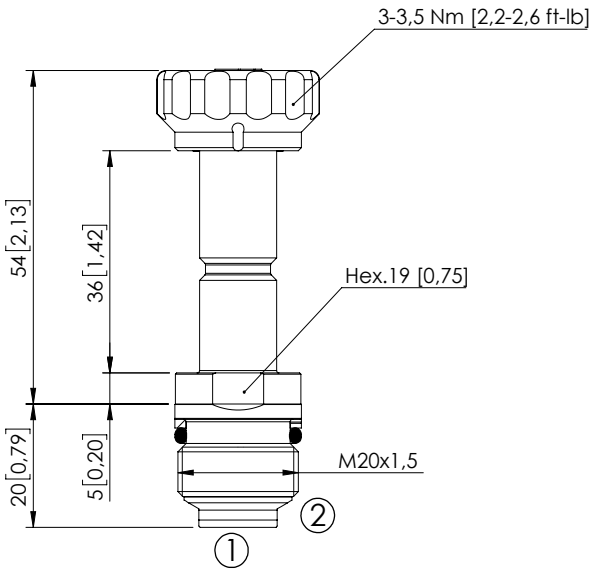

Dimensions: mm [inches]

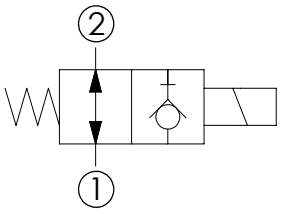

SPECIFICATIONS

Max. operating pressure:	350 bar (5000 psi)
Rated flow:	1 l/min (0,3 gpm)
Cavity:	VP000445
Weight:	0,1 kg (0,3 lbs)
Min. voltage required:	90% of nominal
Coil type:	M7 or M3 type
Ambient temperature:	-20/+50 °C (-4/+122 °F)
Contamination class to ISO 4406:	See technical spec.
Seal kit:	RC700445
Installation torque:	40 - 45 Nm (30 - 33 ft-lb)
MTTFd:	150 - 1200 years: See technical spec.

NOTES

For other configurations/quick codes not available in this catalogue page please consult factory

CURVES

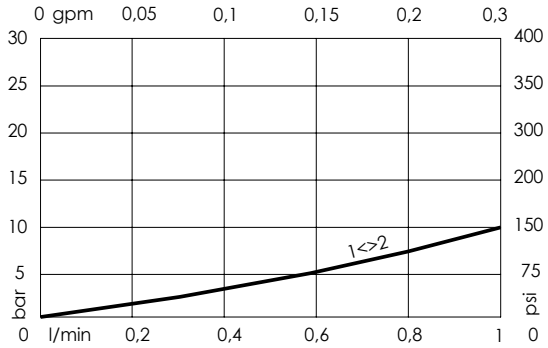

ORDERING CODES

Quick code	Description	Options	Max operating pressure	
CE000873	CEBD-001-NAFN-14-445-N350	Standard	350 bar (5000 psi)	

Revision C1

SOLENOID OPERATED CARTRIDGE

CEBS-010-NCFN-22

DIRECT OPERATED
SPOOL TYPE

ATLANTIC Fluid Tech
WWW.SUMY.IR

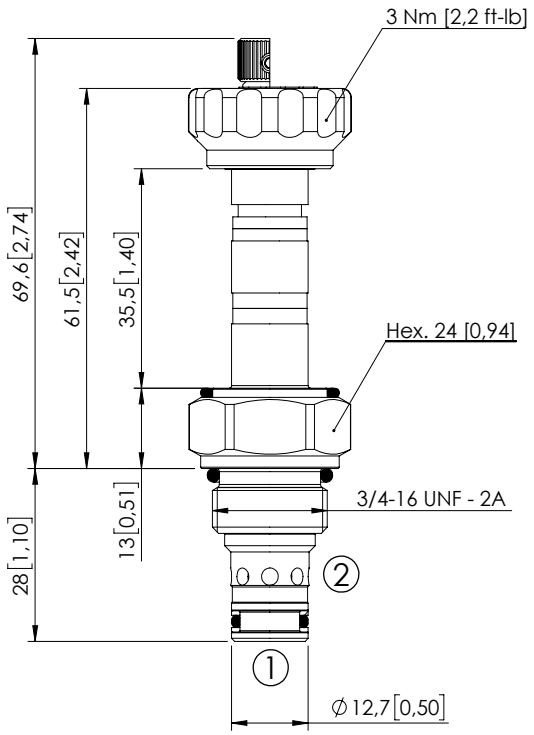

Dimensions: mm [inches]

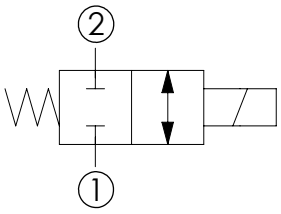

SPECIFICATIONS

Max. operating pressure:	210 bar (3000 psi)
Rated flow:	10 l/min (3 gpm)
Cavity:	SAE-08-2N
Weight:	0,12 kg (0,26 lbs)
Min. voltage required:	90% of nominal
Coil type:	M7 or M3 type
Ambient temperature:	-20/+50 °C (-4/+122 °F)
Contamination class to ISO 4406:	See technical spec.
Seal kit:	RB700081
Installation torque:	45 - 50 Nm (33 - 37 ft-lb)
MTTFd:	150 - 1200 years: See technical spec.

NOTES

For other configurations/quick codes not available in this catalogue page please consult factory

OPTIONS

Standard

Knob style override

CURVES

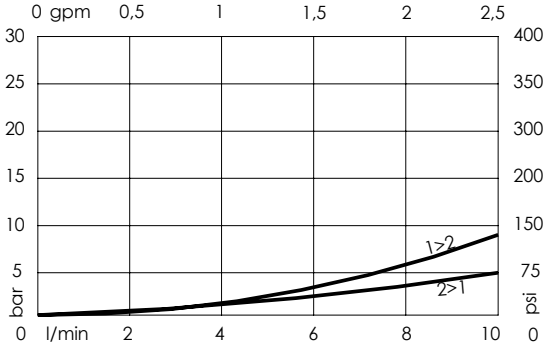

ORDERING CODES

Quick code	Description	Options	Max operating pressure	
CE000092	CEBS-010-NCFN-22-S08-N210	Standard	210 bar (3000 psi)	
CE000093	CEBS-010-NCFE-22-S08-N210	Knob style override	210 bar (3000 psi)	

Revision C1

SOLENOID OPERATED CARTRIDGE

CEBS-010-NAFN-23

DIRECT OPERATED
SPOOL TYPE

ATLANTIC Fluid Tech
WWW.SUMY.IR

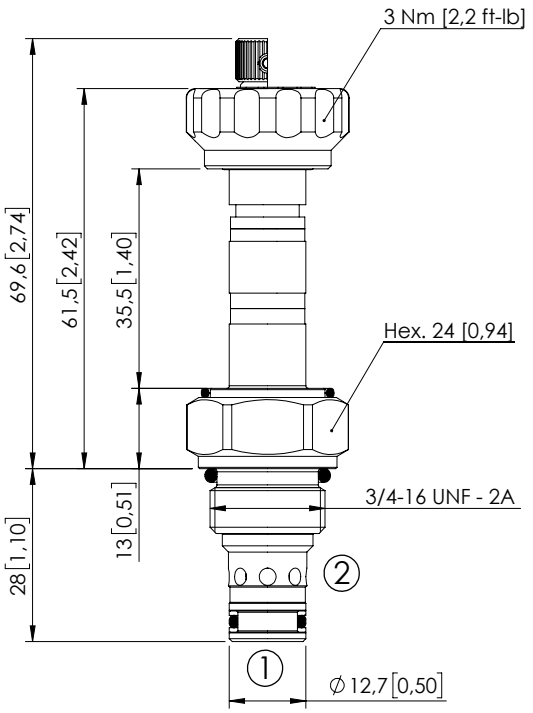

Dimensions: mm [inches]

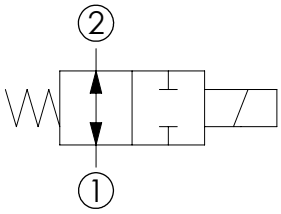

SPECIFICATIONS

Max. operating pressure:	210 bar (3000 psi)
Rated flow:	10 l/min (3 gpm)
Cavity:	SAE-08-2N
Weight:	0,12 kg (0,26 lbs)
Min. voltage required:	90% of nominal
Coil type:	M7 or M3 type
Ambient temperature:	-20/+50 °C (-4/+122 °F)
Contamination class to ISO 4406:	See technical spec.
Seal kit:	RB700081
Installation torque:	45 - 50 Nm (33 - 37 ft-lb)
MTTFd:	150 - 1200 years: See technical spec.

NOTES

For other configurations/quick codes not available in this catalogue page please consult factory

OPTIONS

Standard

Knob style override

CURVES

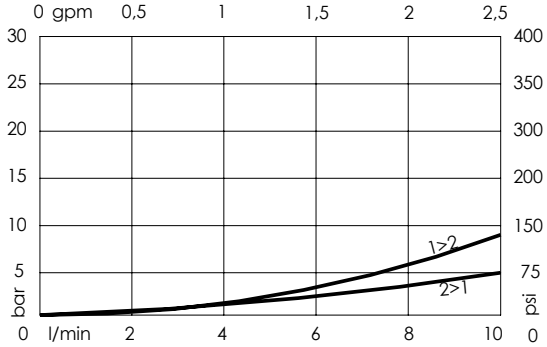

ORDERING CODES

Quick code	Description	Options	Max operating pressure	
CE000090	CEBS-010-NAFN-23-S08-N210	Standard	210 bar (3000 psi)	
CE000091	CEBS-010-NAFE-23-S08-N210	Knob style override	210 bar (3000 psi)	

Revision C1

SOLENOID OPERATED CARTRIDGE

CEBD-015-NCFN-21

DIRECT OPERATED
POPPET TYPE

ATLANTIC Fluid Tech
WWW.SUMY.IR

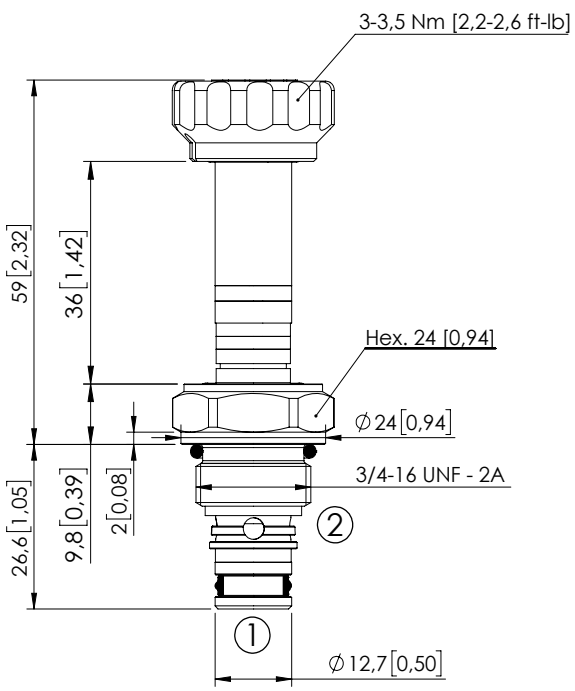

Dimensions: mm [inches]

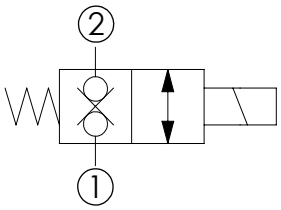

SPECIFICATIONS

Max. operating pressure:	350 bar (5000 psi)
Max. operating pressure on port 1:	280 bar (4000 psi)
Rated flow:	15 l/min (4 gpm)
Cavity:	SAE-08-2N
Weight:	0,1 kg (0,22 lbs)
Min. voltage required:	90% of nominal
Coil type:	M7 or M3 type
Ambient temperature:	-20/+50 °C (-4/+122 °F)
Contamination class to ISO 4406:	See technical spec.
Seal kit:	RA700081
Installation torque:	45 - 50 Nm (33 - 37 ft-lb)
MTTFd:	150 - 1200 years: See technical spec.

NOTES

For other configurations/quick codes not available in this catalogue page please consult factory

OPTIONS

Standard

CURVES

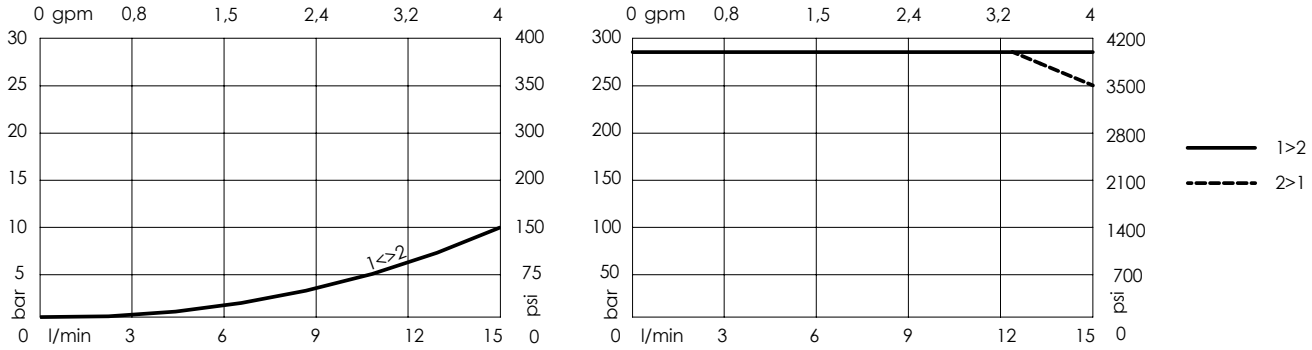

ORDERING CODES

Quick code	Description	Options
CE000966	CEBD-015-NCFN-21-S08-N350	Standard

Revision B

SOLENOID OPERATED CARTRIDGE

CEBN-060-NCFF-01

PILOT OPERATED
POPPET TYPE

ATLANTIC Fluid Tech
WWW.SUMY.IR

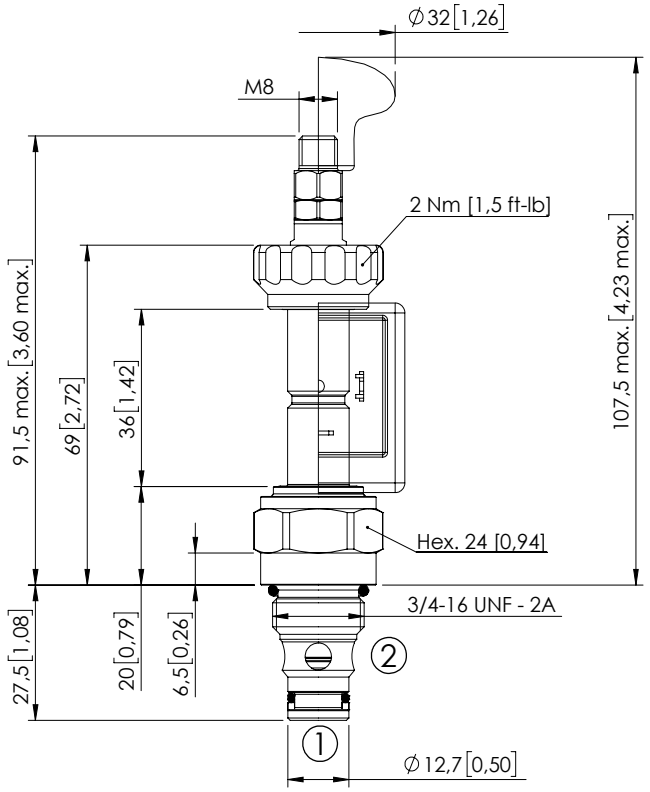

Dimensions: mm [inches]

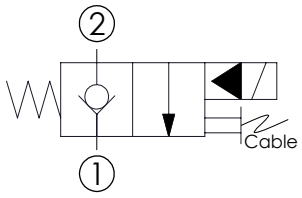

SPECIFICATIONS

Max. operating pressure:	350 bar (5000 psi)
Rated flow:	60 l/min (16 gpm)
Cavity:	SAE-08-2N
Weight:	0,16 kg (0,35 lbs)
Min. voltage required:	90% of nominal
Coil type:	M7 or M3 type
Ambient temperature:	-30/+50 °C (-22/+122 °F)
Contamination class to ISO 4406:	See technical spec.
Seal kit:	RA900081
Installation torque:	45 - 50 Nm (33 - 37 ft-lb)
MTTFd:	150 - 1200 years: See technical spec.

NOTES

For other configurations/quick codes not available in this catalogue page please consult factory

OPTIONS

Cable override

Hand Operated

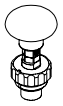

CURVES

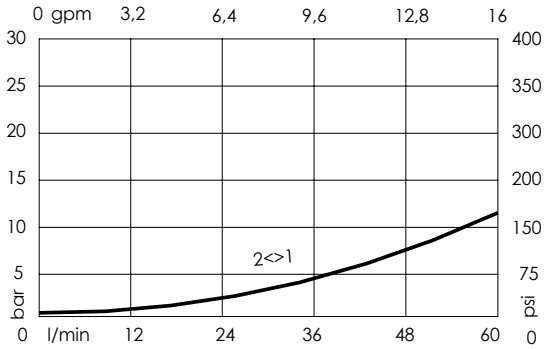

ORDERING CODES

Quick code	Description	Options	Max operating pressure	Connector	Voltage
CE000470	CEBN-060-NCFF-01-S08-N350	Cable override	350 bar (5000 psi)	No	No
CE001172	CEBN-060-NCFM-01-S08-N350-12HR	Hand Operated	350 bar (5000 psi)	DIN 43650	12V
CE001173	CEBN-060-NCFM-01-S08-N350-24HR	Hand Operated	350 bar (5000 psi)	DIN 43650	24V

Revision C1

SOLENOID OPERATED CARTRIDGE

CEBN-060-NCFN-01

PILOT OPERATED
POPPET TYPE

ATLANTIC Fluid Tech
WWW.SUMY.IR

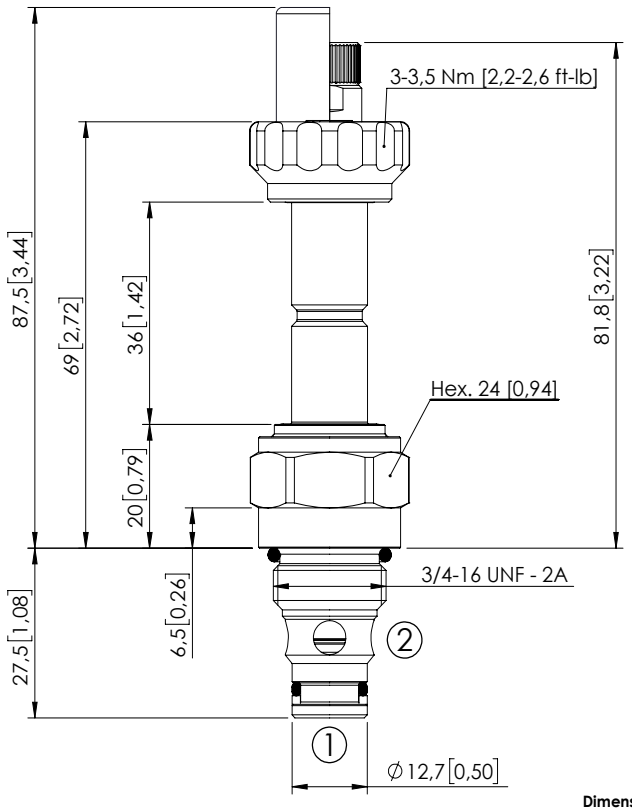

Dimensions: mm [inches]

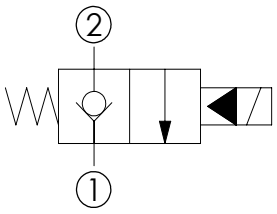

SPECIFICATIONS

Max. operating pressure:	350/500 bar (5000/7200 psi)
Rated flow:	60 l/min (16 gpm)
Cavity:	SAE-08-2N
Weight:	0,15 kg (0,33 lbs)
Min. voltage required:	90% of nominal
Coil type:	M7 or M3 type
Ambient temperature:	-20/+50 °C (-4/+122 °F)
Contamination class to ISO 4406:	See technical spec.
Seal kit:	RA900081
Installation torque:	45 - 50 Nm (33 - 37 ft-lb)
MTTFd:	150 - 1200 years: See technical spec.

NOTES

For other configurations/quick codes not available in this catalogue page please consult factory

PATENT PENDING

OPTIONS

Standard

Knob style override

SEALING CAP

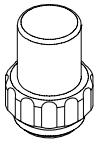

Ordering code:
AT000113

CURVES

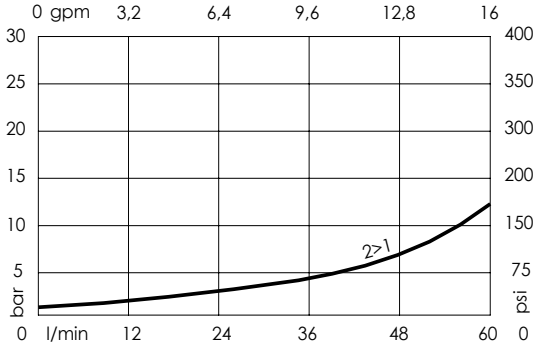

ORDERING CODES

Quick code	Description	Options	Max operating pressure	
CE000210	CEBN-060-NCFN-01-S08-N350	Standard	350 bar (5000 psi)	
CE000212	CEBN-060-NCFK-01-S08-N350	Knob style override	350 bar (5000 psi)	
CE000510	CEBN-060-NCFN-01-S08-N500	Standard	500 bar (7200 psi)	
CE000512	CEBN-060-NCFK-01-S08-N500	Knob style override	500 bar (7200 psi)	

Revision G1

SOLENOID OPERATED CARTRIDGE

CEBN-080-NCFN-01

PILOT OPERATED
POPPET TYPE

ATLANTIC Fluid Tech
WWW.SUMY.IR

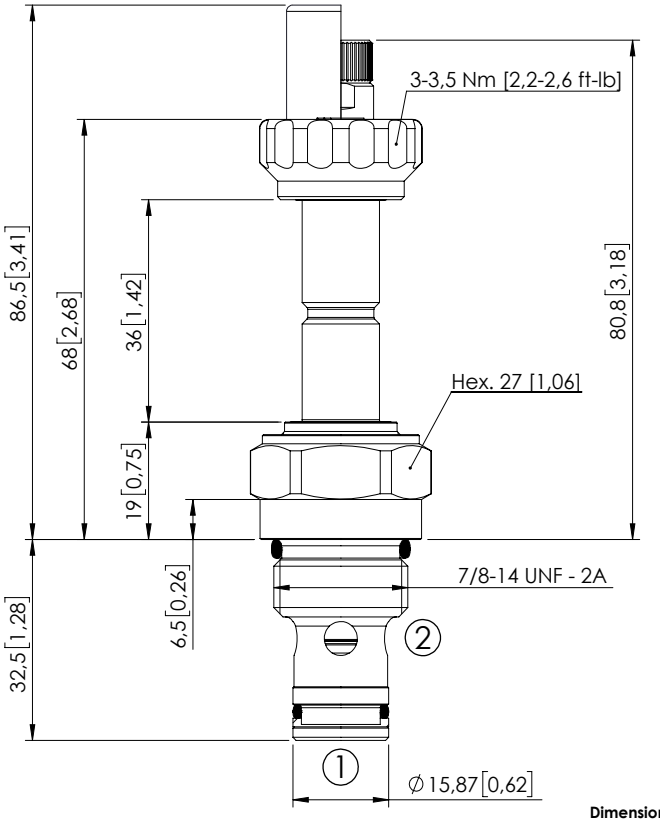

Dimensions: mm [inches]

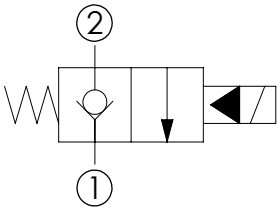

SPECIFICATIONS

Max. operating pressure:	350/500 bar (5000/7200 psi)
Rated flow:	80 l/min (21 gpm)
Cavity:	SAE-10-2N
Weight:	0,18 kg (0,40 lbs)
Min. voltage required:	90% of nominal
Coil type:	M7 or M3 type
Ambient temperature:	-20/+50 °C (-4/+122 °F)
Contamination class to ISO 4406:	See technical spec.
Seal kit:	RA900082
Installation torque:	55 - 62 Nm (401 - 46 ft-lb)
MTTFd:	150 - 1200 years: See technical spec.

NOTES

For other configurations/quick codes not available in this catalogue page please consult factory

PATENT PENDING

OPTIONS

Standard

Knob style override

SEALING CAP

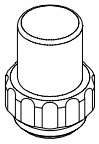

Ordering code:
AT000113

CURVES

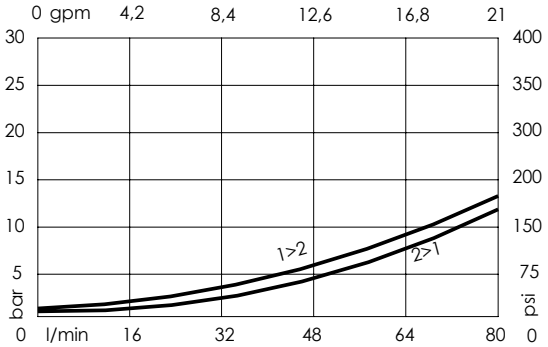

ORDERING CODES

Quick code	Description	Options	Max operating pressure	
CE000245	CEBN-080-NCFN-01-S10-N350	Standard	350 bar (5000 psi)	
CE000247	CEBN-080-NCFK-01-S10-N350	Knob style override	350 bar (5000 psi)	
CE000545	CEBN-080-NCFN-01-S10-N500	Standard	500 bar (7200 psi)	
CE000547	CEBN-080-NCFK-01-S10-N500	Knob style override	500 bar (7200 psi)	

Revision G1

SOLENOID OPERATED CARTRIDGE

CEBN-190-NCFN-01

PILOT OPERATED POPPET TYPE

ATLANTIC Fluid Tech
WWW.SUMY.IR

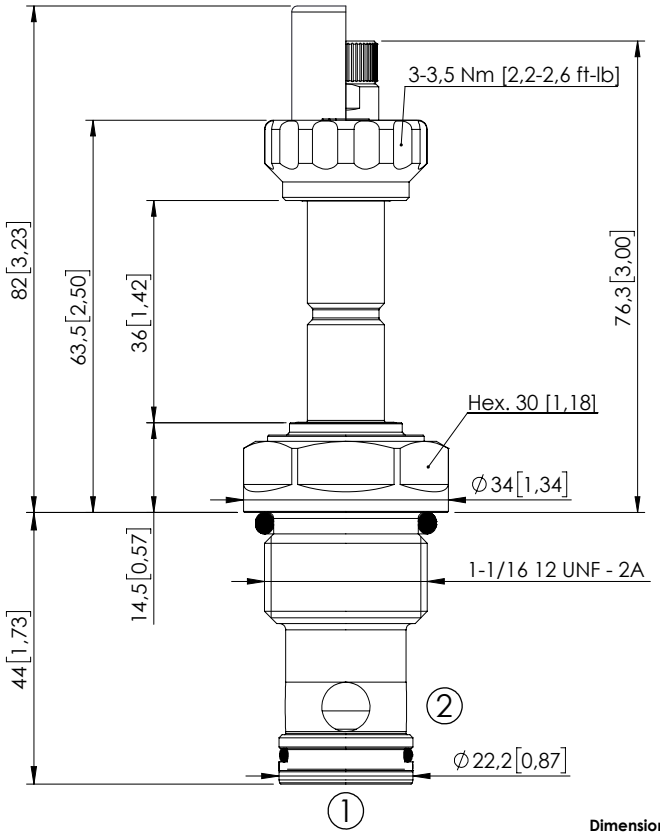

Dimensions: mm [inches]

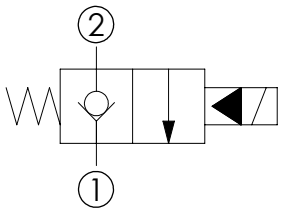

SPECIFICATIONS

Max. operating pressure:	350/500 bar (5000/7200 psi)
Rated flow:	190 l/min (50 gpm)
Cavity:	SAE-12-2N
Weight:	0,25 kg (0,55 lbs)
Min. voltage required:	90% of nominal
Coil type:	M7 or M3 type
Ambient temperature:	-20/+50 °C (-4/+122 °F)
Contamination class to ISO 4406:	See technical spec.
Seal kit:	RA900083
Installation torque:	135 - 150 Nm (100 - 111 ft-lb)
MTTFd:	150 - 1200 years: See technical spec.

NOTES

For other configurations/quick codes not available in this catalogue page please consult factory

PATENT PENDING

OPTIONS

Standard

Knob style override

SEALING CAP

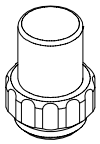

Ordering code:
AT000113

CURVES

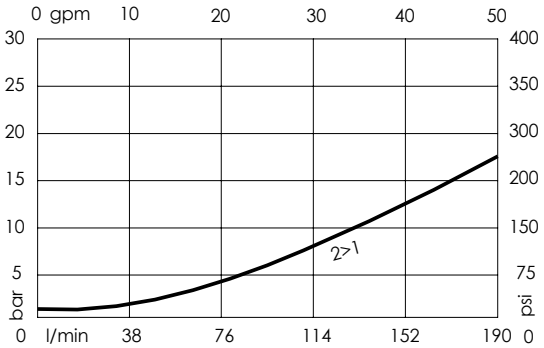

ORDERING CODES

Quick code	Description	Options	Max operating pressure	
CE000315	CEBN-190-NCFN-01-S12-N350	Standard	350 bar (5000 psi)	
CE000317	CEBN-190-NCFK-01-S12-N350	Knob style override	350 bar (5000 psi)	
CE000615	CEBN-190-NCFN-01-S12-N500	Standard	500 bar (7200 psi)	
CE000617	CEBN-190-NCFK-01-S12-N500	Knob style override	500 bar (7200 psi)	

Revision F1

SOLENOID OPERATED CARTRIDGE

CEBN-310-NCFN-01

PILOT OPERATED POPPET TYPE

ATLANTIC Fluid Tech
WWW.SUMY.IR

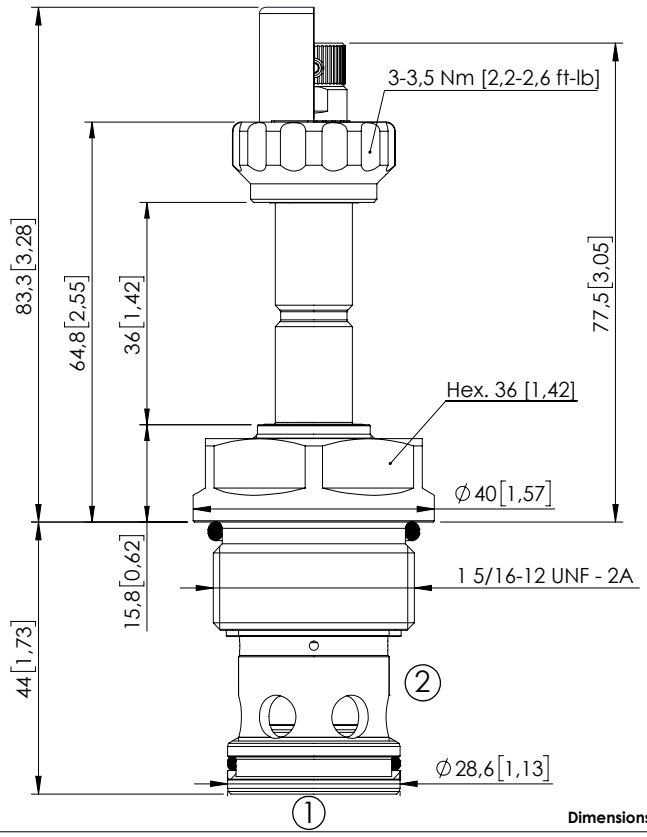

Dimensions: mm [inches]

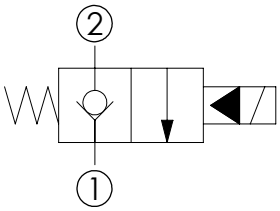

SPECIFICATIONS

Max. operating pressure:	350/500 bar (5000/7200 psi)
Rated flow:	310 l/min (82 gpm)
Cavity:	SAE-16-2N
Weight:	0,36 kg (0,79 lbs)
Min. voltage required:	90% of nominal
Coil type:	M7 or M3 type
Ambient temperature:	-20/+50 °C (-4/+122 °F)
Contamination class to ISO 4406:	See technical spec.
Seal kit:	RA900084
Installation torque:	200 - 210 Nm (148 - 155 ft-lb)
MTTFd:	150 - 1200 years: See technical spec.

NOTES

For other configurations/quick codes not available in this catalogue page please consult factory

PATENT PENDING

OPTIONS

Standard

Knob style override

SEALING CAP

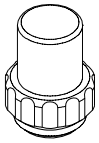

Ordering code:
AT000113

CURVES

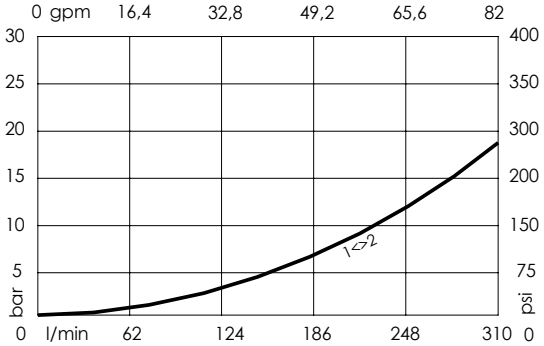

ORDERING CODES

Quick code	Description	Options	Max operating pressure	
CE000385	CEBN-310-NCFN-01-S16-N350	Standard	350 bar (5000 psi)	
CE000387	CEBN-310-NCFK-01-S16-N350	Knob style override	350 bar (5000 psi)	
CE000685	CEBN-310-NCFN-01-S16-N500	Standard	500 bar (7200 psi)	
CE000687	CEBN-310-NCFK-01-S16-N500	Knob style override	500 bar (7200 psi)	

Revision F1

SOLENOID OPERATED CARTRIDGE

CEBE-040-NCFN-05

PILOT OPERATED
POPPET TYPE

ATLANTIC Fluid Tech
WWW.SUMY.IR

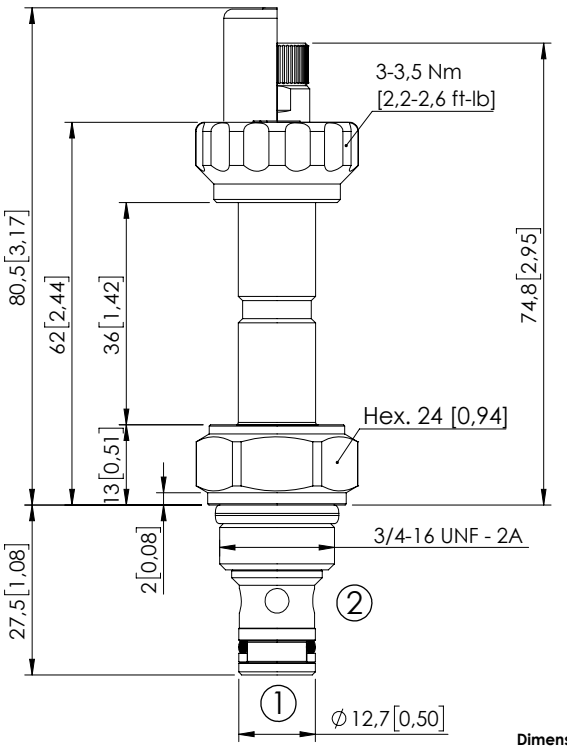

Dimensions: mm [inches]

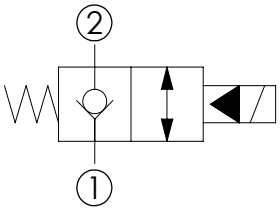

SPECIFICATIONS

Max. operating pressure:	350 bar (5000 psi)
Rated flow:	40 l/min (11 gpm)
Cavity:	SAE-08-2N
Weight:	0,13 kg (0,29 lbs)
Min. voltage required:	90% of nominal
Coil type:	M7 or M3 type
Ambient temperature:	-20/+50 °C (-4/+122 °F)
Contamination class to ISO 4406:	See technical spec.
Seal kit:	RA900081
Installation torque:	45 - 50 Nm (33,2 - 36,9 ft-lb)
MTTFd:	150 - 1200 years: See technical spec.

NOTES

For other configurations/quick codes not available in this catalogue page please consult factory

PATENT PENDING

OPTIONS

Standard

Knob style override

SEALING CAP

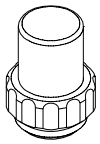

Ordering code:
AT000113

CURVES

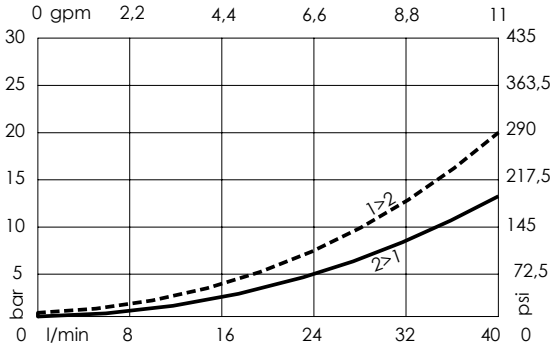

ORDERING CODES

Quick code	Description	Options	Max operating pressure	
CE001148	CEBE-040-NCFN-05-S08-N350	Standard	350 bar (5000 psi)	
CE001149	CEBE-040-NCFK-05-S08-N350	Knob style override	350 bar (5000 psi)	

Revision C

SOLENOID OPERATED CARTRIDGE

CEBN-060-NCFN-05

PILOT OPERATED POPPET TYPE

ATLANTIC Fluid Tech
WWW.SUMY.IR

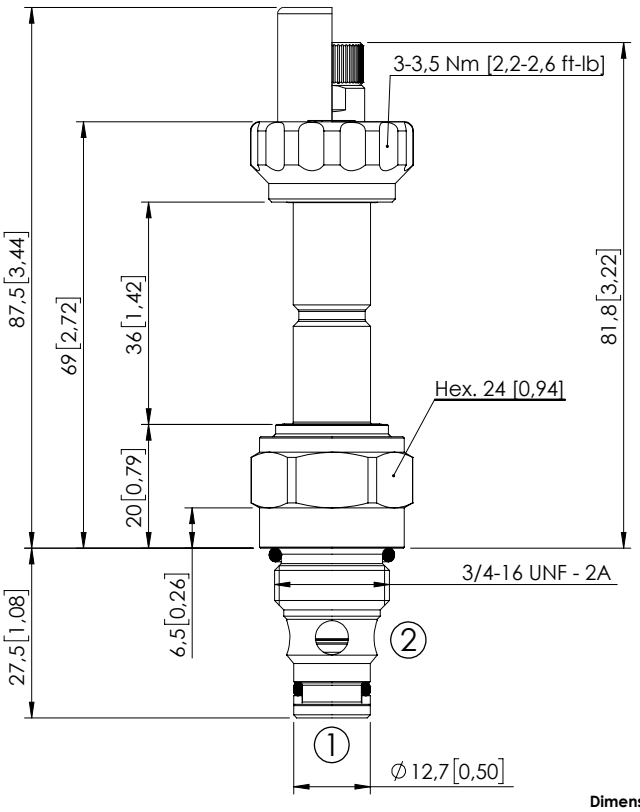

Dimensions: mm [inches]

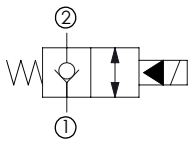

With extra spring

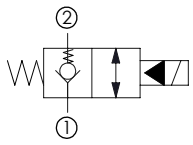

SPECIFICATIONS

Max. operating pressure:	350/500 bar (5000/7200 psi)
Rated flow:	60 l/min (16 gpm)
Cavity:	SAE-08-2N
Weight:	0,15 kg (0,33 lbs)
Min. voltage required:	90% of nominal
Coil type:	M7 or M3 type
Ambient temperature:	-20/+50 °C (-4/+122 °F)
Contamination class to ISO 4406:	See technical spec.
Seal kit:	RA900081
Installation torque:	45 - 50 Nm (33 - 37 ft-lb)
MTTFd:	150 - 1200 years: See technical spec.

NOTES

For other configurations/quick codes not available in this catalogue page please consult factory

PATENT PENDING

OPTIONS

Standard

Knob style override

SEALING CAP

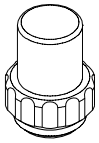

Ordering code:
AT000113

CURVES

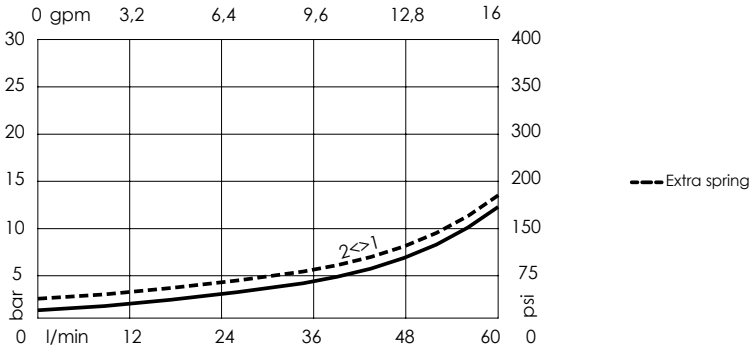

ORDERING CODES

Quick code	Description	Options	Max operating pressure	Extra Spring
CE000218	CEBN-060-NCFN-05-S08-N350	Standard	350 bar (5000 psi)	No
CE000220	CEBN-060-NCFK-05-S08-N350	Knob style override	350 bar (5000 psi)	No
CE000219	CEBN-060-XCFN-05-S08-N350	Standard	350 bar (5000 psi)	Yes
CE000221	CEBN-060-XCFK-05-S08-N350	Knob style override	350 bar (5000 psi)	Yes
CE000518	CEBN-060-NCFN-05-S08-N500	Standard	500 bar (7200 psi)	No
CE000520	CEBN-060-NCFK-05-S08-N500	Knob style override	500 bar (7200 psi)	No

Revision H2

SOLENOID OPERATED CARTRIDGE

CEBN-080-NCFN-05

PILOT OPERATED POPPET TYPE

ATLANTIC Fluid Tech
WWW.SUMY.IR

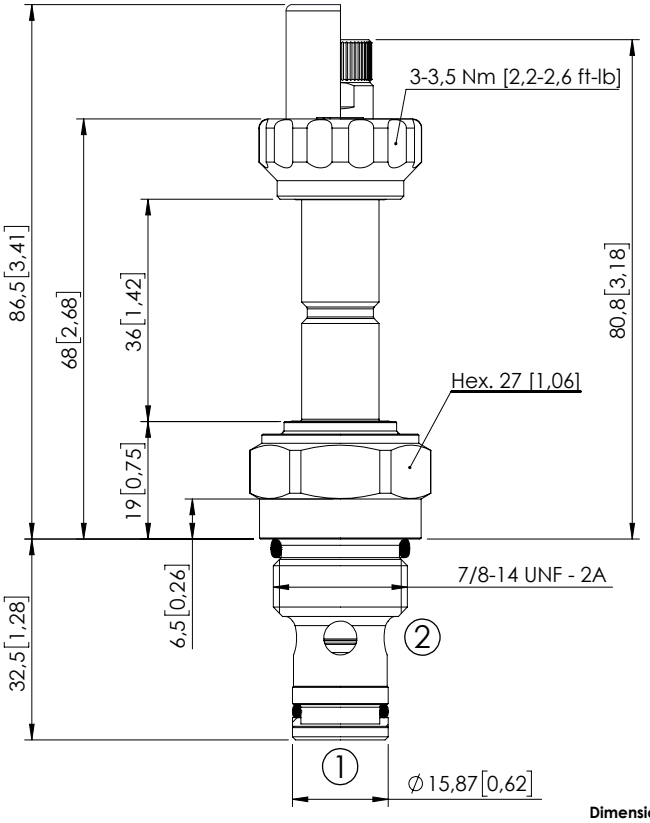

Dimensions: mm [inches]

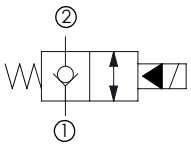

With extra spring

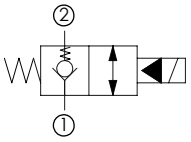

SPECIFICATIONS

Max. operating pressure:	350/500 bar (5000/7200 psi)
Rated flow:	80 l/min (21 gpm)
Cavity:	SAE-10-2N
Weight:	0,18 kg (0,40 lbs)
Min. voltage required:	90% of nominal
Coil type:	M7 or M3 type
Ambient temperature:	-20/+50 °C (-4/+122 °F)
Contamination class to ISO 4406:	See technical spec.
Seal kit:	RA900082
Installation torque:	55 - 62 Nm (41 - 46 ft-lb)
MTTFd:	150 - 1200 years: See technical spec.

NOTES

For other configurations/quick codes not available in this catalogue page please consult factory

PATENT PENDING

OPTIONS

Standard

Knob style override

SEALING CAP

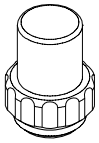

Ordering code:
AT000113

CURVES

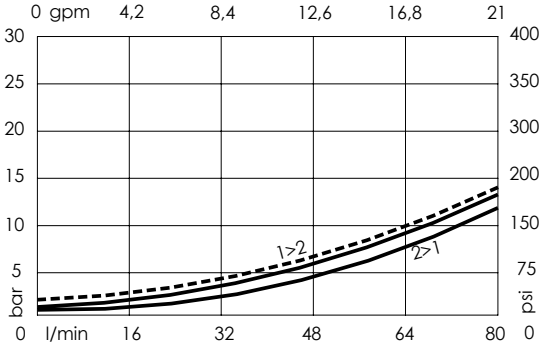

--- Extra spring

ORDERING CODES

Quick code	Description	Options	Max operating pressure	Extra Spring
CE000253	CEBN-080-NCFN-05-S10-N350	Standard	350 bar (5000 psi)	No
CE000255	CEBN-080-NCFK-05-S10-N350	Knob style override	350 bar (5000 psi)	No
CE000254	CEBN-080-XCFN-05-S10-N350	Standard	350 bar (5000 psi)	Yes
CE000256	CEBN-080-XCFK-05-S10-N350	Knob style override	350 bar (5000 psi)	Yes
CE000553	CEBN-080-NCFN-05-S10-N500	Standard	500 bar (7200 psi)	No
CE000555	CEBN-080-NCFK-05-S10-N500	Knob style override	500 bar (7200 psi)	No

Revision D1

SOLENOID OPERATED CARTRIDGE

CEBN-190-NCFN-05

PILOT OPERATED POPPET TYPE

ATLANTIC Fluid Tech
WWW.SUMY.IR

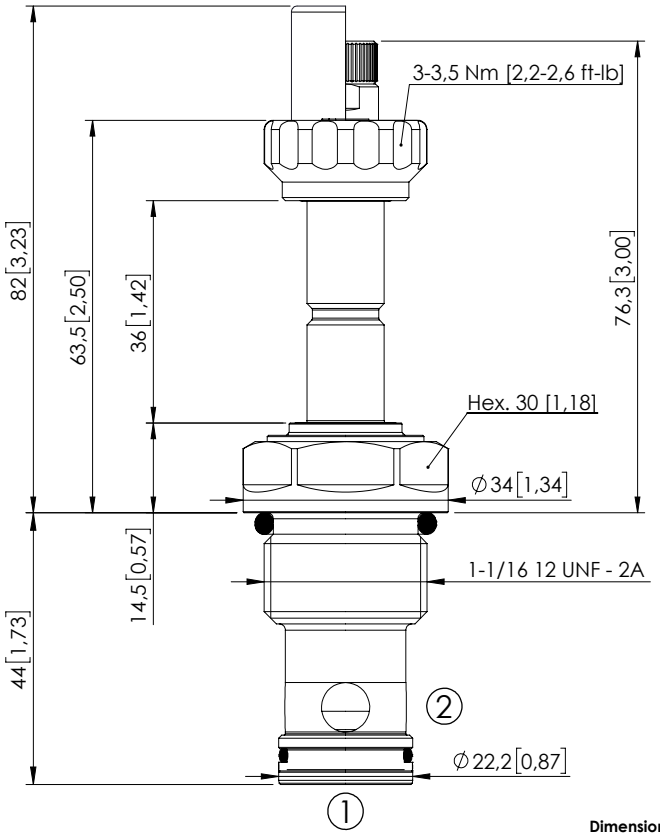

Dimensions: mm [inches]

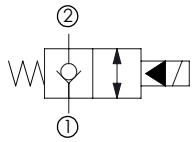

With extra spring

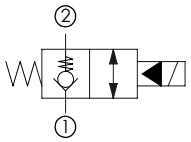

SPECIFICATIONS

Max. operating pressure:	350/500 bar (5000/7200 psi)
Rated flow:	190 l/min (50 gpm)
Cavity:	SAE-12-2N
Weight:	0,25 kg (0,55 lbs)
Min. voltage required:	90% of nominal
Coil type:	M7 or M3 type
Ambient temperature:	-20/+50 °C (-4/+122 °F)
Contamination class to ISO 4406:	See technical spec.
Seal kit:	RA900083
Installation torque:	135 - 150 Nm (100 - 111 ft-lb)
MTTFd:	150 - 1200 years: See technical spec.

NOTES

For other configurations/quick codes not available in this catalogue page please consult factory

PATENT PENDING

OPTIONS

Standard

Knob style override

SEALING CAP

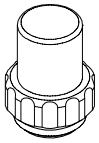

Ordering code:
AT000113

CURVES

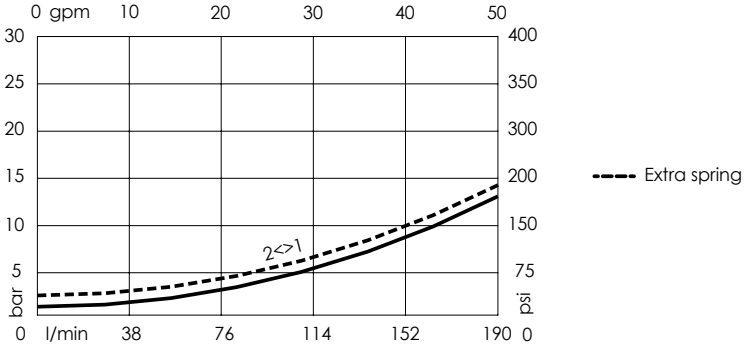

ORDERING CODES

Quick code	Description	Options	Max operating pressure	Extra Spring
CE000323	CEBN-190-NCFN-05-S12-N350	Standard	350 bar (5000 psi)	No
CE000325	CEBN-190-NCFK-05-S12-N350	Knob style override	350 bar (5000 psi)	No
CE000324	CEBN-190-XCFN-05-S12-N350	Standard	350 bar (5000 psi)	Yes
CE000326	CEBN-190-XCFK-05-S12-N350	Knob style override	350 bar (5000 psi)	Yes
CE000623	CEBN-190-NCFN-05-S12-N500	Standard	500 bar (7200 psi)	No
CE000625	CEBN-190-NCFK-05-S12-N500	Knob style override	500 bar (7200 psi)	No

Revision I1

SOLENOID OPERATED CARTRIDGE

CEBN-310-NCFN-05

PILOT OPERATED POPPET TYPE

ATLANTIC Fluid Tech
WWW.SUMY.IR

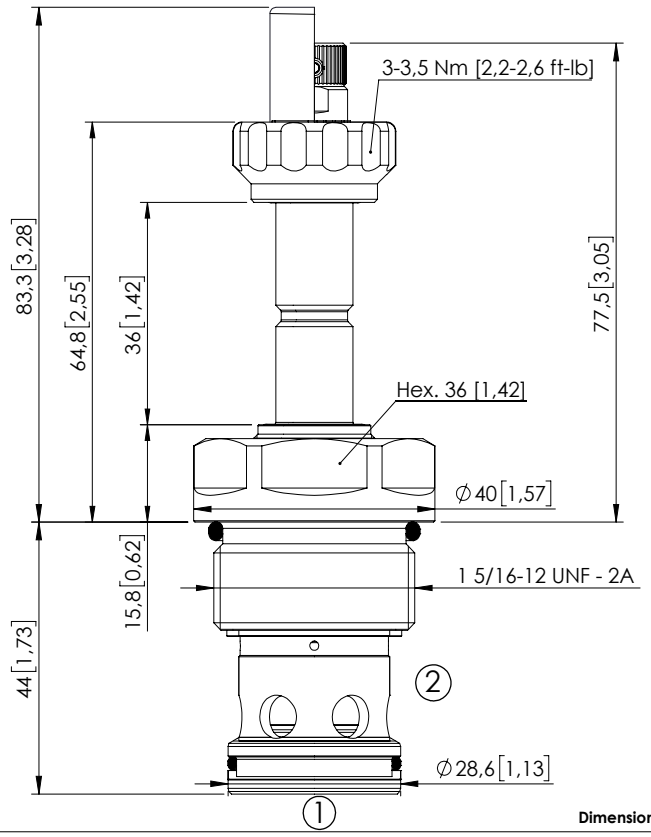

Dimensions: mm [inches]

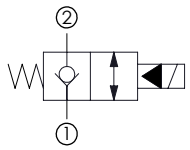

With extra spring

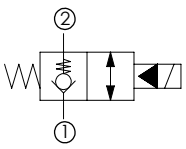

SPECIFICATIONS

Max. operating pressure:	350/500 bar (5000/7200 psi)
Rated flow:	310 l/min (82 gpm)
Cavity:	SAE-16-2N
Weight:	0,36 kg (0,79 lbs)
Min. voltage required:	90% of nominal
Coil type:	M7 or M3 type
Ambient temperature:	-20/+50 °C (-4/+122 °F)
Contamination class to ISO 4406:	See technical spec.
Seal kit:	RA900084
Installation torque:	200 - 210 Nm (148- 155 ft-lb)
MTTFd:	150 - 1200 years: See technical spec.

NOTES

For other configurations/quick codes not available in this catalogue page please consult factory

PATENT PENDING

OPTIONS

Standard

Knob style override

SEALING CAP

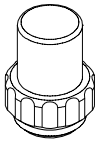

Ordering code:
AT000113

CURVES

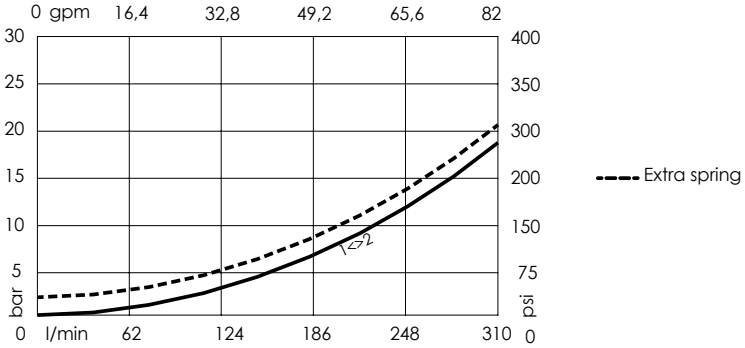

ORDERING CODES

Quick code	Description	Options	Max operating pressure	Extra Spring
CE000393	CEBN-310-NCFN-05-S16-N350	Standard	350 bar (5000 psi)	No
CE000395	CEBN-310-NCFK-05-S16-N350	Knob style override	350 bar (5000 psi)	No
CE000394	CEBN-310-XCFN-05-S16-N350	Standard	350 bar (5000 psi)	Yes
CE000396	CEBN-310-XCFK-05-S16-N350	Knob style override	350 bar (5000 psi)	Yes
CE000693	CEBN-310-NCFN-05-S16-N500	Standard	500 bar (7200 psi)	No
CE000695	CEBN-310-NCFK-05-S16-N500	Knob style override	500 bar (7200 psi)	No
CE000694	CEBN-310-XCFN-05-S16-N500	Standard	500 bar (7200 psi)	Yes

Revision F1

SOLENOID OPERATED CARTRIDGE

CEBN-060-NCFN-03

PILOT OPERATED POPPET TYPE

ATLANTIC Fluid Tech
WWW.SUMY.IR

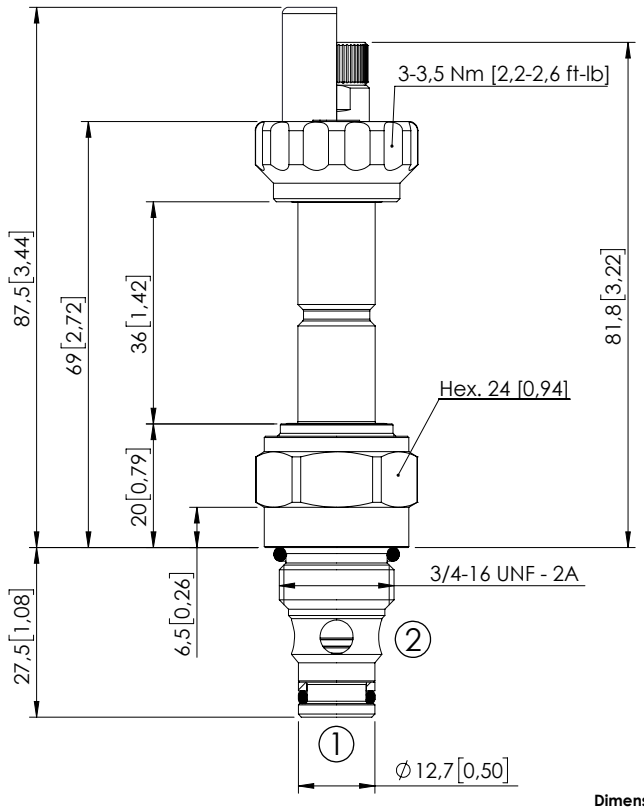

Dimensions: mm [inches]

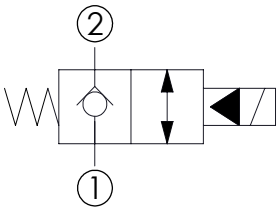

SPECIFICATIONS

Max. operating pressure:	350/500 bar (5000/7200 psi)
Rated flow:	60 l/min (16 gpm)
Cavity:	SAE-08-2N
Weight:	0,15 kg (0,33 lbs)
Min. voltage required:	90% of nominal
Coil type:	M7 or M3 type
Ambient temperature:	-20/+50 °C (-4/+122 °F)
Contamination class to ISO 4406:	See technical spec.
Seal kit:	RA900081
Installation torque:	45 - 50 Nm (33 - 37 ft-lb)
MTTFd:	150 - 1200 years: See technical spec.

NOTES

For other configurations/quick codes not available in this catalogue page please consult factory

PATENT PENDING

OPTIONS

Standard

Knob style override

SEALING CAP

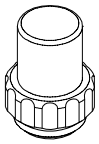

Ordering code:
AT000113

CURVES

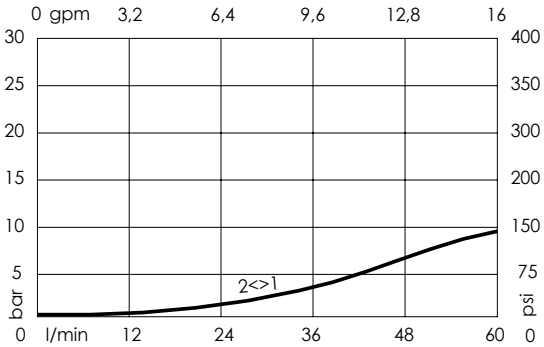

ORDERING CODES

Quick code	Description	Options	Max operating pressure	
CE000214	CEBN-060-NCFN-03-S08-N350	Standard	350 bar (5000 psi)	
CE000216	CEBN-060-NCFK-03-S08-N350	Knob style override	350 bar (5000 psi)	
CE000514	CEBN-060-NCFN-03-S08-N500	Standard	500 bar (7200 psi)	
CE000516	CEBN-060-NCFK-03-S08-N500	Knob style override	500 bar (7200 psi)	

Revision G1

SOLENOID OPERATED CARTRIDGE

CEBN-080-NCFN-03

PILOT OPERATED POPPET TYPE

ATLANTIC Fluid Tech
WWW.SUMY.IR

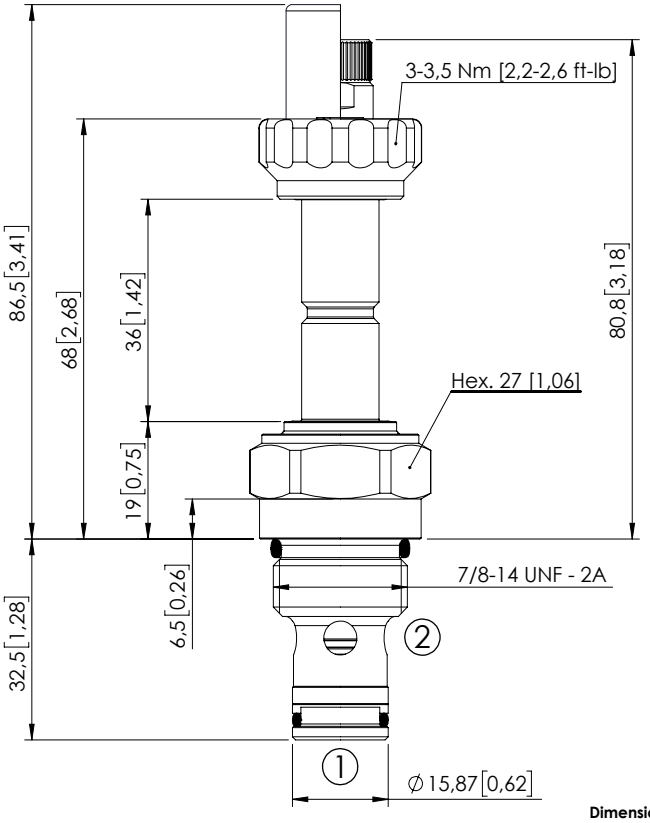

Dimensions: mm [inches]

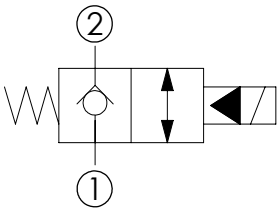

SPECIFICATIONS

Max. operating pressure:	350/500 bar (5000/7200 psi)
Rated flow:	80 l/min (21 gpm)
Cavity:	SAE-10-2N
Weight:	0,18 kg (0,40 lbs)
Min. voltage required:	90% of nominal
Coil type:	M7 or M3 type
Ambient temperature:	-20/+50 °C (-4/+122 °F)
Contamination class to ISO 4406:	See technical spec.
Seal kit:	RA900082
Installation torque:	55 - 62 Nm (41 - 46 ft-lb)
MTTFd:	150 - 1200 years: See technical spec.

NOTES

For other configurations/quick codes not available in this catalogue page please consult factory

PATENT PENDING

OPTIONS

Standard

Knob style override

SEALING CAP

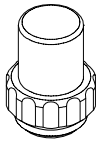

Ordering code:
AT000113

CURVES

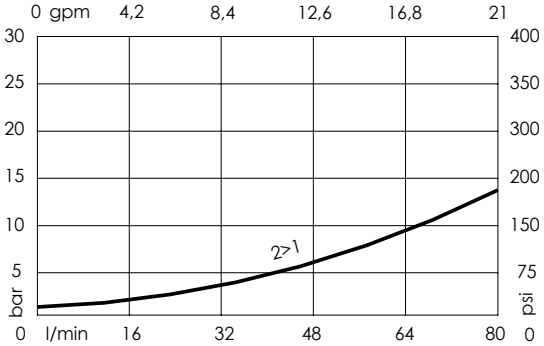

ORDERING CODES

Quick code	Description	Options	Max operating pressure	
CE000249	CEBN-080-NCFN-03-S10-N350	Standard	350 bar (5000 psi)	
CE000251	CEBN-080-NCFK-03-S10-N350	Knob style override	350 bar (5000 psi)	
CE000549	CEBN-080-NCFN-03-S10-N500	Standard	500 bar (7200 psi)	
CE000551	CEBN-080-NCFK-03-S10-N500	Knob style override	500 bar (7200 psi)	

Revision D1

SOLENOID OPERATED CARTRIDGE

CEBN-310-NCFN-03

PILOT OPERATED POPPET TYPE

ATLANTIC Fluid Tech
WWW.SUMY.IR

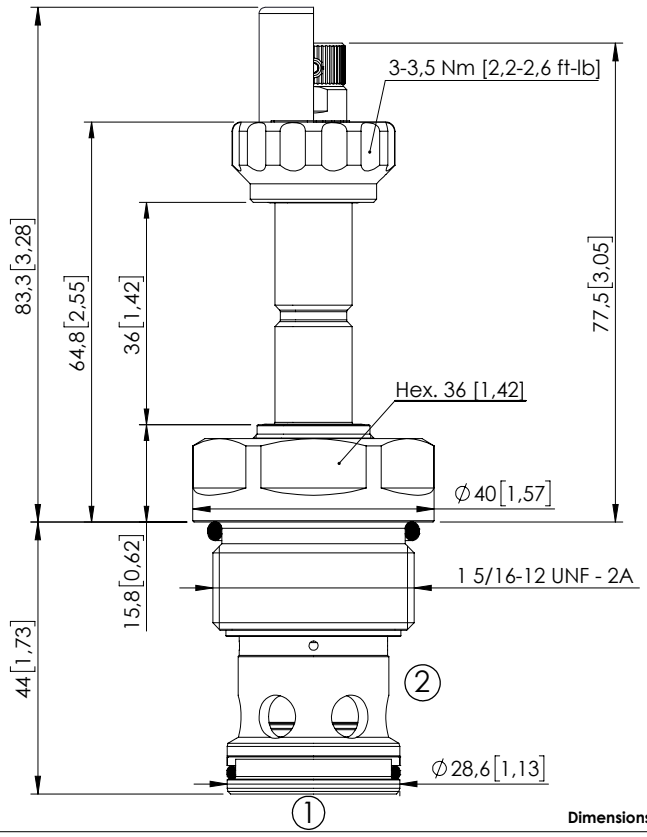

Dimensions: mm [inches]

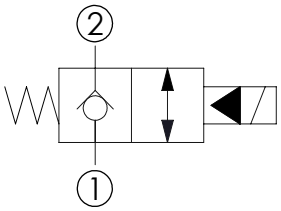

SPECIFICATIONS

Max. operating pressure:	350/500 bar (5000/7200 psi)
Rated flow:	310 l/min (82 gpm)
Cavity:	SAE-16-2N
Weight:	0,36 kg (0,79 lbs)
Min. voltage required:	90% of nominal
Coil type:	M7 or M3 type
Ambient temperature:	-20/+50 °C (-4/+122 °F)
Contamination class to ISO 4406:	See technical spec.
Seal kit:	RA900084
Installation torque:	200 - 210 Nm (148 - 155 ft-lb)
MTTFd:	150 - 1200 years: See technical spec.

NOTES

For other configurations/quick codes not available in this catalogue page please consult factory

PATENT PENDING

OPTIONS

Standard

Knob style override

SEALING CAP

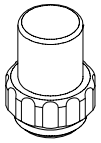

Ordering code:
AT000113

CURVES

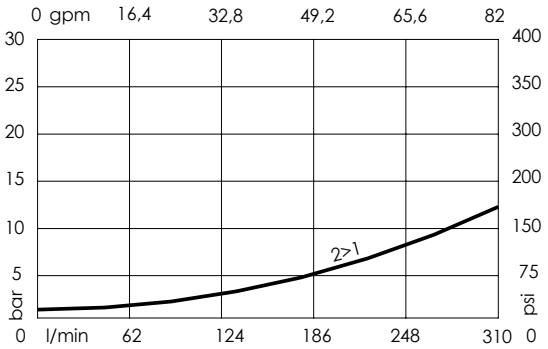

ORDERING CODES

Quick code	Description	Options	Max operating pressure	
CE000389	CEBN-310-NCFN-03-S16-N350	Standard	350 bar (5000 psi)	
CE000391	CEBN-310-NCFK-03-S16-N350	Knob style override	350 bar (5000 psi)	
CE000689	CEBN-310-NCFN-03-S16-N500	Standard	500 bar (7200 psi)	
CE000691	CEBN-310-NCFK-03-S16-N500	Knob style override	500 bar (7200 psi)	

Revision E

SOLENOID OPERATED CARTRIDGE

CEBN-060-NAFN-02

PILOT OPERATED POPPET TYPE

ATLANTIC Fluid Tech
WWW.SUMY.IR

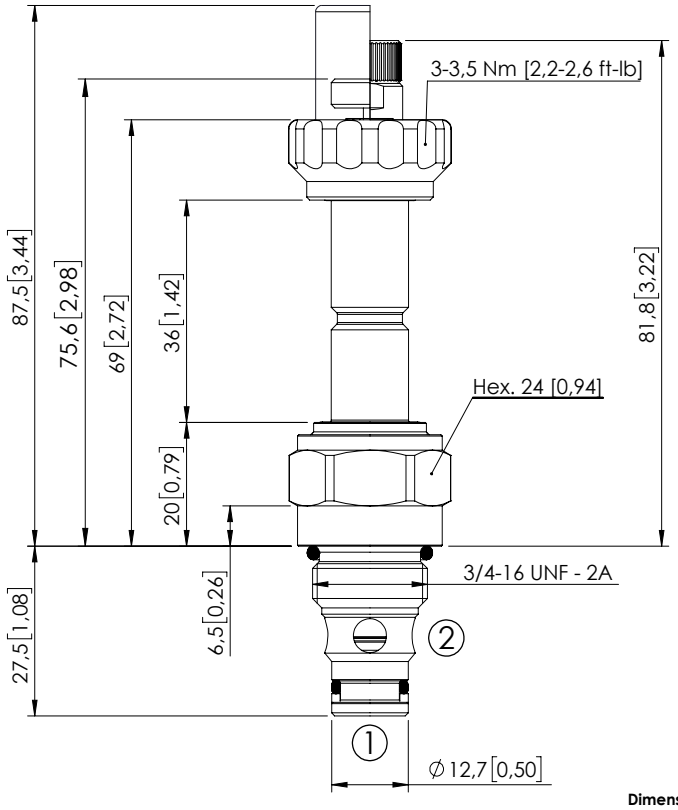

Dimensions: mm [inches]

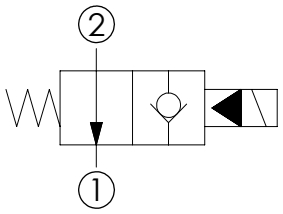

SPECIFICATIONS

Max. operating pressure:	350/500 bar (5000/7200 psi)
Rated flow:	60 l/min (16 gpm)
Cavity:	SAE-08-2N
Weight:	0,15 kg (0,33 lbs)
Min. voltage required:	90% of nominal
Coil type:	M7 or M3 type
Ambient temperature:	-20/+50 °C (-4/+122 °F)
Contamination class to ISO 4406:	See technical spec.
Seal kit:	RA900081
Installation torque:	45 - 50 Nm (33 - 37 ft-lb)
MTTFd:	150 - 1200 years: See technical spec.

NOTES

For other configurations/quick codes not available in this catalogue page please consult factory

PATENT PENDING

OPTIONS

Standard

Push style override

Knob style override

SEALING CAP

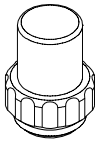

Ordering code:
AT000113

CURVES

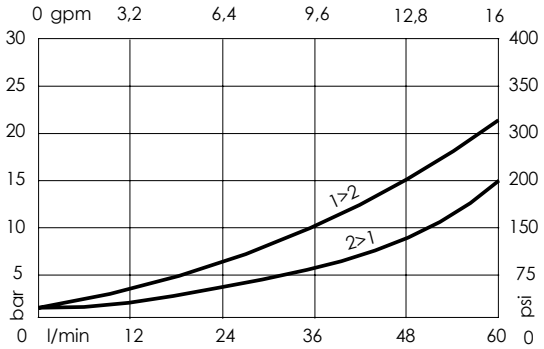

ORDERING CODES

Quick code	Description	Options	Max operating pressure	
CE000230	CEBN-060-NAFN-02-S08-N350	Standard	350 bar (5000 psi)	
CE000231	CEBN-060-NAFP-02-S08-N350	Push style override	350 bar (5000 psi)	
CE000232	CEBN-060-NAFK-02-S08-N350	Knob style override	350 bar (5000 psi)	
CE000530	CEBN-060-NAFN-02-S08-N500	Standard	500 bar (7200 psi)	
CE000531	CEBN-060-NAFP-02-S08-N500	Push style override	500 bar (7200 psi)	
CE000532	CEBN-060-NAFK-02-S08-N500	Knob style override	500 bar (7200 psi)	

Revision G1

SOLENOID OPERATED CARTRIDGE

CEBN-080-NAFN-02

PILOT OPERATED POPPET TYPE

ATLANTIC Fluid Tech
WWW.SUMY.IR

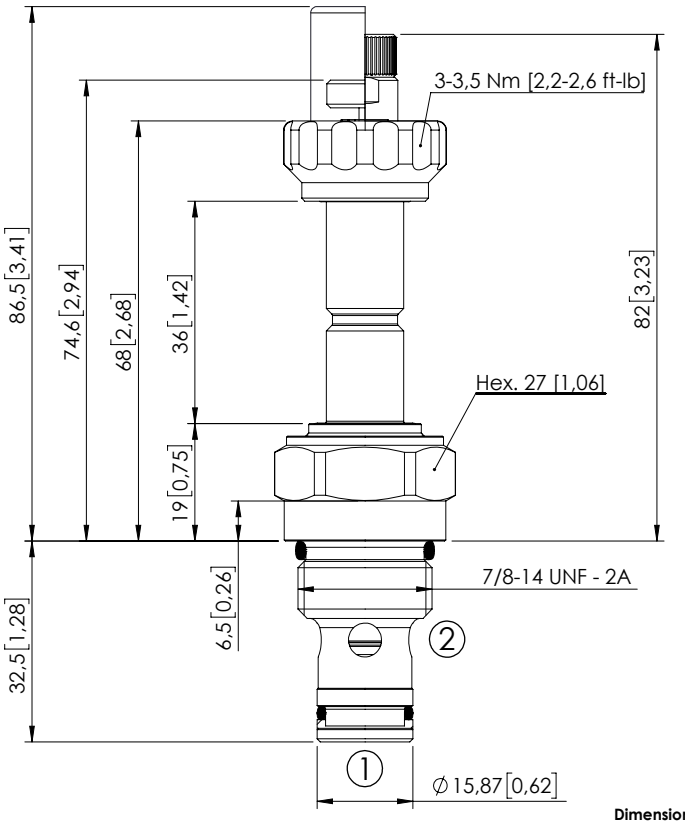

Dimensions: mm [inches]

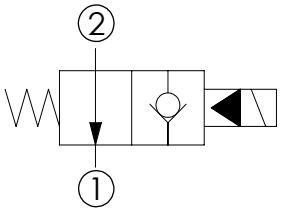

SPECIFICATIONS

Max. operating pressure:	350/500 bar (5000/7200 psi)
Rated flow:	80 l/min (21 gpm)
Cavity:	SAE-10-2N
Weight:	0,18 kg (0,40 lbs)
Min. voltage required:	90% of nominal
Coil type:	M7 or M3 type
Ambient temperature:	-20/+50 °C (-4/+122 °F)
Contamination class to ISO 4406:	See technical spec.
Seal kit:	RA900082
Installation torque:	55 - 62 Nm (41 - 46 ft-lb)
MTTFd:	150 - 1200 years: See technical spec.

NOTES

For other configurations/quick codes not available in this catalogue page please consult factory

PATENT PENDING

OPTIONS

Standard

Push style override

Knob style override

SEALING CAP

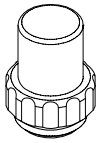

Ordering code:
AT000113

CURVES

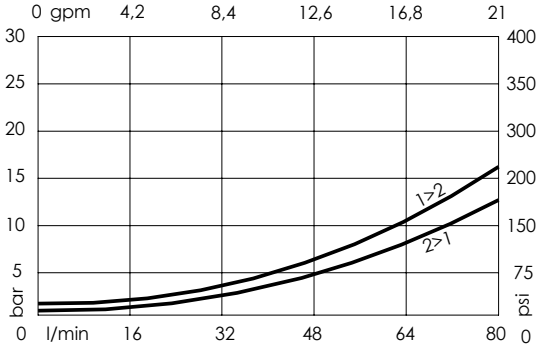

ORDERING CODES

Quick code	Description	Options	Max operating pressure	
CE000265	CEBN-080-NAFN-02-S10-N350	Standard	350 bar (5000 psi)	
CE000266	CEBN-080-NAFP-02-S10-N350	Push style override	350 bar (5000 psi)	
CE000267	CEBN-080-NAFK-02-S10-N350	Knob style override	350 bar (5000 psi)	
CE000565	CEBN-080-NAFN-02-S10-N500	Standard	500 bar (7200 psi)	
CE000566	CEBN-080-NAFP-02-S10-N500	Push style override	500 bar (7200 psi)	
CE000567	CEBN-080-NAFK-02-S10-N500	Knob style override	500 bar (7200 psi)	

Revision F1

SOLENOID OPERATED CARTRIDGE

CEBN-190-NAFN-02

PILOT OPERATED POPPET TYPE

ATLANTIC Fluid Tech
WWW.SUMY.IR

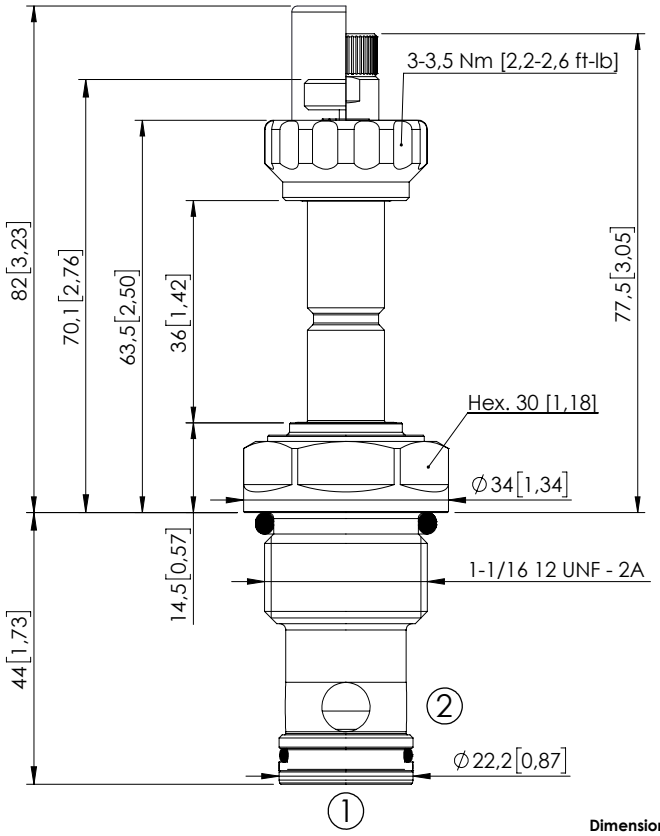

Dimensions: mm [inches]

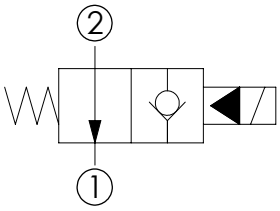

SPECIFICATIONS

Max. operating pressure:	350/500 bar (5000/7200 psi)
Rated flow:	190 l/min (50 gpm)
Cavity:	SAE-12-2N
Weight:	0,25 kg (0,55 lbs)
Min. voltage required:	90% of nominal
Coil type:	M7 or M3 type
Ambient temperature:	-20/+50 °C (-4/+122 °F)
Contamination class to ISO 4406:	See technical spec.
Seal kit:	RA900083
Installation torque:	135 - 150 Nm (100 - 111 ft-lb)
MTTFd:	150 - 1200 years: See technical spec.

NOTES

For other configurations/quick codes not available in this catalogue page please consult factory

PATENT PENDING

OPTIONS

Standard

Push style override

Knob style override

SEALING CAP

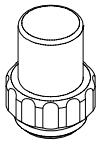

Ordering code:
AT000113

CURVES

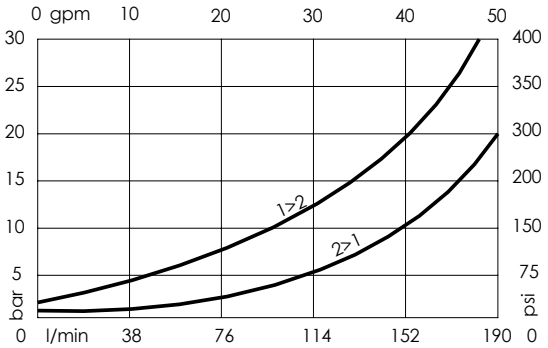

ORDERING CODES

Quick code	Description	Options	Max operating pressure	
CE000335	CEBN-190-NAFN-02-S12-N350	Standard	350 bar (5000 psi)	
CE000336	CEBN-190-NAFP-02-S12-N350	Push style override	350 bar (5000 psi)	
CE000337	CEBN-190-NAFK-02-S12-N350	Knob style override	350 bar (5000 psi)	
CE000635	CEBN-190-NAFN-02-S12-N500	Standard	500 bar (7200 psi)	
CE000636	CEBN-190-NAFP-02-S12-N500	Push style override	500 bar (7200 psi)	
CE000637	CEBN-190-NAFK-02-S12-N500	Knob style override	500 bar (7200 psi)	

Revision F1

SOLENOID OPERATED CARTRIDGE

CEBN-310-NAFN-02

PILOT OPERATED POPPET TYPE

ATLANTIC Fluid Tech
WWW.SUMY.IR

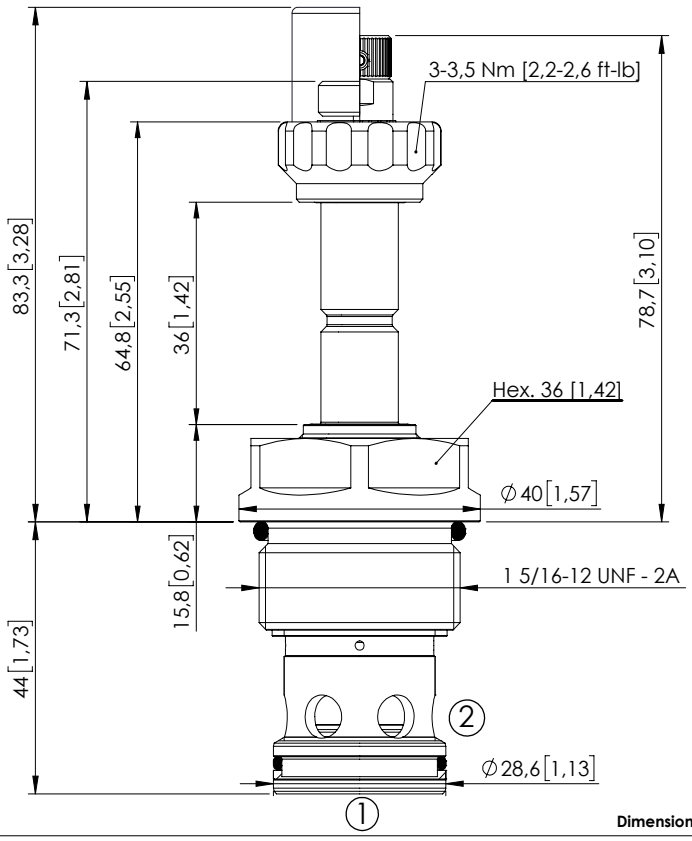

Dimensions: mm [inches]

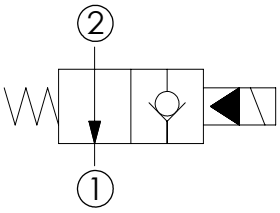

SPECIFICATIONS

Max. operating pressure:	350/500 bar (5000/7200 psi)
Rated flow:	310 l/min (82 gpm)
Cavity:	SAE-16-2N
Weight:	0,36 kg (0,79 lbs)
Min. voltage required:	90% of nominal
Coil type:	M7 or M3 type
Ambient temperature:	-20/+50 °C (-4/+122 °F)
Contamination class to ISO 4406:	See technical spec.
Seal kit:	RA900084
Installation torque:	200 - 210 Nm (148 - 155 ft-lb)
MTTFd:	150 - 1200 years: See technical spec.

NOTES

For other configurations/quick codes not available in this catalogue page please consult factory

PATENT PENDING

OPTIONS

Standard

Push style override

Knob style override

SEALING CAP

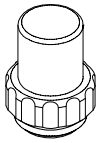

Ordering code:
AT000113

CURVES

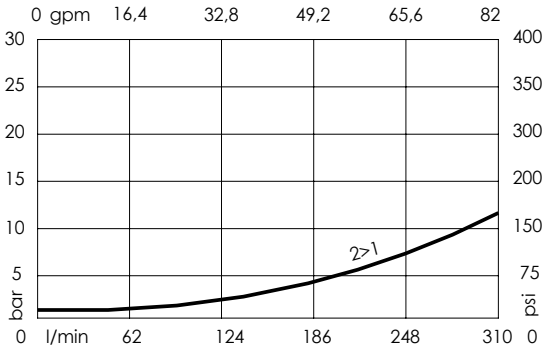

ORDERING CODES

Quick code	Description	Options	Max operating pressure	
CE000405	CEBN-310-NAFN-02-S16-N350	Standard	350 bar (5000 psi)	
CE000406	CEBN-310-NAFP-02-S16-N350	Push style override	350 bar (5000 psi)	
CE000407	CEBN-310-NAFK-02-S16-N350	Knob style override	350 bar (5000 psi)	
CE000705	CEBN-310-NAFN-02-S16-N500	Standard	500 bar (7200 psi)	
CE000706	CEBN-310-NAFP-02-S16-N500	Push style override	500 bar (7200 psi)	
CE000707	CEBN-310-NAFK-02-S16-N500	Knob style override	500 bar (7200 psi)	

Revision F1

SOLENOID OPERATED CARTRIDGE

CEBE-040-NAFN-06

PILOT OPERATED
POPPET TYPE

ATLANTIC Fluid Tech
WWW.SUMY.IR

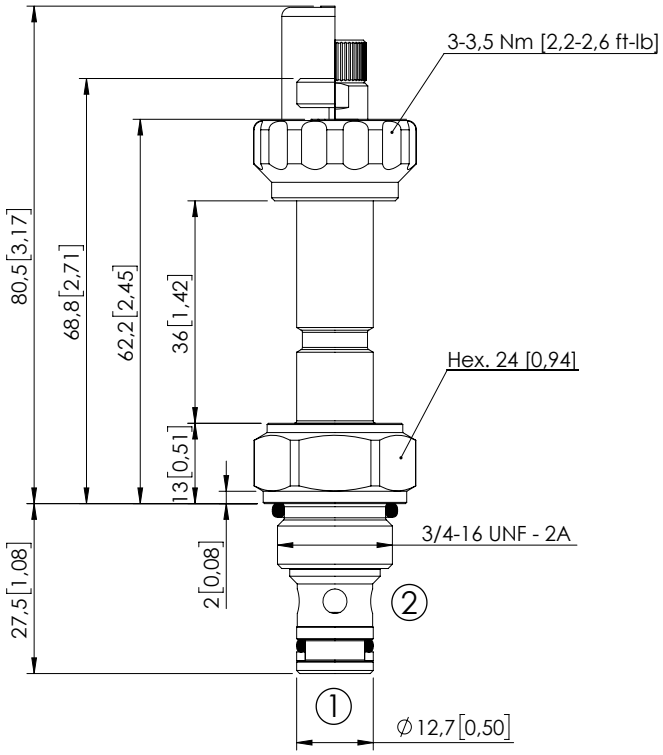

Dimensions: mm [inches]

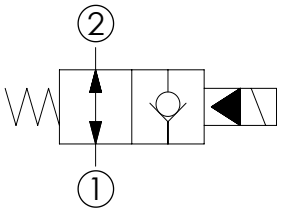

SPECIFICATIONS

Max. operating pressure:	350 bar (5000 psi)
Rated flow:	40 l/min (11 gpm)
Cavity:	SAE-08-2N
Weight:	0,13 kg (0,29 lbs)
Min. voltage required:	90% of nominal
Coil type:	M7 or M3 type
Ambient temperature:	-20/+50 °C (-4/+122 °F)
Contamination class to ISO 4406:	See technical spec.
Seal kit:	RA900081
Installation torque:	45 - 50 Nm (33,2 - 36,9 ft-lb)
MTTFd:	150 - 1200 years: See technical spec.

NOTES

For other configurations/quick codes not available in this catalogue page please consult factory

PATENT PENDING

OPTIONS

Standard

Push style override

Knob style override

SEALING CAP

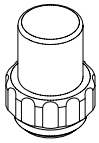

Ordering code:
AT000113

CURVES

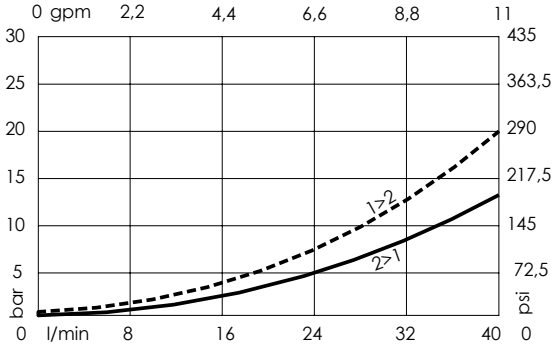

ORDERING CODES

Quick code	Description	Options	Max operating pressure	
CE001155	CEBE-040-NAFN-06-S08-N350	Standard	350 bar (5000 psi)	
CE001156	CEBE-040-NAFP-06-S08-N350	Push style override	350 bar (5000 psi)	
CE001157	CEBE-040-NAFK-06-S08-N350	Knob style override	350 bar (5000 psi)	

Revision G

SOLENOID OPERATED CARTRIDGE

CEBN-060-NAFN-06

PILOT OPERATED POPPET TYPE

ATLANTIC Fluid Tech
WWW.SUMY.IR

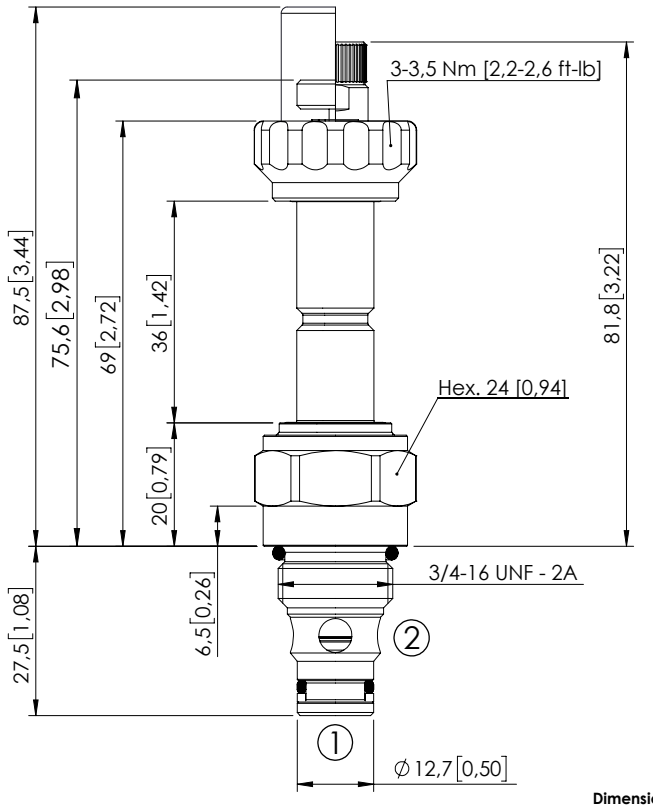

Dimensions: mm [inches]

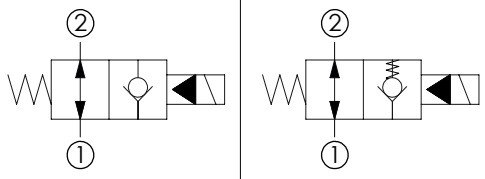

SPECIFICATIONS

Max. operating pressure:	350/500 bar (5000/7200 psi)
Rated flow:	60 l/min (16 gpm)
Cavity:	SAE-08-2N
Weight:	0,15 kg (0,33 lbs)
Min. voltage required:	90% of nominal
Coil type:	M7 or M3 type
Ambient temperature:	-20/+50 °C (-4/+122 °F)
Contamination class to ISO 4406:	See technical spec.
Seal kit:	RA900081
Installation torque:	45 - 50 Nm (33 - 37 ft-lb)
MTTFd:	150 - 1200 years: See technical spec.

NOTES

For other configurations/quick codes not available in this catalogue page please consult factory

PATENT PENDING

OPTIONS

Standard

Push style override

Knob style override

SEALING CAP

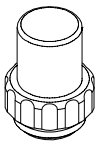

Ordering code:
AT000113

CURVES

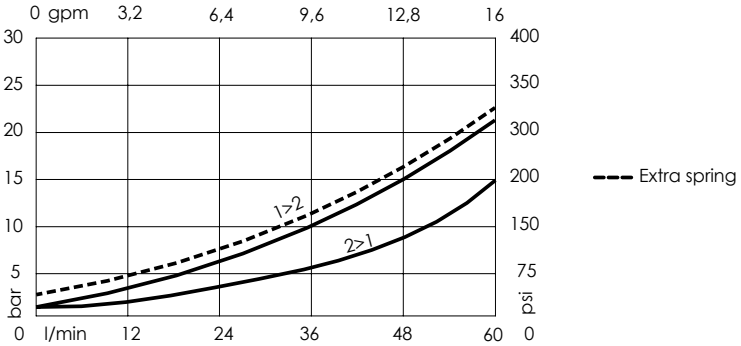

ORDERING CODES

Quick code	Description	Options	Max operating pressure	Extra Spring
CE000236	CEBN-060-NAFN-06-S08-N350	Standard	350 bar (5000 psi)	No
CE000237	CEBN-060-NAFP-06-S08-N350	Push style override	350 bar (5000 psi)	No
CE000238	CEBN-060-NAFK-06-S08-N350	Knob style override	350 bar (5000 psi)	No
CE000483	CEBN-060-XAFN-06-S08-N350	Standard	350 bar (5000 psi)	Yes
CE000536	CEBN-060-NAFN-06-S08-N500	Standard	500 bar (7200 psi)	No
CE000537	CEBN-060-NAFP-06-S08-N500	Push style override	500 bar (7200 psi)	No
CE000538	CEBN-060-NAFK-06-S08-N500	Knob style override	500 bar (7200 psi)	No

Revision G1

SOLENOID OPERATED CARTRIDGE

CEBN-080-NAFN-06

PILOT OPERATED POPPET TYPE

ATLANTIC Fluid Tech
WWW.SUMY.IR

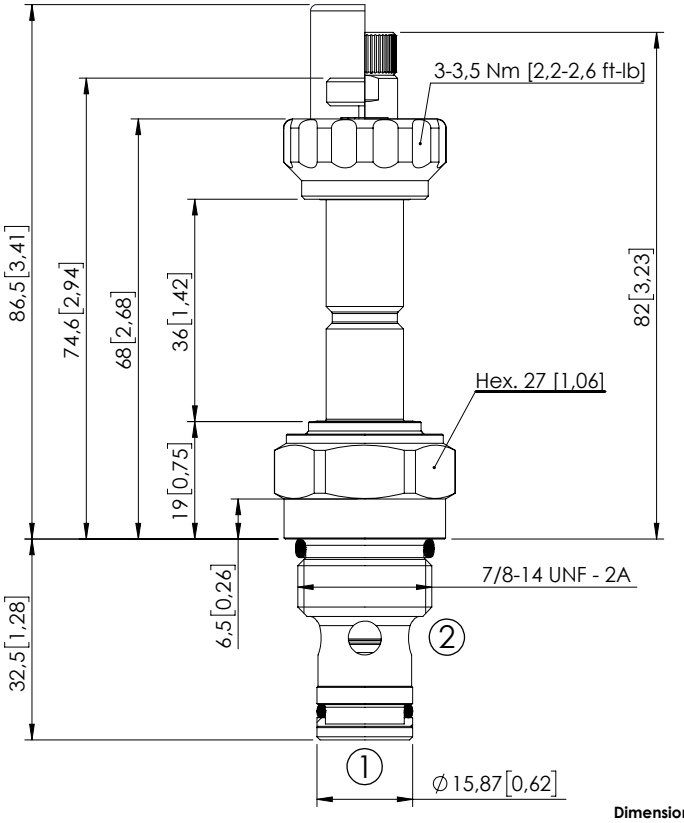

Dimensions: mm [inches]

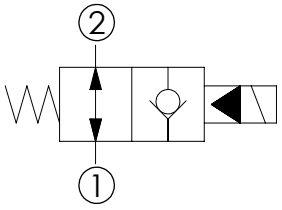

SPECIFICATIONS

Max. operating pressure:	350/500 bar (5000/7200 psi)
Rated flow:	80 l/min (21 gpm)
Cavity:	SAE-10-2N
Weight:	0,18 kg (0,40 lbs)
Min. voltage required:	90% of nominal
Coil type:	M7 or M3 type
Ambient temperature:	-20/+50 °C (-4/+122 °F)
Contamination class to ISO 4406:	See technical spec.
Seal kit:	RA900082
Installation torque:	55 - 62 Nm (41 - 46 ft-lb)
MTTFd:	150 - 1200 years: See technical spec.

NOTES

For other configurations/quick codes not available in this catalogue page please consult factory

PATENT PENDING

OPTIONS

Standard

Push style override

Knob style override

SEALING CAP

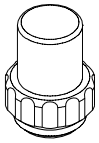

Ordering code:
AT000113

CURVES

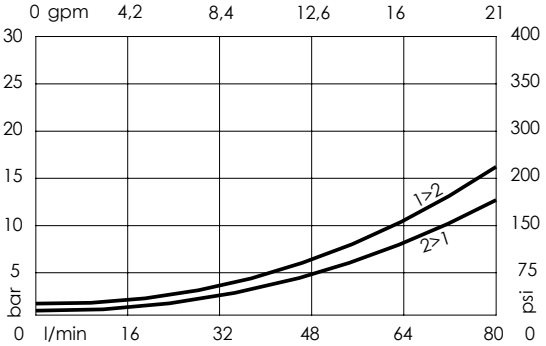

ORDERING CODES

Quick code	Description	Options	Max operating pressure	
CE000271	CEBN-080-NAFN-06-S10-N350	Standard	350 bar (5000 psi)	
CE000272	CEBN-080-NAFP-06-S10-N350	Push style override	350 bar (5000 psi)	
CE000273	CEBN-080-NAFK-06-S10-N350	Knob style override	350 bar (5000 psi)	
CE000571	CEBN-080-NAFN-06-S10-N500	Standard	500 bar (7200 psi)	
CE000572	CEBN-080-NAFP-06-S10-N500	Push style override	500 bar (7200 psi)	
CE000573	CEBN-080-NAFK-06-S10-N500	Knob style override	500 bar (7200 psi)	

Revision F1

SOLENOID OPERATED CARTRIDGE

CEBN-190-NAFN-06

PILOT OPERATED POPPET TYPE

ATLANTIC Fluid Tech
WWW.SUMY.IR

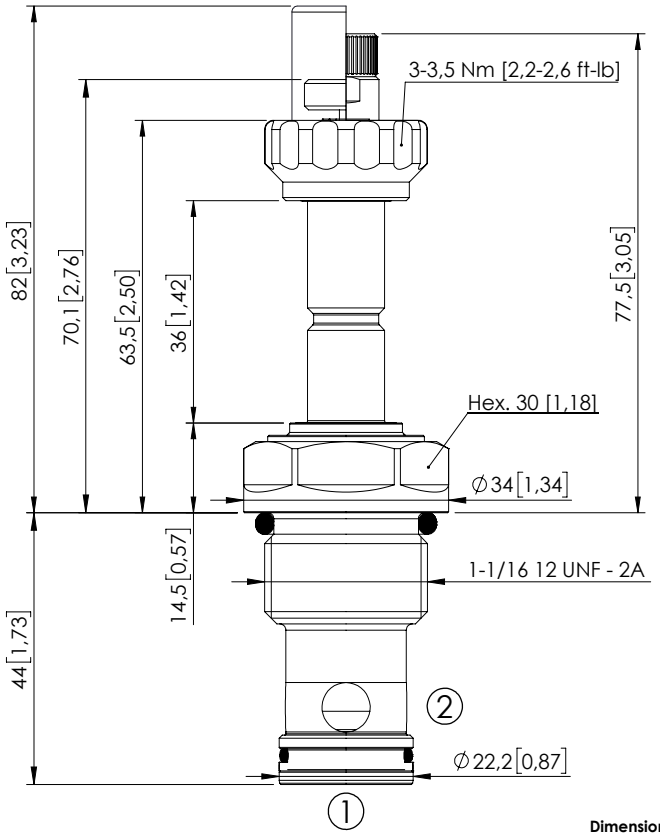

Dimensions: mm [inches]

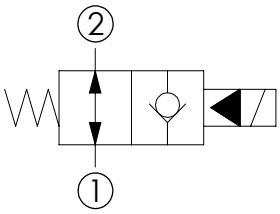

SPECIFICATIONS

Max. operating pressure:	350/500 bar (5000/7200 psi)
Rated flow:	190 l/min (50 gpm)
Cavity:	SAE-12-2N
Weight:	0,25 kg (0,55 lbs)
Min. voltage required:	90% of nominal
Coil type:	M7 or M3 type
Ambient temperature:	-20/+50 °C (-4/+122 °F)
Contamination class to ISO 4406:	See technical spec.
Seal kit:	RA900083
Installation torque:	135 - 150 Nm (100 - 111 ft-lb)
MTTFd:	150 - 1200 years: See technical spec.

NOTES

For other configurations/quick codes not available in this catalogue page please consult factory

PATENT PENDING

OPTIONS

Standard

Push style override

Knob style override

SEALING CAP

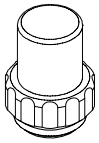

Ordering code:
AT000113

CURVES

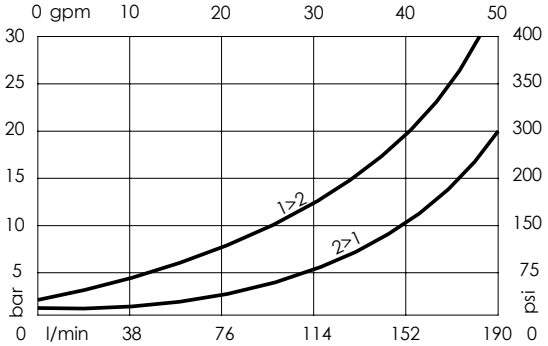

ORDERING CODES

Quick code	Description	Options	Max operating pressure	
CE000341	CEBN-190-NAFN-06-S12-N350	Standard	350 bar (5000 psi)	
CE000342	CEBN-190-NAFP-06-S12-N350	Push style override	350 bar (5000 psi)	
CE000343	CEBN-190-NAFK-06-S12-N350	Knob style override	350 bar (5000 psi)	
CE000641	CEBN-190-NAFN-06-S12-N500	Standard	500 bar (7200 psi)	
CE000642	CEBN-190-NAFP-06-S12-N500	Push style override	500 bar (7200 psi)	
CE000643	CEBN-190-NAFK-06-S12-N500	Knob style override	500 bar (7200 psi)	

Revision H1

SOLENOID OPERATED CARTRIDGE

CEBN-310-NAFN-06

PILOT OPERATED POPPET TYPE

ATLANTIC Fluid Tech
WWW.SUMY.IR

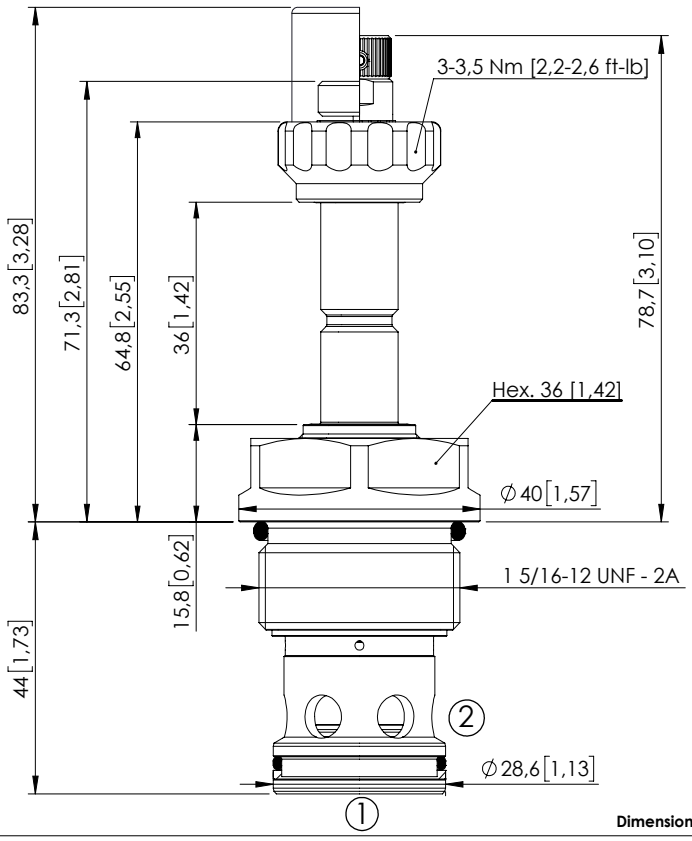

Dimensions: mm [inches]

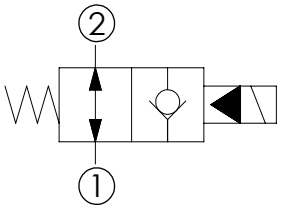

SPECIFICATIONS

Max. operating pressure:	350/500 bar (5000/7200 psi)
Rated flow:	310 l/min (82 gpm)
Cavity:	SAE-16-2N
Weight:	0,36 kg (0,79 lbs)
Min. voltage required:	90% of nominal
Coil type:	M7 or M3 type
Ambient temperature:	-20/+50 °C (-4/+122 °F)
Contamination class to ISO 4406:	See technical spec.
Seal kit:	RA900084
Installation torque:	200 - 210 Nm (148 - 155 ft-lb)
MTTFd:	150 - 1200 years: See technical spec.

NOTES

For other configurations/quick codes not available in this catalogue page please consult factory

PATENT PENDING

OPTIONS

Standard

Push style override

Knob style override

SEALING CAP

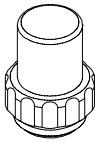

Ordering code:
AT000113

CURVES

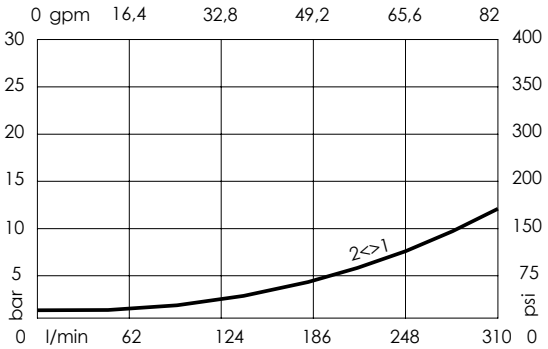

ORDERING CODES

Quick code	Description	Options	Max operating pressure	
CE000411	CEBN-310-NAFN-06-S16-N350	Standard	350 bar (5000 psi)	
CE000412	CEBN-310-NAFP-06-S16-N350	Push style override	350 bar (5000 psi)	
CE000413	CEBN-310-NAFK-06-S16-N350	Knob style override	350 bar (5000 psi)	
CE000711	CEBN-310-NAFN-06-S16-N500	Standard	500 bar (7200 psi)	
CE000712	CEBN-310-NAFP-06-S16-N500	Push style override	500 bar (7200 psi)	
CE000713	CEBN-310-NAFK-06-S16-N500	Knob style override	500 bar (7200 psi)	

Revision F1

SOLENOID OPERATED CARTRIDGE

CEBN-060-NAFN-04

PILOT OPERATED POPPET TYPE

ATLANTIC Fluid Tech
WWW.SUMY.IR

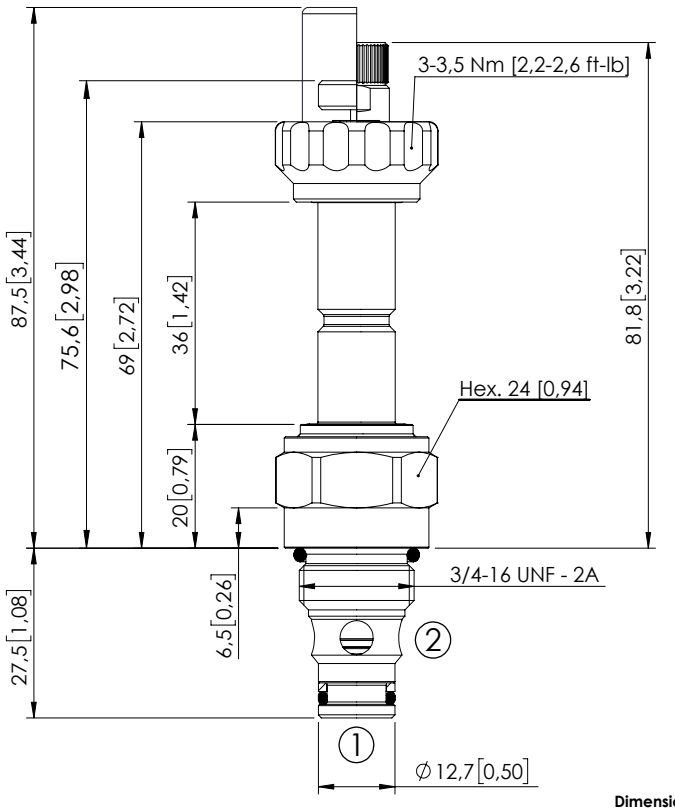

Dimensions: mm [inches]

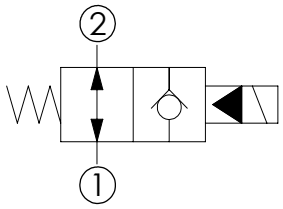

SPECIFICATIONS

Max. operating pressure:	350/500 bar (5000/7200 psi)
Rated flow:	60 l/min (16 gpm)
Cavity:	SAE-08-2N
Weight:	0,15 kg (0,33 lbs)
Min. voltage required:	90% of nominal
Coil type:	M7 or M3 type
Ambient temperature:	-20/+50 °C (-4/+122 °F)
Contamination class to ISO 4406:	See technical spec.
Seal kit:	RA900081
Installation torque:	45 - 50 Nm (33 - 37 ft-lb)
MTTFd:	150 - 1200 years: See technical spec.

NOTES

For other configurations/quick codes not available in this catalogue page please consult factory

PATENT PENDING

OPTIONS

Standard

Push style override

Knob style override

SEALING CAP

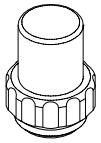

Ordering code:
AT000113

CURVES

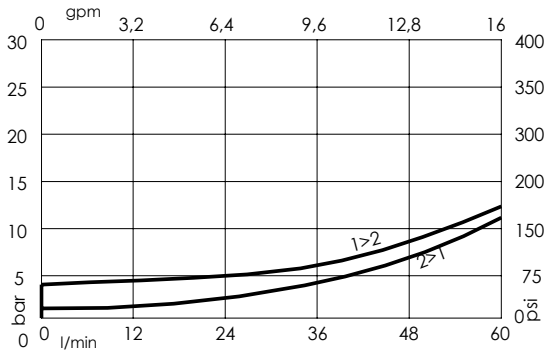

ORDERING CODES

Quick code	Description	Options	Max operating pressure	
CE000233	CEBN-060-NAFN-04-S08-N350	Standard	350 bar (5000 psi)	
CE000234	CEBN-060-NAFP-04-S08-N350	Push style override	350 bar (5000 psi)	
CE000235	CEBN-060-NAFK-04-S08-N350	Knob style override	350 bar (5000 psi)	
CE000533	CEBN-060-NAFN-04-S08-N500	Standard	500 bar (7200 psi)	
CE000534	CEBN-060-NAFP-04-S08-N500	Push style override	500 bar (7200 psi)	
CE000535	CEBN-060-NAFK-04-S08-N500	Knob style override	500 bar (7200 psi)	

Revision G1

SOLENOID OPERATED CARTRIDGE

CEBN-080-NAFN-04

PILOT OPERATED POPPET TYPE

ATLANTIC Fluid Tech
WWW.SUMY.IR

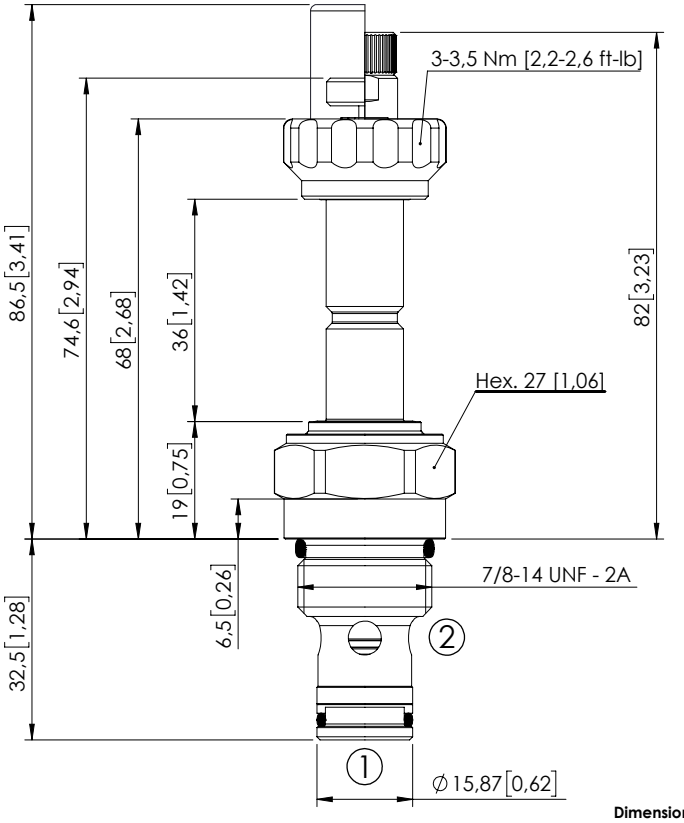

Dimensions: mm [inches]

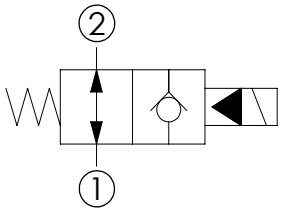

SPECIFICATIONS

Max. operating pressure:	350/500 bar (5000/7200 psi)
Rated flow:	80 l/min (21 gpm)
Cavity:	SAE-10-2N
Weight:	0,18 kg (0,40 lbs)
Min. voltage required:	90% of nominal
Coil type:	M7 or M3 type
Ambient temperature:	-20/+50 °C (-4/+122 °F)
Contamination class to ISO 4406:	See technical spec.
Seal kit:	RA900082
Installation torque:	55 - 62 Nm (41 - 46 ft-lb)
MTTFd:	150 - 1200 years: See technical spec.

NOTES

For other configurations/quick codes not available in this catalogue page please consult factory

PATENT PENDING

OPTIONS

Standard

Push style override

Knob style override

SEALING CAP

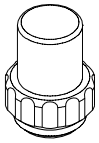

Ordering code:
AT000113

CURVES

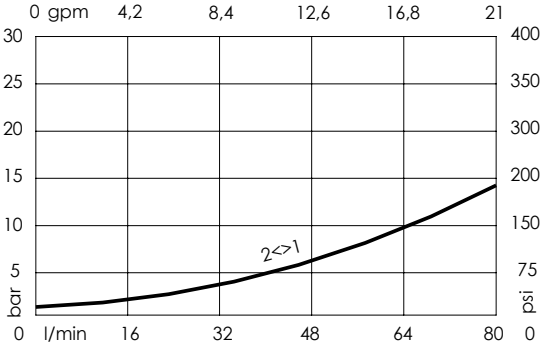

ORDERING CODES

Quick code	Description	Options	Max operating pressure	
CE000268	CEBN-080-NAFN-04-S10-N350	Standard	350 bar (5000 psi)	
CE000269	CEBN-080-NAFP-04-S10-N350	Push style override	350 bar (5000 psi)	
CE000270	CEBN-080-NAFK-04-S10-N350	Knob style override	350 bar (5000 psi)	
CE000568	CEBN-080-NAFN-04-S10-N500	Standard	500 bar (7200 psi)	
CE000569	CEBN-080-NAFP-04-S10-N500	Push style override	500 bar (7200 psi)	
CE000570	CEBN-080-NAFK-04-S10-N500	Knob style override	500 bar (7200 psi)	

Revision D1

SOLENOID OPERATED CARTRIDGE

CEBN-310-NAFN-04

PILOT OPERATED POPPET TYPE

ATLANTIC Fluid Tech
WWW.SUMY.IR

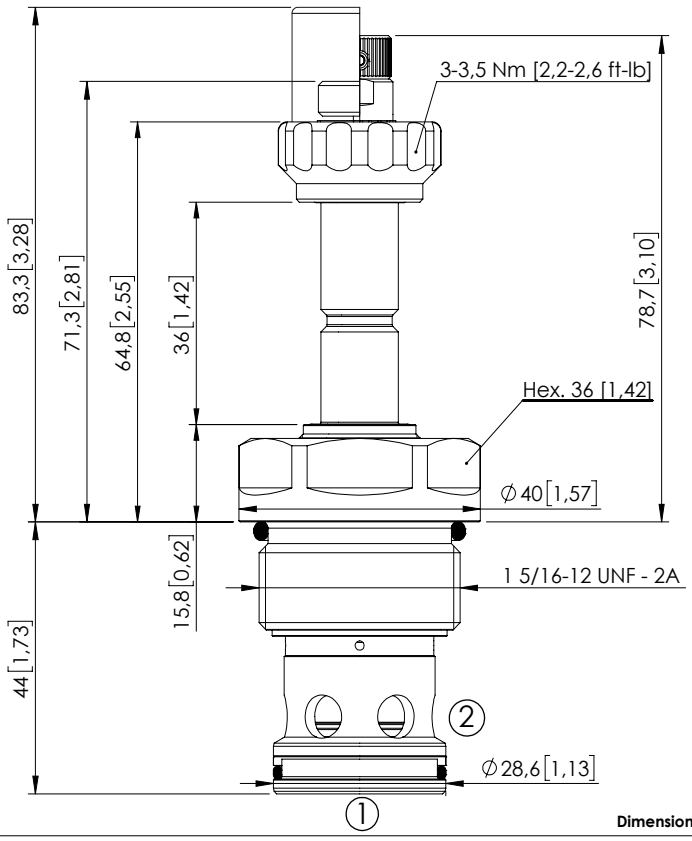

Dimensions: mm [inches]

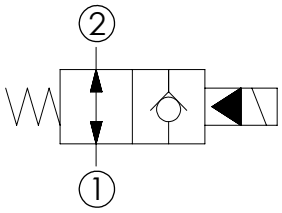

SPECIFICATIONS

Max. operating pressure:	350/500 bar (5000/7200 psi)
Rated flow:	310 l/min (82 gpm)
Cavity:	SAE-16-2N
Weight:	0,36 kg (0,79 lbs)
Min. voltage required:	90% of nominal
Coil type:	M7 or M3 type
Ambient temperature:	-20/+50 °C (-4/+122 °F)
Contamination class to ISO 4406:	See technical spec.
Seal kit:	RA900084
Installation torque:	200 - 210 Nm (148 - 155 ft-lb)
MTTFd:	150 - 1200 years: See technical spec.

NOTES

For other configurations/quick codes not available in this catalogue page please consult factory

PATENT PENDING

OPTIONS

Standard

Push style override

Knob style override

SEALING CAP

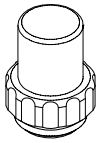

Ordering code:
AT000113

CURVES

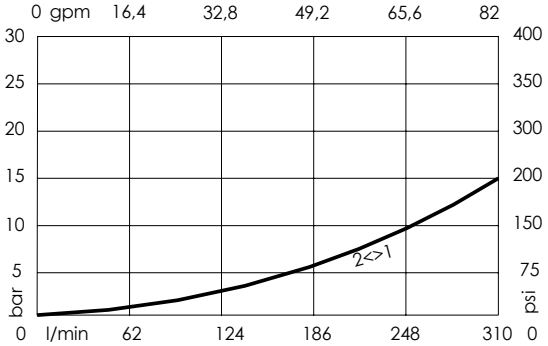

ORDERING CODES

Quick code	Description	Options	Max operating pressure	
CE000408	CEBN-310-NAFN-04-S16-N350	Standard	350 bar (5000 psi)	
CE000409	CEBN-310-NAFP-04-S16-N350	Push style override	350 bar (5000 psi)	
CE000410	CEBN-310-NAFK-04-S16-N350	Knob style override	350 bar (5000 psi)	
CE000708	CEBN-310-NAFN-04-S16-N500	Standard	500 bar (7200 psi)	
CE000709	CEBN-310-NAFP-04-S16-N500	Push style override	500 bar (7200 psi)	
CE000710	CEBN-310-NAFK-04-S16-N500	Knob style override	500 bar (7200 psi)	

Revision H

SOLENOID OPERATED CARTRIDGE

CEBE-040-NCFN-31

PILOT OPERATED
POPPET TYPE

ATLANTIC Fluid Tech
WWW.SUMY.IR

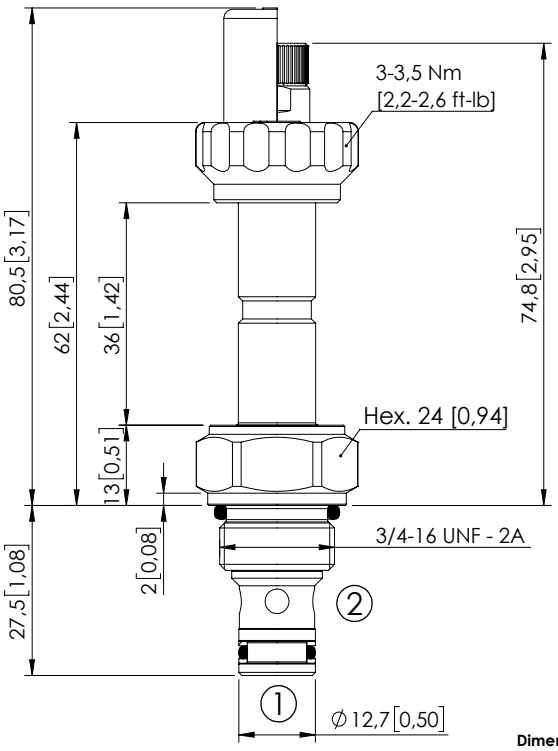

Dimensions: mm [inches]

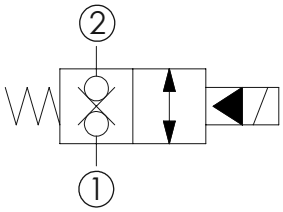

SPECIFICATIONS

Max. operating pressure:	350 bar (5000 psi)
Rated flow:	40 l/min (11 gpm)
Cavity:	SAE-08-2N
Weight:	0,13 kg (0,29 lbs)
Min. voltage required:	90% of nominal
Coil type:	M7 or M3 type
Ambient temperature:	-20/+50 °C (-4/+122 °F)
Contamination class to ISO 4406:	See technical spec.
Seal kit:	RB900081
Installation torque:	45 - 50 Nm (33,2 - 36,9 ft-lb)
MTTFd:	150 - 1200 years: See technical spec.

NOTES

For other configurations/quick codes not available in this catalogue page please consult factory

PATENT PENDING

OPTIONS

Standard

Knob style override

SEALING CAP

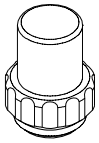

Ordering code:
AT000113

CURVES

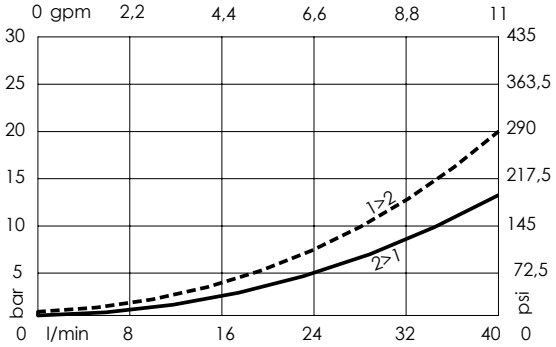

ORDERING CODES

Quick code	Description	Options	Max operating pressure	
CE001875	CEBE-040-NCFN-31-S08-N350	Standard	350 bar (5000 psi)	
CE001876	CEBE-040-NCFK-31-S08-N350	Knob style override	350 bar (5000 psi)	

Revision B

SOLENOID OPERATED CARTRIDGE

CEBN-060-NCFN-31

PILOT OPERATED POPPET TYPE

ATLANTIC Fluid Tech
WWW.SUMY.IR

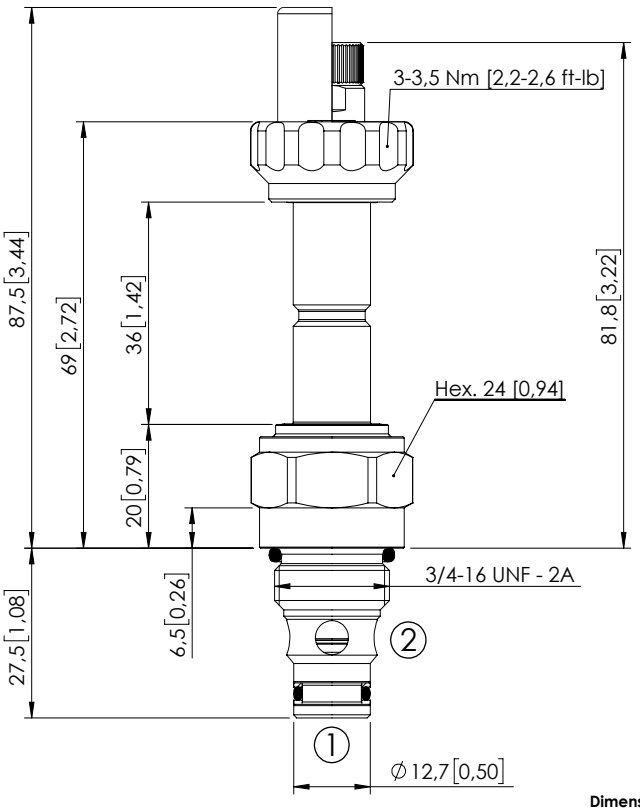

Dimensions: mm [inches]

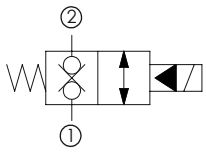

With extra spring

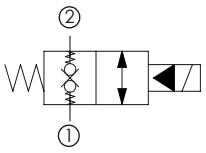

SPECIFICATIONS

Max. operating pressure:	350/500 bar (5000/7200 psi)
Rated flow:	60 l/min (16 gpm)
Cavity:	SAE-08-2N
Weight:	0,15 kg (0,33 lbs)
Min. voltage required:	90% of nominal
Coil type:	M7 or M3 type
Ambient temperature:	-20/+50 °C (-4/+122 °F)
Contamination class to ISO 4406:	See technical spec.
Seal kit:	RB900081
Installation torque:	45 - 50 Nm (33 - 37 ft-lb)
MTTFd:	150 - 1200 years: See technical spec.

NOTES

For other configurations/quick codes not available in this catalogue page please consult factory

PATENT PENDING

OPTIONS

Standard

Knob style override

SEALING CAP

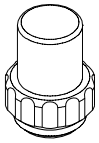

Ordering code:
AT000113

CURVES

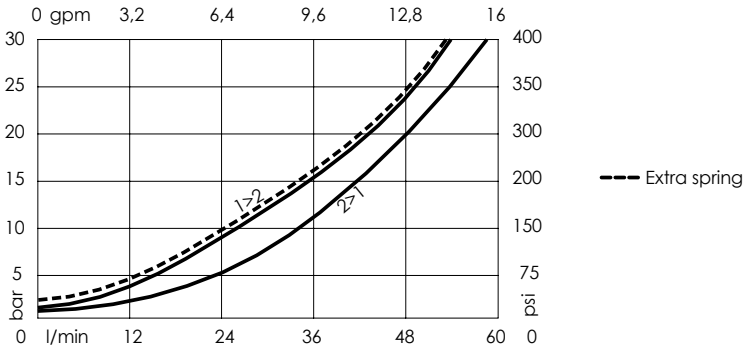

ORDERING CODES

Quick code	Description	Options	Max operating pressure	Extra Spring
CE000226	CEBN-060-NCFN-31-S08-N350	Standard	350 bar (5000 psi)	No
CE000228	CEBN-060-NCFK-31-S08-N350	Knob style override	350 bar (5000 psi)	No
CE000227	CEBN-060-XCFN-31-S08-N350	Standard	350 bar (5000 psi)	Yes
CE000229	CEBN-060-XCFK-31-S08-N350	Knob style override	350 bar (5000 psi)	Yes
CE000526	CEBN-060-NCFN-31-S08-N500	Standard	500 bar (7200 psi)	No
CE000528	CEBN-060-NCFK-31-S08-N500	Knob style override	500 bar (7200 psi)	No

Revision H1

SOLENOID OPERATED CARTRIDGE

CEBN-080-NCFN-31

PILOT OPERATED POPPET TYPE

ATLANTIC Fluid Tech
WWW.SUMY.IR

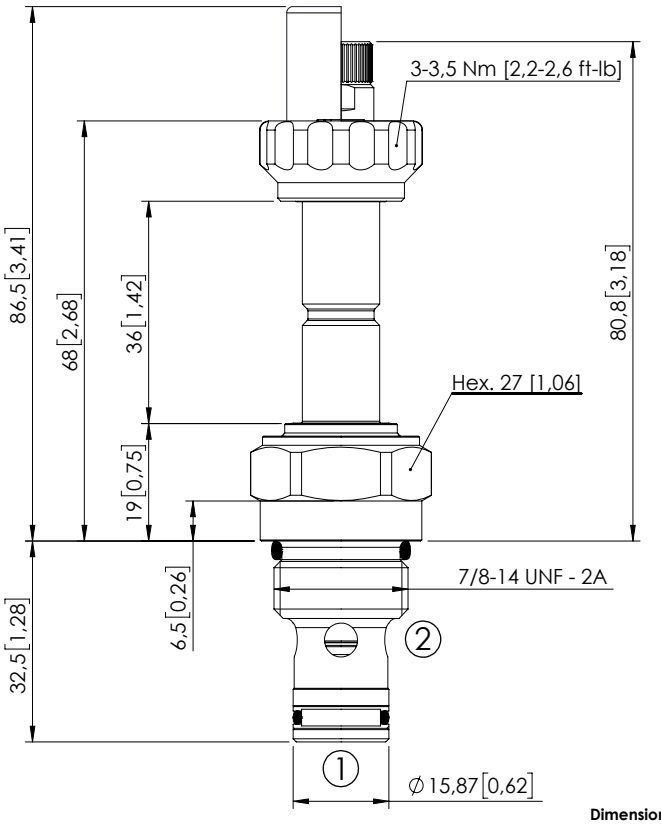

Dimensions: mm [inches]

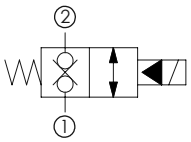

With extra spring

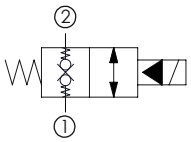

SPECIFICATIONS

Max. operating pressure:	350/500 bar (5000/7200 psi)
Rated flow:	80 l/min (21 gpm)
Cavity:	SAE-10-2N
Weight:	0,18 kg (0,40 lbs)
Min. voltage required:	90% of nominal
Coil type:	M7 or M3 type
Ambient temperature:	-20/+50 °C (-4/+122 °F)
Contamination class to ISO 4406:	See technical spec.
Seal kit:	RB900082
Installation torque:	55 - 62 Nm (41 - 46 ft-lb)
MTTFd:	150 - 1200 years: See technical spec.

NOTES

For other configurations/quick codes not available in this catalogue page please consult factory

PATENT PENDING

OPTIONS

Standard

Knob style override

SEALING CAP

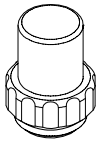

Ordering code:
AT000113

CURVES

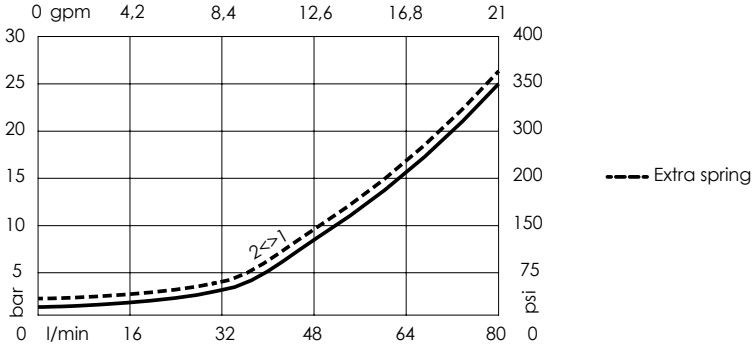

ORDERING CODES

Quick code	Description	Options	Max operating pressure	Extra Spring
CE000261	CEBN-080-NCFN-31-S10-N350	Standard	350 bar (5000 psi)	No
CE000263	CEBN-080-NCFK-31-S10-N350	Knob style override	350 bar (5000 psi)	No
CE000262	CEBN-080-XCFN-31-S10-N350	Standard	350 bar (5000 psi)	Yes
CE000264	CEBN-080-XCFK-31-S10-N350	Knob style override	350 bar (5000 psi)	Yes
CE000561	CEBN-080-NCFN-31-S10-N500	Standard	500 bar (7200 psi)	No
CE000563	CEBN-080-NCFK-31-S10-N500	Knob style override	500 bar (7200 psi)	No

Revision G1

SOLENOID OPERATED CARTRIDGE

CEBN-190-NCFN-31

PILOT OPERATED
POPPET TYPE

ATLANTIC Fluid Tech
WWW.SUMY.IR

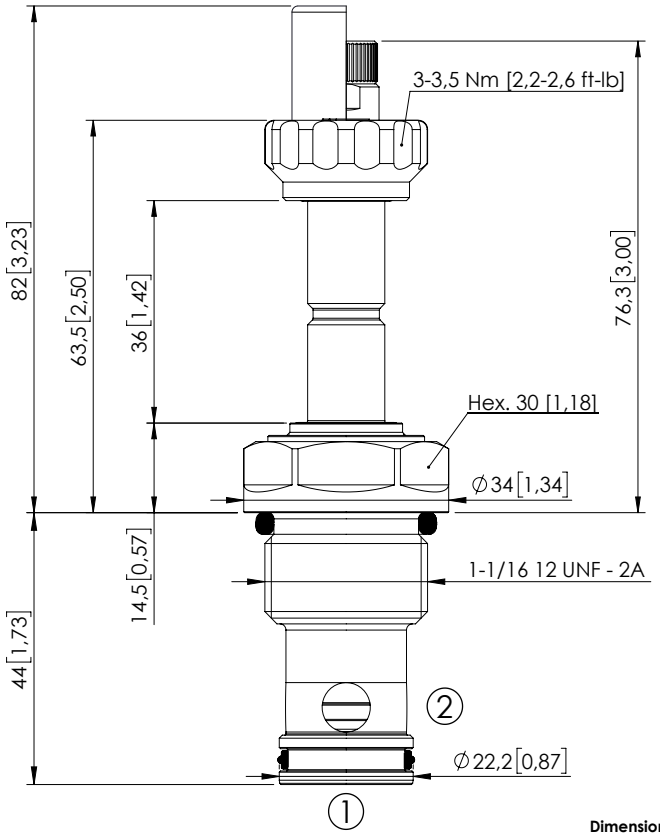

Dimensions: mm [inches]

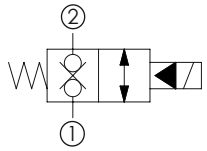

With extra spring

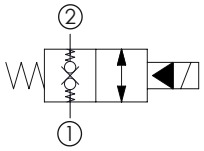

SPECIFICATIONS

Max. operating pressure:	350/500 bar (5000/7200 psi)
Rated flow:	190 l/min (50 gpm)
Cavity:	SAE-12-2N
Weight:	0.25 kg (0,55 lbs)
Min. voltage required:	90% of nominal
Coil type:	M7 or M3 type
Ambient temperature:	-20/+50 °C (-4/+122 °F)
Contamination class to ISO 4406:	See technical spec.
Seal kit:	RB600083
Installation torque:	135 - 150 Nm (100 - 111 ft-lb)
MTTFd:	150 - 1200 years: See technical spec.

NOTES

For other configurations/quick codes not available in this catalogue page please consult factory

PATENT PENDING

OPTIONS

Standard

Knob style override

SEALING CAP

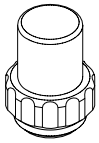

Ordering code:
AT000113

CURVES

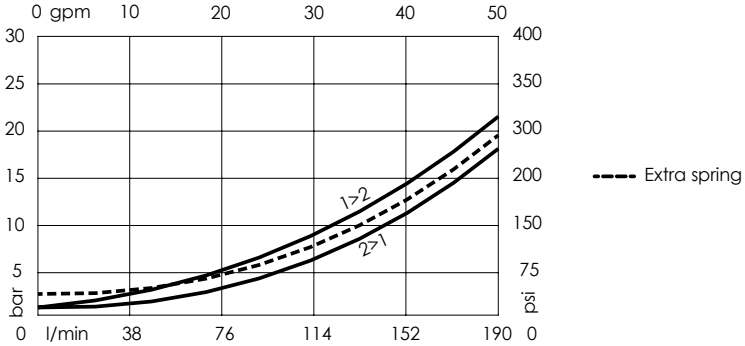

ORDERING CODES

Quick code	Description	Options	Max operating pressure	Extra Spring
CE000331	CEBN-190-NCFN-31-S12-N350	Standard	350 bar (5000 psi)	No
CE000333	CEBN-190-NCFK-31-S12-N350	Knob style override	350 bar (5000 psi)	No
CE000332	CEBN-190-XCFN-31-S12-N350	Standard	350 bar (5000 psi)	Yes
CE000334	CEBN-190-XCFK-31-S12-N350	Knob style override	350 bar (5000 psi)	Yes
CE000631	CEBN-190-NCFN-31-S12-N500	Standard	500 bar (7200 psi)	No
CE000633	CEBN-190-NCFK-31-S12-N500	Knob style override	500 bar (7200 psi)	No

Revision D

SOLENOID OPERATED CARTRIDGE

CEBN-310-NCFN-31

PILOT OPERATED POPPET TYPE

ATLANTIC Fluid Tech
WWW.SUMY.IR

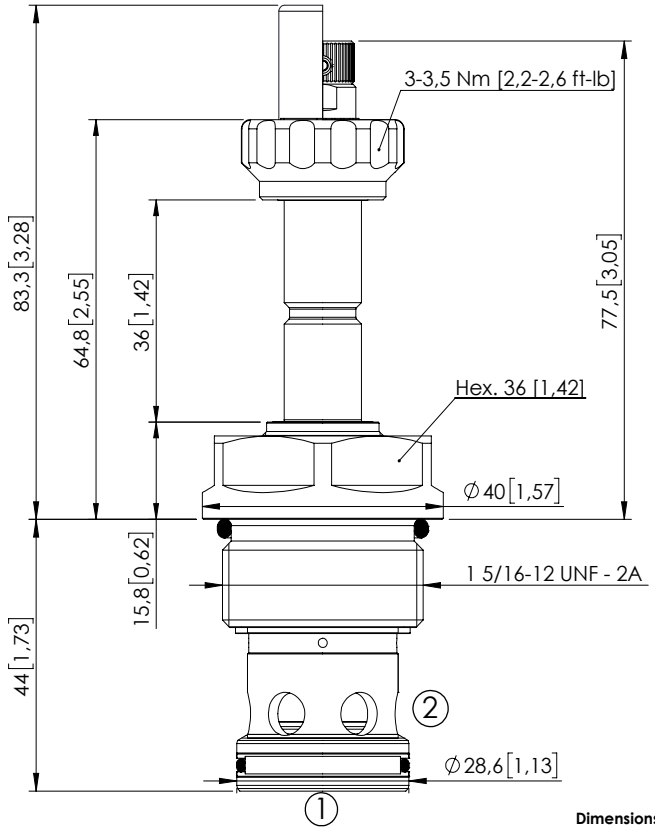

Dimensions: mm [inches]

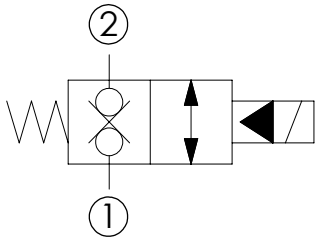

SPECIFICATIONS

Max. operating pressure:	350/500 bar (5000/7200 psi)
Rated flow:	310 l/min (82 gpm)
Cavity:	SAE-16-2N
Weight:	0,36 kg (0,79 lbs)
Min. voltage required:	90% of nominal
Coil type:	M7 or M3 type
Ambient temperature:	-20/+50 °C (-4/+122 °F)
Contamination class to ISO 4406:	See technical spec.
Seal kit:	RB900084
Installation torque:	200 - 210 Nm (148 - 155 ft-lb)
MTTFd:	150 - 1200 years: See technical spec.

NOTES

For other configurations/quick codes not available in this catalogue page please consult factory

PATENT PENDING

OPTIONS

Standard

Knob style override

SEALING CAP

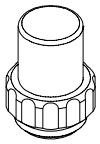

Ordering code:
AT000113

CURVES

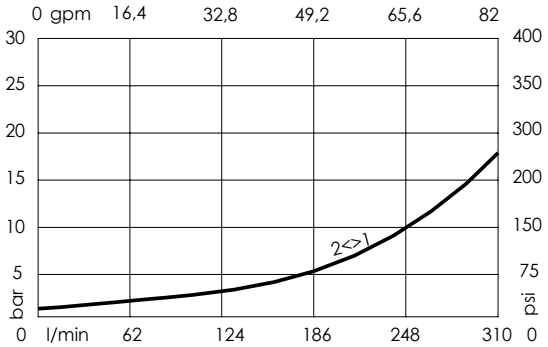

ORDERING CODES

Quick code	Description	Options	Max operating pressure	
CE000401	CEBN-310-NCFN-31-S16-N350	Standard	350 bar (5000 psi)	
CE000403	CEBN-310-NCFK-31-S16-N350	Knob style override	350 bar (5000 psi)	
CE000701	CEBN-310-NCFN-31-S16-N500	Standard	500 bar (7200 psi)	
CE000703	CEBN-310-NCFK-31-S16-N500	Knob style override	500 bar (7200 psi)	

Revision F1

SOLENOID OPERATED CARTRIDGE

CEBE-040-NAFN-32

PILOT OPERATED
POPPET TYPE

ATLANTIC Fluid Tech
WWW.SUMY.IR

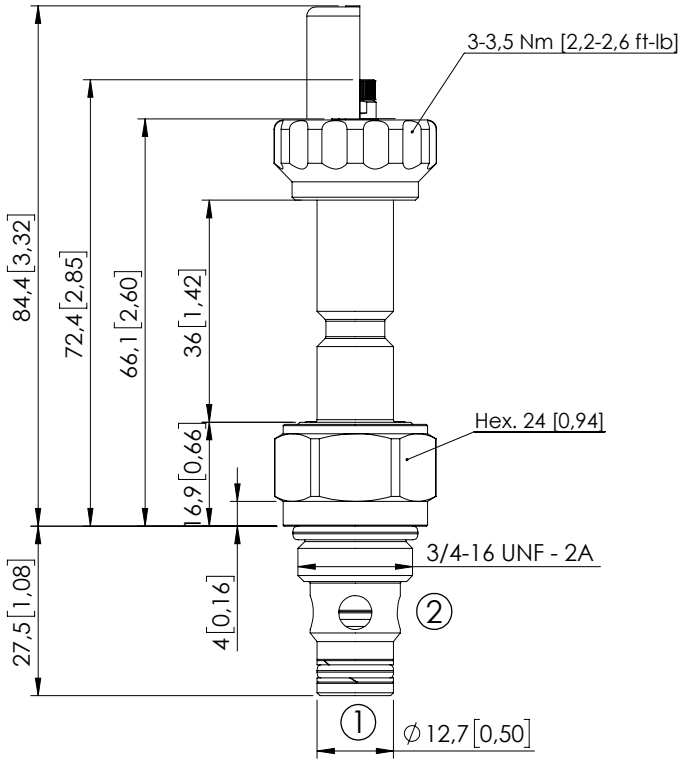

Dimensions: mm [inches]

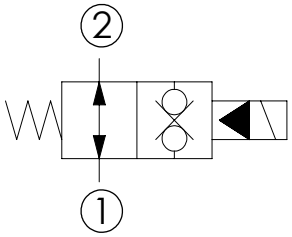

SPECIFICATIONS

Max. operating pressure:	350 bar (5000 psi)
Rated flow:	40 l/min (11 gpm)
Cavity:	SAE-08-2N
Weight:	0,13 kg (0,29 lbs)
Min. voltage required:	90% of nominal
Coil type:	M7 or M3 type
Ambient temperature:	-20/+50 °C (-4/+122 °F)
Contamination class to ISO 4406:	See technical spec.
Seal kit:	RB900081
Installation torque:	45 - 50 Nm (33,2 - 36,9 ft-lb)
MTTFd:	150 - 1200 years: See technical spec.

NOTES

For other configurations/quick codes not available in this catalogue page please consult factory

PATENT PENDING

OPTIONS

Standard

Push style override

Knob style override

SEALING CAP

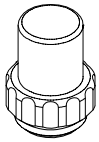

Ordering code:
AT000113

CURVES

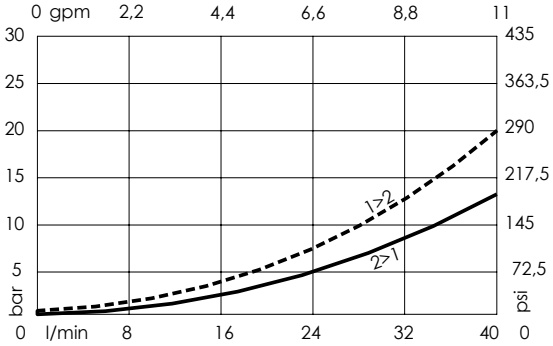

ORDERING CODES

Quick code	Description	Options	Max operating pressure	
CE001877	CEBE-040-NAFN-32-S08-N350	Standard	350 bar (5000 psi)	
CE001878	CEBE-040-NAFP-32-S08-N350	Push style override	350 bar (5000 psi)	
CE001879	CEBE-040-NAFK-32-S08-N350	Knob style override	350 bar (5000 psi)	

Revision B

SOLENOID OPERATED CARTRIDGE

CEBN-060-NAFN-32

PILOT OPERATED POPPET TYPE

ATLANTIC Fluid Tech
WWW.SUMY.IR

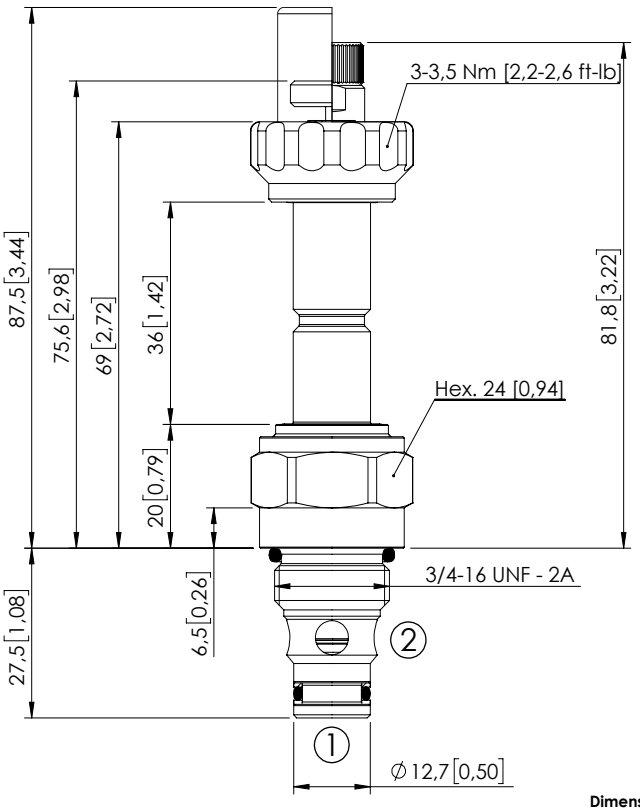

Dimensions: mm [inches]

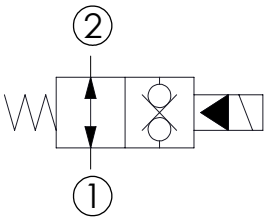

SPECIFICATIONS

Max. operating pressure:	350/500 bar (5000/7200 psi)
Rated flow:	60 l/min (16 gpm)
Cavity:	SAE-08-2N
Weight:	0,15 kg (0,33 lbs)
Min. voltage required:	90% of nominal
Coil type:	M7 or M3 type
Ambient temperature:	-20/+50 °C (-4/+122 °F)
Contamination class to ISO 4406:	See technical spec.
Seal kit:	RB900081
Installation torque:	45 - 50 Nm (33 - 37 ft-lb)
MTTFd:	150 - 1200 years: See technical spec.

NOTES

For other configurations/quick codes not available in this catalogue page please consult factory

PATENT PENDING

OPTIONS

Standard

Push style override

Knob style override

SEALING CAP

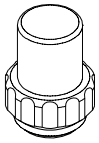

Ordering code:
AT000113

CURVES

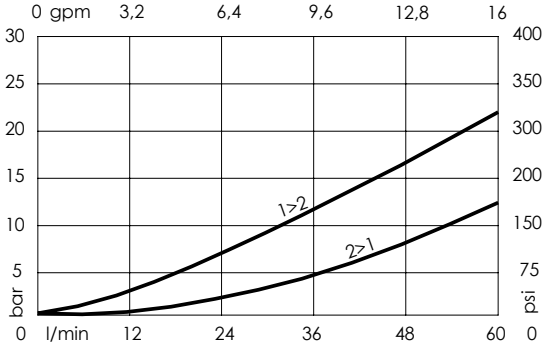

ORDERING CODES

Quick code	Description	Options	Max operating pressure	
CE000242	CEBN-060-NAFN-32-S08-N350	Standard	350 bar (5000 psi)	
CE000243	CEBN-060-NAFP-32-S08-N350	Push style override	350 bar (5000 psi)	
CE000244	CEBN-060-NAFK-32-S08-N350	Knob style override	350 bar (5000 psi)	
CE000542	CEBN-060-NAFN-32-S08-N500	Standard	500 bar (7200 psi)	
CE000543	CEBN-060-NAFP-32-S08-N500	Push style override	500 bar (7200 psi)	
CE000544	CEBN-060-NAFK-32-S08-N500	Knob style override	500 bar (7200 psi)	

Revision G1

SOLENOID OPERATED CARTRIDGE

CEBN-080-NAFN-32

PILOT OPERATED
POPPET TYPE

ATLANTIC Fluid Tech
WWW.SUMY.IR

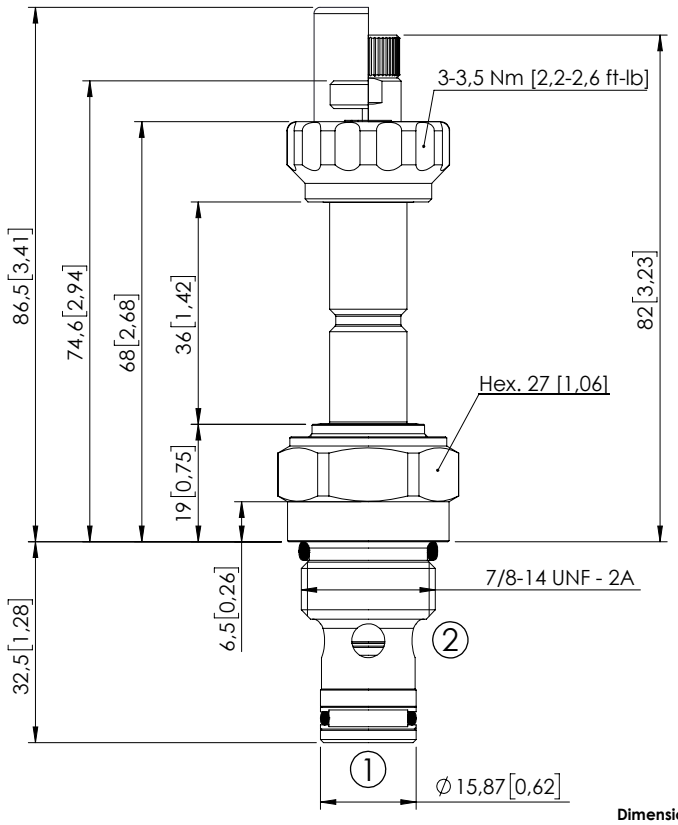

Dimensions: mm [inches]

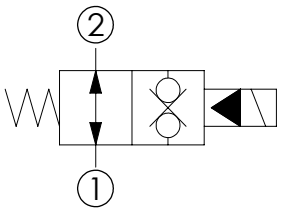

SPECIFICATIONS

Max. operating pressure:	350/500 bar (5000/7200 psi)
Rated flow:	80 l/min (21 gpm)
Cavity:	SAE-10-2N
Weight:	0,18 kg (0,40 lbs)
Min. voltage required:	90% of nominal
Coil type:	M7 or M3 type
Ambient temperature:	-20/+50 °C (-4/+122 °F)
Contamination class to ISO 4406:	See technical spec.
Seal kit:	RB900082
Installation torque:	55 - 62 Nm (41 - 46 ft-lb)
MTTFd:	150 - 1200 years: See technical spec.

NOTES

For other configurations/quick codes not available in this catalogue page please consult factory

PATENT PENDING

OPTIONS

Standard

Push style override

Knob style override

SEALING CAP

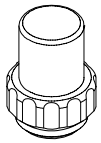

Ordering code:
AT000113

CURVES

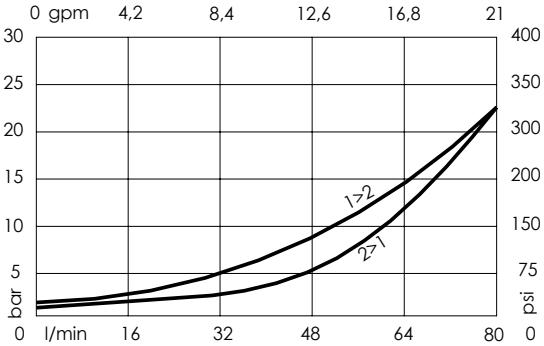

ORDERING CODES

Quick code	Description	Options	Max operating pressure	
CE000277	CEBN-080-NAFN-32-S10-N350	Standard	350 bar (5000 psi)	
CE000278	CEBN-080-NAFP-32-S10-N350	Push style override	350 bar (5000 psi)	
CE000279	CEBN-080-NAFK-32-S10-N350	Knob style override	350 bar (5000 psi)	
CE000577	CEBN-080-NAFN-32-S10-N500	Standard	500 bar (7200 psi)	
CE000578	CEBN-080-NAFP-32-S10-N500	Push style override	500 bar (7200 psi)	
CE000579	CEBN-080-NAFK-32-S10-N500	Knob style override	500 bar (7200 psi)	

Revision G1

SOLENOID OPERATED CARTRIDGE

CEBN-190-NAFN-32

PILOT OPERATED POPPET TYPE

ATLANTIC Fluid Tech
WWW.SUMY.IR

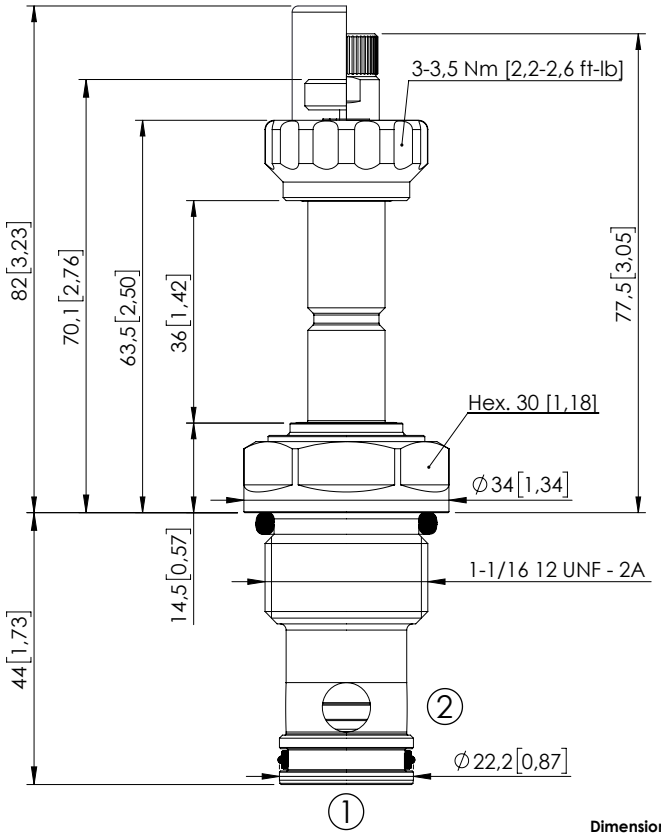

Dimensions: mm [inches]

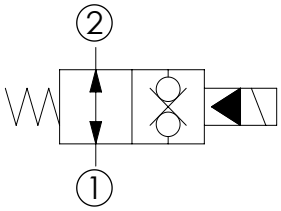

SPECIFICATIONS

Max. operating pressure:	350/500 bar (5000/7200 psi)
Rated flow:	190 l/min (50 gpm)
Cavity:	SAE-12-2N
Weight:	0.25 kg (0,55 lbs)
Min. voltage required:	90% of nominal
Coil type:	M7 or M3 type
Ambient temperature:	-20/+50 °C (-4/+122 °F)
Contamination class to ISO 4406:	See technical spec.
Seal kit:	RB900083
Installation torque:	135 - 150 Nm (100 - 111 ft-lb)
MTTFd:	150 - 1200 years: See technical spec.

NOTES

For other configurations/quick codes not available in this catalogue page please consult factory

PATENT PENDING

OPTIONS

Standard

Push style override

Knob style override

SEALING CAP

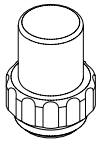

Ordering code:
AT000113

CURVES

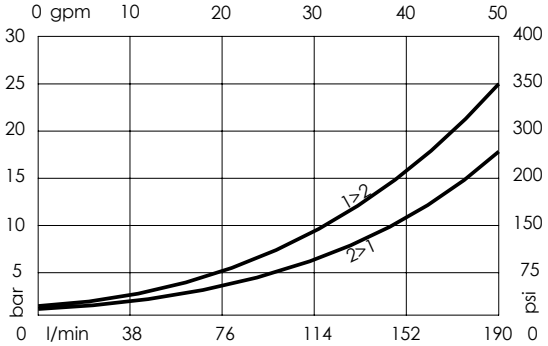

ORDERING CODES

Quick code	Description	Options	Max operating pressure	
CE000347	CEBN-190-NAFN-32-S12-N350	Standard	350 bar (5000 psi)	
CE000348	CEBN-190-NAFP-32-S12-N350	Push style override	350 bar (5000 psi)	
CE000349	CEBN-190-NAFK-32-S12-N350	Knob style override	350 bar (5000 psi)	
CE000647	CEBN-190-NAFN-32-S12-N500	Standard	500 bar (7200 psi)	
CE000648	CEBN-190-NAFP-32-S12-N500	Push style override	500 bar (7200 psi)	
CE000649	CEBN-190-NAFK-32-S12-N500	Knob style override	500 bar (7200 psi)	

Revision D

SOLENOID OPERATED CARTRIDGE

CEBN-310-NAFN-32

PILOT OPERATED POPPET TYPE

ATLANTIC Fluid Tech
WWW.SUMY.IR

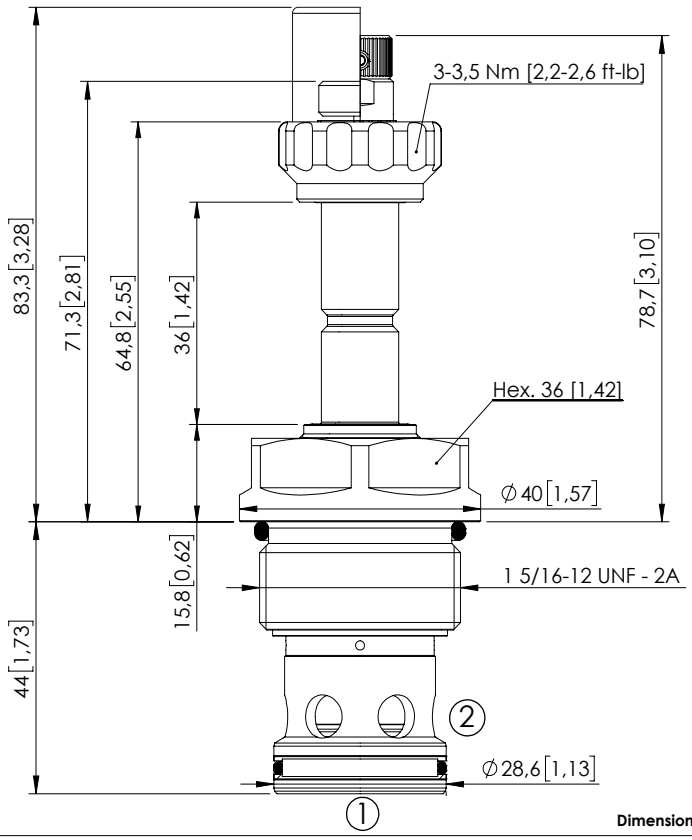

Dimensions: mm [inches]

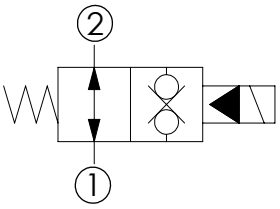

SPECIFICATIONS

Max. operating pressure:	350/500 bar (5000/7200 psi)
Rated flow:	310 l/min (82 gpm)
Cavity:	SAE-16-2N
Weight:	0,36 kg (0,79 lbs)
Min. voltage required:	90% of nominal
Coil type:	M7 or M3 type
Ambient temperature:	-20/+50 °C (-4/+122 °F)
Contamination class to ISO 4406:	See technical spec.
Seal kit:	RB900084
Installation torque:	200 - 210 Nm (148 - 155 ft-lb)
MTTFd:	150 - 1200 years: See technical spec.

NOTES

For other configurations/quick codes not available in this catalogue page please consult factory

PATENT PENDING

OPTIONS

Standard

Push style override

Knob style override

SEALING CAP

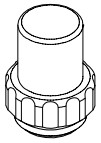

Ordering code:
AT000113

CURVES

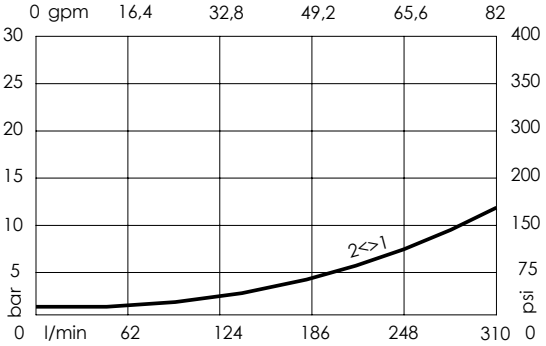

ORDERING CODES

Quick code	Description	Options	Max operating pressure	
CE000417	CEBN-310-NAFN-32-S16-N350	Standard	350 bar (5000 psi)	
CE000418	CEBN-310-NAFP-32-S16-N350	Push style override	350 bar (5000 psi)	
CE000419	CEBN-310-NAFK-32-S16-N350	Knob style override	350 bar (5000 psi)	
CE000717	CEBN-310-NAFN-32-S16-N500	Standard	500 bar (7200 psi)	
CE000718	CEBN-310-NAFP-32-S16-N500	Push style override	500 bar (7200 psi)	
CE000719	CEBN-310-NAFK-32-S16-N500	Knob style override	500 bar (7200 psi)	

Revision F1

SOLENOID OPERATED CARTRIDGE

CEBN-060-NCFN-11

PILOT OPERATED POPPET TYPE

ATLANTIC Fluid Tech
WWW.SUMY.IR

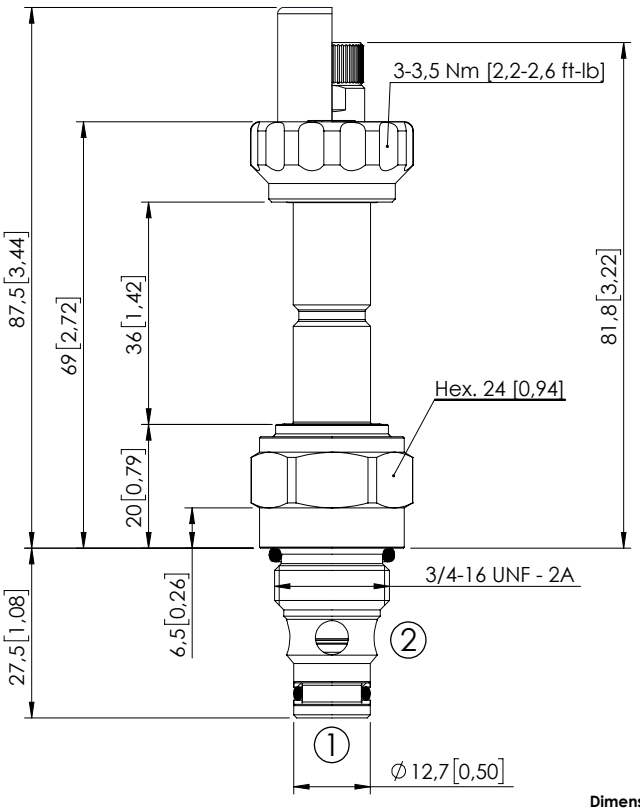

Dimensions: mm [inches]

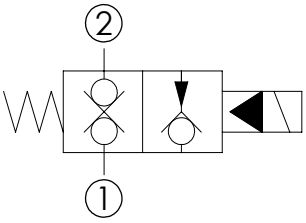

SPECIFICATIONS

Max. operating pressure:	350/500 bar (5000/7200 psi)
Rated flow:	60 l/min (16 gpm)
Cavity:	SAE-08-2N
Weight:	0,15 kg (0,30 lbs)
Min. voltage required:	90% of nominal
Coil type:	M7 or M3 type
Ambient temperature:	-20/+50 °C (-4/+122 °F)
Contamination class to ISO 4406:	See technical spec.
Seal kit:	RB900081
Installation torque:	45 - 50 Nm (33 - 37 ft-lb)
MTTFd:	150 - 1200 years: See technical spec.

NOTES

For other configurations/quick codes not available in this catalogue page please consult factory

PATENT PENDING

OPTIONS

Standard

Knob style override

SEALING CAP

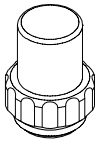

Ordering code:
AT000113

CURVES

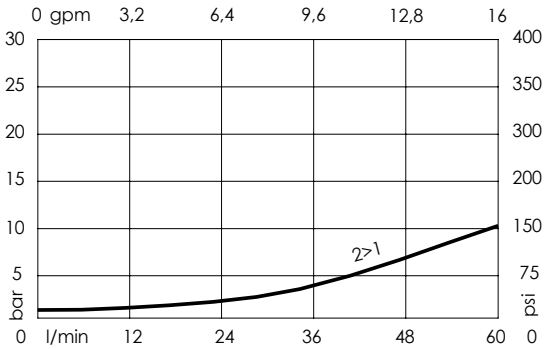

ORDERING CODES

Quick code	Description	Options	Max operating pressure	
CE000222	CEBN-060-NCFN-11-S08-N350	Standard	350 bar (5000 psi)	
CE000224	CEBN-060-NCFK-11-S08-N350	Knob style override	350 bar (5000 psi)	
CE000522	CEBN-060-NCFN-11-S08-N500	Standard	500 bar (7200 psi)	
CE000524	CEBN-060-NCFK-11-S08-N500	Knob style override	500 bar (7200 psi)	

Revision A1

SOLENOID OPERATED CARTRIDGE

CEBN-080-NCFN-11

PILOT OPERATED POPPET TYPE

ATLANTIC Fluid Tech
WWW.SUMY.IR

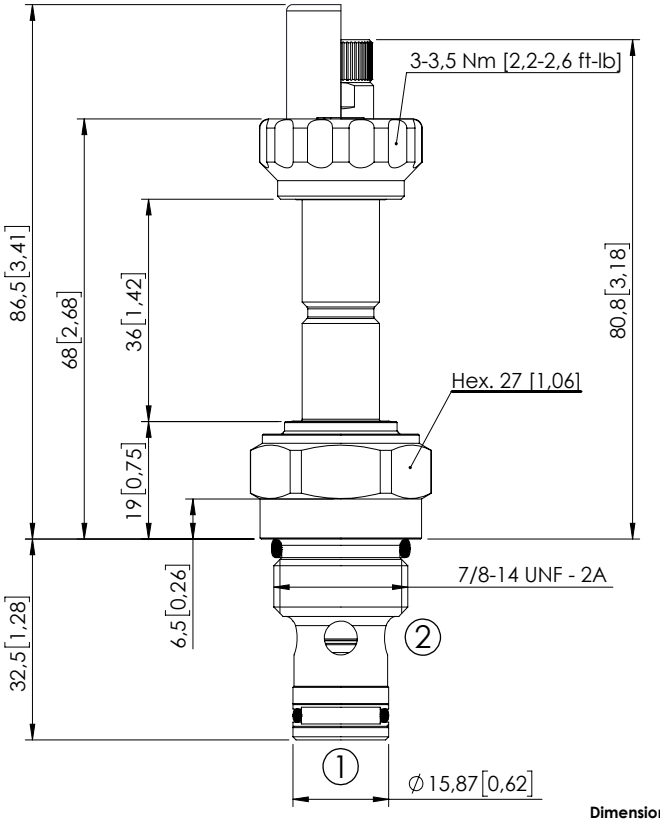

Dimensions: mm [inches]

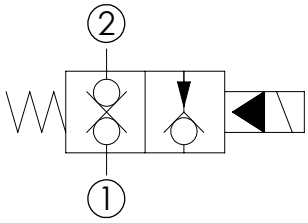

SPECIFICATIONS

Max. operating pressure:	350/500 bar (5000/7200 psi)
Rated flow:	80 l/min (21 gpm)
Cavity:	SAE-10-2N
Weight:	0,18 kg (0,40 lbs)
Min. voltage required:	90% of nominal
Coil type:	M7 or M3 type
Ambient temperature:	-20/+50 °C (-4/+122 °F)
Contamination class to ISO 4406:	See technical spec.
Seal kit:	RB900082
Installation torque:	55 - 62 Nm (41 - 46 ft-lb)
MTTFd:	150 - 1200 years: See technical spec.

NOTES

For other configurations/quick codes not available in this catalogue page please consult factory

PATENT PENDING

OPTIONS

Standard

Knob style override

SEALING CAP

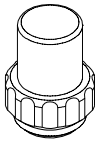

Ordering code:
AT000113

CURVES

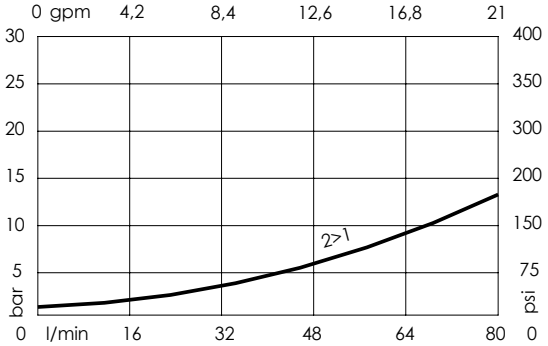

ORDERING CODES

Quick code	Description	Options	Max operating pressure	
CE000257	CEBN-080-NCFN-11-S10-N350	Standard	350 bar (5000 psi)	
CE000259	CEBN-080-NCFK-11-S10-N350	Knob style override	350 bar (5000 psi)	
CE000557	CEBN-080-NCFN-11-S10-N500	Standard	500 bar (7200 psi)	
CE000559	CEBN-080-NCFK-11-S10-N500	Knob style override	500 bar (7200 psi)	

Revision A1

SOLENOID OPERATED CARTRIDGE

CEBN-190-NCFN-11

PILOT OPERATED POPPET TYPE

ATLANTIC Fluid Tech
WWW.SUMY.IR

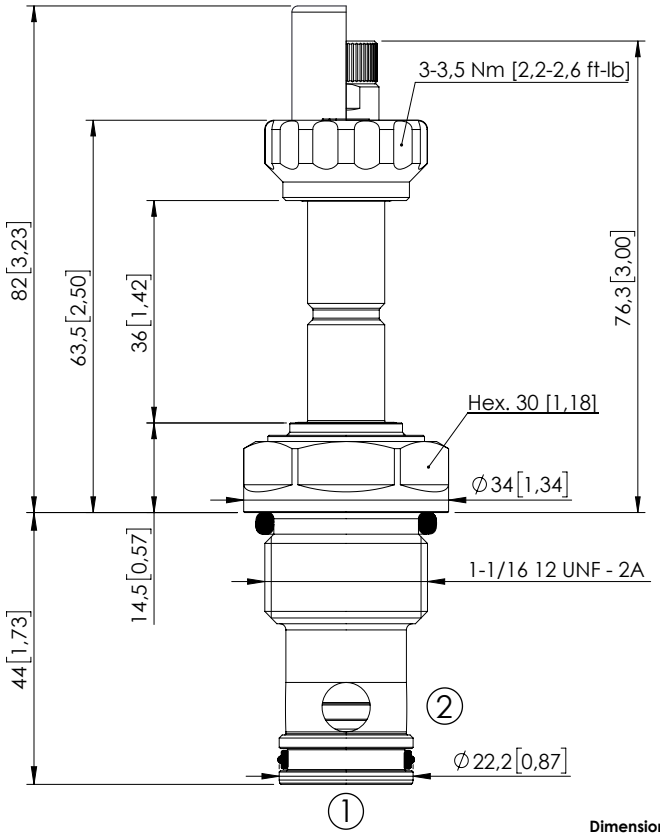

Dimensions: mm [inches]

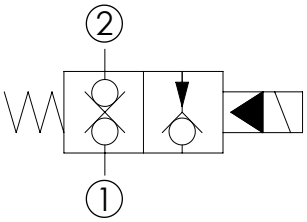

SPECIFICATIONS

Max. operating pressure:	350/500 bar (5000/7200 psi)
Rated flow:	190 l/min (50 gpm)
Cavity:	SAE-12-2N
Weight:	0.25 kg (0,55 lbs)
Min. voltage required:	90% of nominal
Coil type:	M7 or M3 type
Ambient temperature:	-20/+50 °C (-4/+122 °F)
Contamination class to ISO 4406:	See technical spec.
Seal kit:	RB600083
Installation torque:	135 - 150 Nm (100 - 111 ft-lb)
MTTFd:	150 - 1200 years: See technical spec.

NOTES

For other configurations/quick codes not available in this catalogue page please consult factory

PATENT PENDING

OPTIONS

Standard

Knob style override

SEALING CAP

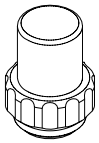

Ordering code:
AT000113

CURVES

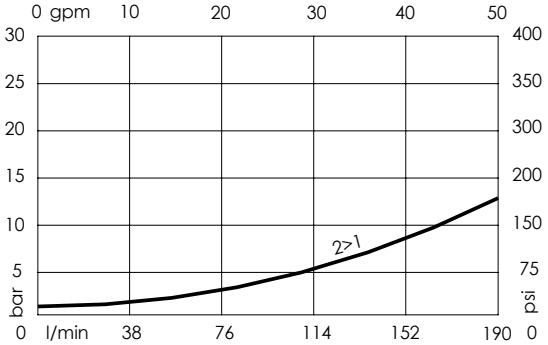

ORDERING CODES

Quick code	Description	Options	Max operating pressure	
CE000327	CEBN-190-NCFN-11-S12-N350	Standard	350 bar (5000 psi)	
CE000329	CEBN-190-NCFK-11-S12-N350	Knob style override	350 bar (5000 psi)	
CE000627	CEBN-190-NCFN-11-S12-N500	Standard	500 bar (7200 psi)	
CE000629	CEBN-190-NCFK-11-S12-N500	Knob style override	500 bar (7200 psi)	

Revision B

SOLENOID OPERATED CARTRIDGE

CEBN-310-NCFN-11

PILOT OPERATED POPPET TYPE

ATLANTIC Fluid Tech
WWW.SUMY.IR

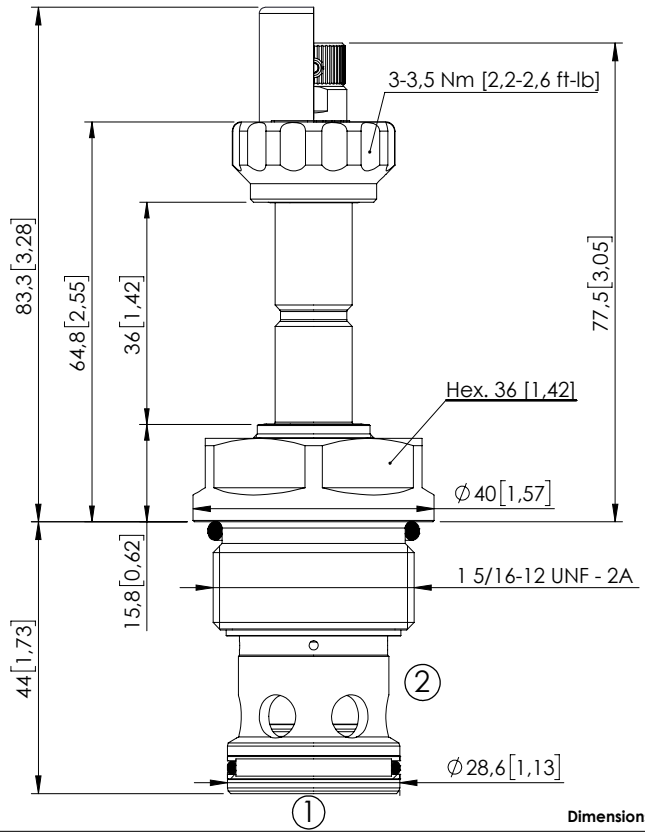

Dimensions: mm [inches]

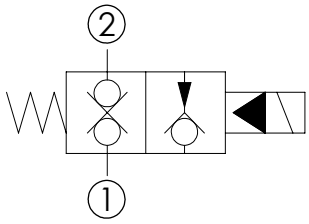

SPECIFICATIONS

Max. operating pressure:	350/500 bar (5000/7200 psi)
Rated flow:	310 l/min (82 gpm)
Cavity:	SAE-16-2N
Weight:	0,36 kg (0,79 lbs)
Min. voltage required:	90% of nominal
Coil type:	M7 or M3 type
Ambient temperature:	-20/+50 °C (-4/+122 °F)
Contamination class to ISO 4406:	See technical spec.
Seal kit:	RB900084
Installation torque:	200 - 210 Nm (148 - 156 ft-lb)
MTTFd:	150 - 1200 years: See technical spec.

NOTES

For other configurations/quick codes not available in this catalogue page please consult factory

PATENT PENDING

OPTIONS

Standard

Knob style override

SEALING CAP

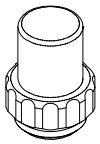

Ordering code:
AT000113

CURVES

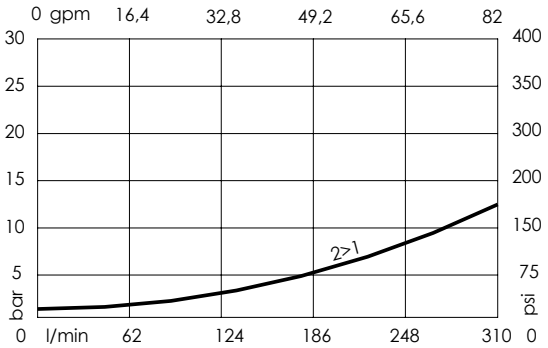

ORDERING CODES

Quick code	Description	Options	Max operating pressure	
CE000397	CEBN-310-NCFN-11-S16-N350	Standard	350 bar (5000 psi)	
CE000399	CEBN-310-NCFK-11-S16-N350	Knob style override	350 bar (5000 psi)	
CE000697	CEBN-310-NCFN-11-S16-N500	Standard	500 bar (7200 psi)	
CE000699	CEBN-310-NCFK-11-S16-N500	Knob style override	500 bar (7200 psi)	

Revision A1

SOLENOID OPERATED CARTRIDGE

CEBN-060-NAFN-12

PILOT OPERATED POPPET TYPE

ATLANTIC Fluid Tech
WWW.SUMY.IR

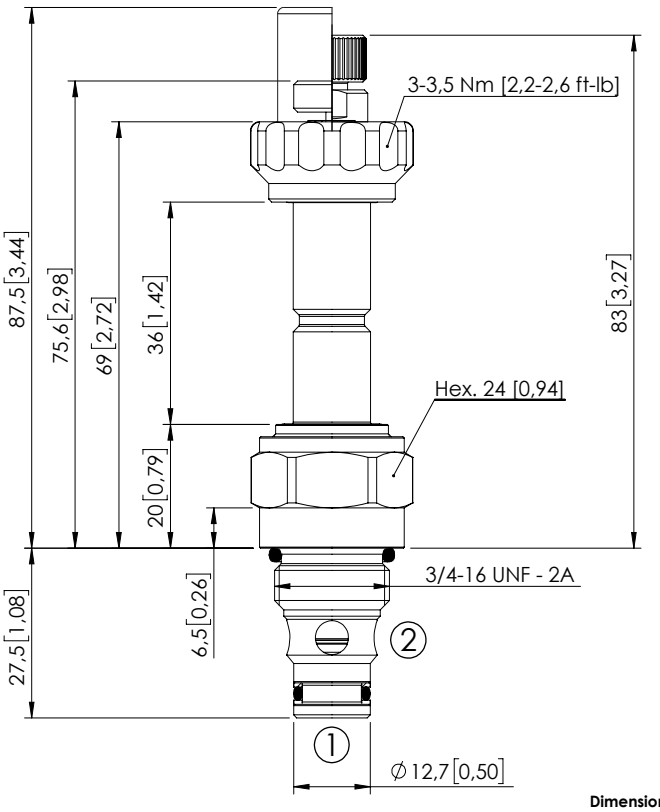

Dimensions: mm [inches]

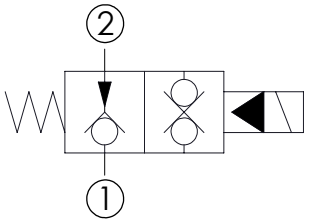

SPECIFICATIONS

Max. operating pressure:	350/500 bar (5000/7200 psi)
Rated flow:	60 l/min (16 gpm)
Cavity:	SAE-08-2N
Weight:	0,15 kg (0,33 lbs)
Min. voltage required:	90% of nominal
Coil type:	M7 or M3 type
Ambient temperature:	-20/+50 °C (-4/+122 °F)
Contamination class to ISO 4406:	See technical spec.
Seal kit:	RB900081
Installation torque:	45 - 50 Nm (33 - 37 ft-lb)
MTTFd:	150 - 1200 years: See technical spec.

NOTES

For other configurations/quick codes not available in this catalogue page please consult factory

PATENT PENDING

OPTIONS

Standard

Push style override

Knob style override

SEALING CAP

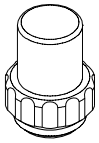

Ordering code:
AT000113

CURVES

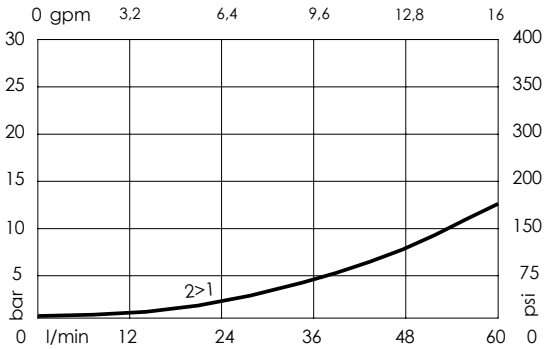

ORDERING CODES

Quick code	Description	Options	Max operating pressure	
CE000239	CEBN-060-NAFN-12-S08-N350	Standard	350 bar (5000 psi)	
CE000240	CEBN-060-NAFP-12-S08-N350	Push style override	350 bar (5000 psi)	
CE000241	CEBN-060-NAFK-12-S08-N350	Knob style override	350 bar (5000 psi)	
CE000539	CEBN-060-NAFN-12-S08-N500	Standard	500 bar (7200 psi)	
CE000540	CEBN-060-NAFP-12-S08-N500	Push style override	500 bar (7200 psi)	
CE000541	CEBN-060-NAFK-12-S08-N500	Knob style override	500 bar (7200 psi)	

Revision A1

SOLENOID OPERATED CARTRIDGE

CEBN-080-NAFN-12

PILOT OPERATED POPPET TYPE

ATLANTIC Fluid Tech
WWW.SUMY.IR

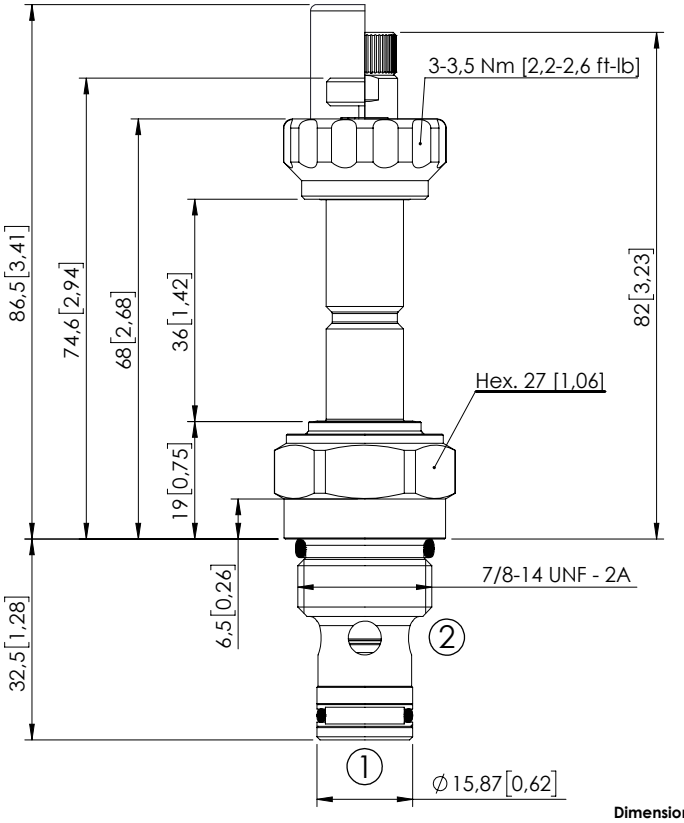

Dimensions: mm [inches]

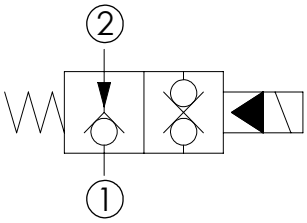

SPECIFICATIONS

Max. operating pressure:	350/500 bar (5000/7200 psi)
Rated flow:	80 l/min (21 gpm)
Cavity:	SAE-10-2N
Weight:	0,18 kg (0,40 lbs)
Min. voltage required:	90% of nominal
Coil type:	M7 or M3 type
Ambient temperature:	-20/+50 °C (-4/+122 °F)
Contamination class to ISO 4406:	See technical spec.
Seal kit:	RB900082
Installation torque:	55 - 62 Nm (41 - 46 ft-lb)
MTTFd:	150 - 1200 years: See technical spec.

NOTES

For other configurations/quick codes not available in this catalogue page please consult factory

PATENT PENDING

OPTIONS

Standard

Push style override

Knob style override

SEALING CAP

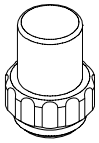

Ordering code:
AT000113

CURVES

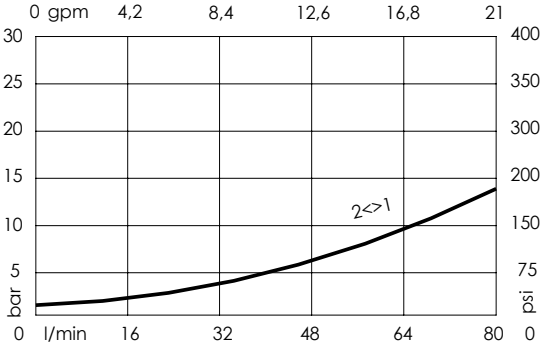

ORDERING CODES

Quick code	Description	Options	Max operating pressure	
CE000274	CEBN-080-NAFN-12-S10-N350	Standard	350 bar (5000 psi)	
CE000275	CEBN-080-NAFP-12-S10-N350	Push style override	350 bar (5000 psi)	
CE000276	CEBN-080-NAFK-12-S10-N350	Knob style override	350 bar (5000 psi)	
CE000574	CEBN-080-NAFN-12-S10-N500	Standard	500 bar (7200 psi)	
CE000575	CEBN-080-NAFP-12-S10-N500	Push style override	500 bar (7200 psi)	
CE000576	CEBN-080-NAFK-12-S10-N500	Knob style override	500 bar (7200 psi)	

Revision A1

SOLENOID OPERATED CARTRIDGE

CEBN-190-NAFN-12

PILOT OPERATED POPPET TYPE

ATLANTIC Fluid Tech
WWW.SUMY.IR

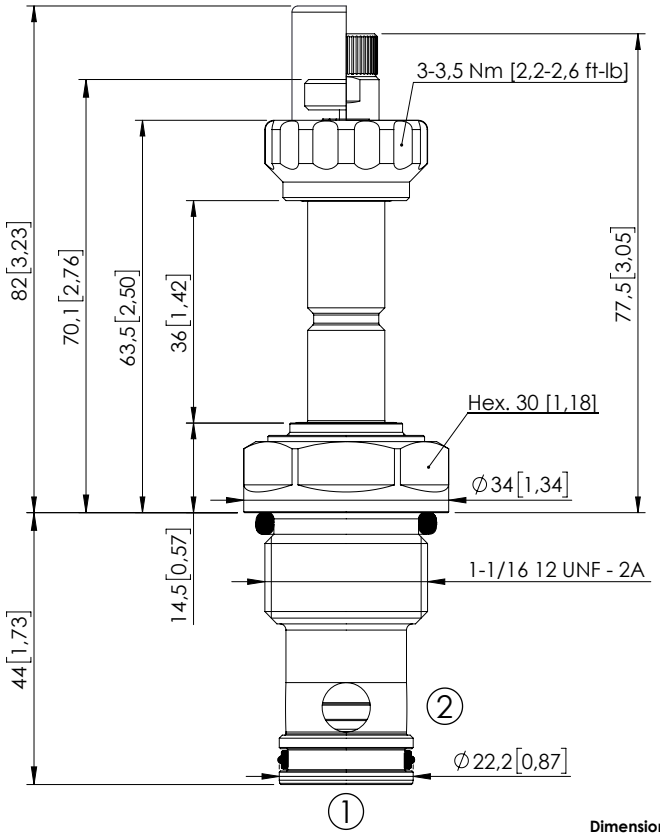

Dimensions: mm [inches]

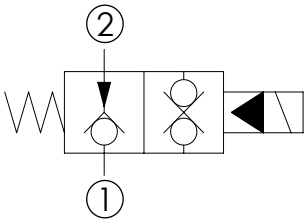

SPECIFICATIONS

Max. operating pressure:	350/500 bar (5000/7200 psi)
Rated flow:	190 l/min (50 gpm)
Cavity:	SAE-12-2N
Weight:	0.25 kg (0,55 lbs)
Min. voltage required:	90% of nominal
Coil type:	M7 or M3 type
Ambient temperature:	-20/+50 °C (-4/+122 °F)
Contamination class to ISO 4406:	See technical spec.
Seal kit:	RB900083
Installation torque:	135 - 150 Nm (100 - 111 ft-lb)
MTTFd:	150 - 1200 years: See technical spec.

NOTES

For other configurations/quick codes not available in this catalogue page please consult factory

PATENT PENDING

OPTIONS

Standard

Push style override

Knob style override

SEALING CAP

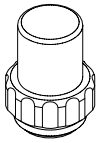

Ordering code:
AT000113

CURVES

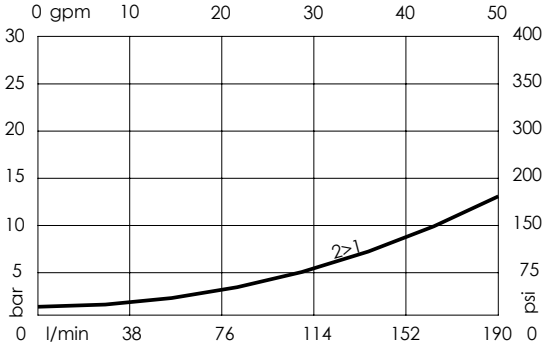

ORDERING CODES

Quick code	Description	Options	Max operating pressure	
CE000344	CEBN-190-NAFN-12-S12-N350	Standard	350 bar (5000 psi)	
CE000345	CEBN-190-NAFP-12-S12-N350	Push style override	350 bar (5000 psi)	
CE000346	CEBN-190-NAFK-12-S12-N350	Knob style override	350 bar (5000 psi)	
CE000644	CEBN-190-NAFN-12-S12-N500	Standard	500 bar (7200 psi)	
CE000645	CEBN-190-NAFP-12-S12-N500	Push style override	500 bar (7200 psi)	
CE000646	CEBN-190-NAFK-12-S12-N500	Knob style override	500 bar (7200 psi)	

Revision A1

SOLENOID OPERATED CARTRIDGE

CEBN-310-NAFN-12

PILOT OPERATED
POPPET TYPE

ATLANTIC Fluid Tech
WWW.SUMY.IR

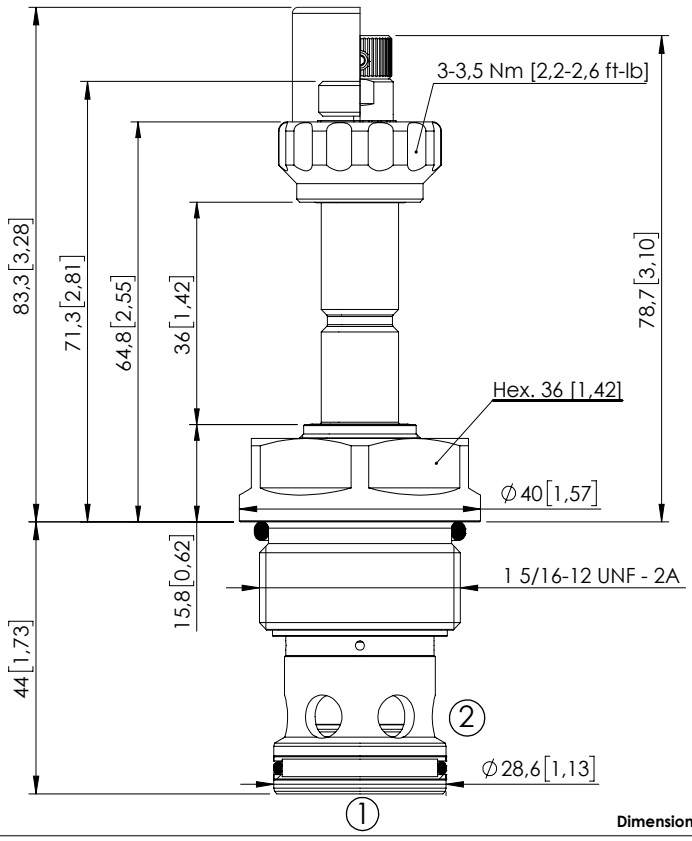

Dimensions: mm [inches]

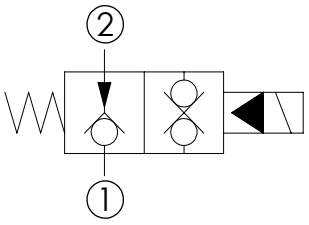

SPECIFICATIONS

Max. operating pressure:	350/500 bar (5000/7200 psi)
Rated flow:	310 l/min (82 gpm)
Cavity:	SAE-16-2N
Weight:	0,36 kg (0,79 lbs)
Min. voltage required:	90% of nominal
Coil type:	M7 or M3 type
Ambient temperature:	-20/+50 °C (-4/+122 °F)
Contamination class to ISO 4406:	See technical spec.
Seal kit:	RB900084
Installation torque:	200 - 210 Nm (148 - 156 ft-lb)
MTTFd:	150 - 1200 years: See technical spec.

NOTES

For other configurations/quick codes not available in this catalogue page please consult factory

PATENT PENDING

OPTIONS

Standard

Push style override

Knob style override

SEALING CAP

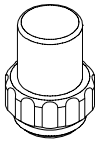

Ordering code:
AT000113

CURVES

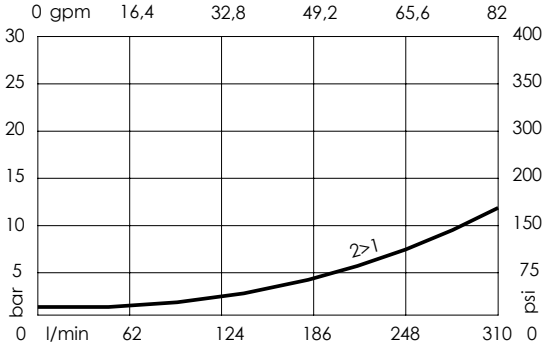

ORDERING CODES

Quick code	Description	Options	Max operating pressure	
CE000414	CEBN-310-NAFN-12-S16-N350	Standard	350 bar (5000 psi)	
CE000415	CEBN-310-NAFP-12-S16-N350	Push style override	350 bar (5000 psi)	
CE000416	CEBN-310-NAFK-12-S16-N350	Knob style override	350 bar (5000 psi)	
CE000714	CEBN-310-NAFN-12-S16-N500	Standard	500 bar (7200 psi)	
CE000715	CEBN-310-NAFP-12-S16-N500	Push style override	500 bar (7200 psi)	
CE000716	CEBN-310-NAFK-12-S16-N500	Knob style override	500 bar (7200 psi)	

Revision A1

SOLENOID OPERATED CARTRIDGE

CEBN-060-XCDR-05

POPPET TYPE
PROXIMITY SENSOR

ATLANTIC Fluid Tech
WWW.SUMY.IR

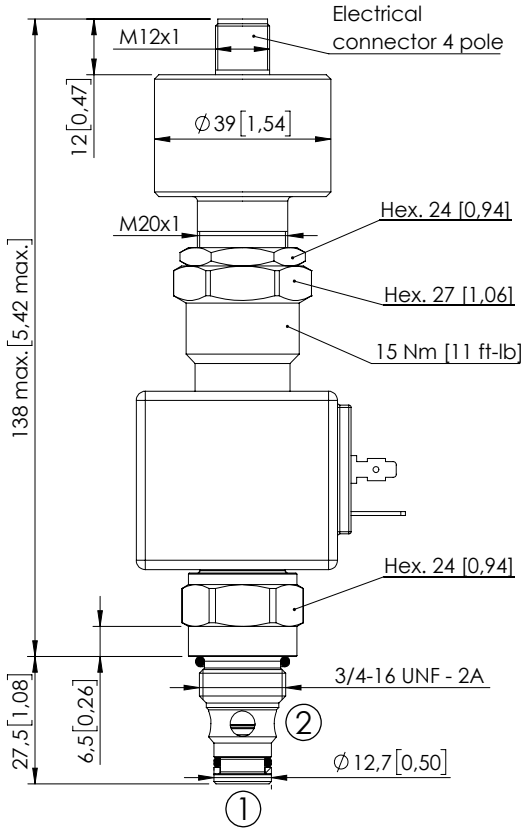

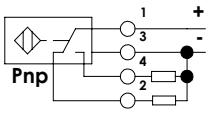

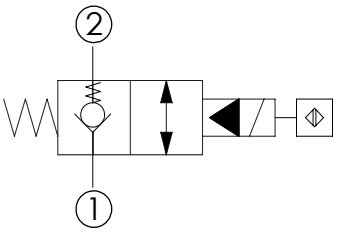

Dimensions: mm [inches]

SPECIFICATIONS

Max. operating pressure:	350 bar (5000 psi)
Rated flow:	60 l/min (16 gpm)
Cavity:	SAE-08-2N
Weight:	0,5 kg (0,33 lbs)
Min. voltage required:	90% of nominal
Coil type:	M7 type
Ambient temperature:	-20/+50 °C (-4/+122 °F)
Contamination class to ISO 4406:	See technical spec.
Seal kit:	RA100081
Installation torque:	45 - 50 Nm (33 - 37 ft-lb)
MTTFd:	150 - 1200 years: See technical spec.
Operating temperature:	-25/+80°C (-13/+176 °F)

NOTES

For other configurations/quick codes not available in this catalogue page please consult factory

CURVES

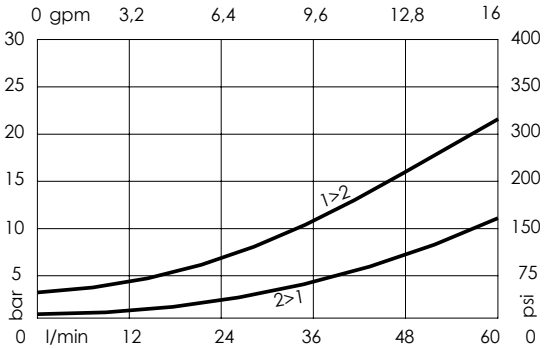

ORDERING CODES

Quick code	Description	Connector	Voltage	Options
CE000472	CEBN-060-XCDR-05-S08-V350-12HR	DIN 43650	12V DC	Proximity sensor
CE000940	CEBN-060-XCDR-05-S08-V350-24HR	DIN 43650	24V DC	Proximity sensor

Revision D

SOLENOID OPERATED CARTRIDGE

CEBN-080-XCDR-05

POPPET TYPE PROXIMITY SENSOR

ATLANTIC Fluid Tech
WWW.SUMY.IR

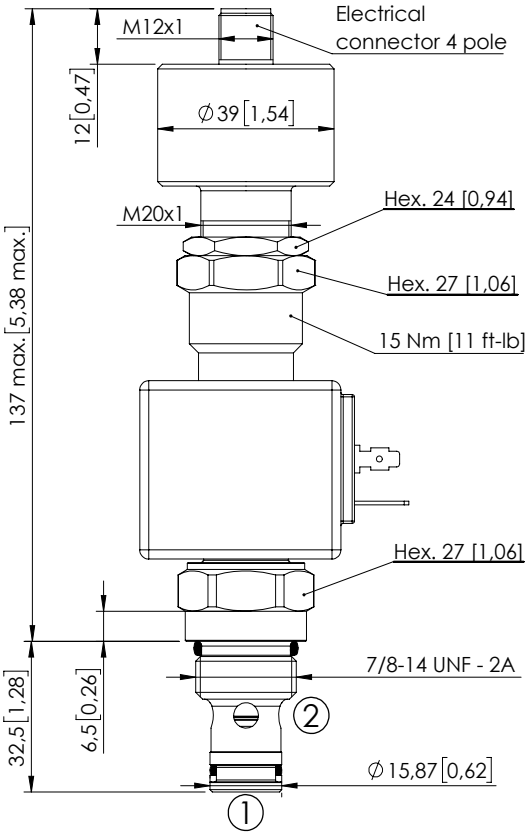

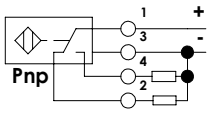

Dimensions: mm [inches]

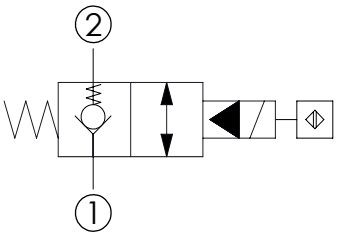

SPECIFICATIONS

Max. operating pressure:	350 bar (5000 psi)
Rated flow:	80 l/min (21 gpm)
Cavity:	SAE-10-2N
Weight:	0,5 kg (0,33 lbs)
Min. voltage required:	90% of nominal
Coil type:	M7 type
Ambient temperature:	-20/+50 °C (-4/+122 °F)
Contamination class to ISO 4406:	See technical spec.
Seal kit:	RA100082
Installation torque:	55 - 62 Nm (41 - 46 ft-lb)
MTTFd:	150 - 1200 years: See technical spec.
Operating temperature:	-25/+80°C (-13/+176 °F)

NOTES

For other configurations/quick codes not available in this catalogue page please consult factory

CURVES

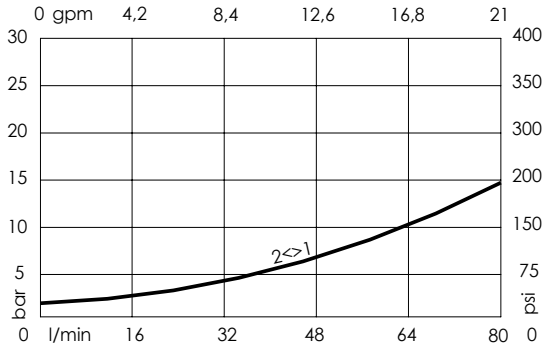

ORDERING CODES

Quick code	Description	Connector	Voltage	Options
CE000473	CEBN-080-XCDR-05-S10-V350-12HR	DIN 43650	12V DC	Proximity sensor
CE000938	CEBN-080-XCDR-05-S10-V350-24HR	DIN 43650	24V DC	Proximity sensor

Revision D

SOLENOID OPERATED CARTRIDGE

CEBN-190-XCDR-05

POPPET TYPE
PROXIMITY SENSOR

ATLANTIC Fluid Tech
WWW.SUMY.IR

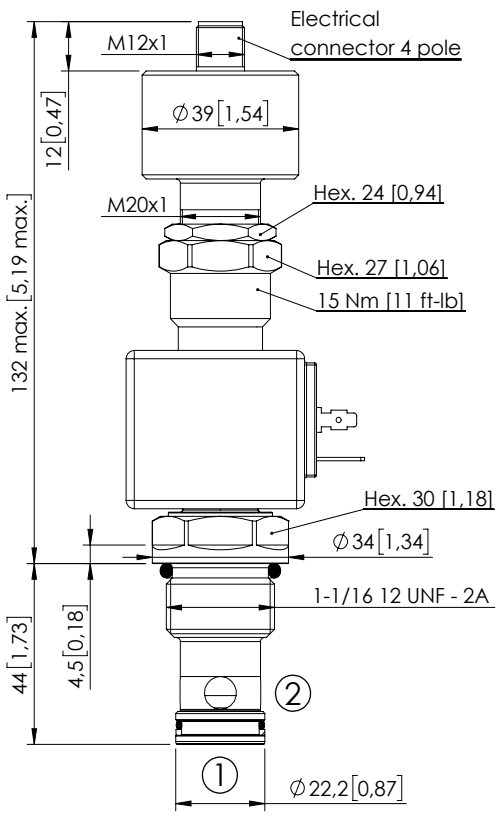

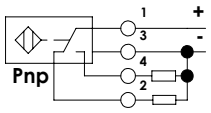

Dimensions: mm [inches]

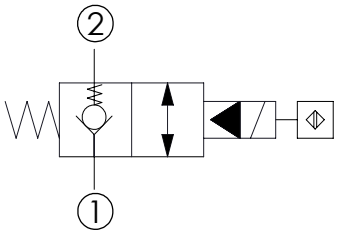

SPECIFICATIONS

Max. operating pressure:	350 bar (5000 psi)
Rated flow:	190 l/min (50 gpm)
Cavity:	SAE-12-2N
Weight:	0,61 kg (1,32 lbs)
Min. voltage required:	90% of nominal
Coil type:	M7 type
Ambient temperature:	-20/+50 °C (-4/+122 °F)
Contamination class to ISO 4406:	See technical spec.
Seal kit:	RA100083
Installation torque:	135 - 150 Nm (100 - 111 ft-lb)
MTTFd:	150 - 1200 years: See technical spec.
Operating temperature:	-25/+80°C (-13/+176 °F)

NOTES

For other configurations/quick codes not available in this catalogue page please consult factory

CURVES

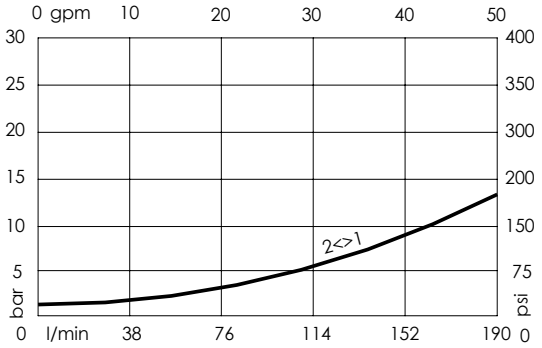

ORDERING CODES

Quick code	Description	Connector	Voltage	Options
CE001090	CEBN-190-XCDR-05-S12-V350-12HR	DIN 43650	12V DC	Proximity sensor
CE001091	CEBN-190-XCDR-05-S12-V350-24HR	DIN 43650	24V DC	Proximity sensor

Revision A1

SOLENOID OPERATED CARTRIDGE

CEBN-310-XCDR-05

POPPET TYPE
PROXIMITY SENSOR

ATLANTIC Fluid Tech
WWW.SUMY.IR

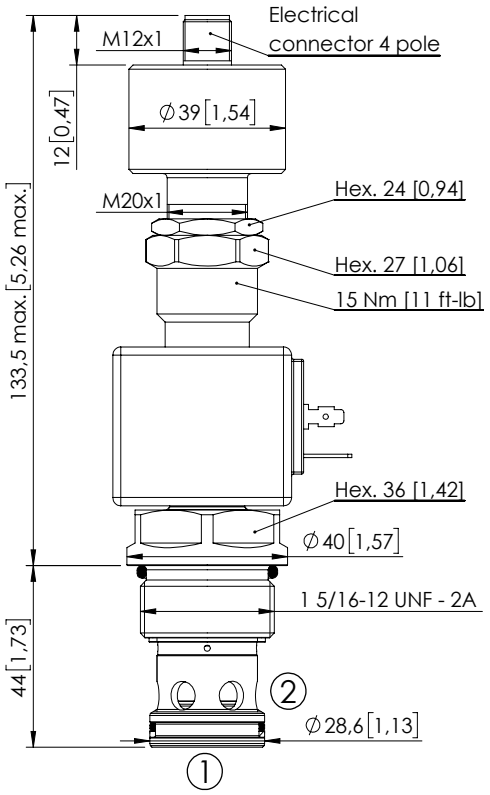

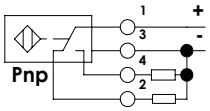

Dimensions: mm [inches]

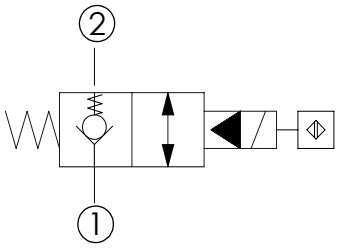

SPECIFICATIONS

Max. operating pressure:	350 bar (5000 psi)
Rated flow:	310 l/min (82 gpm)
Cavity:	SAE-16-2N
Weight:	0,7 kg (1,54 lbs)
Min. voltage required:	90% of nominal
Coil type:	M7 type
Ambient temperature:	-20/+50 °C (-4/+122 °F)
Contamination class to ISO 4406:	See technical spec.
Seal kit:	RA100084
Installation torque:	200 - 210 Nm (148 - 155 ft-lb)
MTTFd:	150 - 1200 years: See technical spec.
Operating temperature:	-25/+80°C (-13/+176 °F)

NOTES

For other configurations/quick codes not available in this catalogue page please consult factory

CURVES

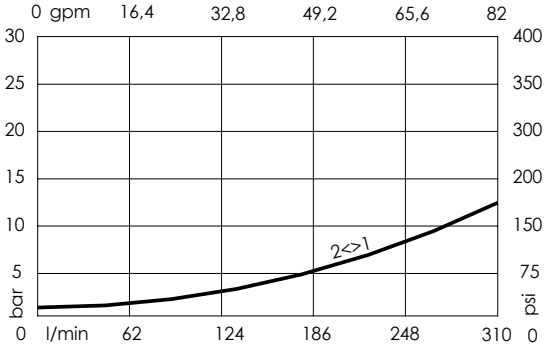

ORDERING CODES

Quick code	Description	Connector	Voltage	Options
CE000475	CEBN-310-XCDR-05-S16-V350-12HR	DIN 43650	12V DC	Proximity sensor
CE000939	CEBN-310-XCDR-05-S16-V350-24HR	DIN 43650	24V DC	Proximity sensor

Revision E

SOLENOID OPERATED CARTRIDGE

CEBN-060-XADR-06

POPPET TYPE
PROXIMITY SENSOR

ATLANTIC Fluid Tech
WWW.SUMY.IR

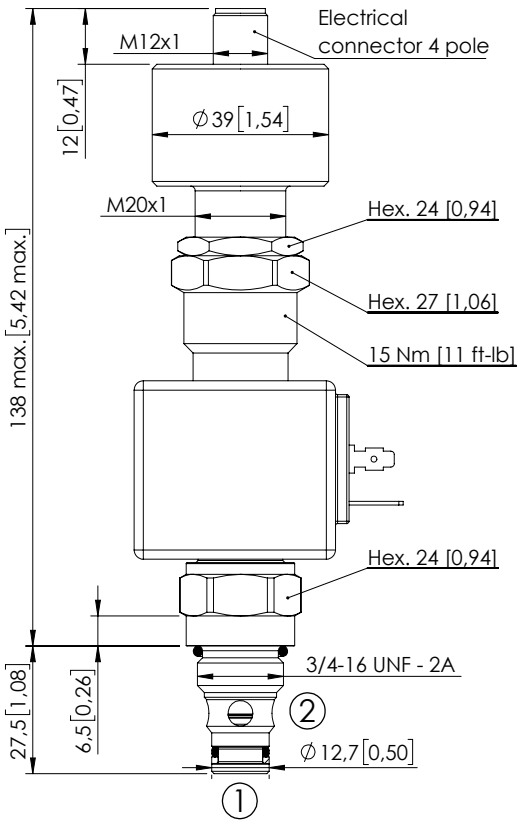

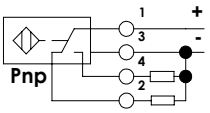

Dimensions: mm [inches]

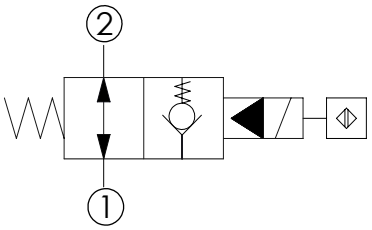

SPECIFICATIONS

Max. operating pressure:	350 bar (5000 psi)
Rated flow:	60 l/min (16 gpm)
Cavity:	SAE-08-2N
Weight:	0,5 kg (0,33 lbs)
Min. voltage required:	90% of nominal
Coil type:	M7 type
Ambient temperature:	-20/+50 °C (-4/+122 °F)
Contamination class to ISO 4406:	See technical spec.
Seal kit:	RA100081
Installation torque:	45 - 50 Nm (33 - 37 ft-lb)
MTTFd:	150 - 1200 years: See technical spec.
Operating temperature:	-25/+80°C (-13/+176 °F)

NOTES

For other configurations/quick codes not available in this catalogue page please consult factory

CURVES

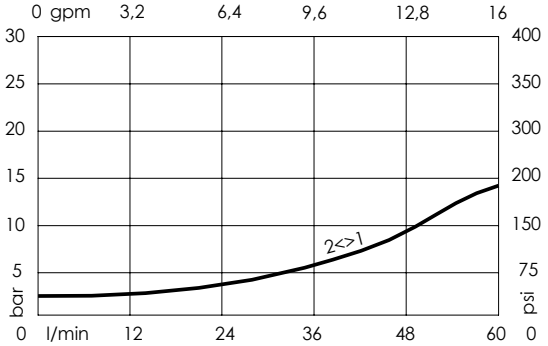

ORDERING CODES

Quick code	Description	Connector	Voltage	Options
CE001053	CEBN-060-XADR-06-S08-V350-12HR	DIN 43650	12V DC	Proximity sensor
CE000476	CEBN-060-XADR-06-S08-V350-24HR	DIN 43650	24V DC	Proximity sensor

Revision A1

SOLENOID OPERATED CARTRIDGE

CEBN-080-XADR-06

POPPET TYPE
PROXIMITY SENSOR

ATLANTIC Fluid Tech
WWW.SUMY.IR

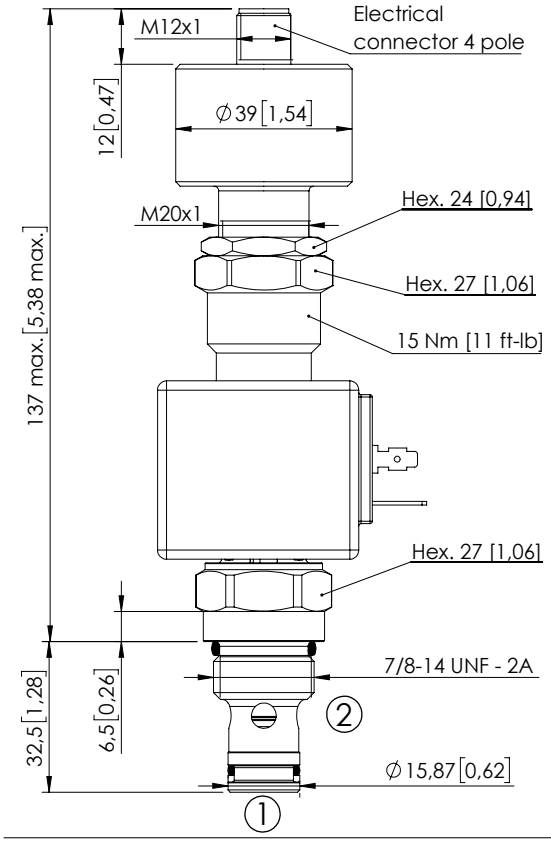

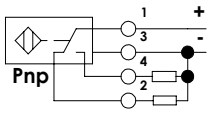

Dimensions: mm [inches]

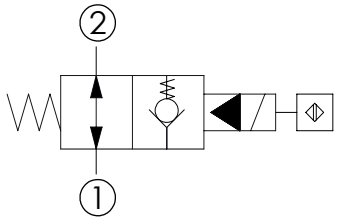

SPECIFICATIONS

Max. operating pressure:	350 bar (5000 psi)
Rated flow:	80 l/min (21 gpm)
Cavity:	SAE-10-2N
Weight:	0,5 kg (0,33 lbs)
Min. voltage required:	90% of nominal
Coil type:	M7 type
Ambient temperature:	-20/+50 °C (-4/+122 °F)
Contamination class to ISO 4406:	See technical spec.
Seal kit:	RA100082
Installation torque:	55 - 62 Nm (41 - 46 ft-lb)
MTTFd:	150 - 1200 years: See technical spec.
Operating temperature:	-25/+80°C (-13/+176 °F)

NOTES

For other configurations/quick codes not available in this catalogue page please consult factory

CURVES

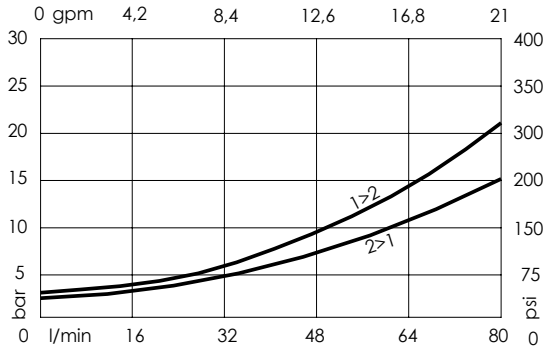

ORDERING CODES

Quick code	Description	Connector	Voltage	Options
CE001043	CEBN-080-XADR-06-S10-V350-12HR	DIN 43650	12V DC	Proximity sensor
CE001065	CEBN-080-XADR-06-S10-V350-24HR	DIN 43650	24V DC	Proximity sensor

Revision A1

SOLENOID OPERATED CARTRIDGE

CEBN-190-XADR-06

POPPET TYPE
PROXIMITY SENSOR

ATLANTIC Fluid Tech
WWW.SUMY.IR

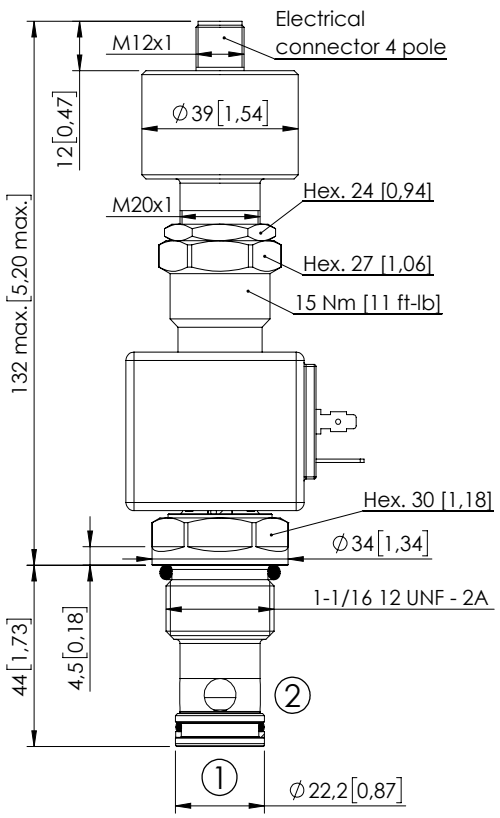

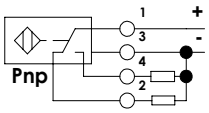

Dimensions: mm [inches]

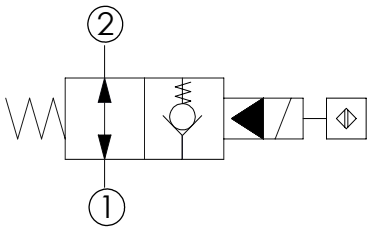

SPECIFICATIONS

Max. operating pressure:	350 bar (5000 psi)
Rated flow:	190 l/min (50 gpm)
Cavity:	SAE-12-2N
Weight:	0,61 kg (1,32 lbs)
Min. voltage required:	90% of nominal
Coil type:	M7 type
Ambient temperature:	-20/+50 °C (-4/+122 °F)
Contamination class to ISO 4406:	See technical spec.
Seal kit:	RA100083
Installation torque:	135 - 150 Nm (100 - 111 ft-lb)
MTTFd:	150 - 1200 years: See technical spec.
Operating temperature:	-25/+80°C (-13/+176 °F)

NOTES

For other configurations/quick codes not available in this catalogue page please consult factory

CURVES

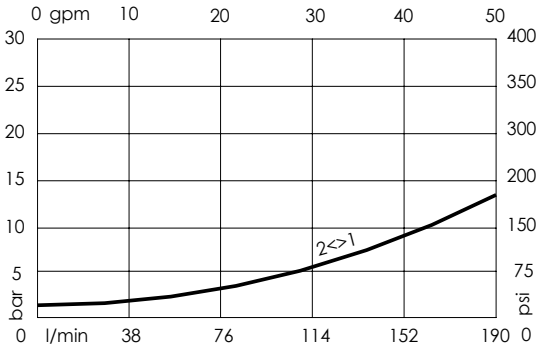

ORDERING CODES

Quick code	Description	Connector	Voltage	Options
CE001096	CEBN-190-XADR-06-S12-V350-12HR	DIN 43650	12V DC	Proximity sensor
CE001097	CEBN-190-XADR-06-S12-V350-24HR	DIN 43650	24V DC	Proximity sensor

Revision A1

SOLENOID OPERATED CARTRIDGE

CEBN-310-XADR-06

POPPET TYPE
PROXIMITY SENSOR

ATLANTIC Fluid Tech
WWW.SUMY.IR

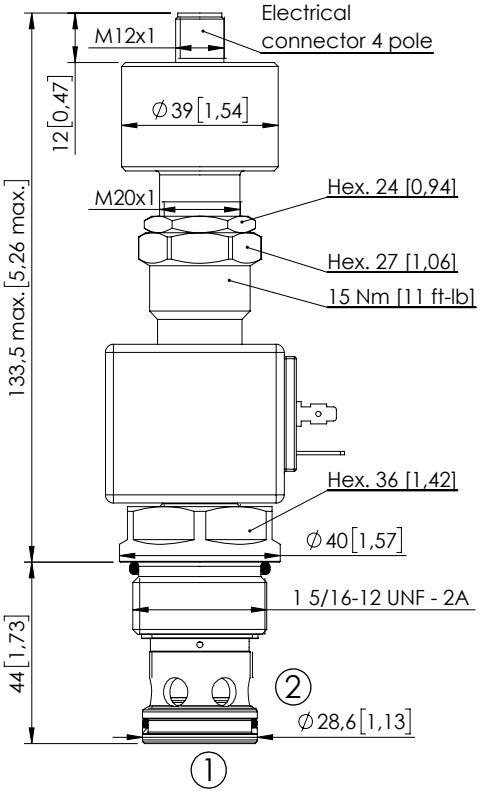

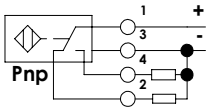

Dimensions: mm [inches]

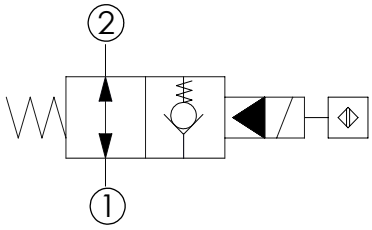

SPECIFICATIONS

Max. operating pressure:	350 bar (5000 psi)
Rated flow:	310 l/min (82 gpm)
Cavity:	SAE-16-2N
Weight:	0,7 kg (1,54 lbs)
Min. voltage required:	90% of nominal
Coil type:	M7 type
Ambient temperature:	-20/+50 °C (-4/+122 °F)
Contamination class to ISO 4406:	See technical spec.
Seal kit:	RA100084
Installation torque:	200 - 210 Nm (148 - 155 ft-lb)
MTTFd:	150 - 1200 years: See technical spec.
Operating temperature:	-25/+80°C (-13/+176 °F)

NOTES

For other configurations/quick codes not available in this catalogue page please consult factory

CURVES

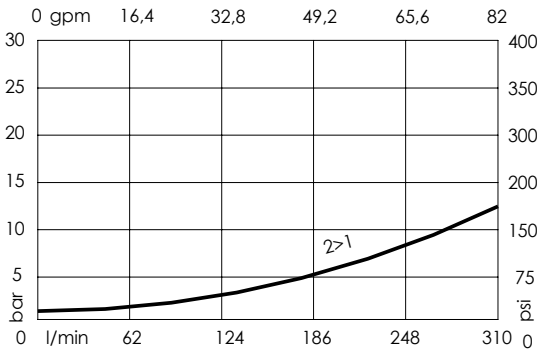

ORDERING CODES

Quick code	Description	Connector	Voltage	Options
CE001044	CEBN-310-XADR-06-S16-V350-12HR	DIN 43650	12V DC	Proximity sensor
CE001066	CEBN-310-XADR-06-S16-V350-24HR	DIN 43650	24V DC	Proximity sensor

Revision A1

SOLENOID OPERATED CARTRIDGE

CEBN-060-XCDR-31

POPPET TYPE
PROXIMITY SENSOR

ATLANTIC Fluid Tech
WWW.SUMY.IR

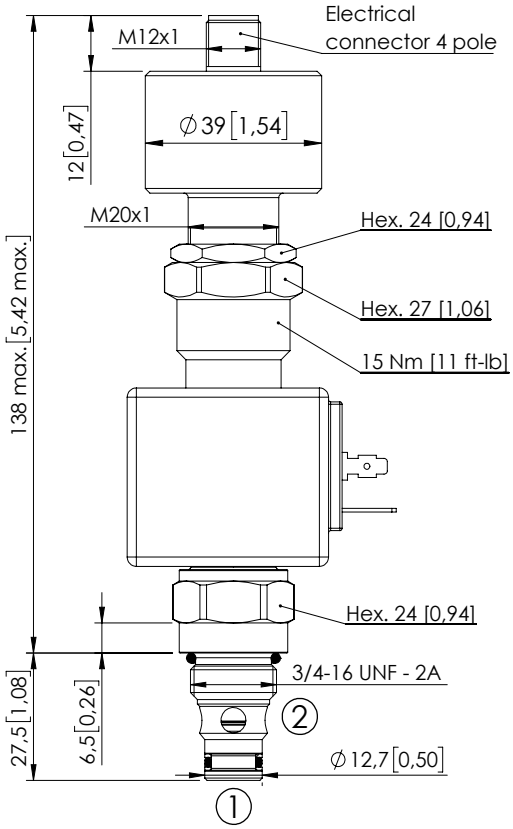

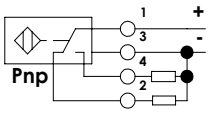

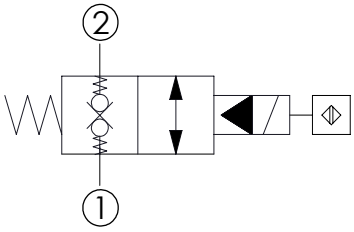

Dimensions: mm [inches]

SPECIFICATIONS

Max. operating pressure:	350 bar (5000 psi)
Rated flow:	60 l/min (16 gpm)
Cavity:	SAE-08-2N
Weight:	0,51 kg (0,33 lbs)
Min. voltage required:	90% of nominal
Coil type:	M7 type
Ambient temperature:	-20/+50 °C (-4/+122 °F)
Contamination class to ISO 4406:	See technical spec.
Seal kit:	RB100081
Installation torque:	45 - 50 Nm (33 - 37 ft-lb)
MTTFd:	150 - 1200 years: See technical spec.
Operating temperature:	-25/+80°C (-13/+176 °F)

NOTES

For other configurations/quick codes not available in this catalogue page please consult factory

CURVES

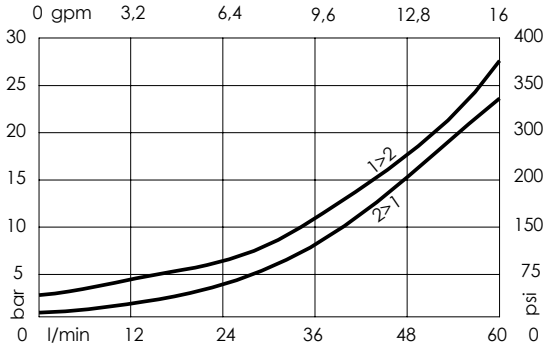

ORDERING CODES

Quick code	Description	Connector	Voltage	Options
CE001035	CEBN-060-XCDR-31-S08-V350-12HR	DIN 43650	12V DC	Proximity sensor
CE001064	CEBN-060-XCDR-31-S08-V350-24HR	DIN 43650	24V DC	Proximity sensor

Revision C

SOLENOID OPERATED CARTRIDGE

CEBN-080-XCDR-31

POPPET TYPE PROXIMITY SENSOR

ATLANTIC Fluid Tech
WWW.SUMY.IR

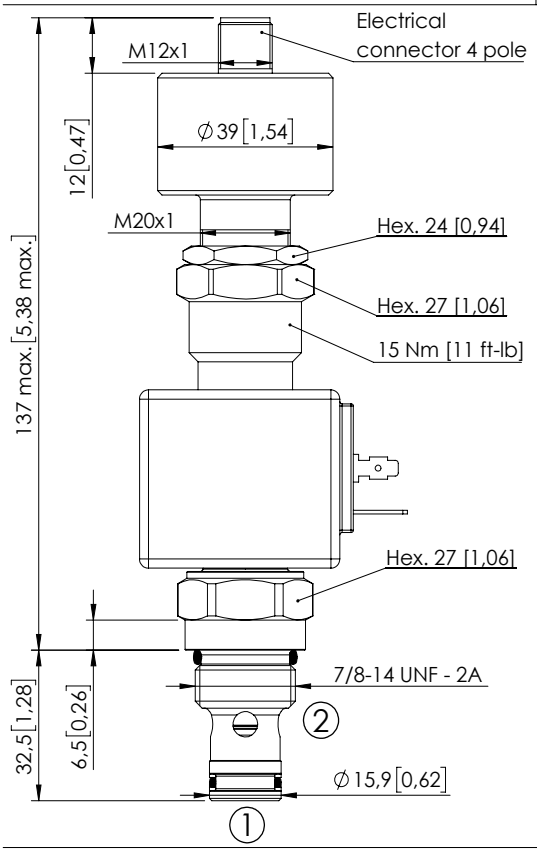

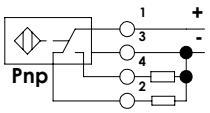

Dimensions: mm [inches]

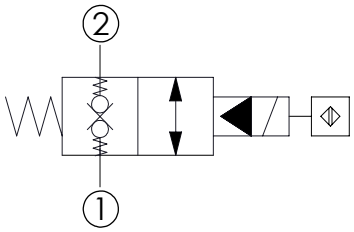

SPECIFICATIONS

Max. operating pressure:	350 bar (5000 psi)
Rated flow:	80 l/min (21 gpm)
Cavity:	SAE-10-2N
Weight:	0,54 kg (0,33 lbs)
Min. voltage required:	90% of nominal
Coil type:	M7 type
Ambient temperature:	-20/+50 °C (-4/+122 °F)
Contamination class to ISO 4406:	See technical spec.
Seal kit:	RB100082
Installation torque:	55 - 62 Nm (41 - 46 ft-lb)
MTTFd:	150 - 1200 years: See technical spec.
Operating temperature:	-25/+80°C (-13/+176 °F)

NOTES

For other configurations/quick codes not available in this catalogue page please consult factory

CURVES

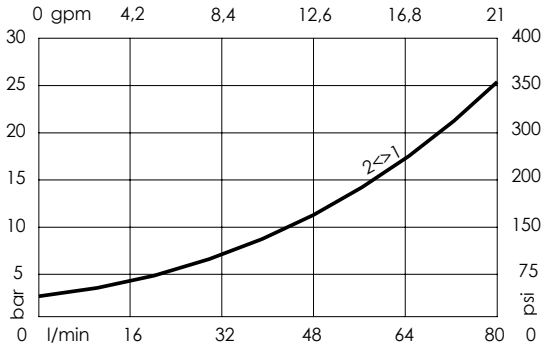

ORDERING CODES

Quick code	Description	Connector	Voltage	Options
CE001045	CEBN-080-XCDR-31-S10-V350-12HR	DIN 43650	12V DC	Proximity sensor
CE001067	CEBN-080-XCDR-31-S10-V350-24HR	DIN 43650	24V DC	Proximity sensor

Revision A1

SOLENOID OPERATED CARTRIDGE

CEBN-190-XCDR-31

POPPET TYPE
PROXIMITY SENSOR

ATLANTIC Fluid Tech
WWW.SUMY.IR

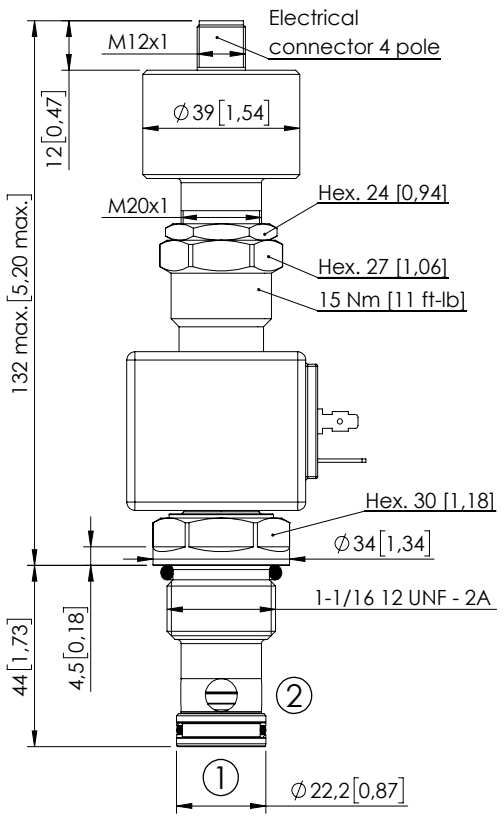

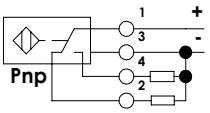

Dimensions: mm [inches]

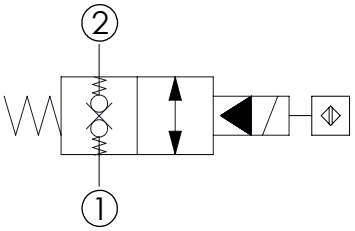

SPECIFICATIONS

Max. operating pressure:	350 bar (5000 psi)
Rated flow:	190 l/min (50 gpm)
Cavity:	SAE-12-2N
Weight:	0,61 kg (1,32 lbs)
Min. voltage required:	90% of nominal
Coil type:	M7 type
Ambient temperature:	-20/+50 °C (-4/+122 °F)
Contamination class to ISO 4406:	See technical spec.
Seal kit:	RB100083
Installation torque:	135 - 150 Nm (100 - 111 ft-lb)
MTTFd:	150 - 1200 years: See technical spec.
Operating temperature:	-25/+80°C (-13/+176 °F)

NOTES

For other configurations/quick codes not available in this catalogue page please consult factory

CURVES

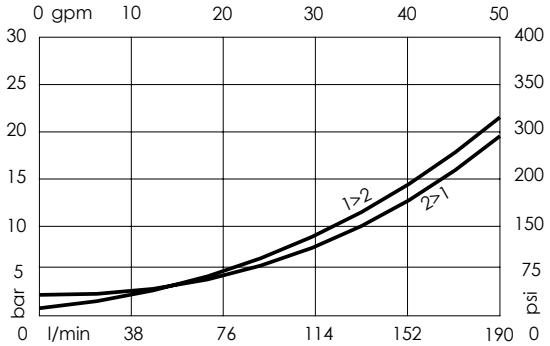

ORDERING CODES

Quick code	Description	Connector	Voltage	Options
CE001102	CEBN-190-XCDR-31-S12-V350-12HR	DIN 43650	12V DC	Proximity sensor
CE001103	CEBN-190-XCDR-31-S12-V350-24HR	DIN 43650	24V DC	Proximity sensor

Revision A1

SOLENOID OPERATED CARTRIDGE

CEBN-310-NCDR-31

POPPET TYPE
PROXIMITY SENSOR

ATLANTIC Fluid Tech
WWW.SUMY.IR

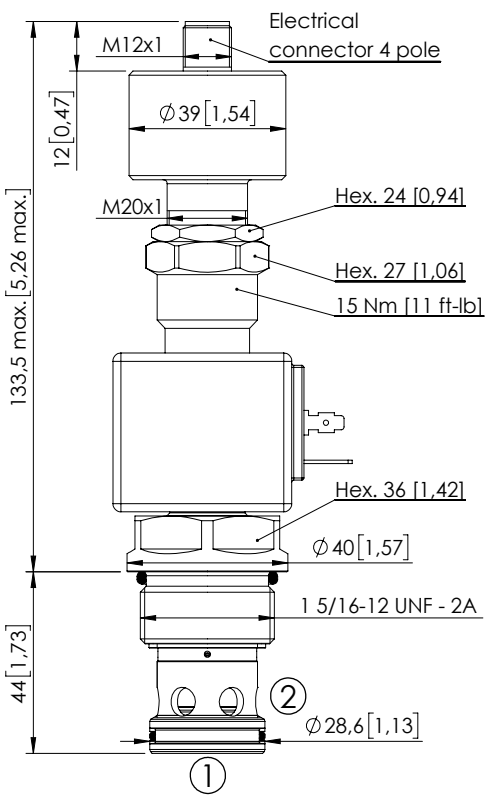

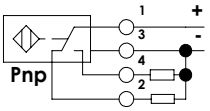

Dimensions: mm [inches]

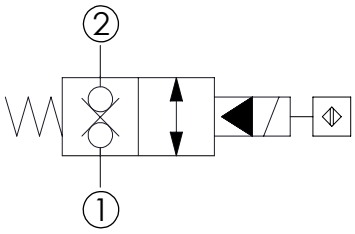

SPECIFICATIONS

Max. operating pressure:	350 bar (5000 psi)
Rated flow:	310 l/min (82 gpm)
Cavity:	SAE-16-2N
Weight:	0,7 kg (1,54 lbs)
Min. voltage required:	90% of nominal
Coil type:	M7 type
Ambient temperature:	-20/+50 °C (-4/+122 °F)
Contamination class to ISO 4406:	See technical spec.
Seal kit:	RB100084
Installation torque:	200 - 210 Nm (148 - 155 ft-lb)
MTTFd:	150 - 1200 years: See technical spec.
Operating temperature:	-25/+80°C (-13/+176 °F)

NOTES

For other configurations/quick codes not available in this catalogue page please consult factory

CURVES

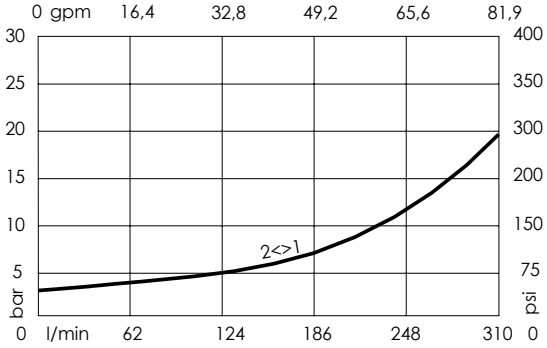

ORDERING CODES

Quick code	Description	Connector	Voltage	Options
CE001046	CEBN-310-NCDR-31-S16-V350-12HR	DIN 43650	12V DC	Proximity sensor
CE001068	CEBN-310-NCDR-31-S16-V350-24HR	DIN 43650	24V DC	Proximity sensor

Revision A1

SOLENOID OPERATED CARTRIDGE

CEBN-060-XADR-32

POPPET TYPE
PROXIMITY SENSOR

ATLANTIC Fluid Tech
WWW.SUMY.IR

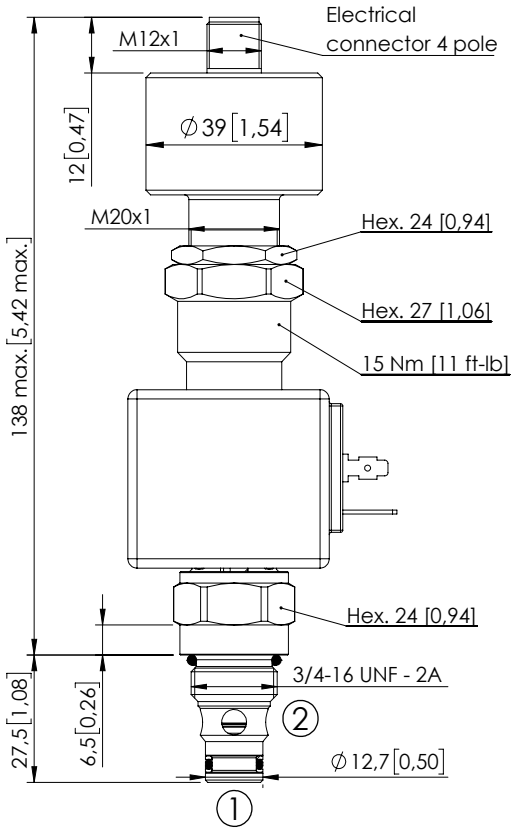

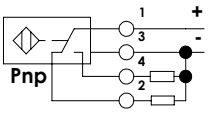

Dimensions: mm [inches]

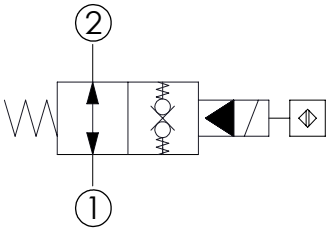

SPECIFICATIONS

Max. operating pressure:	350 bar (5000 psi)
Rated flow:	60 l/min (16 gpm)
Cavity:	SAE-08-2N
Weight:	0,51 kg (0,33 lbs)
Min. voltage required:	90% of nominal
Coil type:	M7 type
Ambient temperature:	-20/+50 °C (-4/+122 °F)
Contamination class to ISO 4406:	See technical spec.
Seal kit:	RB100081
Installation torque:	45 - 50 Nm (33 - 37 ft-lb)
MTTFd:	150 - 1200 years: See technical spec.
Operating temperature:	-25/+80°C (-13/+176 °F)

NOTES

For other configurations/quick codes not available in this catalogue page please consult factory

CURVES

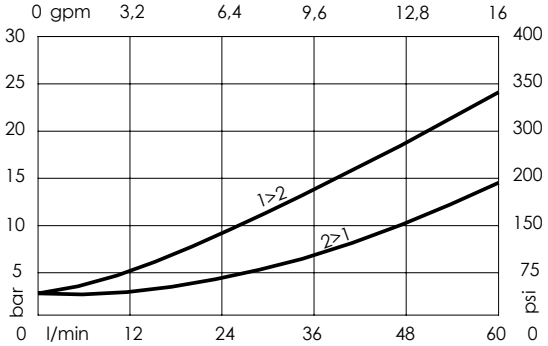

ORDERING CODES

Quick code	Description	Connector	Voltage	Options
CE001047	CEBN-060-XADR-32-S08-V350-12HR	DIN 43650	12V DC	Proximity sensor
CE001069	CEBN-060-XADR-32-S08-V350-24HR	DIN 43650	24V DC	Proximity sensor

Revision A1

SOLENOID OPERATED CARTRIDGE

CEBN-080-XADR-32

POPPET TYPE PROXIMITY SENSOR

ATLANTIC Fluid Tech
WWW.SUMY.IR

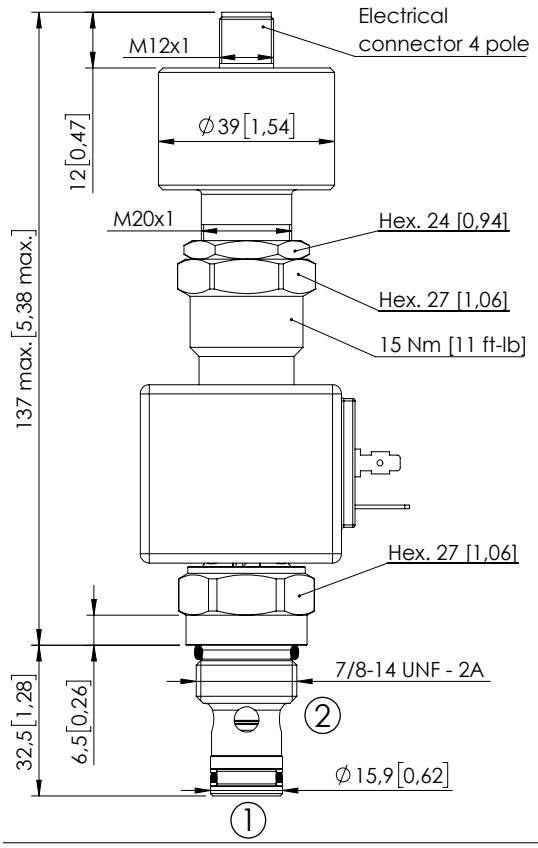

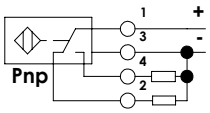

Dimensions: mm [inches]

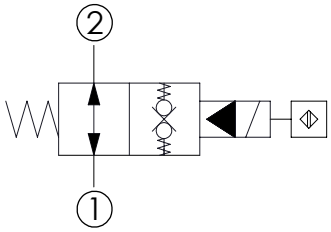

SPECIFICATIONS

Max. operating pressure:	350 bar (5000 psi)
Rated flow:	80 l/min (21 gpm)
Cavity:	SAE-10-2N
Weight:	0,54 kg (0,33 lbs)
Min. voltage required:	90% of nominal
Coil type:	M7 type
Ambient temperature:	-20/+50 °C (-4/+122 °F)
Contamination class to ISO 4406:	See technical spec.
Seal kit:	RB100082
Installation torque:	55 - 62 Nm (41 - 46 ft-lb)
MTTFd:	150 - 1200 years: See technical spec.
Operating temperature:	-25/+80°C (-13/+176 °F)

NOTES

For other configurations/quick codes not available in this catalogue page please consult factory

CURVES

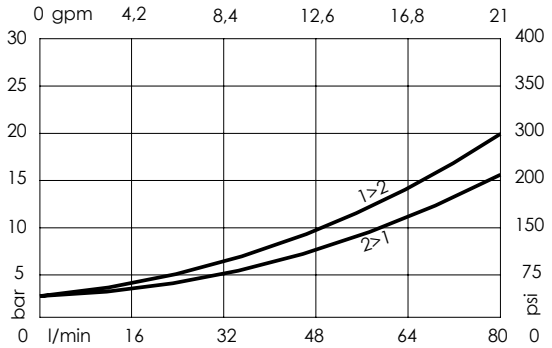

ORDERING CODES

Quick code	Description	Connector	Voltage	Options
CE001048	CEBN-080-XADR-32-S10-V350-12HR	DIN 43650	12V DC	Proximity sensor
CE001070	CEBN-080-XADR-32-S10-V350-24HR	DIN 43650	24V DC	Proximity sensor

Revision A1

SOLENOID OPERATED CARTRIDGE

CEBN-190-XADR-32

POPPET TYPE
PROXIMITY SENSOR

ATLANTIC Fluid Tech
WWW.SUMY.IR

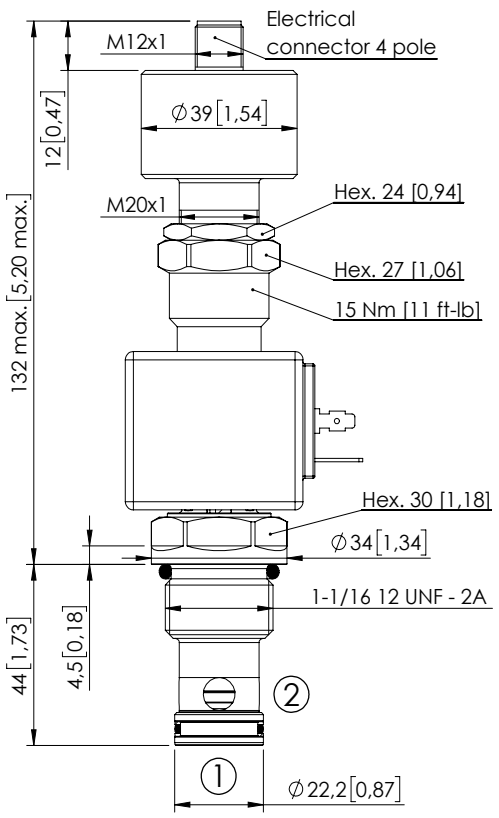

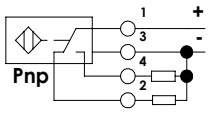

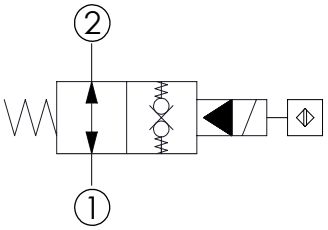

Dimensions: mm [inches]

SPECIFICATIONS

Max. operating pressure:	350 bar (5000 psi)
Rated flow:	190 l/min (50 gpm)
Cavity:	SAE-12-2N
Weight:	0,61 kg (1,32 lbs)
Min. voltage required:	90% of nominal
Coil type:	M7 type
Ambient temperature:	-20/+50 °C (-4/+122 °F)
Contamination class to ISO 4406:	See technical spec.
Seal kit:	RB100083
Installation torque:	135 - 150 Nm (100 - 111 ft-lb)
MTTFd:	150 - 1200 years: See technical spec.
Operating temperature:	-25/+80°C (-13/+176 °F)

NOTES

For other configurations/quick codes not available in this catalogue page please consult factory

CURVES

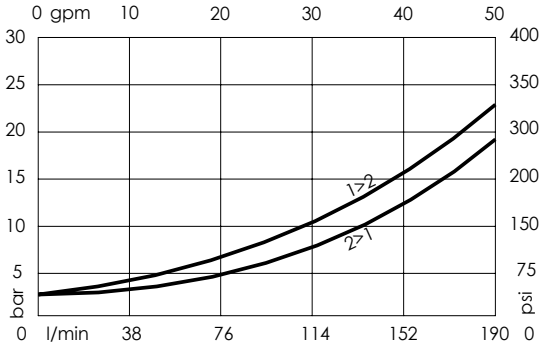

ORDERING CODES

Quick code	Description	Connector	Voltage	Options
CE001108	CEBN-190-XADR-32-S12-V350-12HR	DIN 43650	12V DC	Proximity sensor
CE001109	CEBN-190-XADR-32-S12-V350-24HR	DIN 43650	24V DC	Proximity sensor

Revision A1

SOLENOID OPERATED CARTRIDGE

CEBN-310-NADR-32

POPPET TYPE
PROXIMITY SENSOR

ATLANTIC Fluid Tech
WWW.SUMY.IR

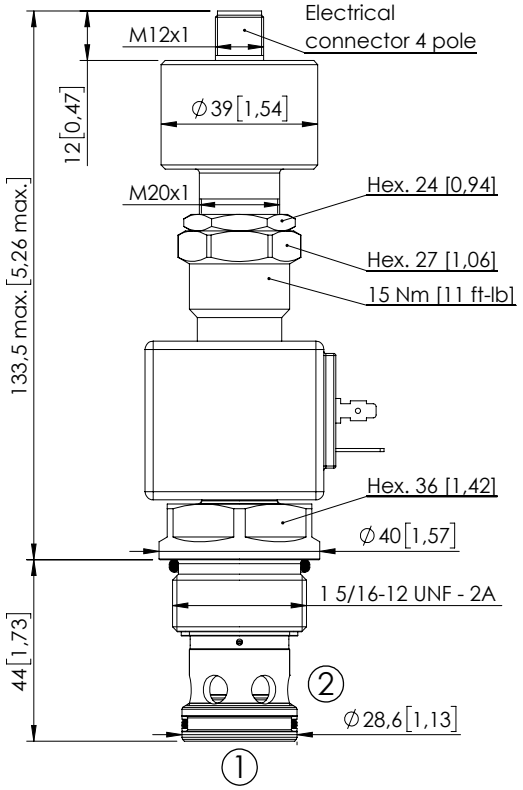

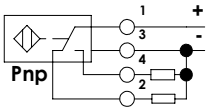

Dimensions: mm [inches]

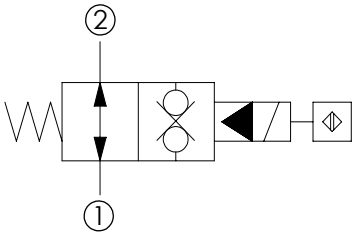

SPECIFICATIONS

Max. operating pressure:	350 bar (5000 psi)
Rated flow:	310 l/min (82 gpm)
Cavity:	SAE-16-2N
Weight:	0,73 kg (1,54 lbs)
Min. voltage required:	90% of nominal
Coil type:	M7 type
Ambient temperature:	-20/+50 °C (-4/+122 °F)
Contamination class to ISO 4406:	See technical spec.
Seal kit:	RB100084
Installation torque:	200 - 210 Nm (148 - 155 ft-lb)
MTTFd:	150 - 1200 years: See technical spec.
Operating temperature:	-25/+80°C (-13/+176 °F)

NOTES

For other configurations/quick codes not available in this catalogue page please consult factory

CURVES

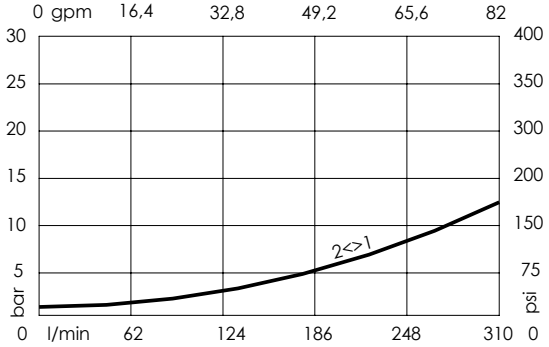

ORDERING CODES

Quick code	Description	Connector	Voltage	Options
CE001049	CEBN-310-NADR-32-S16-V350-12HR	DIN 43650	12V DC	Proximity sensor
CE001071	CEBN-310-NADR-32-S16-V350-24HR	DIN 43650	24V DC	Proximity sensor

Revision A1

SOLENOID OPERATED CARTRIDGE

CEBD-040-NAMV-97

DIRECT OPERATED
POPPET TYPE
POSITION SENSOR

ATLANTIC Fluid Tech
WWW.SUMY.IR

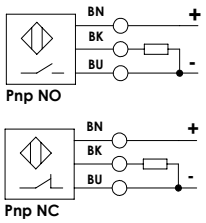

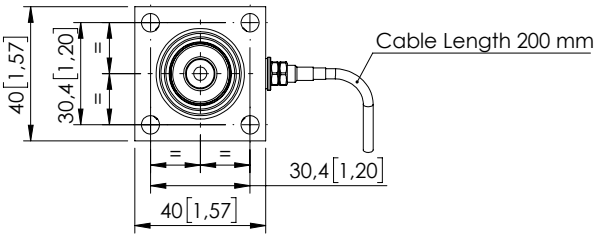

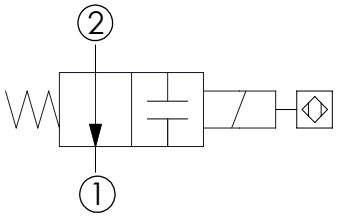

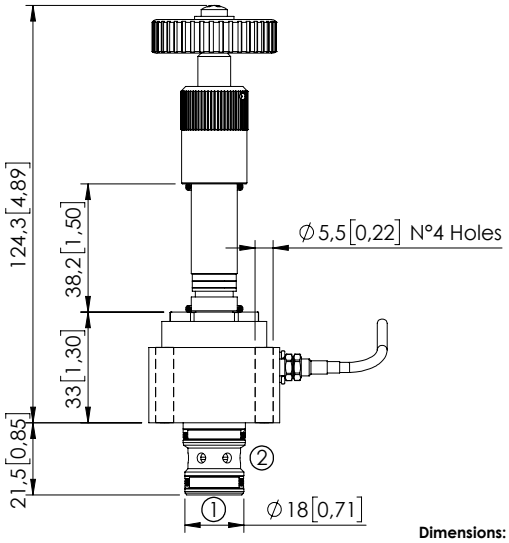

Dimensions: mm [inches]

SPECIFICATIONS

Max. operating pressure:	350 bar (5000 psi)
Max. operating pressure on port 1:	100 bar (1400 psi)
Rated flow:	40 l/min (11 gpm)
Cavity:	VP000338
Weight:	0,4 kg (0,88 lbs)
Min. voltage required:	90% of nominal
Coil type:	M7 or M3 type
Ambient temperature:	-20/+50 °C (-4/+122 °F)
Contamination class to ISO 4406:	See technical spec.
Seal kit:	RD700338
Installation torque:	5 Nm (4 ft-lb)
MTTFd:	150 - 1200 years: See technical spec.

NOTES

To be mounted with M5x30 [M5x1,18] screws

For other configurations/quick codes not available in this catalogue page please consult factory

CURVES

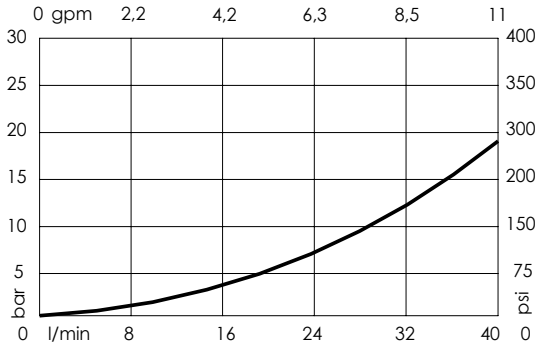

ORDERING CODES

Quick code	Description	Sensor type	Max operating pressure	
CE000818	CEBD-040-NAMV-97-338-N350	Valve not energized Sensor open (PNP-NO)	350 bar (5000 psi)	
CE000819	CEBD-040-NACV-97-338-N350	Valve not energized Sensor closed (PNP-NC)	350 bar (5000 psi)	

Revision B1

SOLENOID OPERATED CARTRIDGE

CEBT-350-NCFN-98

PILOTED OPERATED
SPOOL TYPE

ATLANTIC Fluid Tech
WWW.SUMY.IR

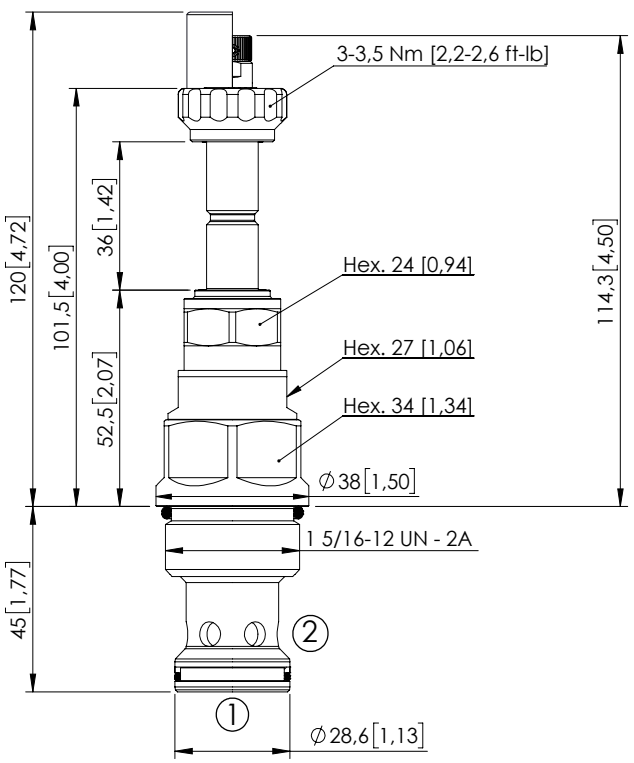

Dimensions: mm [inches]

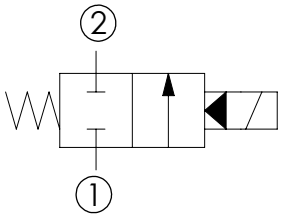

SPECIFICATIONS

Max. operating pressure:	350 bar (5000 psi)
Rated flow:	350 l/min (92 gpm)
Cavity:	SAE-16-2N
Weight:	0,5 kg (1,10 lbs)
Min. voltage required:	90% of nominal
Coil type:	M7 or M3 type
Ambient temperature:	-20/+50 °C (-4/+122 °F)
Contamination class to ISO 4406:	See technical spec.
Seal kit:	RA900084
Installation torque:	200 - 210 Nm (148 - 155 ft-lb)
MTTFd:	150 - 1200 years: See technical spec.
Max. int. leakage:	350 cm³/min (@46 cSt) 21,3 in³/min (@46 cSt)

NOTES

For other configurations/quick codes not available in this catalogue page please consult factory

OPTIONS

Standard

Knob style override

SEALING CAP

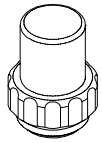

Ordering code:
AT000113

CURVES

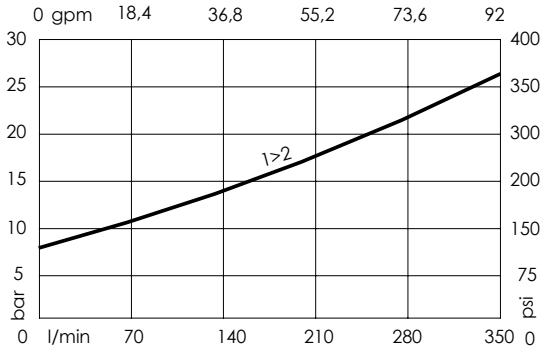

ORDERING CODES

Quick code	Description	Options	Max operating pressure	
CE000913	CEBT-350-NCFN-98-S16-N350	Standard	350 bar (5000 psi)	
CE000914	CEBT-350-NCFE-98-S16-N350	Knob style override	350 bar (5000 psi)	

Revision A1

SOLENOID OPERATED CARTRIDGE

CEBT-600-NCFN-98

PILOTED OPERATED
SPOOL TYPE

ATLANTIC Fluid Tech
WWW.SUMY.IR

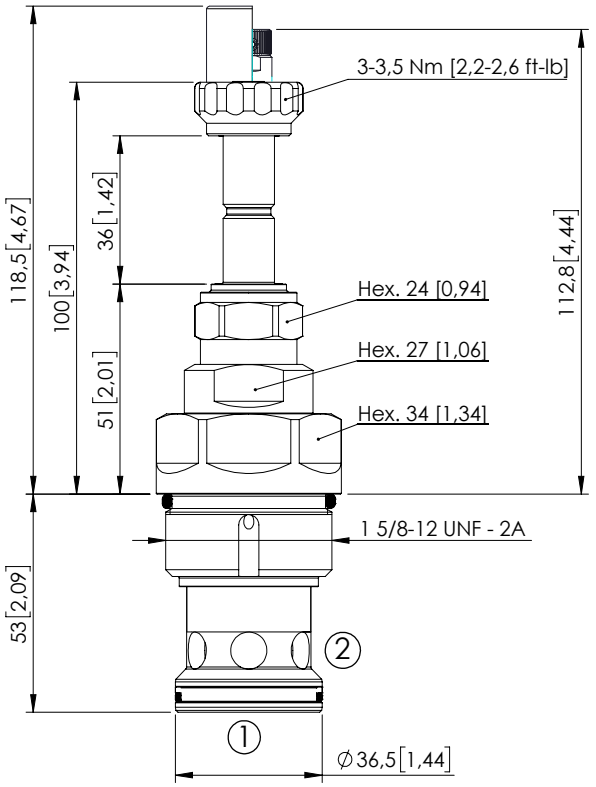

Dimensions: mm [inches]

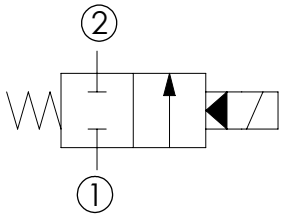

SPECIFICATIONS

Max. operating pressure:	350 bar (5000 psi)
Rated flow:	600 l/min (158 gpm)
Cavity:	SAE-20-2N
Weight:	0,7 kg (1,54 lbs)
Min. voltage required:	90% of nominal
Coil type:	M7 or M3 type
Ambient temperature:	-20/+50 °C (-4/+122 °F)
Contamination class to ISO 4406:	See technical spec.
Seal kit:	RA900085
Installation torque:	140 - 150 Nm (103 - 110 ft-lb)
MTTFd:	150 - 1200 years: See technical spec.
Max. int. leakage:	400 cm³/min (@46 cSt) 24,4 in³/min (@46 cSt)

NOTES

For other configurations/quick codes not available in this catalogue page please consult factory

OPTIONS

Standard

Knob style override

SEALING CAP

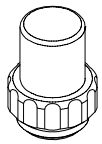

Ordering code:
AT000113

CURVES

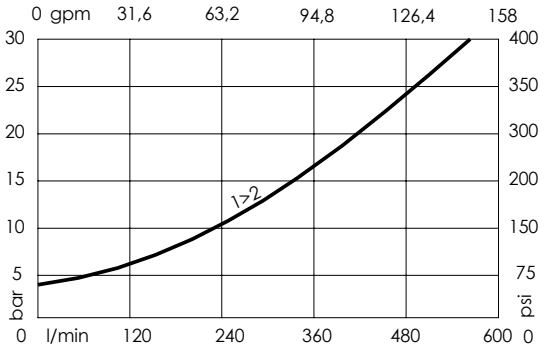

ORDERING CODES

Quick code	Description	Options	Max operating pressure	
CE000763	CEBT-600-NCFN-98-S20-N350	Standard	350 bar (5000 psi)	
CE000764	CEBT-600-NCFK-98-S20-N350	Knob style override	350 bar (5000 psi)	

Revision A1

SOLENOID OPERATED CARTRIDGE

CEBT-350-NAFN-99

PILOTED OPERATED
SPOOL TYPE

ATLANTIC Fluid Tech
WWW.SUMY.IR

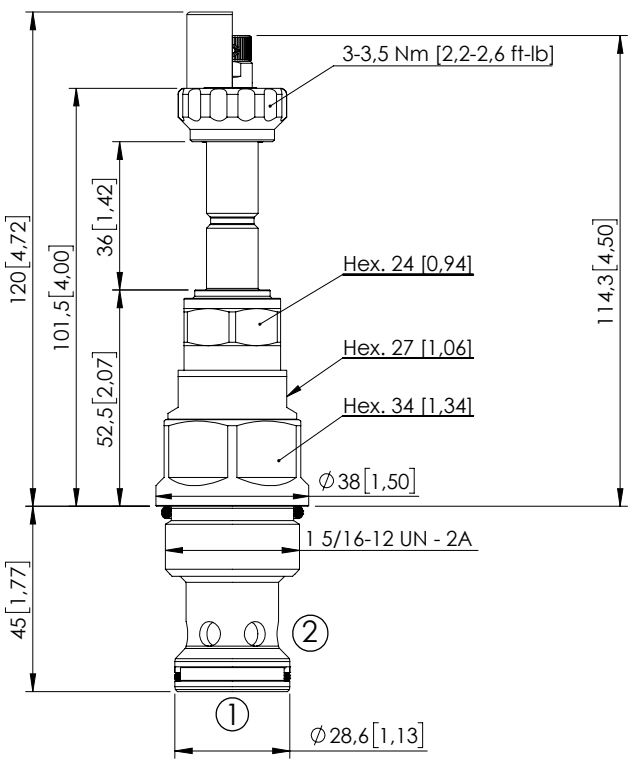

Dimensions: mm [inches]

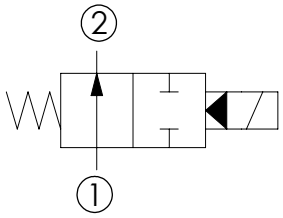

SPECIFICATIONS

Max. operating pressure:	350 bar (5000 psi)
Rated flow:	350 l/min (92 gpm)
Cavity:	SAE-16-2N
Weight:	0,5 kg (1,10 lbs)
Min. voltage required:	90% of nominal
Coil type:	M7 or M3 type
Ambient temperature:	-20/+50 °C (-4/+122 °F)
Contamination class to ISO 4406:	See technical spec.
Seal kit:	RA900084
Installation torque:	200 - 210 Nm (148 - 155 ft-lb)
MTTFd:	150 - 1200 years: See technical spec.
Max. int. leakage:	350 cm³/min (@46 cSt) 21,3 in³/min (@46 cSt)

NOTES

For other configurations/quick codes not available in this catalogue page please consult factory

OPTIONS

Standard

Knob style override

SEALING CAP

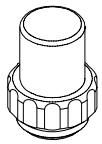

Ordering code:
AT000113

CURVES

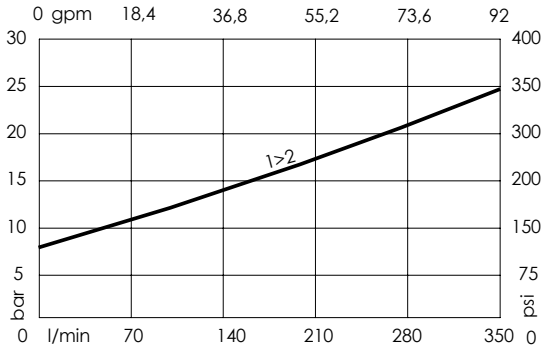

ORDERING CODES

Quick code	Description	Options	Max operating pressure	
CE000861	CEBT-350-NAFN-99-S16-N350	Standard	350 bar (5000 psi)	
CE000888	CEBT-350-NAFE-99-S16-N350	Knob style override	350 bar (5000 psi)	

Revision A1

SOLENOID OPERATED CARTRIDGE

CEBT-600-NAFN-99

PILOTED OPERATED SPOOL TYPE

ATLANTIC Fluid Tech
WWW.SUMY.IR

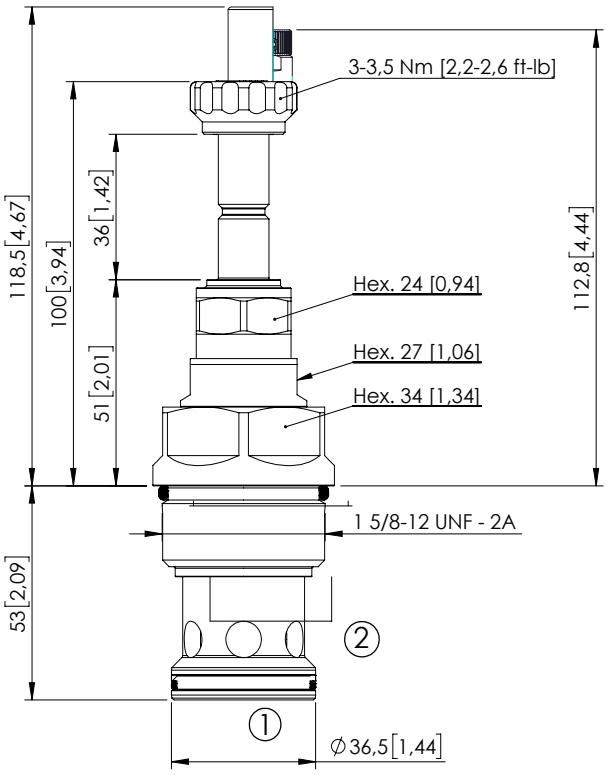

Dimensions: mm [inches]

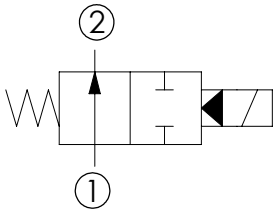

SPECIFICATIONS

Max. operating pressure:	350 bar (5000 psi)
Rated flow:	600 l/min (158 gpm)
Cavity:	SAE-20-2N
Weight:	0,7 kg (1,54 lbs)
Min. voltage required:	90% of nominal
Coil type:	M7 or M3 type
Ambient temperature:	-20/+50 °C (-4/+122 °F)
Contamination class to ISO 4406:	See technical spec.
Seal kit:	RA900085
Installation torque:	140 - 150 Nm (103 - 110 ft-lb)
MTTFd:	150 - 1200 years: See technical spec.
Max. int. leakage:	400 cm³/min (@46 cSt) 24,4 in³/min (@46 cSt)

NOTES

For other configurations/quick codes not available in this catalogue page please consult factory

OPTIONS

Standard

Knob style override

SEALING CAP

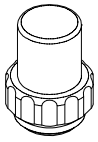

Ordering code:
AT000113

CURVES

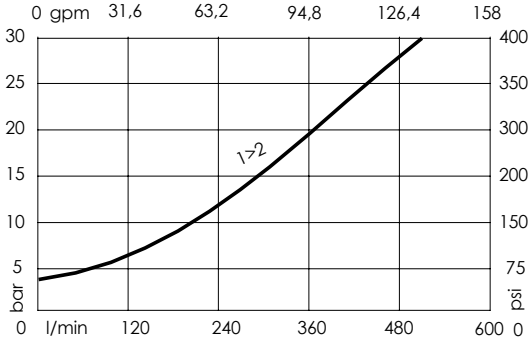

ORDERING CODES

Quick code	Description	Options	Max operating pressure	
CE000765	CEBT-600-NAFN-99-S20-N350	Standard	350 bar (5000 psi)	
CE000766	CEBT-600-NAFK-99-S20-N350	Knob style override	350 bar (5000 psi)	

Revision A1

SOLENOID OPERATED CARTRIDGE

CEBN-015-NCGN-01

HIGH PRESSURE
POPPET TYPE
FLANGED BODY

ATLANTIC Fluid Tech
WWW.SUMY.IR

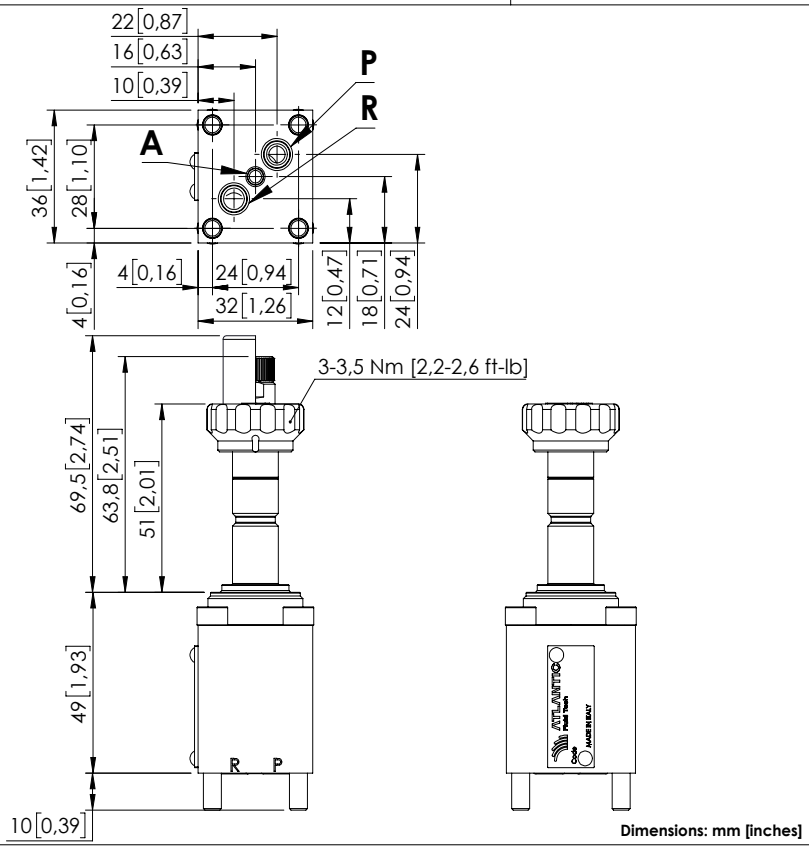

Dimensions: mm [inches]

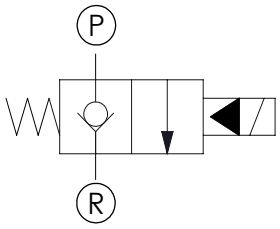

SPECIFICATIONS

Max. operating pressure:	600 bar (8700 psi)
Rated flow:	15 l/min (4 gpm)
Manifold:	Steel
Weight:	0,44 kg (0,97 lbs)
Min. voltage required:	90% of nominal
Coil type:	M7 or M3 type
Ambient temperature:	-20/+50 °C (-4/+122 °F)
Contamination class to ISO 4406:	See technical spec.
Mounting screw torque:	6,5 Nm (5 ft-lb)
MTTFd:	150 - 1200 years: See technical spec.

NOTES

For other configurations/quick codes not available in this catalogue page please consult factory

OPTIONS

Standard

Knob style override

SEALING CAP

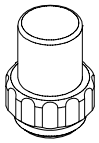

Ordering code:
AT000113

CURVES

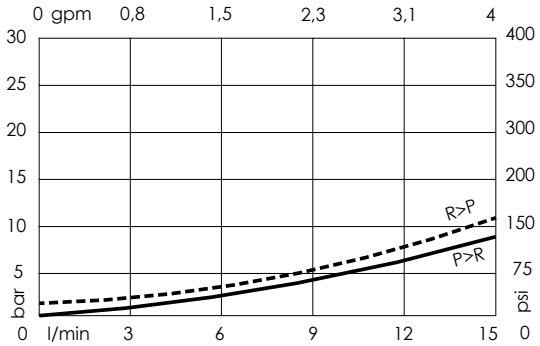

ORDERING CODES

Quick code	Description	Options	Ports size	
CE001077	CEBN-015-NCGN-01-F45-N600	Standard	R,P: Ø4,5 [0,18] A: Ø3 [0,12]	
CE001080	CEBN-015-NCGK-01-F45-N600	Knob style override	R,P: Ø4,5 [0,18] A: Ø3 [0,12]	

Revision D1

SOLENOID OPERATED CARTRIDGE

CEBN-025-NCGN-01

HIGH PRESSURE
POPPET TYPE
FLANGED BODY

ATLANTIC Fluid Tech
WWW.SUMY.IR

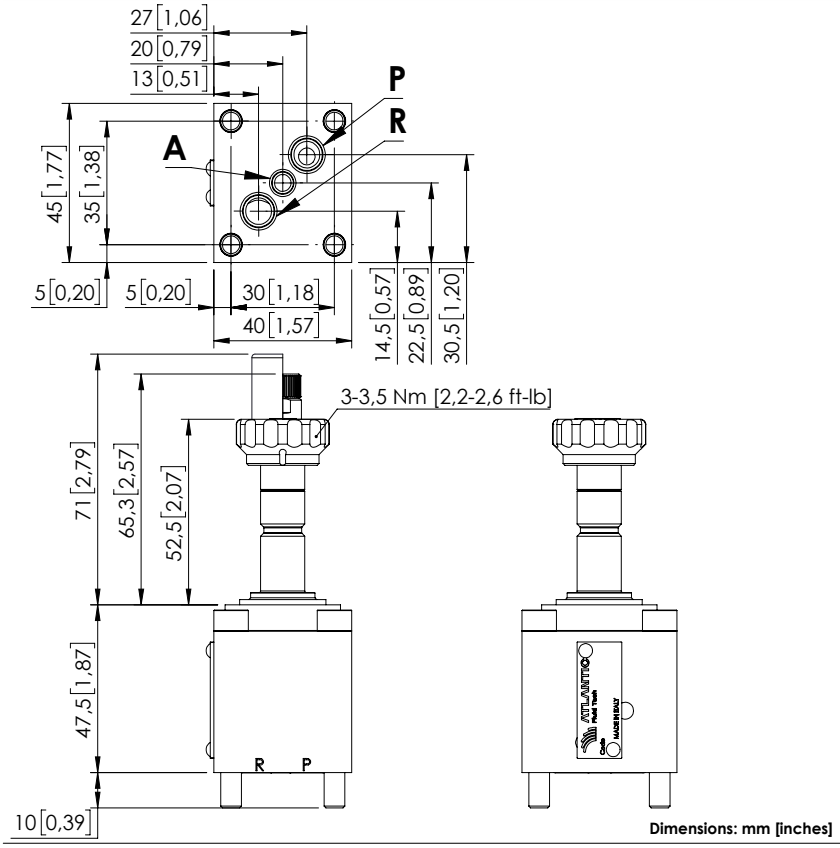

Dimensions: mm [inches]

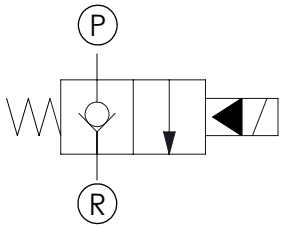

SPECIFICATIONS

Max. operating pressure:	600 bar (8700 psi)
Rated flow:	25 l/min (7 gpm)
Manifold:	Steel
Weight:	0,66 kg (1,45 lbs)
Min. voltage required:	90% of nominal
Coil type:	M7 or M3 type
Ambient temperature:	-20/+50 °C (-4/+122 °F)
Contamination class to ISO 4406:	See technical spec.
Mounting screw torque:	9,5 Nm (7 ft-lb)
MTTFd:	150 - 1200 years: See technical spec.

NOTES

For other configurations/quick codes not available in this catalogue page please consult factory

OPTIONS

Standard

Knob style override

SEALING CAP

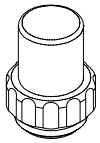

Ordering code:
AT000113

CURVES

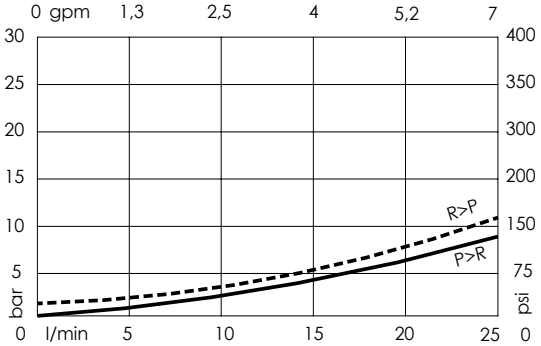

ORDERING CODES

Quick code	Description	Options	Ports size	
CE001078	CEBN-025-NCGN-01-F45-N600	Standard	R,P: Ø7,5 [0,30] A: Ø4,5 [0,18]	
CE001081	CEBN-025-NCGK-01-F45-N600	Knob style override	R,P: Ø7,5 [0,30] A: Ø4,5 [0,18]	

Revision D1

SOLENOID OPERATED CARTRIDGE

CEBN-060-NCGN-01

HIGH PRESSURE
POPPET TYPE
FLANGED BODY

ATLANTIC Fluid Tech
WWW.SUMY.IR

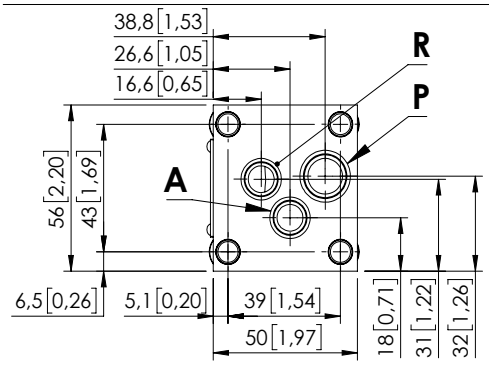

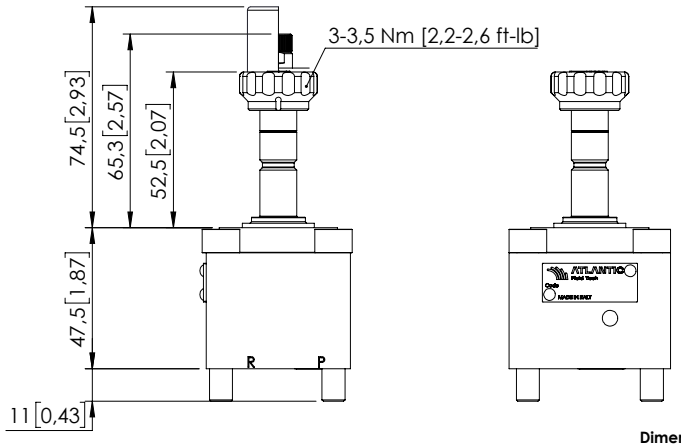

Dimensions: mm [inches]

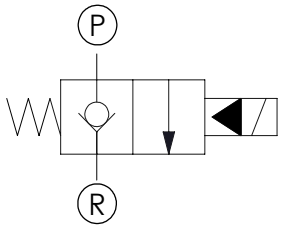

SPECIFICATIONS

Max. operating pressure:	600 bar (8700 psi)
Rated flow:	60 l/min (16 gpm)
Manifold:	Steel
Weight:	0,99 kg (2,20 lbs)
Min. voltage required:	90% of nominal
Coil type:	M7 or M3 type
Ambient temperature:	-20/+50 °C (-4/+122 °F)
Contamination class to ISO 4406:	See technical spec.
Mounting screw torque:	23 Nm (17 ft-lb)
MTTFd:	150 - 1200 years: See technical spec.

NOTES

For other configurations/quick codes not available in this catalogue page please consult factory

OPTIONS

Standard

Knob style override

SEALING CAP

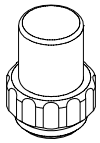

Ordering code:
AT000113

CURVES

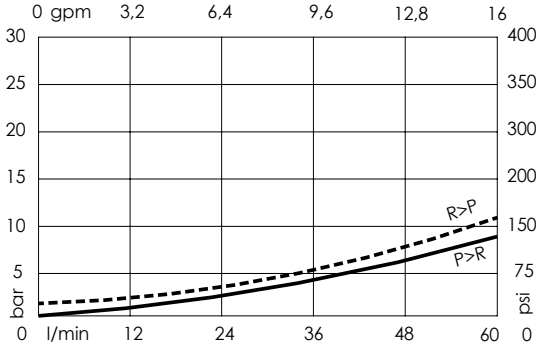

ORDERING CODES

Quick code	Description	Options	Ports size	
CE001079	CEBN-060-NCGN-01-F45-N600	Standard	R,P: Ø9 [0,35] A: Ø9 [0,35]	
CE001082	CEBN-060-NCGK-01-F45-N600	Knob style override	R,P: Ø9 [0,35] A: Ø9 [0,35]	

Revision D1

SOLENOID OPERATED CARTRIDGE

CEBN-060-NCAN-123

PNEUMATIC OPERATED POPPET TYPE

ATLANTIC Fluid Tech
WWW.SUMY.IR

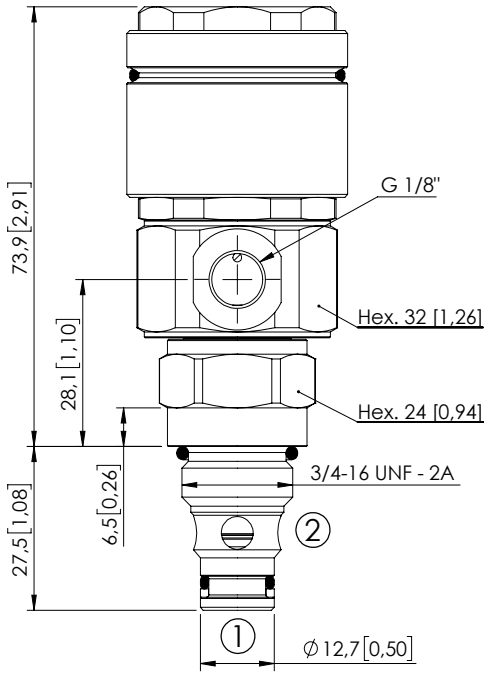

Dimensions: mm [inches]

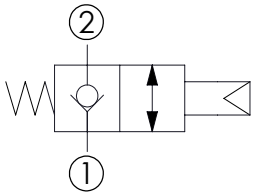

SPECIFICATIONS

Max. operating pressure:	350 bar (5000 psi)
Rated flow:	60 l/min (16 gpm)
Cavity:	SAE-08-2N
Weight:	0,31 kg (0,68 lbs)
Contamination class to ISO 4406:	See technical spec.
Seal kit:	RA900081
Installation torque:	45 - 50 Nm (33 - 37 ft-lb)
MTTFd:	150 - 1200 years: See technical spec.

NOTES

Airbleed.

For other configurations/quick codes not available in this catalogue page please consult factory

CURVES

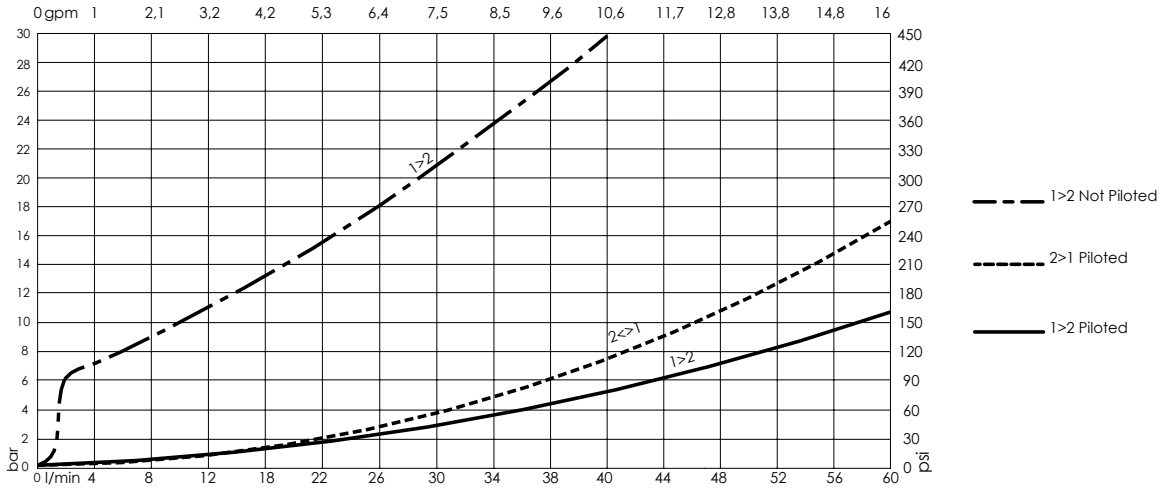

ORDERING CODES

Quick code	Description	Pneumatic pilot pressure		
CE000961	CEBN-060-NCAN-123-S08-N350	Min. 4 bar (Min.58 psi)	Max. 10 bar (Min.145 psi)	

Revision A1

SOLENOID OPERATED CARTRIDGE

CECS-015-SEFN-61

DIRECT OPERATED
SPOOL TYPE

ATLANTIC Fluid Tech
WWW.SUMY.IR

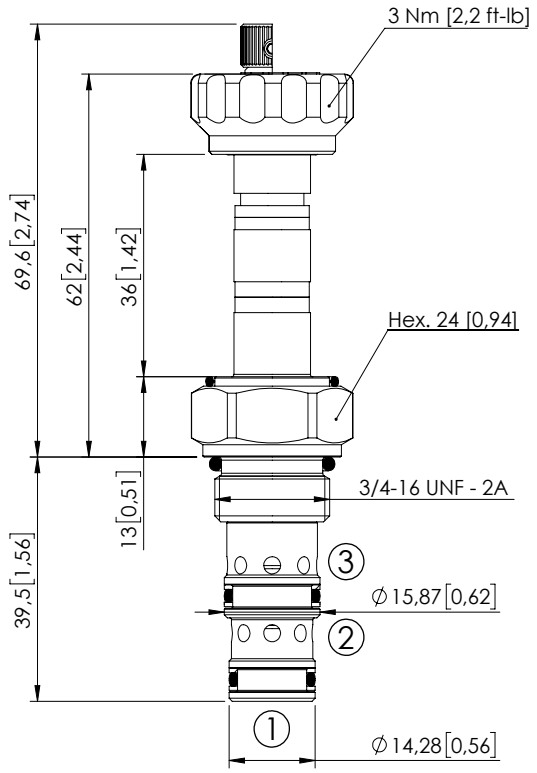

Dimensions: mm [inches]

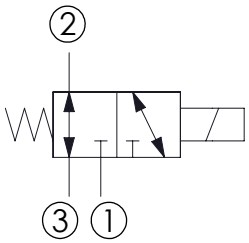

SPECIFICATIONS

Max. operating pressure:	350 bar (5000 psi)
Max. operating pressure on port 1:	280 bar (4000 psi)
Rated flow:	15 l/min (4 gpm)
Cavity:	SAE-08-3N
Weight:	0,14 kg (0,26 lbs)
Min. voltage required:	90% of nominal
Coil type:	M7 or M3 type
Ambient temperature:	-20/+50 °C (-4/+122 °F)
Contamination class to ISO 4406:	See technical spec.
Seal kit:	RB700091
Installation torque:	45 - 50 Nm (33 - 37 ft-lb)
MTTFd:	150 - 1200 years: See technical spec.
Leakage:	120 cm³/min (@46 cSt) 7,3 in³/min (@46 cSt)

NOTES

For other configurations/quick codes not available in this catalogue page please consult factory

OPTIONS

Standard	
Knob style override	

CURVES

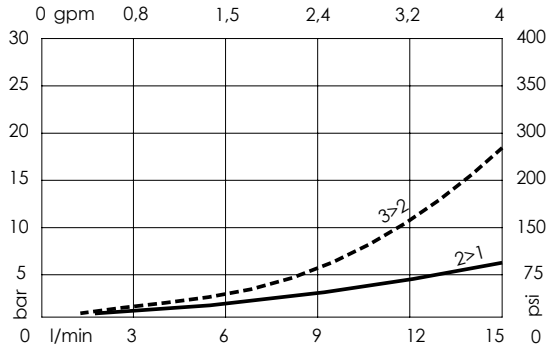

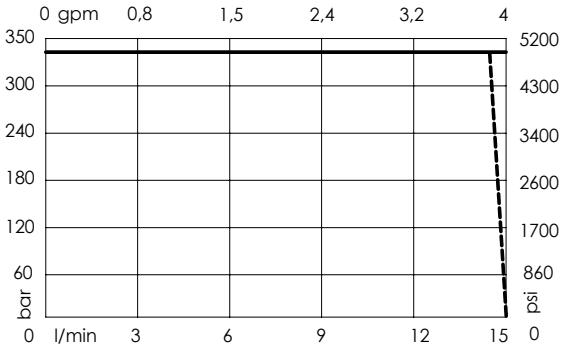

ORDERING CODES

Quick code	Description	Options	
CE000009	CECS-015-SEFN-61-S08-N350	Standard	
CE000066	CECS-015-SEFE-61-S08-N350	Knob style override	

Revision C

SOLENOID OPERATED CARTRIDGE

CECS-015-SEFN-62

DIRECT OPERATED
SPOOL TYPE

ATLANTIC Fluid Tech
WWW.SUMY.IR

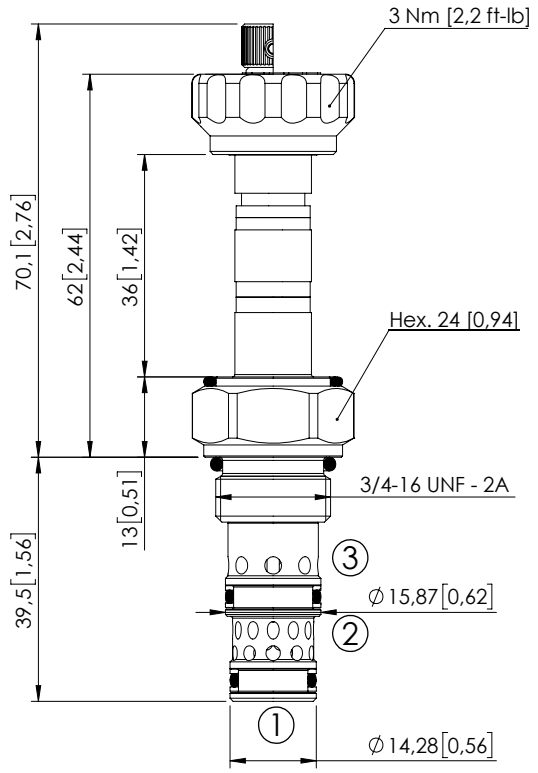

Dimensions: mm [inches]

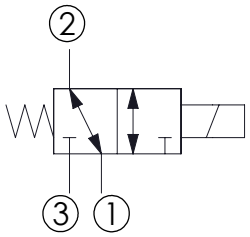

SPECIFICATIONS

Max. operating pressure:	350 bar (5000 psi)
Max. operating pressure on port 1:	280 bar (4000 psi)
Rated flow:	15 l/min (4 gpm)
Cavity:	SAE-08-3N
Weight:	0,14 kg (0,26 lbs)
Min. voltage required:	90% of nominal
Coil type:	M7 or M3 type
Ambient temperature:	-20/+50 °C (-4/+122 °F)
Contamination class to ISO 4406:	See technical spec.
Seal kit:	RB700091
Installation torque:	45 - 50 Nm (33 - 37 ft-lb)
MTTFd:	150 - 1200 years: See technical spec.
Leakage:	120 cm³/min (@46 cSt) 7,3 in³/min (@46 cSt)

NOTES

For other configurations/quick codes not available in this catalogue page please consult factory

OPTIONS

Standard	
Knob style override	

CURVES

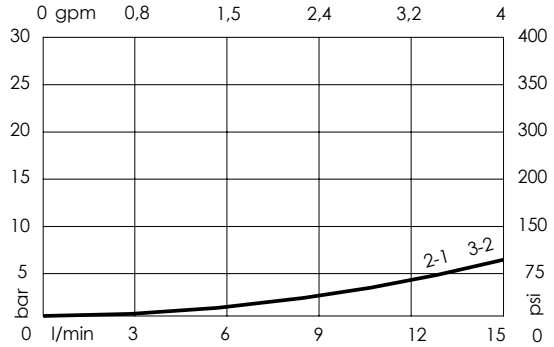

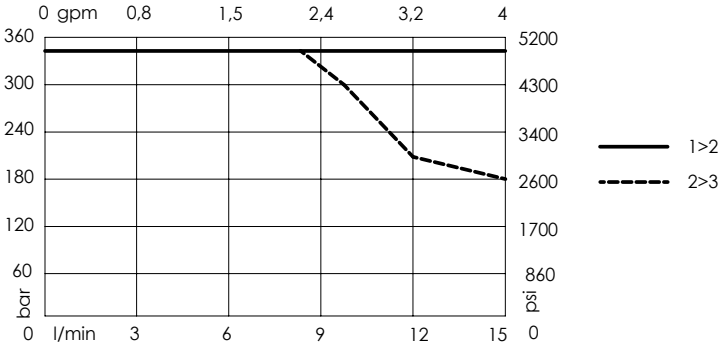

ORDERING CODES

Quick code	Description	Options	
CE000010	CECS-015-SEFN-62-S08-N350	Standard	
CE000067	CECS-015-SEFE-62-S08-N350	Knob style override	

Revision C

SOLENOID OPERATED CARTRIDGE

CECS-015-SEFN-63

DIRECT OPERATED
SPOOL TYPE

ATLANTIC Fluid Tech
WWW.SUMY.IR

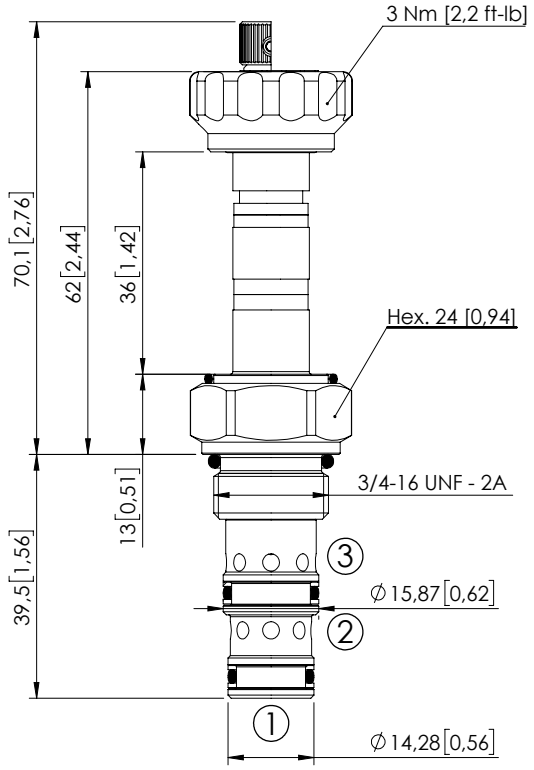

Dimensions: mm [inches]

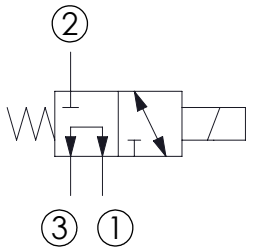

SPECIFICATIONS

Max. operating pressure:	350 bar (5000 psi)
Max. operating pressure on port 1:	280 bar (4000 psi)
Rated flow:	15 l/min (4 gpm)
Cavity:	SAE-08-3N
Weight:	0,14 kg (0,26 lbs)
Min. voltage required:	90% of nominal
Coil type:	M7 or M3 type
Ambient temperature:	-20/+50 °C (-4/+122 °F)
Contamination class to ISO 4406:	See technical spec.
Seal kit:	RB700091
Installation torque:	45 - 50 Nm (33 - 37 ft-lb)
MTTFd:	150 - 1200 years: See technical spec.
Leakage:	120 cm³/min (@46 cSt) 7,3 in³/min (@46 cSt)

NOTES

For other configurations/quick codes not available in this catalogue page please consult factory

OPTIONS

Standard	
Knob style override	

CURVES

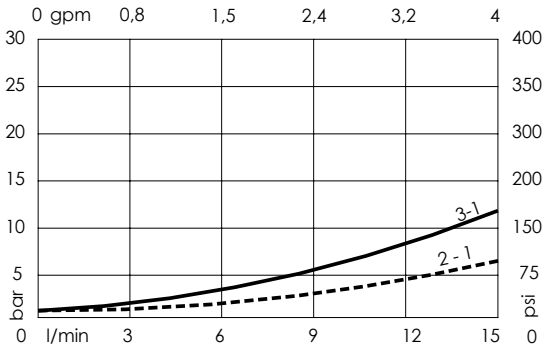

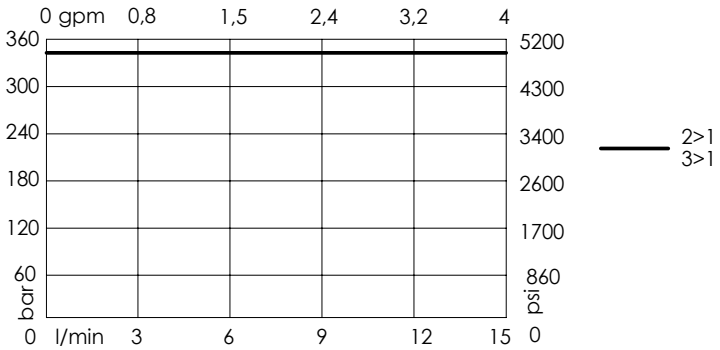

ORDERING CODES

Quick code	Description	Options	
CE000011	CECS-015-SEFN-63-S08-N350	Standard	
CE000068	CECS-015-SEFE-63-S08-N350	Knob style override	

Revision C

SOLENOID OPERATED CARTRIDGE

CECS-015-SEFN-64

DIRECT OPERATED
SPOOL TYPE

ATLANTIC Fluid Tech
WWW.SUMY.IR

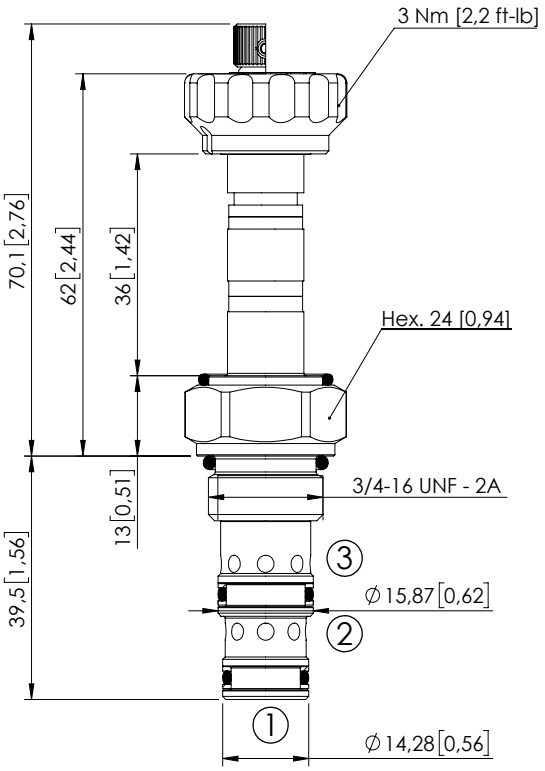

Dimensions: mm [inches]

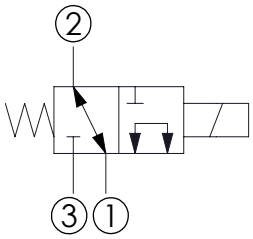

SPECIFICATIONS

Max. operating pressure:	350 bar (5000 psi)
Max. operating pressure on port 1:	280 bar (4000 psi)
Rated flow:	15 l/min (4 gpm)
Cavity:	SAE-08-3N
Weight:	0,14 kg (0,26 lbs)
Min. voltage required:	90% of nominal
Coil type:	M7 or M3 type
Ambient temperature:	-20/+50 °C (-4/+122 °F)
Contamination class to ISO 4406:	See technical spec.
Seal kit:	RB700091
Installation torque:	45 - 50 Nm (33 - 37 ft-lb)
MTTFd:	150 - 1200 years: See technical spec.
Leakage:	120 cm³/min (@46 cSt) 7,3 in³/min (@46 cSt)

NOTES

For other configurations/quick codes not available in this catalogue page please consult factory

OPTIONS

Standard	
Knob style override	

CURVES

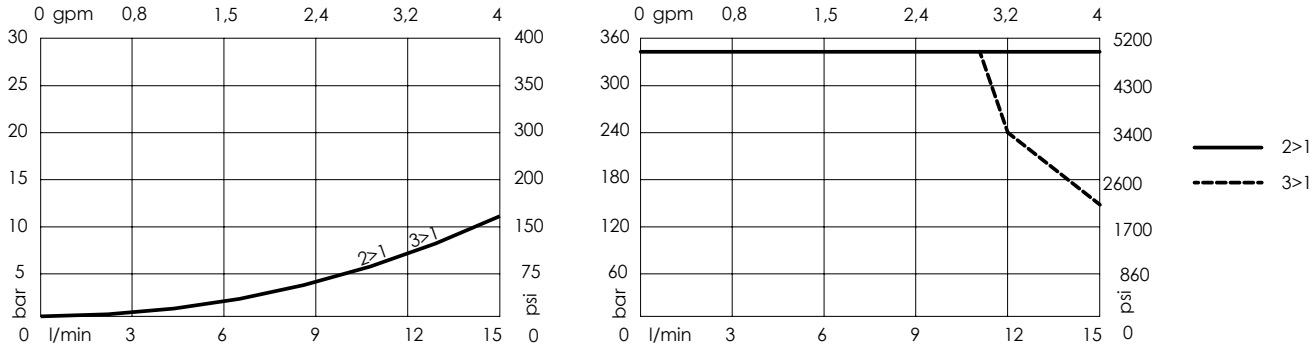

ORDERING CODES

Quick code	Description	Options	
CE000008	CECS-015-SEFN-64-S08-N350	Standard	
CE000070	CECS-015-SEFE-64-S08-N350	Knob style override	

Revision C

SOLENOID OPERATED CARTRIDGE

CECS-030-SEFN-61

DIRECT ACTING
SPOOL TYPE

ATLANTIC Fluid Tech
WWW.SUMY.IR

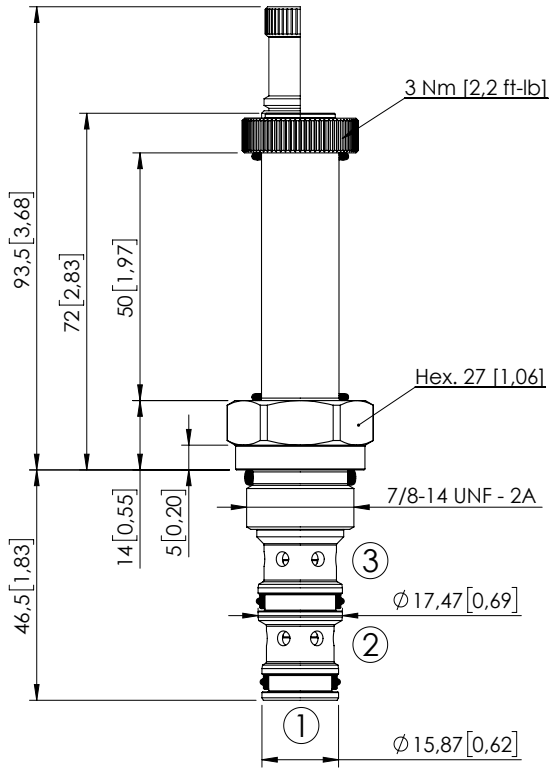

Dimensions: mm [inches]

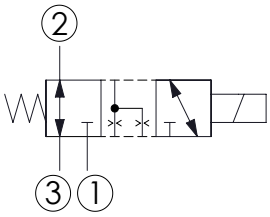

SPECIFICATIONS

Max. operating pressure:	350 bar (5000 psi)
Rated flow:	30 l/min (8 gpm)
Cavity:	SAE-10-3N
Weight:	0.20 kg (0,44 lbs)
Min. voltage required:	90% of nominal
Coil type:	M16 type
Ambient temperature:	-20/+50 °C (-4/+122 °F)
Contamination class to ISO 4406:	See technical spec.
Seal kit:	RB600092
Installation torque:	55 - 62 Nm (41 - 46 ft-lb)
MTTFd:	150 - 1200 years: See technical spec.
Leakage:	70 cm³/min (@46 cSt) 4,2 in³/min (@46 cSt)

NOTES

For other configurations/quick codes not available in this catalogue page please consult factory

OPTIONS

Standard

Knob style override

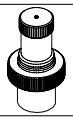

CURVES

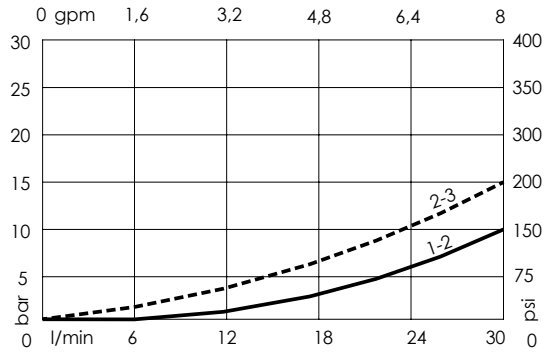

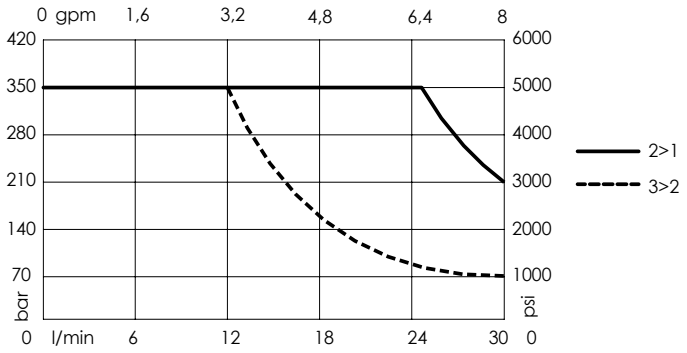

ORDERING CODES

Quick code	Description	Options	
CE000985	CECS-030-SEFN-61-S10-N350	Standard	
CE000986	CECS-030-SEFE-61-S10-N350	Knob style override	

Revision D

SOLENOID OPERATED CARTRIDGE

CECS-030-SEFN-62

DIRECT ACTING
SPOOL TYPE

ATLANTIC Fluid Tech
WWW.SUMY.IR

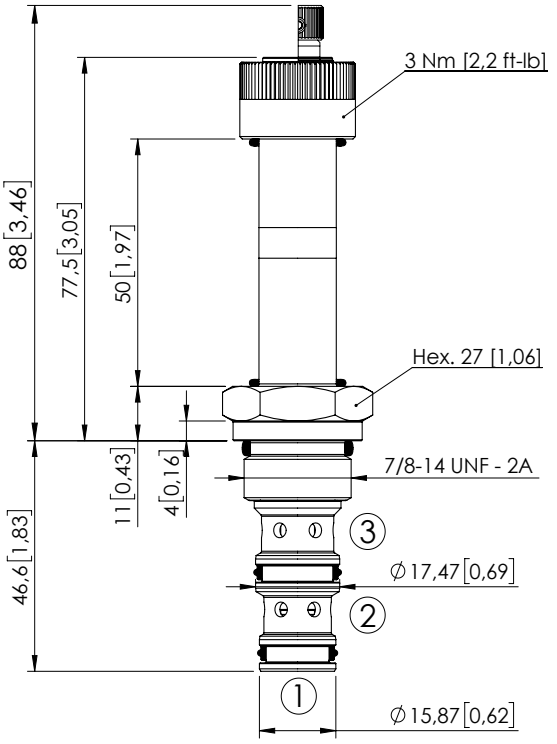

Dimensions: mm [inches]

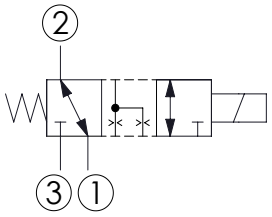

SPECIFICATIONS

Max. operating pressure:	350 bar (5000 psi)
Rated flow:	30 l/min (8 gpm)
Cavity:	SAE-10-3N
Weight:	0,26 kg (0,57 lbs)
Min. voltage required:	90% of nominal
Coil type:	M16 type
Ambient temperature:	-20/+50 °C (-4/+122 °F)
Contamination class to ISO 4406:	See technical spec.
Seal kit:	RB600092
Installation torque:	50 - 55 Nm (37 - 41 ft-lb)
MTTFd:	150 - 1200 years: See technical spec.
Leakage:	70 cm³/min (@46 cSt) 4,2 in³/min (@46 cSt)

NOTES

For other configurations/quick codes not available in this catalogue page please consult factory

OPTIONS

Standard

Knob style override

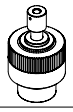

CURVES

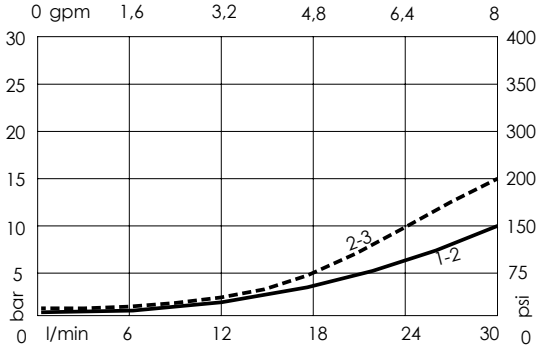

ORDERING CODES

Quick code	Description	Options	
CE000987	CECS-030-SEFN-62-S10-N350	Standard	
CE000988	CECS-030-SEFE-62-S10-N350	Knob style override	

Revision E

SOLENOID OPERATED CARTRIDGE

CECS-030-SEFN-63

DIRECT ACTING
SPOOL TYPE

ATLANTIC Fluid Tech
WWW.SUMY.IR

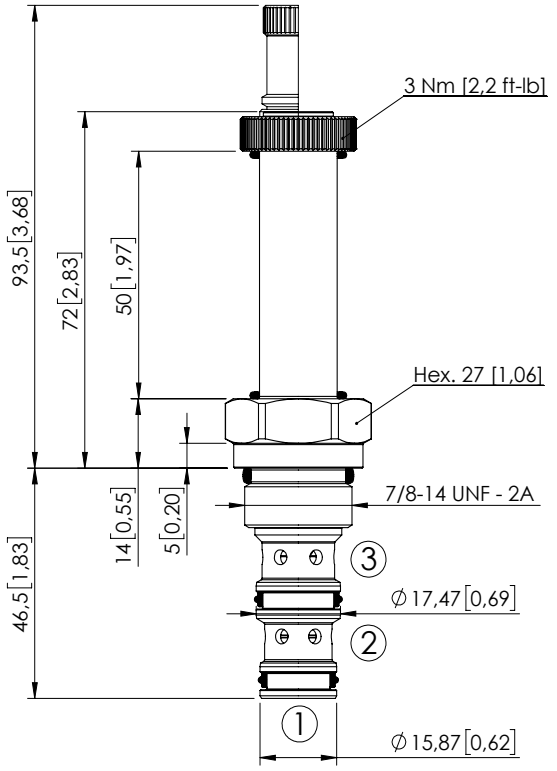

Dimensions: mm [inches]

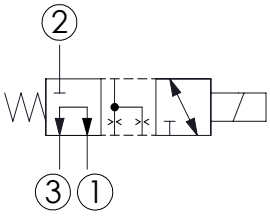

SPECIFICATIONS

Max. operating pressure:	350 bar (5000 psi)
Rated flow:	30 l/min (8 gpm)
Cavity:	SAE-10-3N
Weight:	0,2 kg (0,44 lbs)
Min. voltage required:	90% of nominal
Coil type:	M16 type
Ambient temperature:	-20/+50 °C (-4/+122 °F)
Contamination class to ISO 4406:	See technical spec.
Seal kit:	RB600092
Installation torque:	55 - 62 Nm (41 - 46 ft-lb)
MTTFd:	150 - 1200 years: See technical spec.
Leakage:	70 cm³/min (@46 cSt) 4,2 in³/min (@46 cSt)

NOTES

For other configurations/quick codes not available in this catalogue page please consult factory

OPTIONS

Standard

Knob style override

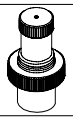

CURVES

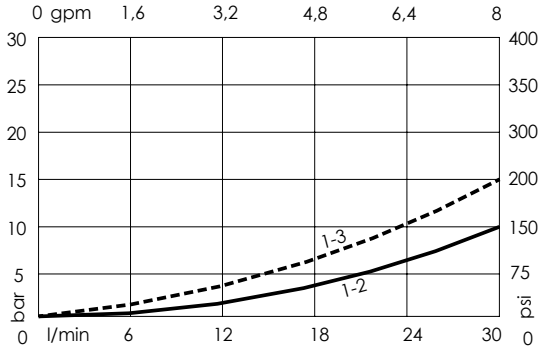

ORDERING CODES

Quick code	Description	Options	
CE000989	CECS-030-SEFN-63-S10-N350	Standard	
CE000990	CECS-030-SEFE-63-S10-N350	Knob style override	

Revision C

SOLENOID OPERATED CARTRIDGE

CECS-030-SEFN-64

DIRECT ACTING
SPOOL TYPE

ATLANTIC Fluid Tech
WWW.SUMY.IR

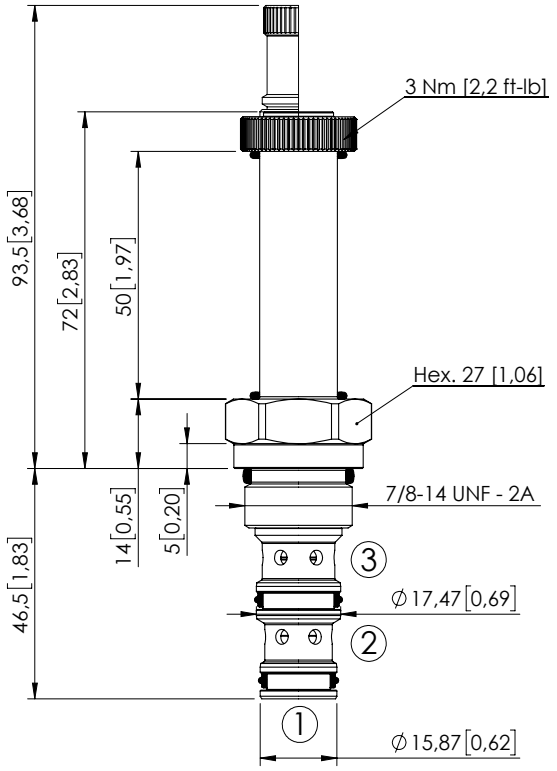

Dimensions: mm [inches]

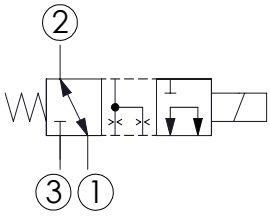

SPECIFICATIONS

Max. operating pressure:	350 bar (5000 psi)
Rated flow:	30 l/min (8 gpm)
Cavity:	SAE-10-3N
Weight:	0,2 kg (0,44 lbs)
Min. voltage required:	90% of nominal
Coil type:	M16 type
Ambient temperature:	-20/+50 °C (-4/+122 °F)
Contamination class to ISO 4406:	See technical spec.
Seal kit:	RB600092
Installation torque:	55 - 62 Nm (41 - 46 ft-lb)
MTTFd:	150 - 1200 years: See technical spec.
Leakage:	70 cm³/min (@46 cSt) 4,2 in³/min (@46 cSt)

NOTES

For other configurations/quick codes not available in this catalogue page please consult factory

OPTIONS

Standard

Knob style override

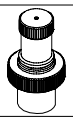

CURVES

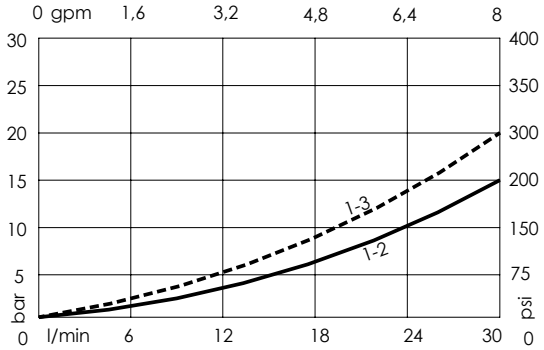

ORDERING CODES

Quick code	Description	Options	
CE000991	CECS-030-SEFN-64-S10-N350	Standard	
CE000992	CECS-030-SEFE-64-S10-N350	Knob style override	

Revision C

SOLENOID OPERATED CARTRIDGE

CECD-020-SEFN-66

DIRECT OPERATED
POPPET TYPE

ATLANTIC Fluid Tech
WWW.SUMY.IR

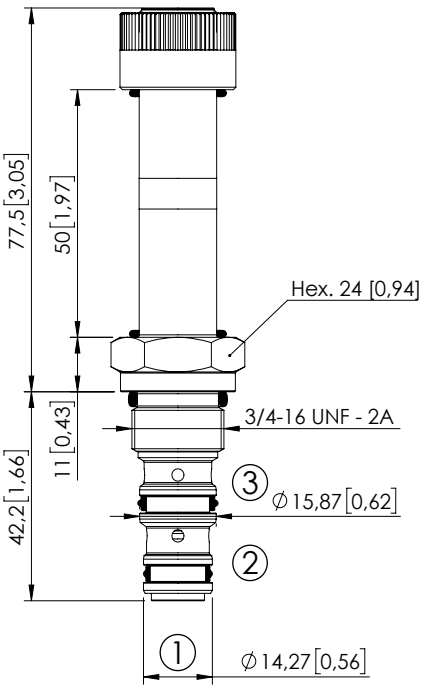

Dimensions: mm [inches]

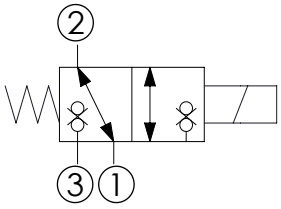

SPECIFICATIONS

Max. operating pressure:	350 bar (5000 psi)
Rated flow:	20 l/min (5 gpm)
Cavity:	SAE-08-3N
Weight:	0.38 kg (0,55 lbs)
Min. voltage required:	90% of nominal
Coil type:	M16 type
Ambient temperature:	-20/+50 °C (-4/+122 °F)
Contamination class to ISO 4406:	See technical spec.
Seal kit:	RB600091
Installation torque:	45 - 50 Nm (33,2 - 36,9 ft-lb)
MTTFd:	150 - 1200 years: See technical spec.
Leakage:	0,15 cm^3/min (@46 cSt) 0,009 in^3/min (@46 cSt)

NOTES

For other configurations/quick codes not available in this catalogue page please consult factory

OPTIONS

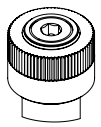

Push style
Manual Override

CURVES

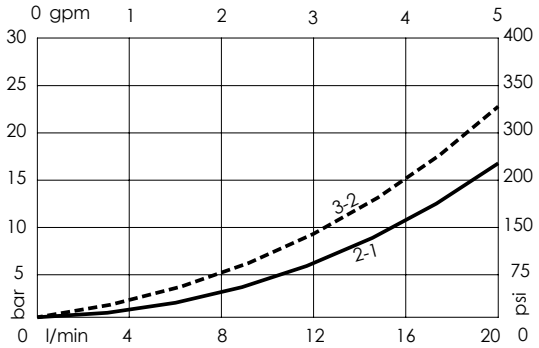

ORDERING CODES

Quick code	Description	Options	
CE001191	CECD-020-SEFN-66-S08-N350	Push style Manual Override	

Revision A

SOLENOID OPERATED CARTRIDGE

CECD-030-SEFP-66

DIRECT OPERATED
POPPET TYPE

ATLANTIC Fluid Tech
WWW.SUMY.IR

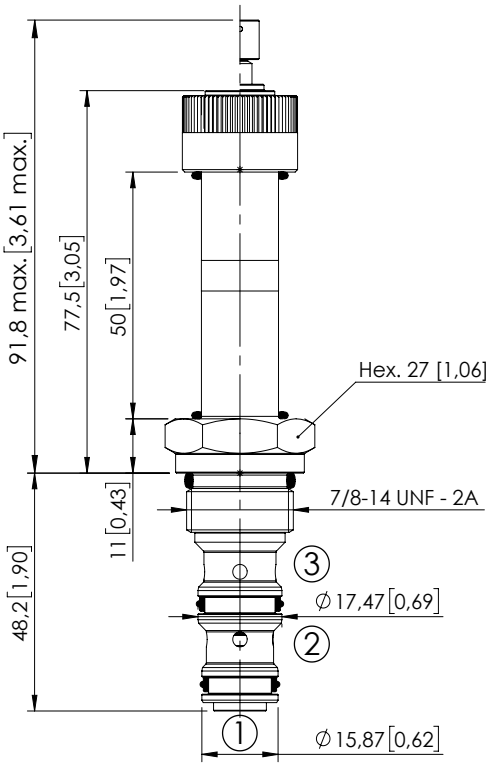

Dimensions: mm [inches]

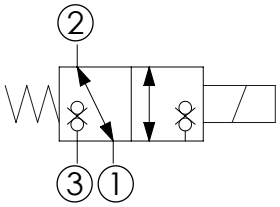

SPECIFICATIONS

Max. operating pressure:	350 bar (5000 psi)
Rated flow:	30 l/min (8 gpm)
Cavity:	SAE-10-3N
Weight:	0,26 kg (0,57 lbs)
Min. voltage required:	90% of nominal
Coil type:	M16 type
Ambient temperature:	-20/+50 °C (-4/+122 °F)
Contamination class to ISO 4406:	See technical spec.
Seal kit:	RB600092
Installation torque:	55 - 62 Nm (41 - 46 ft-lb)
MTTFd:	150 - 1200 years: See technical spec.
Leakage:	0,15 cm³/min (@46 cSt) 0,009 in³/min (@46 cSt)

NOTES

For other configurations/quick codes not available in this catalogue page please consult factory

OPTIONS

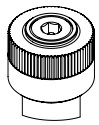

Standard

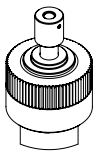

Knob style override

CURVES

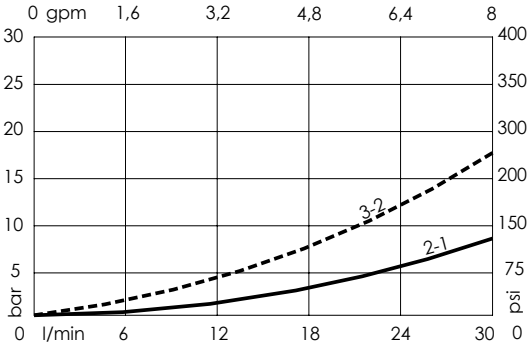

ORDERING CODES

Quick code	Description	Options	
CE001030	CECD-030-SEFN-66-S10-N350	Standard	
CE001918	CECD-030-SEFE-66-S10-N350	Knob style override	

Revision B

SOLENOID OPERATED CARTRIDGE

CEDS-015-SEFN-40

DIRECT OPERATED
SPOOL TYPE

ATLANTIC Fluid Tech
WWW.SUMY.IR

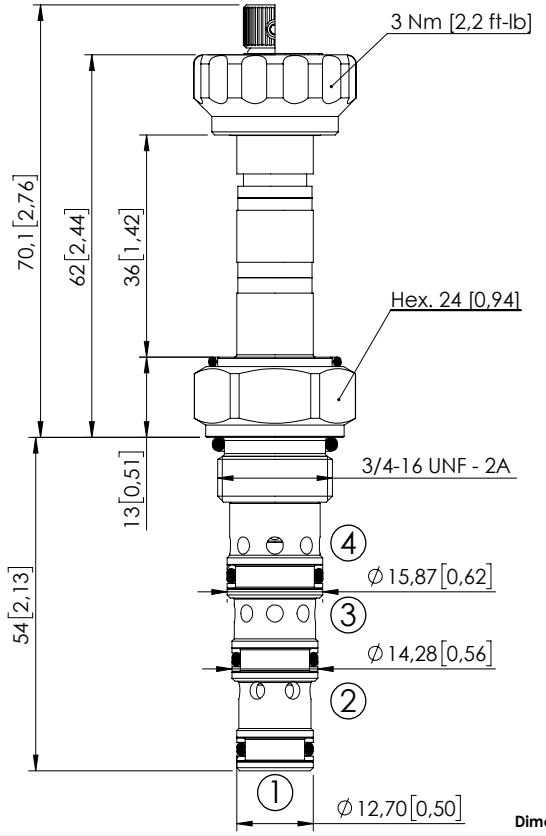

Dimensions: mm [inches]

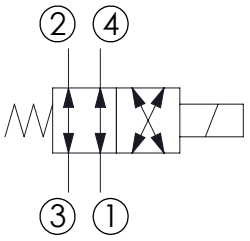

SPECIFICATIONS

Max. operating pressure:	350 bar (5000 psi)
Max. operating pressure on port 1:	280 bar (4000 psi)
Rated flow:	15 l/min (4 gpm)
Cavity:	SAE-08-4N
Weight:	0,14 kg (0,26 lbs)
Min. voltage required:	90% of nominal
Coil type:	M7 or M3 type
Ambient temperature:	-20/+50 °C (-4/+122 °F)
Contamination class to ISO 4406:	See technical spec.
Seal kit:	RB700101
Installation torque:	45 - 50 Nm (33 - 37 ft-lb)
MTTFd:	150 - 1200 years: See technical spec.
Leakage:	120 cm³/min (@46 cSt) 7,3 in³/min (@46 cSt)

NOTES

For other configurations/quick codes not available in this catalogue page please consult factory

OPTIONS

Standard	
Knob style override	

CURVES

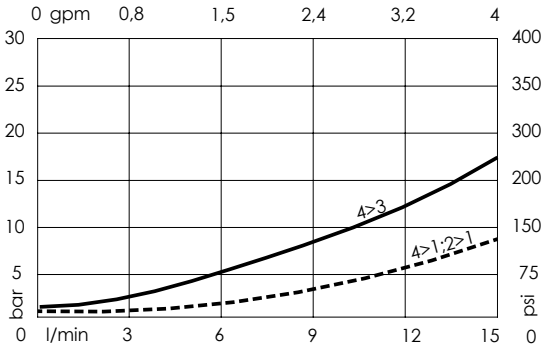

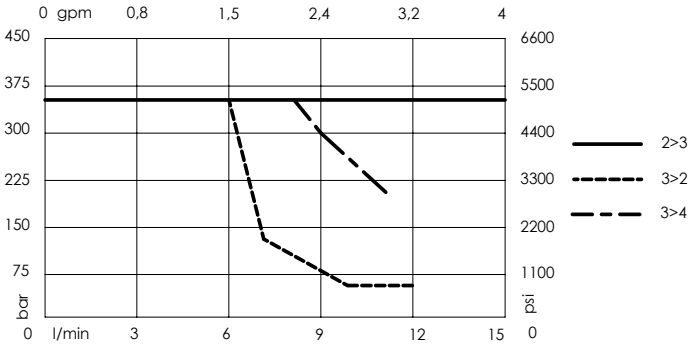

ORDERING CODES

Quick code	Description	Options	
CE000014	CEDS-015-SEFN-40-S08-N350	Standard	
CE000071	CEDS-015-SEFE-40-S08-N350	Knob style override	

Revision B1

SOLENOID OPERATED CARTRIDGE

CEDS-015-SEFN-49

DIRECT OPERATED
SPOOL TYPE

ATLANTIC Fluid Tech
WWW.SUMY.IR

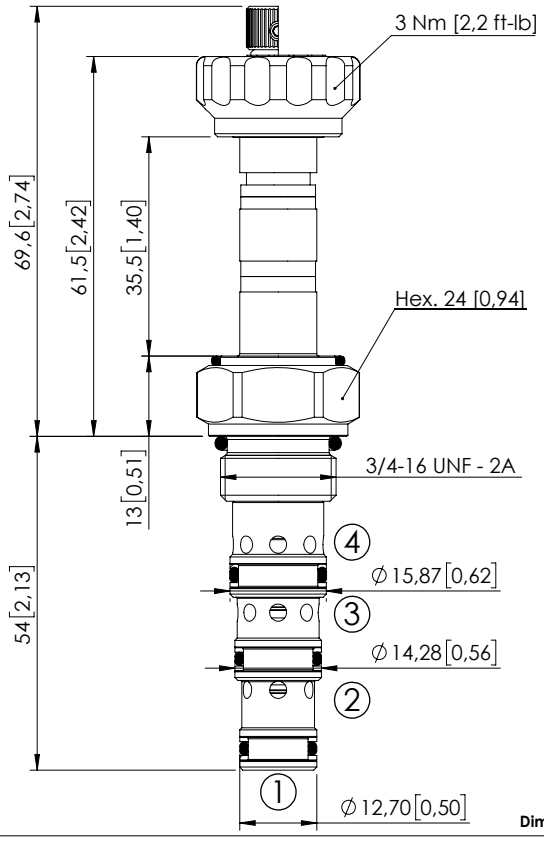

Dimensions: mm [inches]

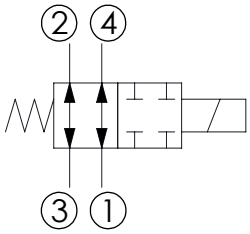

SPECIFICATIONS

Max. operating pressure:	350 bar (5000 psi)
Max. operating pressure on port 1:	280 bar (4000 psi)
Rated flow:	15 l/min (4 gpm)
Cavity:	SAE-08-4N
Weight:	0,14 kg (0,26 lbs)
Min. voltage required:	90% of nominal
Coil type:	M7 or M3 type
Ambient temperature:	-20/+50 °C (-4/+122 °F)
Contamination class to ISO 4406:	See technical spec.
Seal kit:	RB700101
Installation torque:	45 - 50 Nm (33 - 37 ft-lb)
MTTFd:	150 - 1200 years: See technical spec.
Leakage:	120 cm³/min (@46 cSt) 7,3 in³/min (@46 cSt)

NOTES

For other configurations/quick codes not available in this catalogue page please consult factory

OPTIONS

Standard	
Knob style override	

CURVES

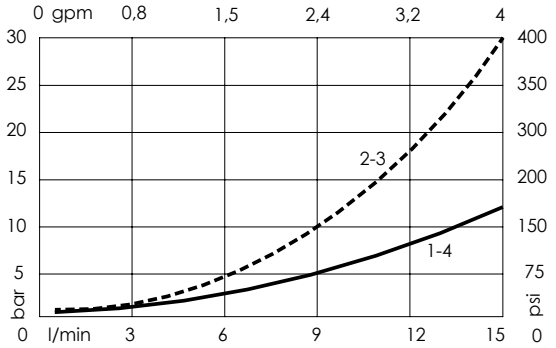

ORDERING CODES

Quick code	Description	Options	
CE000867	CEDS-015-SEFN-49-S08-N350	Standard	
CE000787	CEDS-015-SEFE-49-S08-N350	Knob style override	

Revision A1

SOLENOID OPERATED CARTRIDGE

CEDS-015-SEFN-41

DIRECT OPERATED
SPOOL TYPE

ATLANTIC Fluid Tech
WWW.SUMY.IR

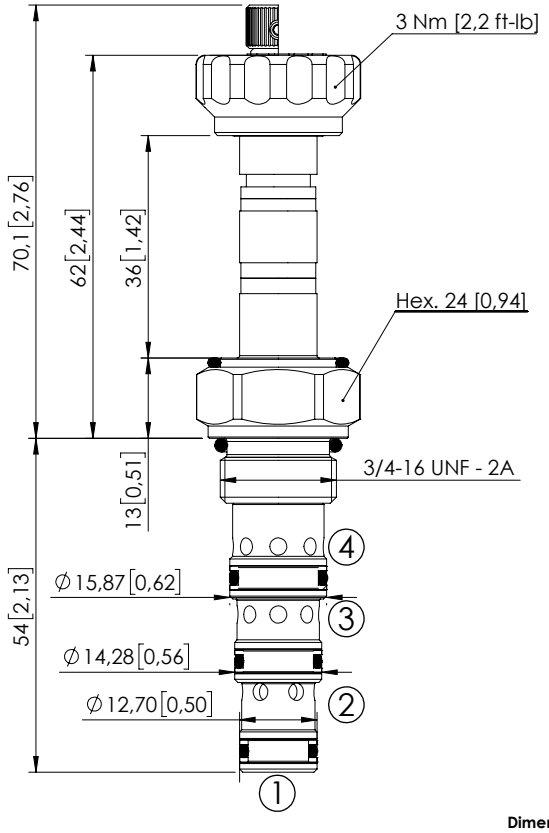

Dimensions: mm [inches]

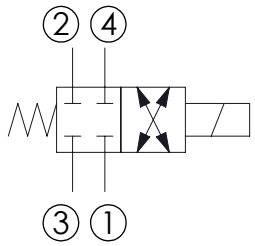

SPECIFICATIONS

Max. operating pressure:	350 bar (5000 psi)
Max. operating pressure on port 1:	280 bar (4000 psi)
Rated flow:	15 l/min (4 gpm)
Cavity:	SAE-08-4N
Weight:	0,15 kg (0,26 lbs)
Min. voltage required:	90% of nominal
Coil type:	M7 or M3 type
Ambient temperature:	-20/+50 °C (-4/+122 °F)
Contamination class to ISO 4406:	See technical spec.
Seal kit:	RB700101
Installation torque:	45 - 50 Nm (33 - 37 ft-lb)
MTTFd:	150 - 1200 years: See technical spec.
Leakage:	120 cm³/min (@46 cSt) 7,3 in³/min (@46 cSt)

NOTES

For other configurations/quick codes not available in this catalogue page please consult factory

OPTIONS

Standard	
Knob style override	

CURVES

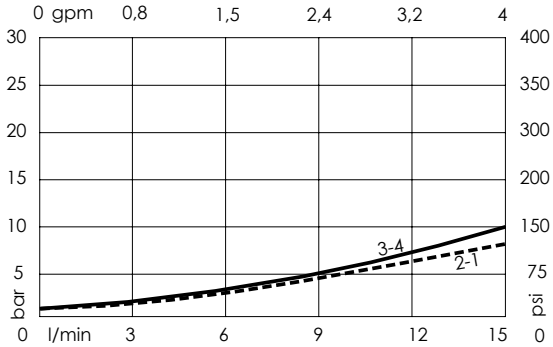

ORDERING CODES

Quick code	Description	Options	
CE000012	CEDS-015-SEFN-41-S08-N350	Standard	
CE000073	CEDS-015-SEFE-41-S08-N350	Knob style override	

Revision B1

SOLENOID OPERATED CARTRIDGE

CEDS-015-SEFN-43

DIRECT OPERATED
SPOOL TYPE

ATLANTIC Fluid Tech
WWW.SUMY.IR

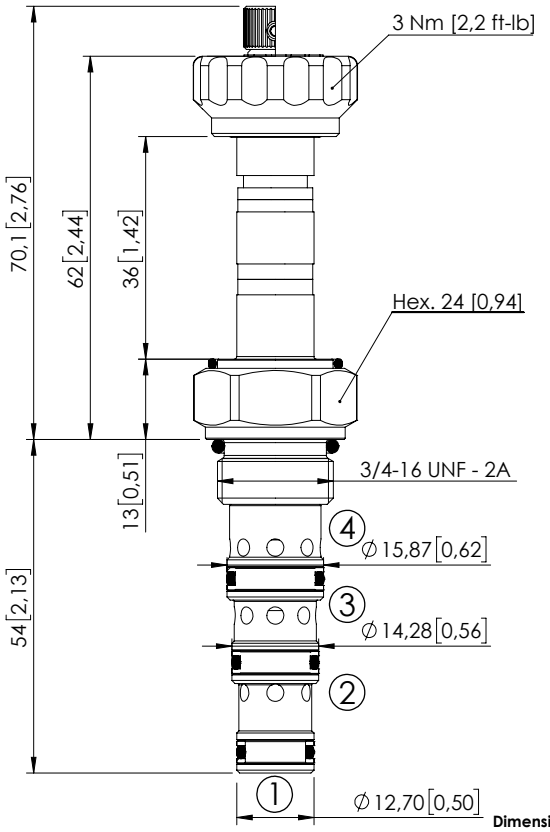

Dimensions: mm [inches]

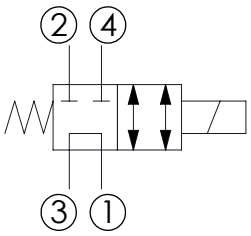

SPECIFICATIONS

Max. operating pressure:	350 bar (5000 psi)
Max. operating pressure on port 1:	280 bar (4000 psi)
Rated flow:	15 l/min (4 gpm)
Cavity:	SAE-08-4N
Weight:	0,15 kg (0,26 lbs)
Min. voltage required:	90% of nominal
Coil type:	M7 or M3 type
Ambient temperature:	-20/+50 °C (-4/+122 °F)
Contamination class to ISO 4406:	See technical spec.
Seal kit:	RB700101
Installation torque:	45 - 50 Nm (33 - 37 ft-lb)
MTTFd:	150 - 1200 years: See technical spec.
Leakage:	120 cm³/min (@46 cSt) 7,3 in³/min (@46 cSt)

NOTES

For other configurations/quick codes not available in this catalogue page please consult factory

OPTIONS

Standard	
Knob style override	

CURVES

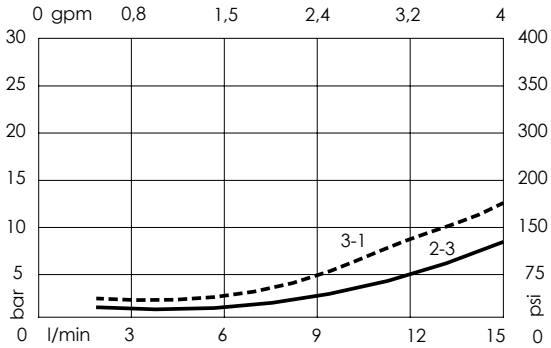

ORDERING CODES

Quick code	Description	Options	
CE000006	CEDS-015-SEFN-43-S08-N350	Standard	
CE000074	CEDS-015-SEFE-43-S08-N350	Knob style override	

Revision B1

SOLENOID OPERATED CARTRIDGE

CEDS-030-SEFN-40

DIRECT ACTING
SPOOL TYPE

ATLANTIC Fluid Tech
WWW.SUMY.IR

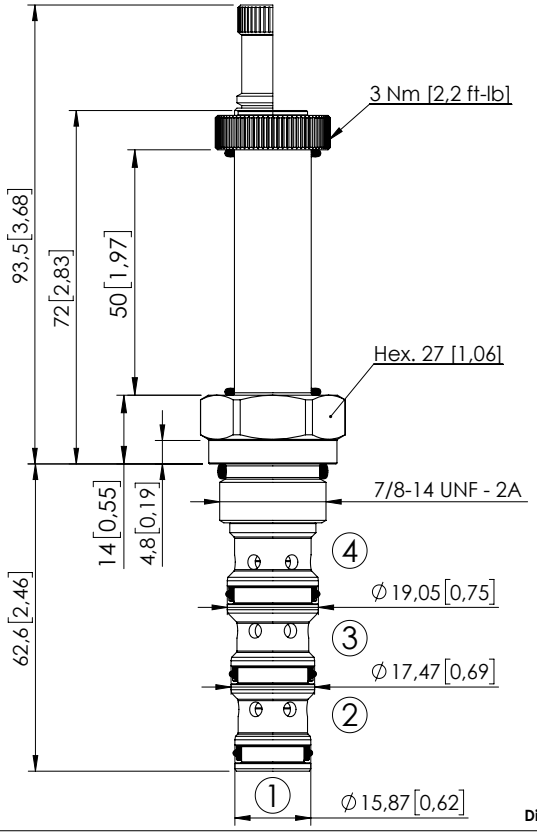

Dimensions: mm [inches]

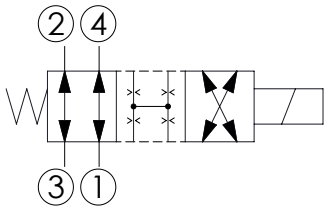

SPECIFICATIONS

Max. operating pressure:	350 bar (5000 psi)
Max. operating pressure on port 1:	210 bar (3000 psi)
Rated flow:	30 l/min (8 gpm)
Cavity:	SAE-10-4N
Weight:	0.22 kg (0,44 lbs)
Min. voltage required:	90% of nominal
Coil type:	M16 type
Ambient temperature:	-20/+50 °C (-4/+122 °F)
Contamination class to ISO 4406:	See technical spec.
Seal kit:	RB600102
Installation torque:	55 - 62 Nm (41 - 46 ft-lb)
MTTFd:	150 - 1200 years: See technical spec.
Leakage:	70 cm^3/min (@46 cSt) 4,2 in^3/min (@46 cSt)

NOTES

For other configurations/quick codes not available in this catalogue page please consult factory

OPTIONS

Standard	
Knob style override	

CURVES

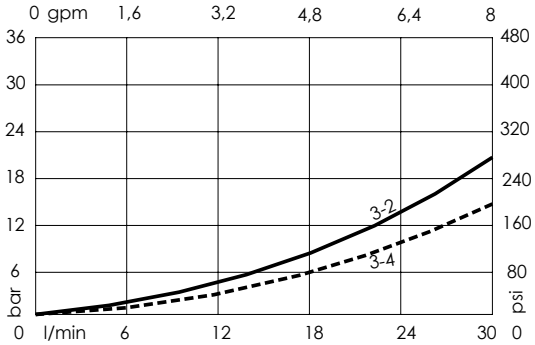

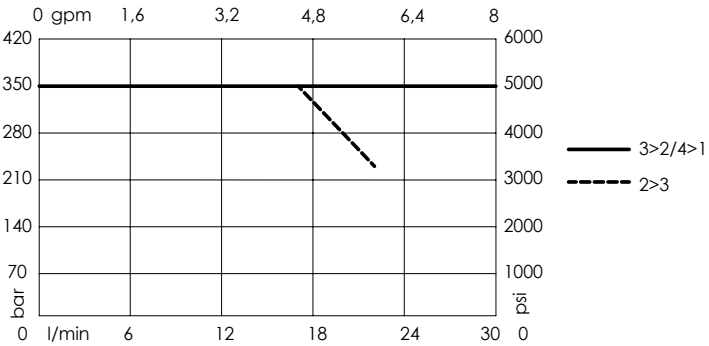

ORDERING CODES

Quick code	Description	Options	
CE000951	CEDS-030-SEFN-40-S10-N350	Standard	
CE000993	CEDS-030-SEFE-40-S10-N350	Knob style override	

Revision E

SOLENOID OPERATED CARTRIDGE

CEDS-030-SEFN-41

DIRECT ACTING
SPOOL TYPE

ATLANTIC Fluid Tech
WWW.SUMY.IR

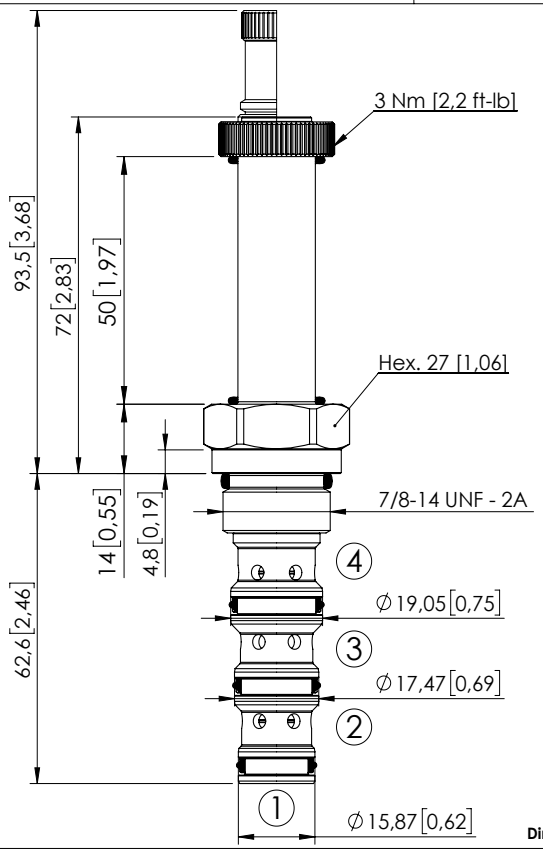

Dimensions: mm [inches]

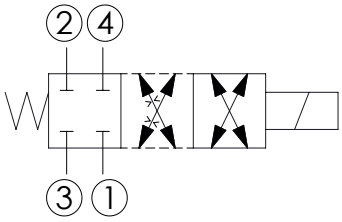

SPECIFICATIONS

Max. operating pressure:	350 bar (5000 psi)
Max. operating pressure on port 1:	210 bar (3000 psi)
Rated flow:	30 l/min (8 gpm)
Cavity:	SAE-10-4N
Weight:	0.23 kg (0,44 lbs)
Min. voltage required:	90% of nominal
Coil type:	M16 type
Ambient temperature:	-20/+50 °C (-4/+122 °F)
Contamination class to ISO 4406:	See technical spec.
Seal kit:	RB600102
Installation torque:	55 - 62 Nm (41 - 46 ft-lb)
MTTFd:	150 - 1200 years: See technical spec.
Leakage:	70 cm³/min (@46 cSt) 4,2 in³/min (@46 cSt)

NOTES

For other configurations/quick codes not available in this catalogue page please consult factory

OPTIONS

Standard	
Knob style override	

CURVES

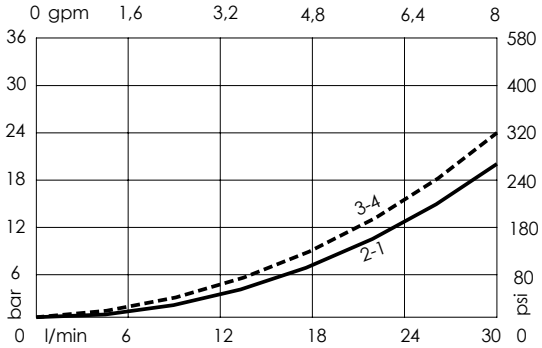

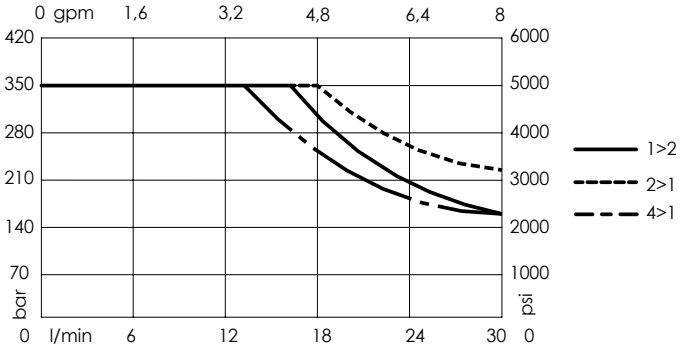

ORDERING CODES

Quick code	Description	Options	
CE000994	CEDS-030-SEFN-41-S10-N350	Standard	
CE000995	CEDS-030-SEFE-41-S10-N350	Knob style override	

Revision C

SOLENOID OPERATED CARTRIDGE

CEDS-030-SEFN-43

DIRECT ACTING
SPOOL TYPE

ATLANTIC Fluid Tech
WWW.SUMY.IR

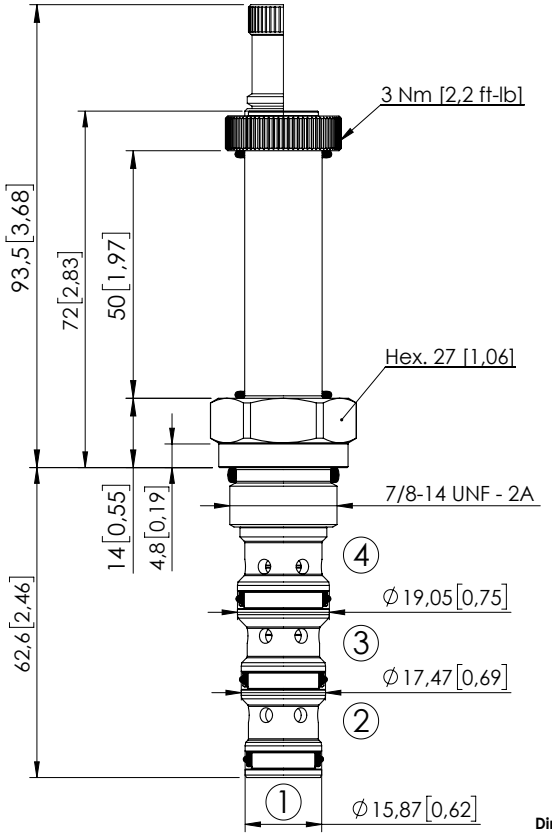

Dimensions: mm [inches]

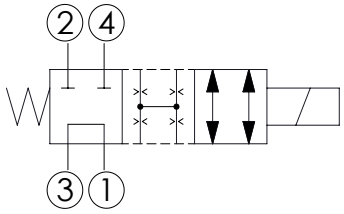

SPECIFICATIONS

Max. operating pressure:	350 bar (5000 psi)
Max. operating pressure on port 1:	210 bar (3000 psi)
Rated flow:	30 l/min (8 gpm)
Cavity:	SAE-10-4N
Weight:	0.23 kg (0,44 lbs)
Min. voltage required:	90% of nominal
Coil type:	M16 type
Ambient temperature:	-20/+50 °C (-4/+122 °F)
Contamination class to ISO 4406:	See technical spec.
Seal kit:	RB600102
Installation torque:	55 - 62 Nm (41 - 46 ft-lb)
MTTFd:	150 - 1200 years: See technical spec.
Leakage:	70 cm^3/min (@46 cSt) 4,2 in^3/min (@46 cSt)

NOTES

For other configurations/quick codes not available in this catalogue page please consult factory

OPTIONS

Standard	
Knob style override	

CURVES

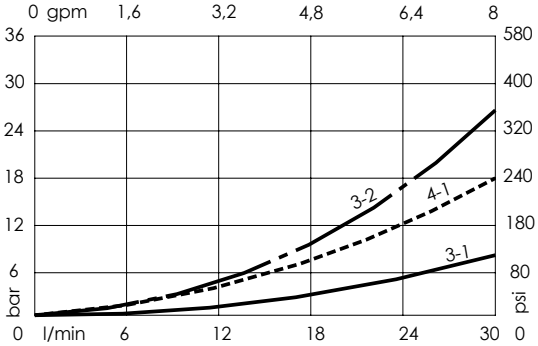

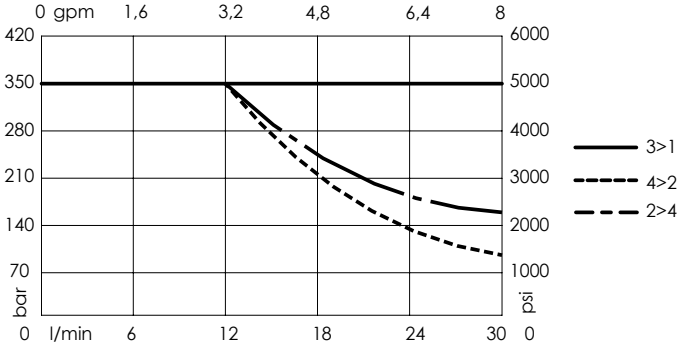

ORDERING CODES

Quick code	Description	Options	
CE000996	CEDS-030-SEFN-43-S10-N350	Standard	
CE000997	CEDS-030-SEFE-43-S10-N350	Knob style override	

Revision D

SOLENOID OPERATED CARTRIDGE

CEDS-030-SEFN-111

DIRECT ACTING
SPOOL TYPE

ATLANTIC Fluid Tech
WWW.SUMY.IR

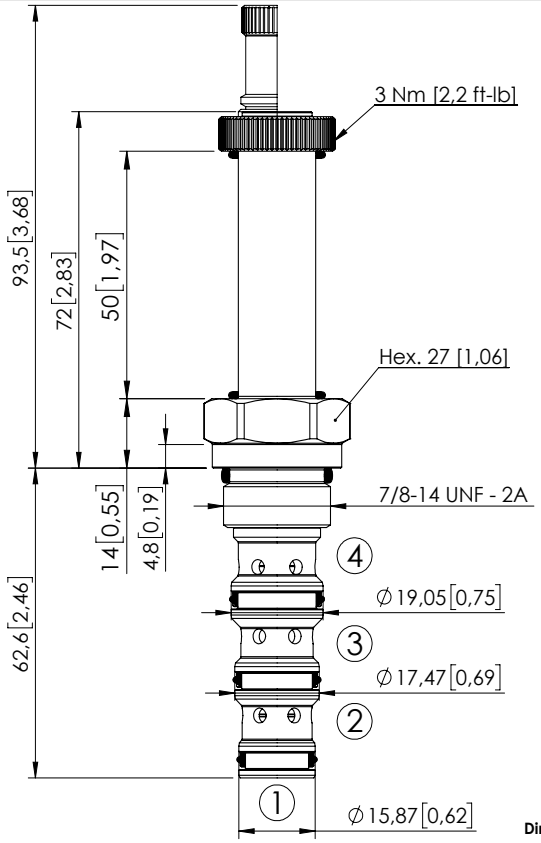

Dimensions: mm [inches]

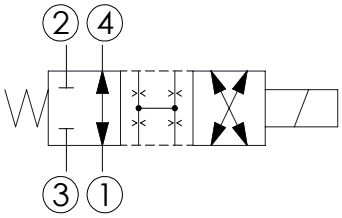

SPECIFICATIONS

Max. operating pressure:	350 bar (5000 psi)
Rated flow:	30 l/min (8 gpm)
Cavity:	SAE-10-4N
Weight:	0,22 kg (0,44 lbs)
Min. voltage required:	90% of nominal
Coil type:	M16 type
Ambient temperature:	-20/+50 °C (-4/+122 °F)
Contamination class to ISO 4406:	See technical spec.
Seal kit:	RB600102
Installation torque:	55 - 62 Nm (41 - 46 ft-lb)
MTTFd:	150 - 1200 years: See technical spec.
Leakage:	70 cm³/min (@46 cSt) 4,2 in³/min (@46 cSt)

NOTES

For other configurations/quick codes not available in this catalogue page please consult factory

OPTIONS

Standard

Knob style override

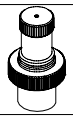

CURVES

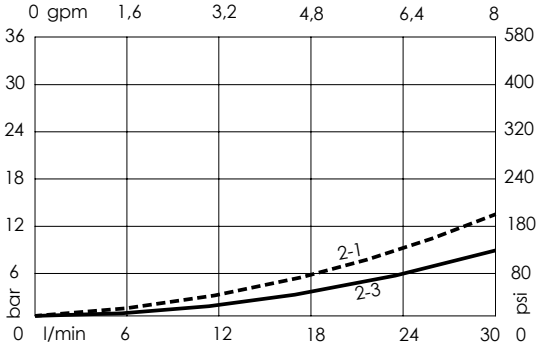

ORDERING CODES

Quick code	Description	Options	
CE000984	CEDS-030-SEFN-111-S10-N350	Standard	
CE000998	CEDS-030-SEFE-111-S10-N350	Knob style override	

Revision C

SOLENOID OPERATED CARTRIDGE

CEES-010-SEFN-51

DIRECT OPERATED
SPOOL TYPE

ATLANTIC Fluid Tech
WWW.SUMY.IR

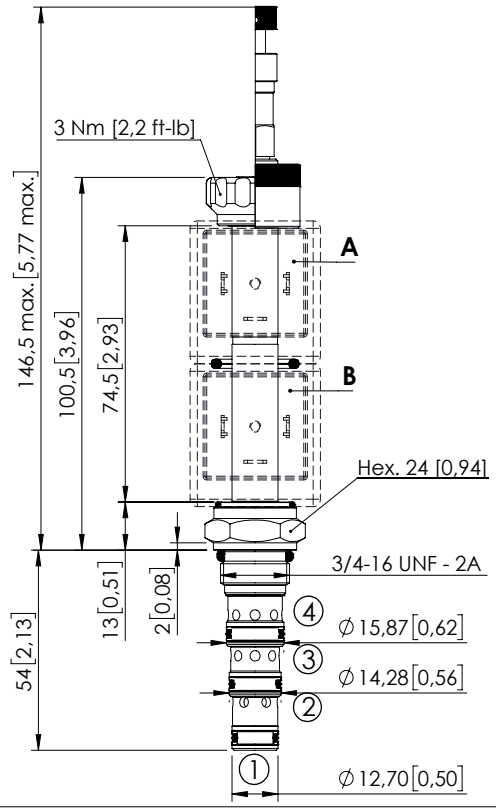

Dimensions: mm [inches]

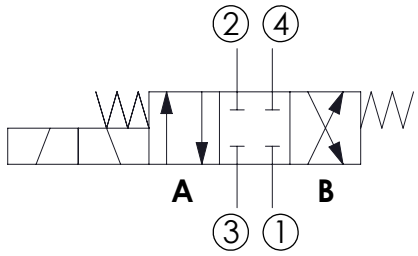

SPECIFICATIONS

Max. operating pressure:	350 bar (5000 psi)
Max. operating pressure on port 1:	210 bar (3000 psi)
Rated flow:	10 l/min (3 gpm)
Cavity:	SAE-08-4N
Weight:	0,18 kg (0,40 lbs)
Min. voltage required:	90% of nominal
Coil type:	M7 or M3 type
Ambient temperature:	-20/+50 °C (-4/+122 °F)
Contamination class to ISO 4406:	See technical spec.
Seal kit:	RB700101
Installation torque:	45 - 50 Nm (33 - 37 ft-lb)
MTTFd:	150 - 1200 years: See technical spec.
Leakage:	120 cm³/min (@46 cSt) 7,3 in³/min (@46 cSt)

NOTES

For other configurations/quick codes not available in this catalogue page please consult factory

OPTIONS

Standard

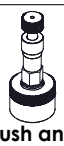

Push and pull manual override

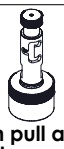

Push pull and twist manual override

CURVES

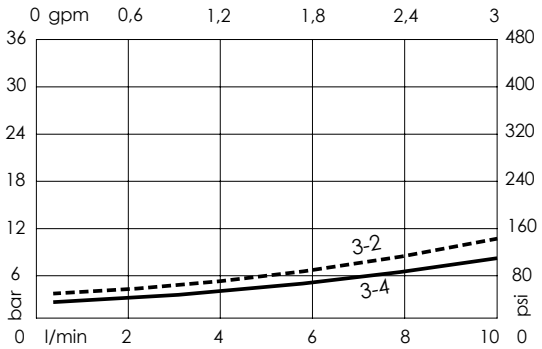

ORDERING CODES

Quick code	Description	Options	
CE000028	CEES-010-SEFN-51-S08-N350	Standard	
CE000098	CEES-010-SEFL-51-S08-N350	Push and pull manual override	
CE000189	CEES-010-SEFG-51-S08-N350	Push pull and twist manual override	

Revision A1

SOLENOID OPERATED CARTRIDGE

CEES-010-SEFN-52

DIRECT OPERATED
SPOOL TYPE

ATLANTIC Fluid Tech
WWW.SUMY.IR

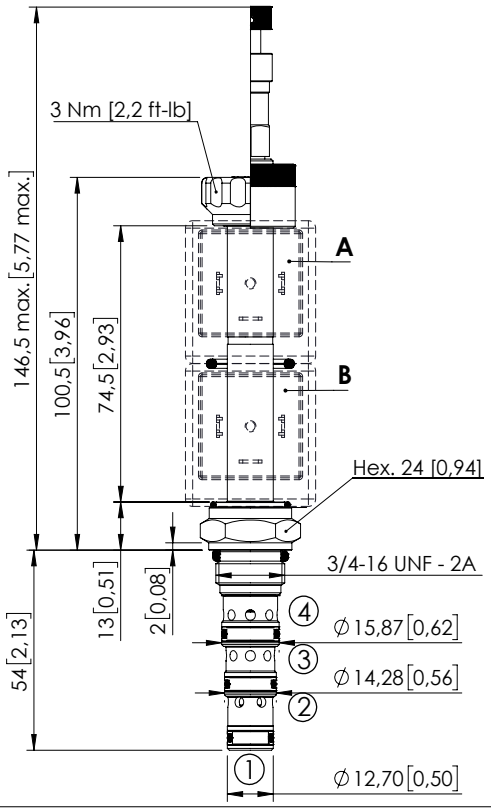

Dimensions: mm [inches]

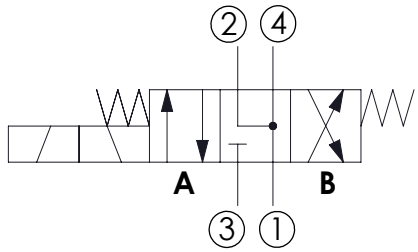

SPECIFICATIONS

Max. operating pressure:	350 bar (5000 psi)
Max. operating pressure on port 1:	210 bar (3000 psi)
Rated flow:	10 l/min (3 gpm)
Cavity:	SAE-08-4N
Weight:	0,18 kg (0,40 lbs)
Min. voltage required:	90% of nominal
Coil type:	M7 or M3 type
Ambient temperature:	-20/+50 °C (-4/+122 °F)
Contamination class to ISO 4406:	See technical spec.
Seal kit:	RB700101
Installation torque:	45 - 50 Nm (33 - 37 ft-lb)
MTTFd:	150 - 1200 years: See technical spec.
Leakage:	120 cm³/min (@46 cSt) 7,3 in³/min (@46 cSt)

NOTES

For other configurations/quick codes not available in this catalogue page please consult factory

OPTIONS

Standard

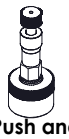

Push and pull manual override

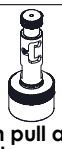

Push pull and twist manual override

CURVES

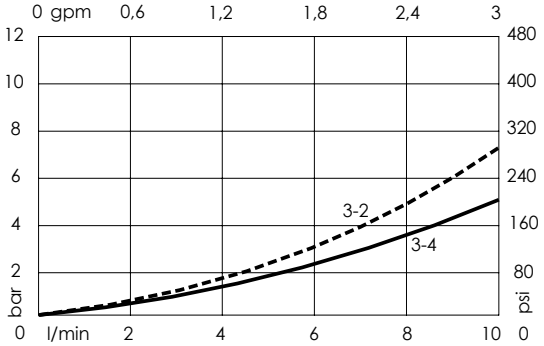

ORDERING CODES

Quick code	Description	Options	
CE000029	CEES-010-SEFN-52-S08-N350	Standard	
CE000095	CEES-010-SEFL-52-S08-N350	Push and pull manual override	
CE000145	CEES-010-SEFG-52-S08-N350	Push pull and twist manual override	

Revision A1

SOLENOID OPERATED CARTRIDGE

CEES-010-SEFN-53

DIRECT OPERATED
SPOOL TYPE

ATLANTIC Fluid Tech
WWW.SUMY.IR

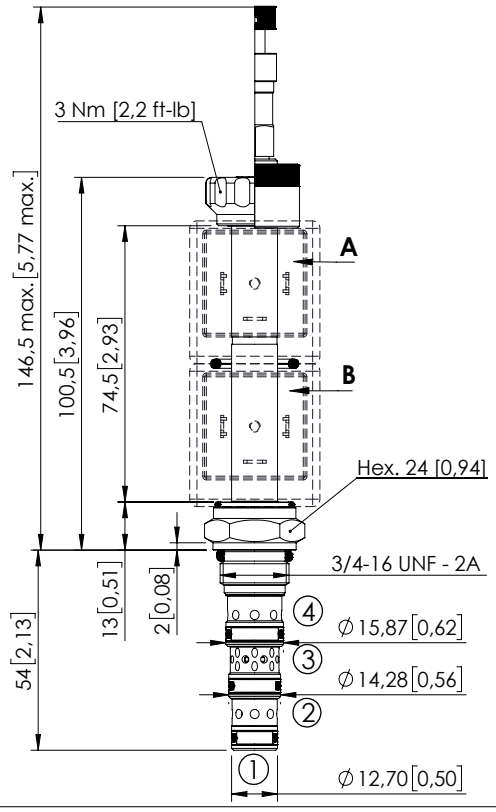

Dimensions: mm [inches]

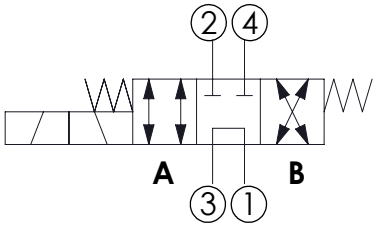

SPECIFICATIONS

Max. operating pressure:	350 bar (5000 psi)
Max. operating pressure on port 1:	210 bar (3000 psi)
Rated flow:	10 l/min (3 gpm)
Cavity:	SAE-08-4N
Weight:	0,18 kg (0,40 lbs)
Min. voltage required:	90% of nominal
Coil type:	M7 or M3 type
Ambient temperature:	-20/+50 °C (-4/+122 °F)
Contamination class to ISO 4406:	See technical spec.
Seal kit:	RB700101
Installation torque:	45 - 50 Nm (33 - 37 ft-lb)
MTTFd:	150 - 1200 years: See technical spec.
Leakage:	120 cm³/min (@46 cSt) 7,3 in³/min (@46 cSt)

NOTES

For other configurations/quick codes not available in this catalogue page please consult factory

OPTIONS

Standard

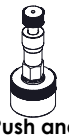

Push and pull manual override

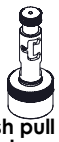

Push pull and twist manual override

CURVES

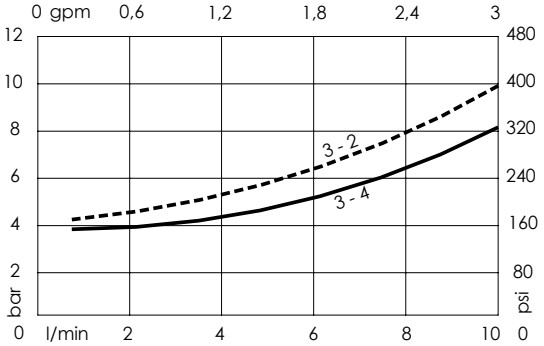

ORDERING CODES

Quick code	Description	Options	
CE000083	CEES-010-SEFN-53-S08-N350	Standard	
CE000097	CEES-010-SEFL-53-S08-N350	Push and pull manual override	
CE000185	CEES-010-SEFG-53-S08-N350	Push pull and twist manual override	

Revision A1

SOLENOID OPERATED CARTRIDGE

CEES-010-SEFN-54

DIRECT OPERATED
SPOOL TYPE

ATLANTIC Fluid Tech
WWW.SUMY.IR

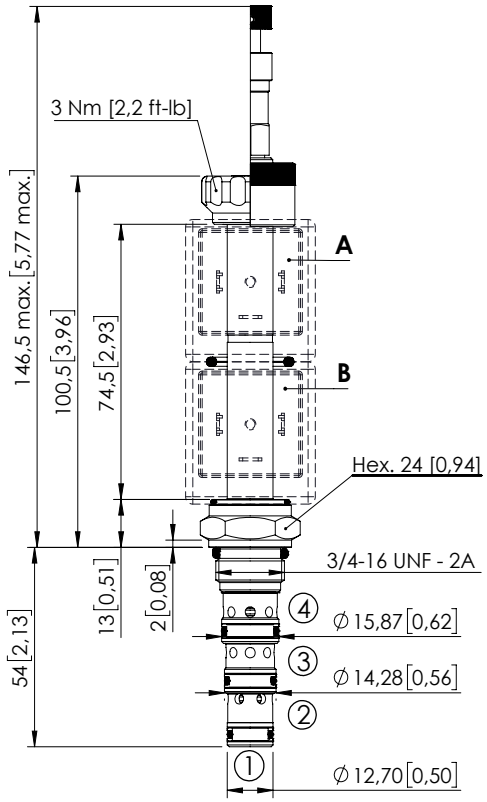

Dimensions: mm [inches]

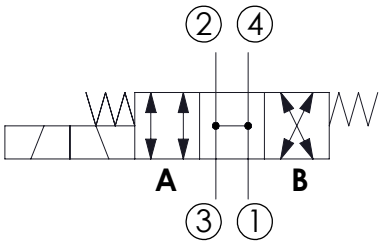

SPECIFICATIONS

Max. operating pressure:	350 bar (5000 psi)
Max. operating pressure on port 1:	210 bar (3000 psi)
Rated flow:	10 l/min (3 gpm)
Cavity:	SAE-08-4N
Weight:	0,18 kg (0,40 lbs)
Min. voltage required:	90% of nominal
Coil type:	M7 or M3 type
Ambient temperature:	-20/+50 °C (-4/+122 °F)
Contamination class to ISO 4406:	See technical spec.
Seal kit:	RB700101
Installation torque:	45 - 50 Nm (33 - 37 ft-lb)
MTTFd:	150 - 1200 years: See technical spec.
Leakage:	120 cm³/min (@46 cSt) 7,3 in³/min (@46 cSt)

NOTES

For other configurations/quick codes not available in this catalogue page please consult factory

OPTIONS

Standard

Push and pull manual override

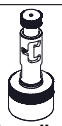

Push pull and twist manual override

CURVES

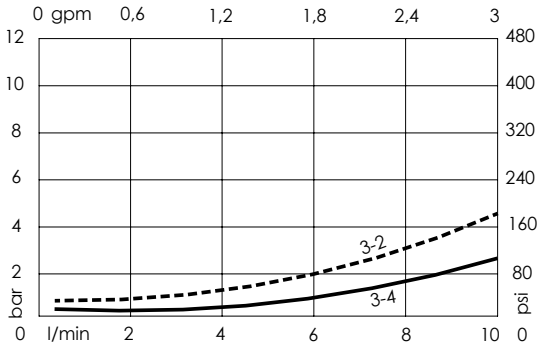

ORDERING CODES

Quick code	Description	Options	
CE000018	CEES-010-SEFN-54-S08-N350	Standard	
CE000099	CEES-010-SEFL-54-S08-N350	Push and pull manual override	
CE000188	CEES-010-SEFG-54-S08-N350	Push pull and twist manual override	

Revision A1

SOLENOID OPERATED CARTRIDGE

CEES-030-SEFN-51

DIRECT OPERATED
SPOOL TYPE

ATLANTIC Fluid Tech
WWW.SUMY.IR

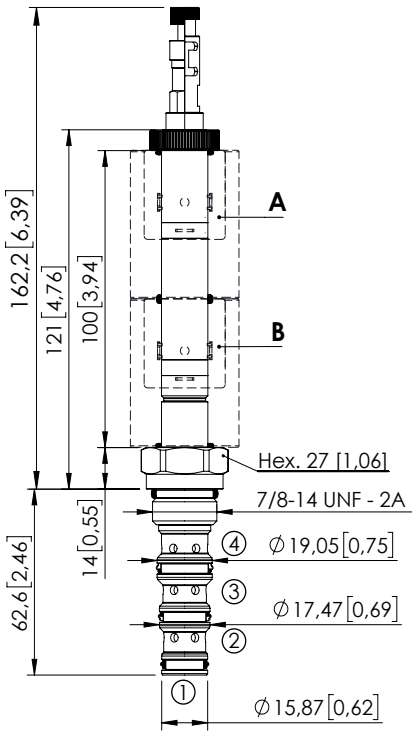

Dimensions: mm [inches]

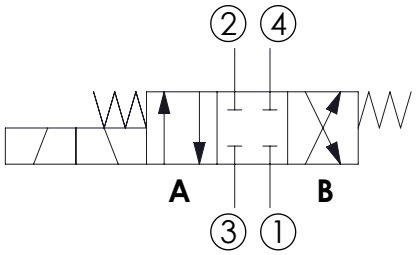

SPECIFICATIONS

Max. operating pressure:	350 bar (5000 psi)
Max. operating pressure on port 1:	250 bar (3600 psi)
Rated flow:	30 l/min (8 gpm)
Cavity:	SAE-10-4N
Weight:	0,21 kg (0,68 lbs)
Min. voltage required:	90% of nominal
Coil type:	M16 type
Ambient temperature:	-20/+50 °C (-4/+122 °F)
Contamination class to ISO 4406:	See technical spec.
Seal kit:	RB600102
Installation torque:	55 - 62 Nm (41 - 46 ft-lb)
MTTFd:	150 - 1200 years: See technical spec.
Leakage:	120 cm^3/min (@46 cSt) 7,3 in^3/min (@46 cSt)

NOTES

For other configurations/quick codes not available in this catalogue page please consult factory

OPTIONS

Standard

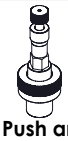

Push and pull manual override

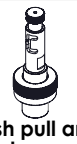

Push pull and twist manual override

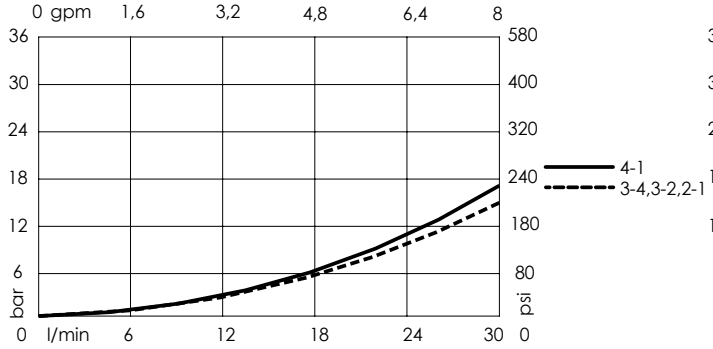

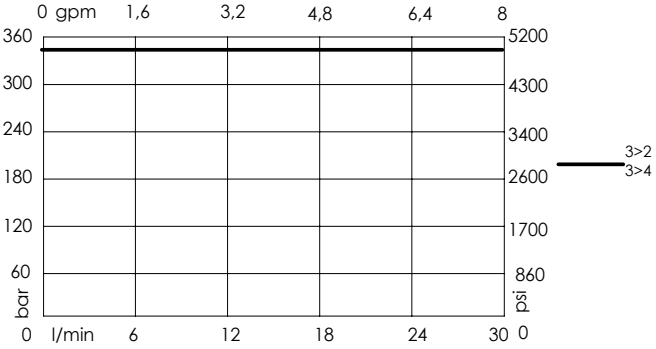

ORDERING CODES

Quick code	Description	Options	
CE000999	CEES-030-SEFN-51-S10-N350	Standard	
CE001000	CEES-030-SEFL-51-S10-N350	Push and pull manual override	
CE001001	CEES-030-SEFG-51-S10-N350	Push pull and twist manual override	

Revision C

SOLENOID OPERATED CARTRIDGE

CEES-030-SEFN-52

DIRECT OPERATED
SPOOL TYPE

ATLANTIC Fluid Tech
WWW.SUMY.IR

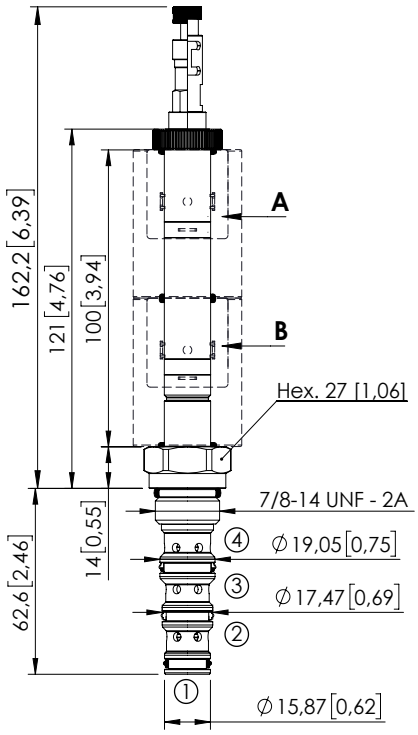

Dimensions: mm [inches]

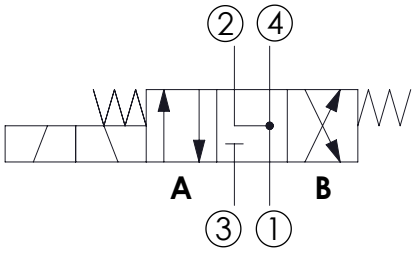

SPECIFICATIONS

Max. operating pressure:	350 bar (5000 psi)
Max. operating pressure on port 1:	210 bar (3000 psi)
Rated flow:	30 l/min (8 gpm)
Cavity:	SAE-10-4N
Weight:	0,21 kg (0,68 lbs)
Min. voltage required:	90% of nominal
Coil type:	M16 type
Ambient temperature:	-20/+50 °C (-4/+122 °F)
Contamination class to ISO 4406:	See technical spec.
Seal kit:	RB600102
Installation torque:	55 - 62 Nm (41 - 46 ft-lb)
MTTFd:	150 - 1200 years: See technical spec.
Leakage:	120 cm^3/min (@46 cSt) 7,3 in^3/min (@46 cSt)

NOTES

For other configurations/quick codes not available in this catalogue page please consult factory

OPTIONS

Standard

Push and pull manual override

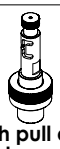

Push pull and twist manual override

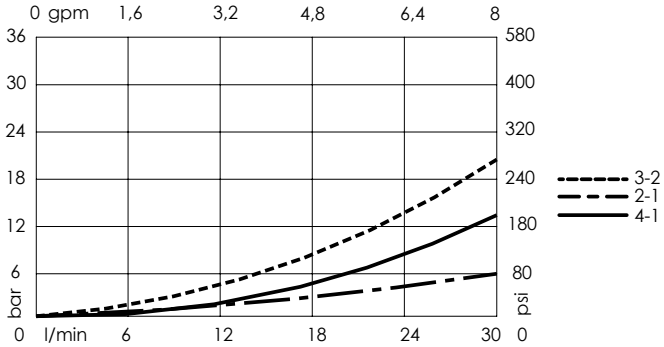

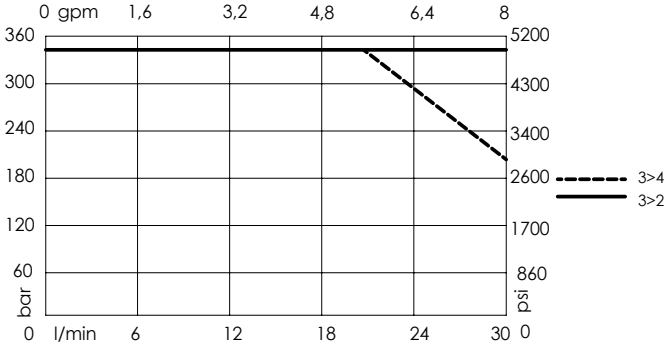

ORDERING CODES

Quick code	Description	Options	
CE001002	CEES-030-SEFN-52-S10-N350	Standard	
CE001003	CEES-030-SEFL-52-S10-N350	Push and pull manual override	
CE001004	CEES-030-SEFG-52-S10-N350	Push pull and twist manual override	

Revision C

SOLENOID OPERATED CARTRIDGE

CEES-030-SEFN-53

DIRECT OPERATED
SPOOL TYPE

ATLANTIC Fluid Tech
WWW.SUMY.IR

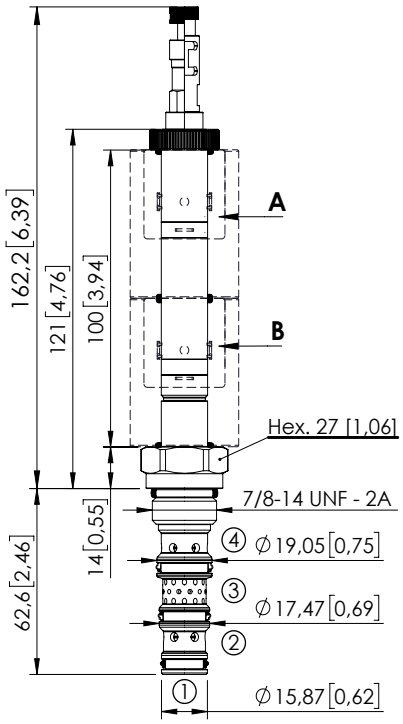

Dimensions: mm [inches]

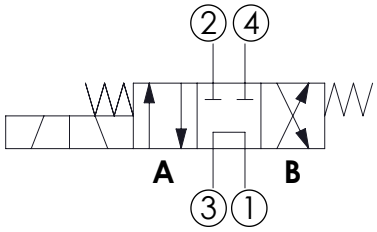

SPECIFICATIONS

Max. operating pressure:	350 bar (5000 psi)
Max. operating pressure on port 1:	250 bar (3600 psi)
Rated flow:	30 l/min (8 gpm)
Cavity:	SAE-10-4N
Weight:	0,2 kg (0,68 lbs)
Min. voltage required:	90% of nominal
Coil type:	M16 type
Ambient temperature:	-20/+50 °C (-4/+122 °F)
Contamination class to ISO 4406:	See technical spec.
Seal kit:	RB600102
Installation torque:	55 - 62 Nm (41 - 46 ft-lb)
MTTFd:	150 - 1200 years: See technical spec.
Leakage:	120 cm³/min (@46 cSt) 7,3 in³/min (@46 cSt)

NOTES

For other configurations/quick codes not available in this catalogue page please consult factory

OPTIONS

Standard

Push and pull manual override

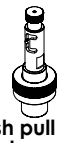

Push pull and twist manual override

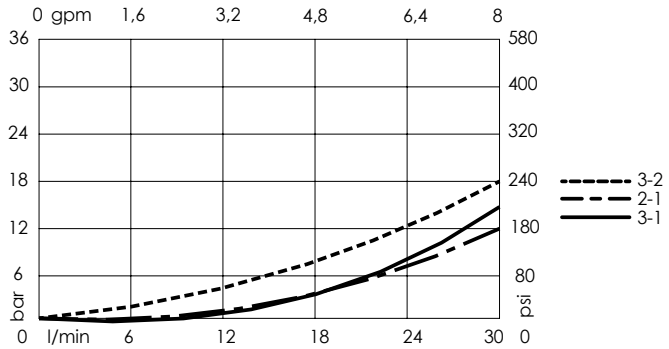

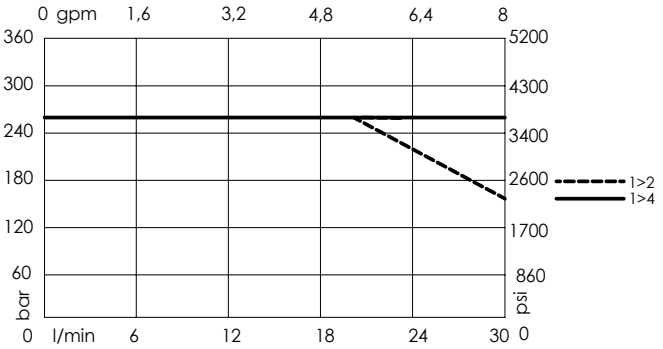

ORDERING CODES

Quick code	Description	Options	
CE001005	CEES-030-SEFN-53-S10-N350	Standard	
CE001006	CEES-030-SEFL-53-S10-N350	Push and pull manual override	
CE001007	CEES-030-SEFG-53-S10-N350	Push pull and twist manual override	

Revision C

SOLENOID OPERATED CARTRIDGE

CEES-030-SEFN-54

DIRECT OPERATED
SPOOL TYPE

ATLANTIC Fluid Tech
WWW.SUMY.IR

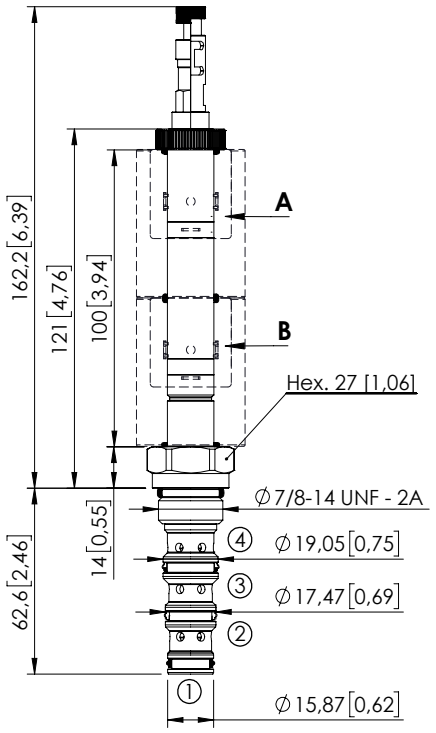

Dimensions: mm [inches]

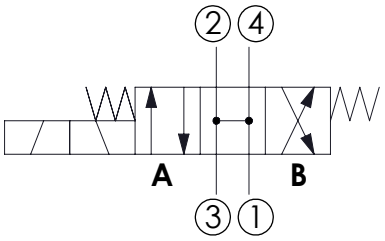

SPECIFICATIONS

Max. operating pressure:	350 bar (5000 psi)
Max. operating pressure on port 1:	250 bar (3600 psi)
Rated flow:	30 l/min (8 gpm)
Cavity:	SAE-10-4N
Weight:	0,2 kg (0,68 lbs)
Min. voltage required:	90% of nominal
Coil type:	M16 type
Ambient temperature:	-20/+50 °C (-4/+122 °F)
Contamination class to ISO 4406:	See technical spec.
Seal kit:	RB600102
Installation torque:	55 - 62 Nm (41 - 46 ft-lb)
MTTFd:	150 - 1200 years: See technical spec.
Leakage:	120 cm^3/min (@46 cSt) 7,3 in^3/min (@46 cSt)

NOTES

For other configurations/quick codes not available in this catalogue page please consult factory

OPTIONS

Standard

Push and pull manual override

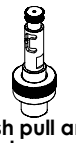

Push pull and twist manual override

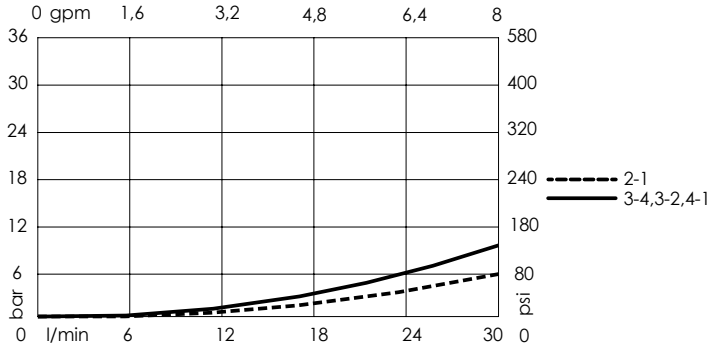

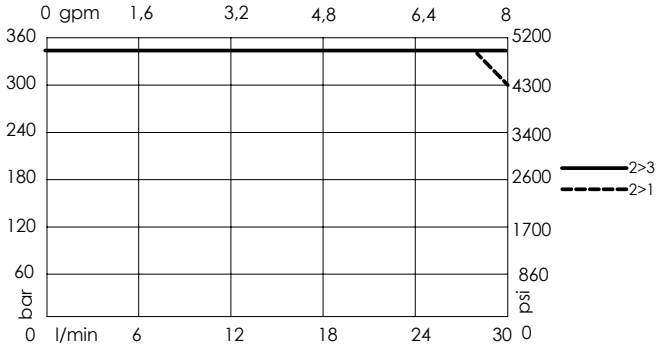

ORDERING CODES

Quick code	Description	Options	
CE001008	CEES-030-SEFN-54-S10-N350	Standard	
CE001009	CEES-030-SEFL-54-S10-N350	Push and pull manual override	
CE001010	CEES-030-SEFG-54-S10-N350	Push pull and twist manual override	

Revision C

SOLENOID OPERATED CARTRIDGE

CEFS-010-SEFN-104

DIRECT OPERATED
SPOOL TYPE

ATLANTIC
Fluid Tech
WWW.SUMY.IR

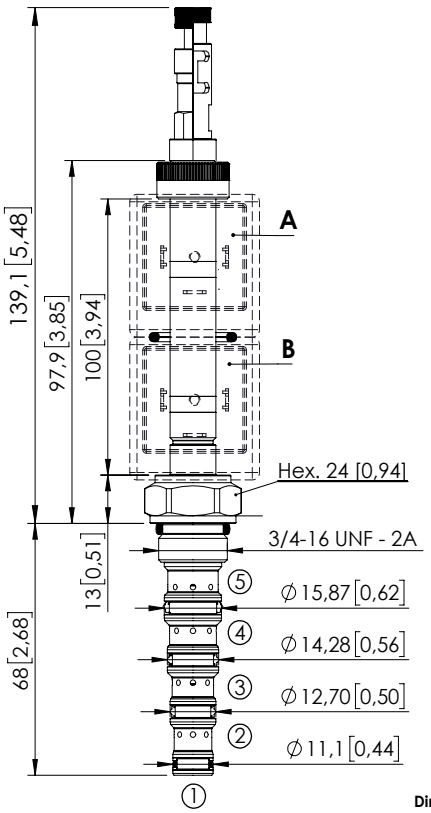

Dimensions: mm [inches]

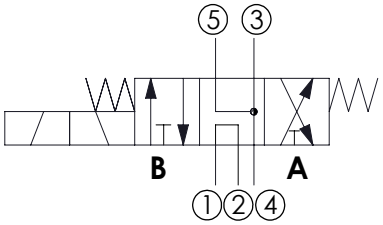

SPECIFICATIONS

Max. operating pressure:	350 bar (5000 psi)
Max. operating pressure on port 1:	210 bar (3000 psi)
Rated flow:	10 l/min (3 gpm)
Cavity:	SAE-08-5N
Weight:	0,25 kg (0,68 lbs)
Min. voltage required:	90% of nominal
Coil type:	M7 or M3 type
Ambient temperature:	-20/+50 °C (-4/+122 °F)
Contamination class to ISO 4406:	See technical spec.
Seal kit:	RB900106
Installation torque:	45 - 50 Nm (41 - 46 ft-lb)
MTTFd:	150 - 1200 years: See technical spec.
Leakage:	120 cm³/min (@46 cSt) 7,3 in³/min (@46 cSt)

NOTES

For other configurations/quick codes not available in this catalogue page please consult factory

OPTIONS

Standard

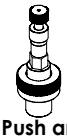

Push and pull manual override

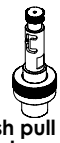

Push pull and twist manual override

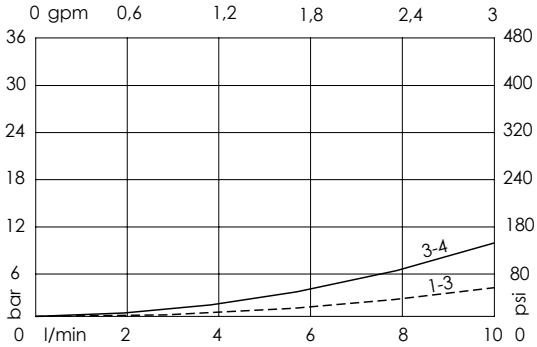

ORDERING CODES

Quick code	Description	Options	
CE001808	CEFS-010-SEFN-104-S08-N350	Standard	
CE001809	CEFS-010-SEFL-104-S08-N350	Push and pull manual override	
CE001810	CEFS-010-SEFG-104-S08-N350	Push pull and twist manual override	

Revision A

SOLENOID OPERATED CARTRIDGE

CEFS-010-SEFN-106

DIRECT OPERATED
SPOOL TYPE

ATLANTIC
Fluid Tech
WWW.SUMY.IR

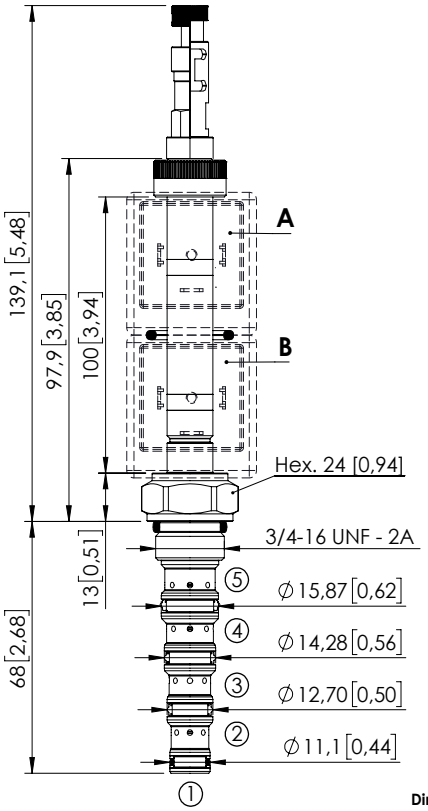

Dimensions: mm [inches]

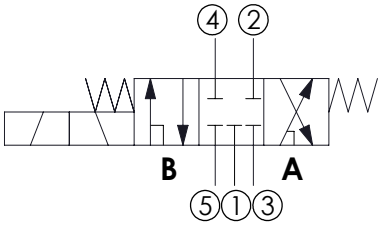

SPECIFICATIONS

Max. operating pressure:	350 bar (5000 psi)
Max. operating pressure on port 1:	210 bar (3000 psi)
Rated flow:	10 l/min (3 gpm)
Cavity:	SAE-08-5N
Weight:	0,25 kg (0,68 lbs)
Min. voltage required:	90% of nominal
Coil type:	M7 or M3 type
Ambient temperature:	-20/+50 °C (-4/+122 °F)
Contamination class to ISO 4406:	See technical spec.
Seal kit:	RB900106
Installation torque:	45 - 50 Nm (41 - 46 ft-lb)
MTTFd:	150 - 1200 years: See technical spec.
Leakage:	120 cm^3/min (@46 cSt) 7,3 in^3/min (@46 cSt)

NOTES

For other configurations/quick codes not available in this catalogue page please consult factory

OPTIONS

Standard

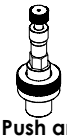

Push and pull manual override

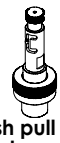

Push pull and twist manual override

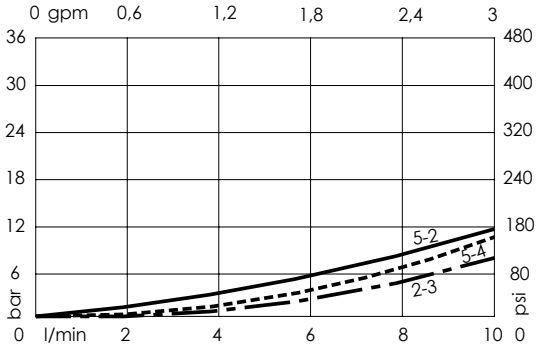

ORDERING CODES

Quick code	Description	Options	
CE001814	CEFS-010-SEFN-106-S08-N350	Standard	
CE001815	CEFS-010-SEFL-106-S08-N350	Push and pull manual override	
CE001816	CEFS-010-SEFG-106-S08-N350	Push pull and twist manual override	

Revision A

SOLENOID OPERATED CARTRIDGE

CEFS-010-SEFN-107

DIRECT OPERATED
SPOOL TYPE

ATLANTIC Fluid Tech
WWW.SUMY.IR

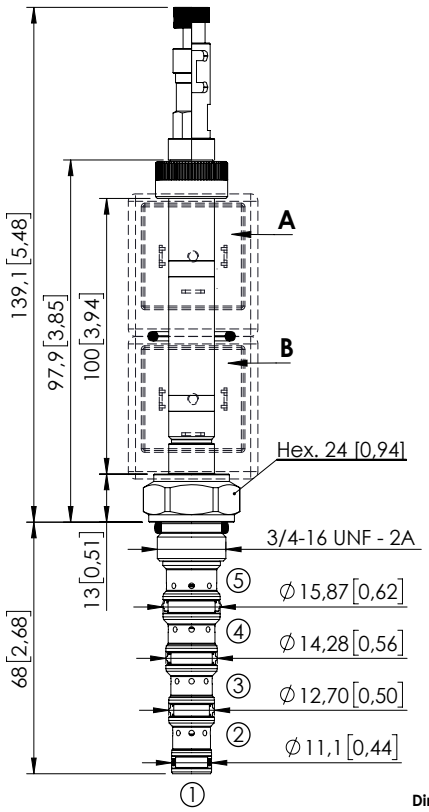

Dimensions: mm [inches]

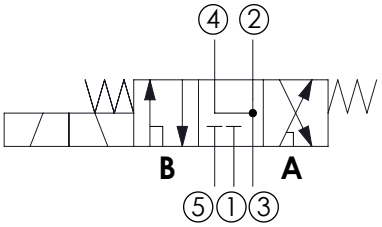

SPECIFICATIONS

Max. operating pressure:	350 bar (5000 psi)
Max. operating pressure on port 1:	210 bar (3000 psi)
Rated flow:	10 l/min (3 gpm)
Cavity:	SAE-08-5N
Weight:	0.25 kg (0,68 lbs)
Min. voltage required:	90% of nominal
Coil type:	M7 or M3 type
Ambient temperature:	-20/+50 °C (-4/+122 °F)
Contamination class to ISO 4406:	See technical spec.
Seal kit:	RB900106
Installation torque:	45 - 50 Nm (41 - 46 ft-lb)
MTTFd:	150 - 1200 years: See technical spec.
Leakage:	120 cm³/min (@46 cSt) 7,3 in³/min (@46 cSt)

NOTES

For other configurations/quick codes not available in this catalogue page please consult factory

OPTIONS

Standard

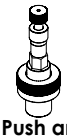

Push and pull manual override

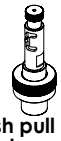

Push pull and twist manual override

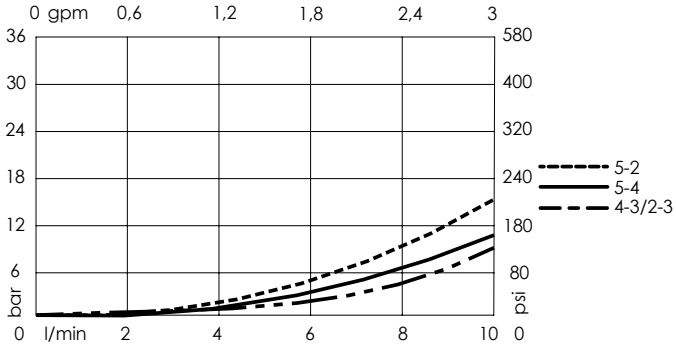

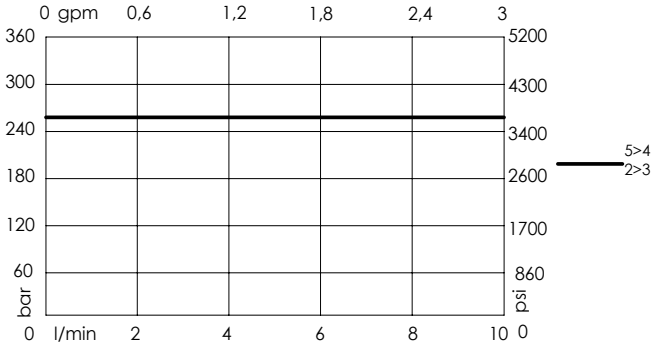

ORDERING CODES

Quick code	Description	Options
CE001817	CEFS-010-SEFN-107-S08-N350	Standard
CE001818	CEFS-010-SEFL-107-S08-N350	Push and pull manual override
CE001819	CEFS-010-SEFG-107-S08-N350	Push pull and twist manual override

Revision B

SOLENOID OPERATED CARTRIDGE

CEFS-010-SEFN-108

DIRECT OPERATED
SPOOL TYPE

ATLANTIC Fluid Tech
WWW.SUMY.IR

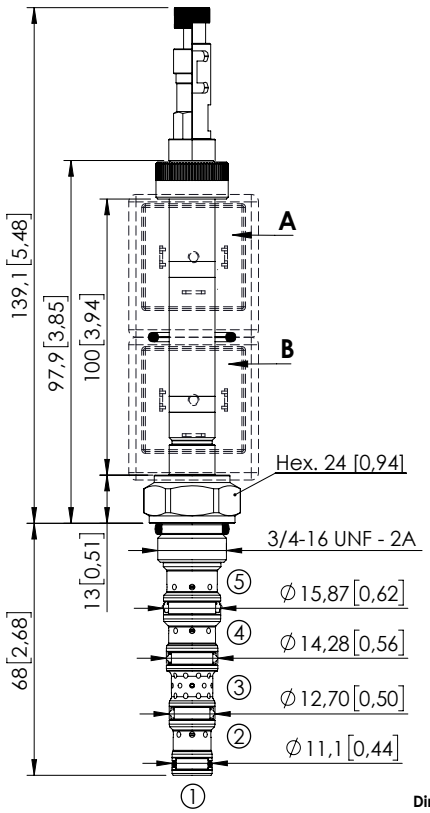

Dimensions: mm [inches]

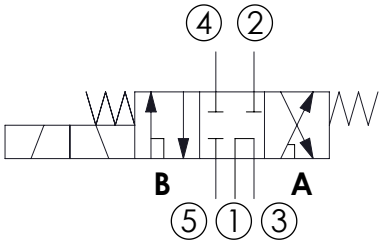

SPECIFICATIONS

Max. operating pressure:	350 bar (5000 psi)
Max. operating pressure on port 1:	210 bar (3000 psi)
Rated flow:	10 l/min (3 gpm)
Cavity:	SAE-08-5N
Weight:	0.25 kg (0,68 lbs)
Min. voltage required:	90% of nominal
Coil type:	M7 or M3 type
Ambient temperature:	-20/+50 °C (-4/+122 °F)
Contamination class to ISO 4406:	See technical spec.
Seal kit:	RB900106
Installation torque:	45 - 50 Nm (41 - 46 ft-lb)
MTTFd:	150 - 1200 years: See technical spec.
Leakage:	120 cm³/min (@46 cSt) 7,3 in³/min (@46 cSt)

NOTES

For other configurations/quick codes not available in this catalogue page please consult factory

OPTIONS

Standard

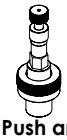

Push and pull manual override

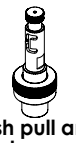

Push pull and twist manual override

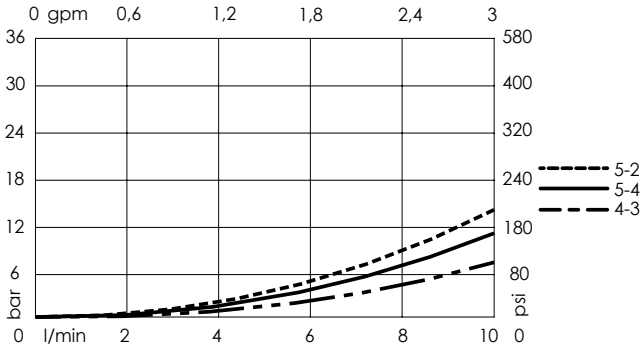

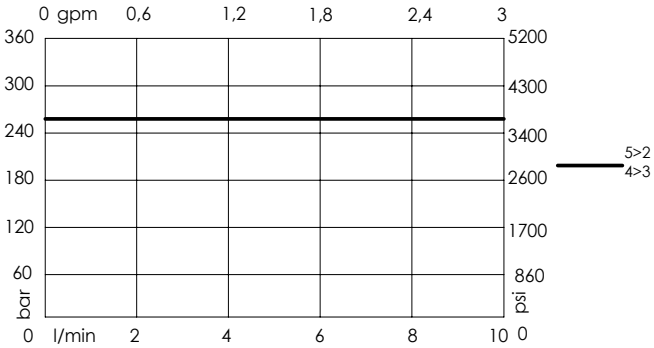

ORDERING CODES

Quick code	Description	Options	
CE001820	CEFS-010-SEFN-108-S08-N350	Standard	
CE001821	CEFS-010-SEFL-108-S08-N350	Push and pull manual override	
CE001822	CEFS-010-SEFG-108-S08-N350	Push pull and twist manual override	

Revision B

SOLENOID OPERATED CARTRIDGE

CEFS-010-SEFN-115

DIRECT OPERATED
SPOOL TYPE

ATLANTIC
Fluid Tech
WWW.SUMY.IR

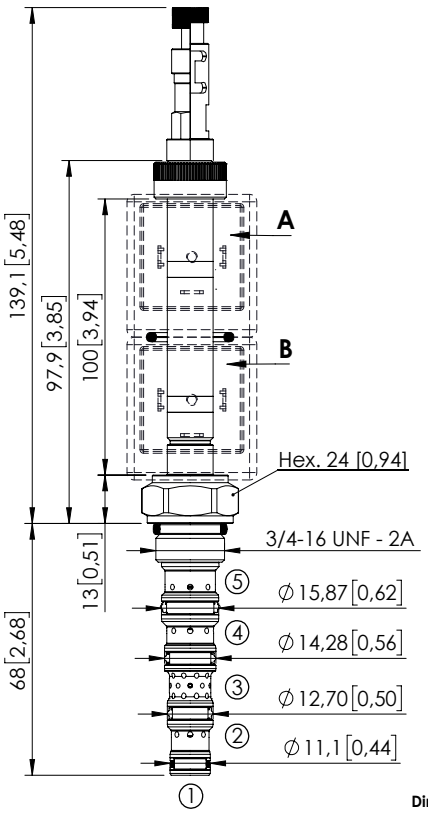

Dimensions: mm [inches]

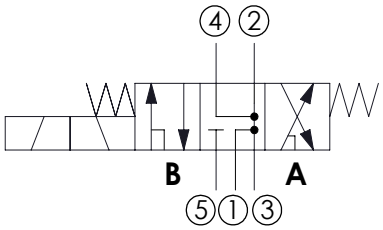

SPECIFICATIONS

Max. operating pressure:	350 bar (5000 psi)
Max. operating pressure on port 1:	210 bar (3000 psi)
Rated flow:	10 l/min (3 gpm)
Cavity:	SAE-08-5N
Weight:	0,25 kg (0,68 lbs)
Min. voltage required:	90% of nominal
Coil type:	M7 or M6 type
Ambient temperature:	-20/+50 °C (-4/+122 °F)
Contamination class to ISO 4406:	See technical spec.
Seal kit:	RB900106
Installation torque:	45 - 50 Nm (41 - 46 ft-lb)
MTTFd:	150 - 1200 years: See technical spec.
Leakage:	120 cm³/min (@46 cSt) 7,3 in³/min (@46 cSt)

NOTES

For other configurations/quick codes not available in this catalogue page please consult factory

OPTIONS

Standard

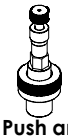

Push and pull manual override

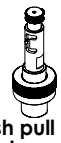

Push pull and twist manual override

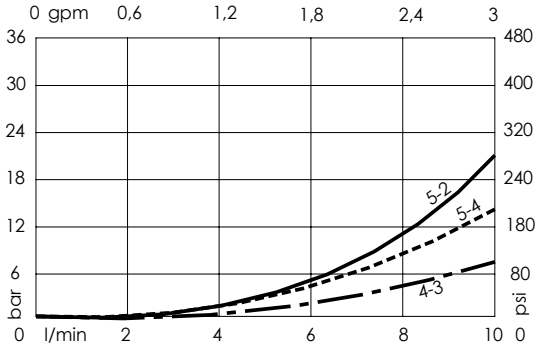

ORDERING CODES

Quick code	Description	Options	
CE001823	CEFS-010-SEFN-115-S08-N350	Standard	
CE001824	CEFS-010-SEFL-115-S08-N350	Push and pull manual override	
CE001825	CEFS-010-SEFG-115-S08-N350	Push pull and twist manual override	

Revision A

SOLENOID OPERATED CARTRIDGE

CEFS-030-SEFN-104

DIRECT OPERATED
SPOOL TYPE

ATLANTIC
Fluid Tech
WWW.SUMY.IR

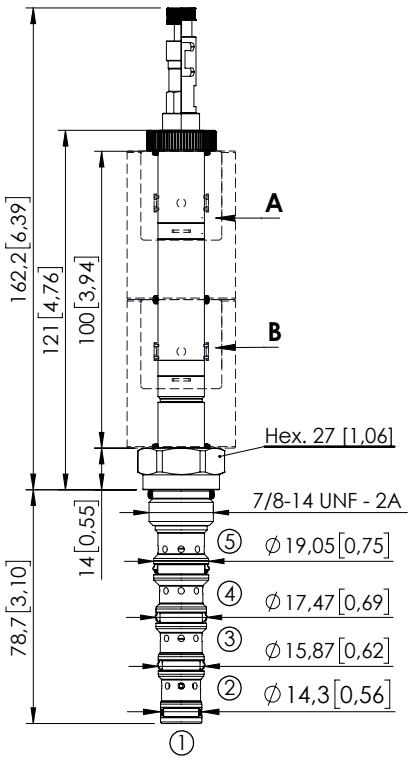

Dimensions: mm [inches]

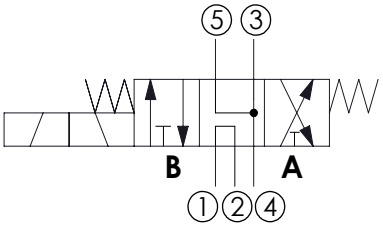

SPECIFICATIONS

Max. operating pressure:	350 bar (5000 psi)
Max. operating pressure on port 1:	210 bar (3000 psi)
Rated flow:	30 l/min (8 gpm)
Cavity:	SAE-10-5N
Weight:	0,22 kg (0,68 lbs)
Min. voltage required:	90% of nominal
Coil type:	M16 type
Ambient temperature:	-20/+50 °C (-4/+122 °F)
Contamination class to ISO 4406:	See technical spec.
Seal kit:	RB900107
Installation torque:	55 - 62 Nm (41 - 46 ft-lb)
MTTFd:	150 - 1200 years: See technical spec.
Leakage:	120 cm^3/min (@46 cSt) 7,3 in^3/min (@46 cSt)

NOTES

For other configurations/quick codes not available in this catalogue page please consult factory

OPTIONS

Standard

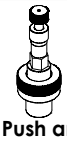

Push and pull manual override

Push pull and twist manual override

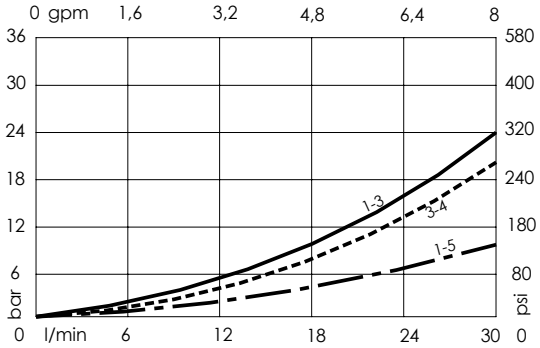

ORDERING CODES

Quick code	Description	Options	
CE000795	CEFS-030-SEFN-104-S10-N350	Standard	
CE001011	CEFS-030-SEFL-104-S10-N350	Push and pull manual override	
CE001012	CEFS-030-SEFG-104-S10-N350	Push pull and twist manual override	

Revision D

SOLENOID OPERATED CARTRIDGE

CEFS-030-SEFN-106

DIRECT OPERATED
SPOOL TYPE

ATLANTIC Fluid Tech
WWW.SUMY.IR

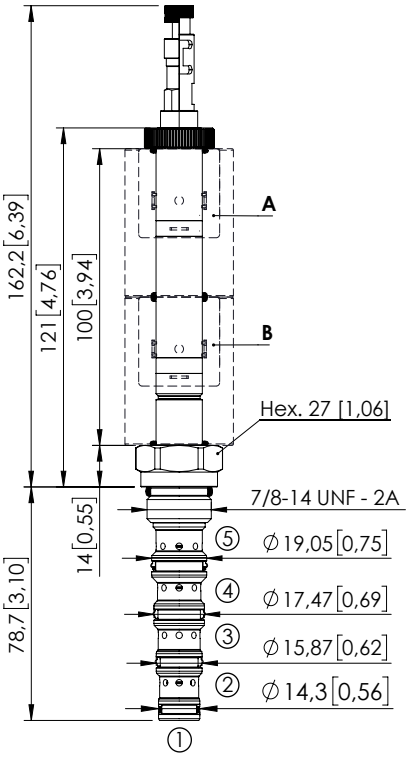

Dimensions: mm [inches]

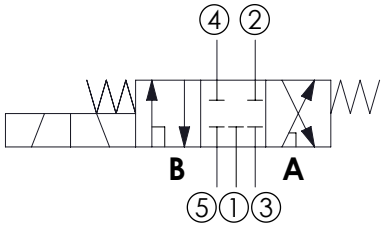

SPECIFICATIONS

Max. operating pressure:	350 bar (5000 psi)
Max. operating pressure on port 1:	250 bar (3600 psi)
Rated flow:	30 l/min (8 gpm)
Cavity:	SAE 10 5N
Weight:	0.22 kg (0,68 lbs)
Min. voltage required:	90% of nominal
Coil type:	M16 type
Ambient temperature:	-20/+50 °C (-4/+122 °F)
Contamination class to ISO 4406:	See technical spec.
Seal kit:	RB900107
Installation torque:	55 - 62 Nm (41 - 46 ft-lb)
MTTFd:	150 - 1200 years: See technical spec.
Leakage:	120 cm³/min (@46 cSt) 7,3 in³/min (@46 cSt)

NOTES

For other configurations/quick codes not available in this catalogue page please consult factory

OPTIONS

Standard

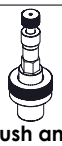

Push and pull manual override

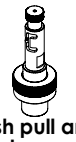

Push pull and twist manual override

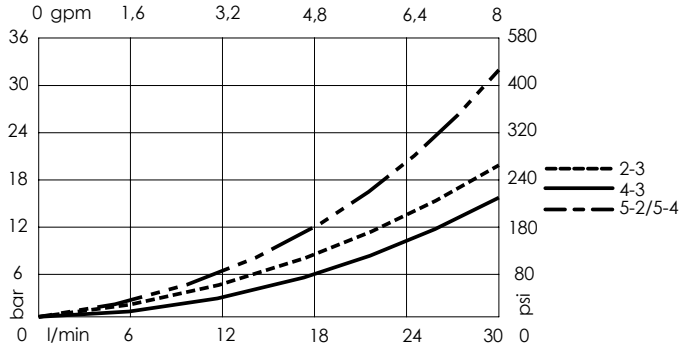

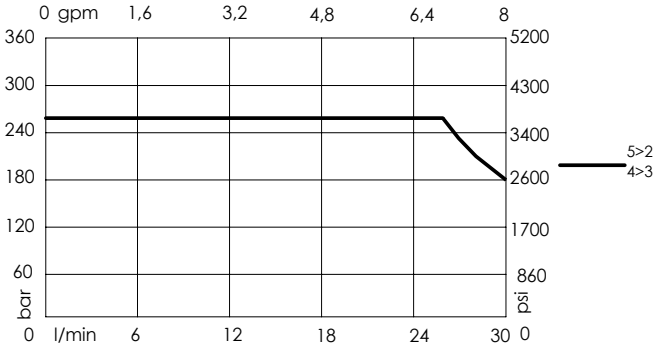

ORDERING CODES

Quick code	Description	Options
CE000794	CEFS-030-SEFN-106-S10-N350	Standard
CE001015	CEFS-030-SEFL-106-S10-N350	Push and pull manual override
CE001016	CEFS-030-SEFG-106-S10-N350	Push pull and twist manual override

Revision E

SOLENOID OPERATED CARTRIDGE

CEFS-030-SEFN-107

DIRECT OPERATED
SPOOL TYPE

ATLANTIC Fluid Tech
WWW.SUMY.IR

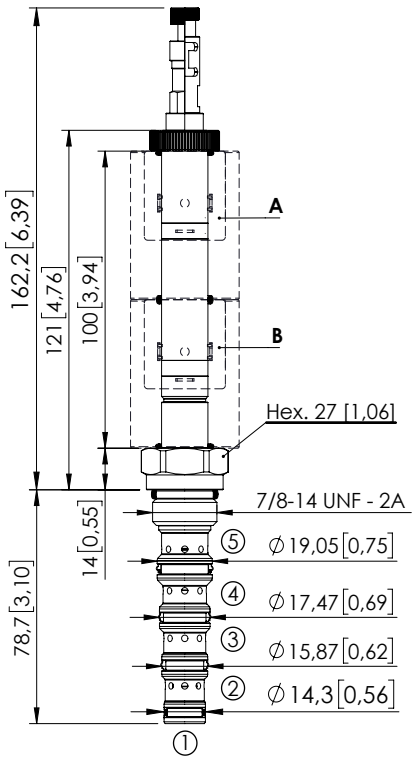

Dimensions: mm [inches]

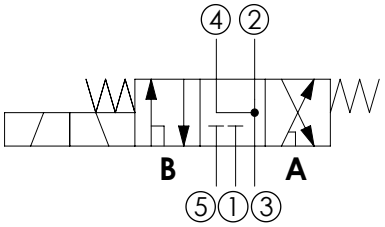

SPECIFICATIONS

Max. operating pressure:	350 bar (5000 psi)
Max. operating pressure on port 1:	250 bar (3600 psi)
Rated flow:	30 l/min (8 gpm)
Cavity:	SAE 10 5N
Weight:	0.22 kg (0,68 lbs)
Min. voltage required:	90% of nominal
Coil type:	M16 type
Ambient temperature:	-20/+50 °C (-4/+122 °F)
Contamination class to ISO 4406:	See technical spec.
Seal kit:	RB900107
Installation torque:	55 - 62 Nm (41 - 46 ft-lb)
MTTFd:	150 - 1200 years: See technical spec.
Leakage:	120 cm^3/min (@46 cSt) 7,3 in^3/min (@46 cSt)

NOTES

For other configurations/quick codes not available in this catalogue page please consult factory

OPTIONS

Standard

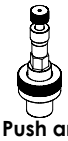

Push and pull manual override

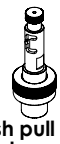

Push pull and twist manual override

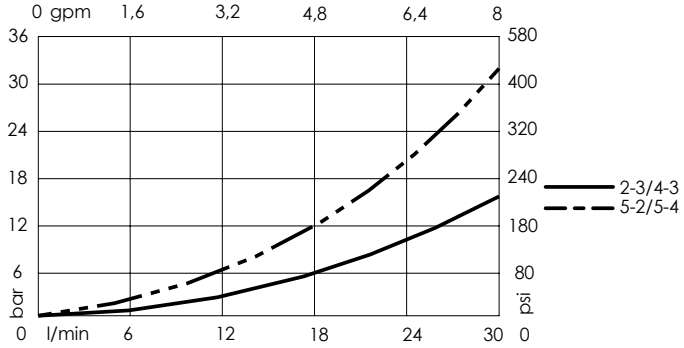

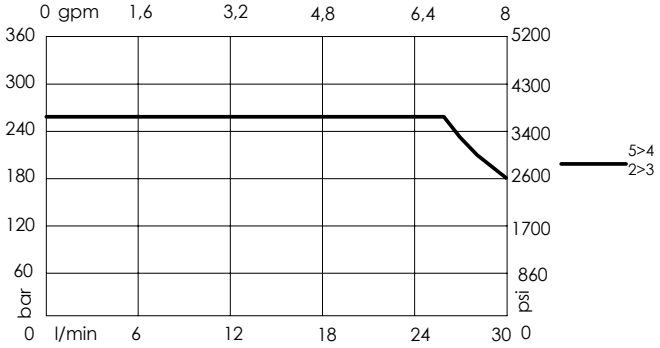

ORDERING CODES

Quick code	Description	Options	
CE000793	CEFS-030-SEFN-107-S10-N350	Standard	
CE001017	CEFS-030-SEFL-107-S10-N350	Push and pull manual override	
CE001018	CEFS-030-SEFG-107-S10-N350	Push pull and twist manual override	

Revision E

SOLENOID OPERATED CARTRIDGE

CEFS-030-SEFN-108

DIRECT OPERATED
SPOOL TYPE

ATLANTIC Fluid Tech
WWW.SUMY.IR

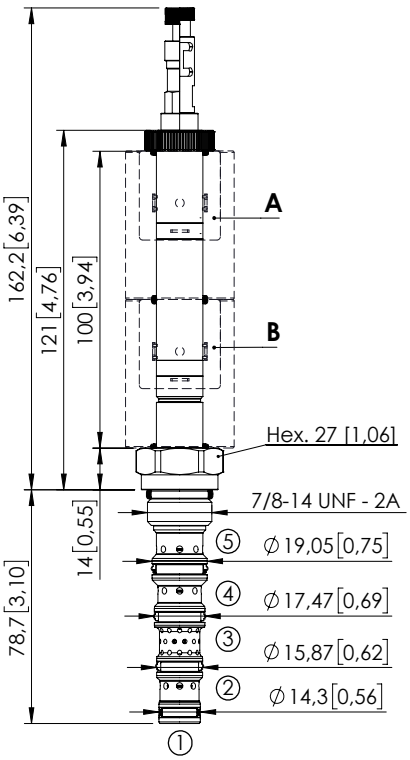

Dimensions: mm [inches]

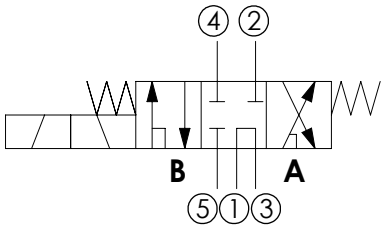

SPECIFICATIONS

Max. operating pressure:	350 bar (5000 psi)
Max. operating pressure on port 1:	250 bar (3600 psi)
Rated flow:	30 l/min (8 gpm)
Cavity:	SAE 10 5N
Weight:	0,22 kg (0,48 lbs)
Min. voltage required:	90% of nominal
Coil type:	M16 type
Ambient temperature:	-20/+50 °C (-4/+122 °F)
Contamination class to ISO 4406:	See technical spec.
Seal kit:	RB900107
Installation torque:	55 - 62 Nm (41 - 46 ft-lb)
MTTFd:	150 - 1200 years: See technical spec.
Leakage:	120 cm³/min (@46 cSt) 7,3 in³/min (@46 cSt)

NOTES

For other configurations/quick codes not available in this catalogue page please consult factory

OPTIONS

Standard

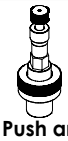

Push and pull manual override

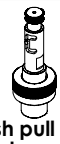

Push pull and twist manual override

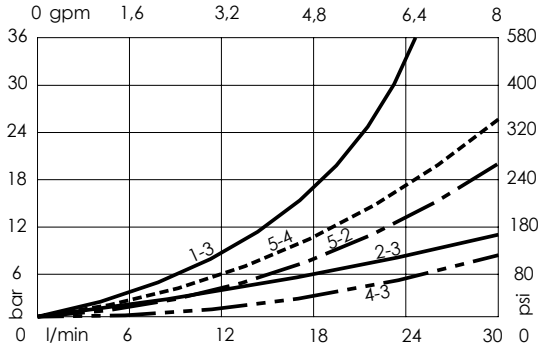

ORDERING CODES

Quick code	Description	Options	
CE000792	CEFS-030-SEFN-108-S10-N350	Standard	
CE001019	CEFS-030-SEFL-108-S10-N350	Push and pull manual override	
CE001020	CEFS-030-SEFG-108-S10-N350	Push pull and twist manual override	

Revision D

SOLENOID OPERATED CARTRIDGE

CEFS-030-SEFN-115

DIRECT OPERATED
SPOOL TYPE

ATLANTIC Fluid Tech
WWW.SUMY.IR

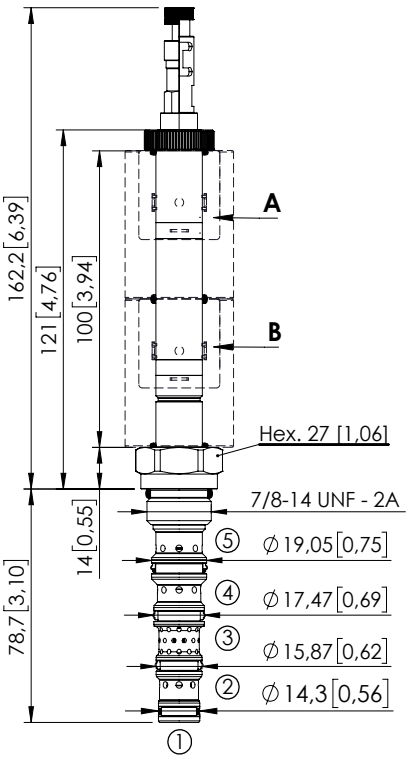

Dimensions: mm [inches]

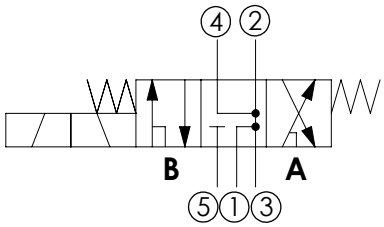

SPECIFICATIONS

Max. operating pressure:	350 bar (5000 psi)
Max. operating pressure on port 1:	210 bar (3000 psi)
Rated flow:	30 l/min (8 gpm)
Cavity:	SAE 10 5N
Weight:	0,22 kg (0,68 lbs)
Min. voltage required:	90% of nominal
Coil type:	M16 type
Ambient temperature:	-20/+50 °C (-4/+122 °F)
Contamination class to ISO 4406:	See technical spec.
Seal kit:	RB900107
Installation torque:	55 - 62 Nm (41 - 46 ft-lb)
MTTFd:	150 - 1200 years: See technical spec.
Leakage:	120 cm³/min (@46 cSt) 7,3 in³/min (@46 cSt)

NOTES

For other configurations/quick codes not available in this catalogue page please consult factory

OPTIONS

Standard

Push and pull manual override

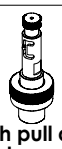

Push pull and twist manual override

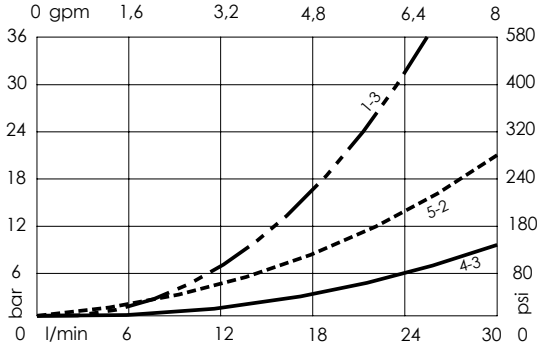

ORDERING CODES

Quick code	Description	Options	
CE001027	CEFS-030-SEFN-115-S10-N350	Standard	
CE001028	CEFS-030-SEFL-115-S10-N350	Push and pull manual override	
CE001029	CEFS-030-SEFG-115-S10-N350	Push pull and twist manual override	

Revision C

ATLANTIC
Fluid Tech
WWW.SUMY.IR

SECTION 9

Proportional Cartridges

SECTION 9

PROPORTIONAL CARTRIDGES

ATLANTIC Fluid Tech
WWW.SUMY.IR

Hydraulic scheme	Valve description	Valve type	Rated flow l/min (gpm)	Max. pressure bar (psi)	Installation	Main port size or cavity type	Page
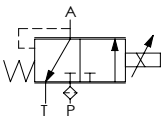	CECS-005-PRPN	Proportional, direct operated, pressure reducing	5 (1,3)	50 (700)	DT04-2P	VP000371	9.01.**010**
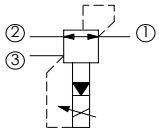	CECT-080-PRPS	Proportional, pilot operated, reducing and relieving	80 (21)	250 (3600)	Cartridge	SAE-10-3N	9.02.**020**
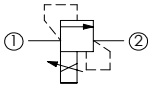	CEBD-005-PLPS	Proportional, poppet type relief	5 (1,3)	350 (5000)	Cartridge	SAE-08-2N	9.03.**030**
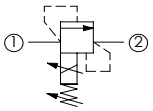	CEBD-001-PMPS	Proportional, poppet type relief, for inverse controlled	0,6 (0,1)	350 (5000)	Cartridge	SAE-08-2N	9.04.**040**
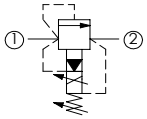	CEBT-120-PMPS	Proportional, pilot operated, relieving, for fan drive	120 (32)	350 (5000)	Cartridge	SAE-10-2N	9.05.**050**
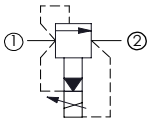	CEBT-120-PLPS	Proportional, pilot operated, relieving	120 (32)	350 (5000)	Cartridge	SAE-10-2N	9.06.**060**
	CEBT-300-PLPS	Proportional, pilot operated, relieving	300 (79)	350 (5000)	Cartridge	SAE-16-2N	9.06.**070**
	CEBT-500-PLPS	Proportional, pilot operated, relieving	500 (132)	350 (5000)	Cartridge	SAE-20-2N	9.06.**080**
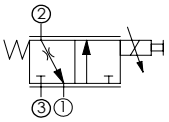	CECS-020-FSPS	Proportional, non compensated, flow regulator	20 (5)	210 (3000)	Cartridge	SAE-10-3N	9.07.**090**
	CECS-030-FSPS	Proportional, non compensated, flow regulator	30 (8)	210 (3000)	Cartridge	SAE-10-3N	9.07.**090**
	CECS-040-FSPS	Proportional, non compensated, flow regulator	40 (11)	210 (3000)	Cartridge	SAE-10-3N	9.07.**090**
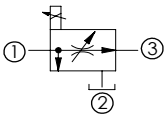	CECS-050-FRPM	Proportional, direct operated, flow regulator	50 (13)	320 (4600)	Cartridge	SAE-10-3N	9.08.**100**
	CECS-140-FRPM	Proportional, direct operated, flow regulator	140 (37)	320 (4600)	Cartridge	SAE-16-3N	9.08.**110**
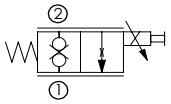	CEBD-020-PEPS	Proportional, normally closed	20 (5)	210 (3000)	Cartridge	SAE-08-2N	9.09.**120**
	CEBD-020-PEPS	Proportional, normally closed	20 (5)	210 (3000)	Cartridge	VP000064	9.09.**130**
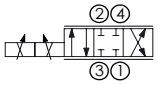	CEES-010-SEPN-51	Proportional, direct operated	10 (3)	350 (5000)	Cartridge	SAE-08-4N	9.10.**140**
	CEES-030-SEPN-51	Proportional, direct operated	30 (8)	350 (5000)	Cartridge	SAE-10-4N	9.10.**190**
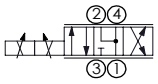	CEES-010-SEPN-52	Proportional, direct operated	10 (3)	350 (5000)	Cartridge	SAE-08-4N	9.11.**150**
	CEES-030-SEPN-52	Proportional, direct operated	30 (8)	350 (5000)	Cartridge	SAE-10-4N	9.11.**200**
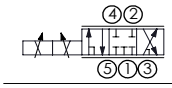	CEES-010-SEPN-106	Proportional, direct operated	10 (3)	350 (5000)	Cartridge	SAE-08-5N	9.12.**160**
	CEES-030-SEPN-106	Proportional, direct operated	30 (8)	350 (5000)	Cartridge	SAE-10-5N	9.12.**210**
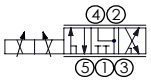	CEES-010-SEPN-107	Proportional, direct operated	10 (3)	350 (5000)	Cartridge	SAE-08-5N	9.13.**170**
	CEES-030-SEPN-107	Proportional, direct operated	30 (8)	350 (5000)	Cartridge	SAE-10-5N	9.13.**220**
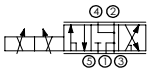	CEFS-010-SEPN-115	Proportional, direct operated	10 (3)	350 (5000)	Cartridge	SAE-08-5N	9.14.**180**
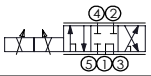	CEFS-030-SEPN-108	Proportional, direct operated	30 (8)	350 (5000)	Cartridge	SAE-10-5N	9.15.**230**
PROPORTIONAL CONTROLLER	ELPC-030-SCCB	Proportional electronic controller	-	-	DIN 43650	-	9.16.**240**

SOLENOID OPERATED CARTRIDGE

CECS-005-PRPN

PROPORTIONAL VALVES
DIRECT OPERATED
PRESSURE REDUCING

ATLANTIC Fluid Tech
WWW.SUMY.IR

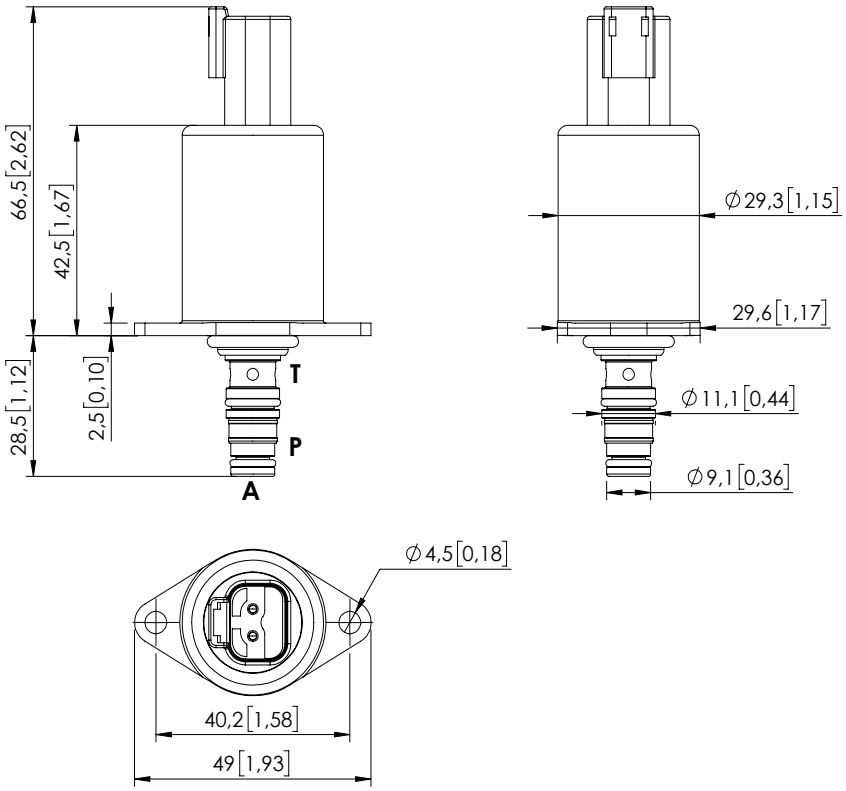

Dimensions: mm [inches]

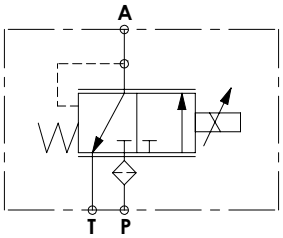

SPECIFICATIONS

Max. P pressure:	50 bar (700 psi)
Max. T pressure:	30 bar (400 psi)
Rated flow:	5 l/min (1,3 gpm)
Cavity:	VP000371
Weight:	0,2 kg (0,44 lbs)
Connector type:	Deutsch DT04-2P
Internal leakage:	15 cc/min @ 25 bar,46 cSt (0,9 in³/min @ 363 psi,46 cSt)
Protection class:	Up to IP6K6 / IPX9K
PWM range recommended:	100 Hz
Seal kit:	RC100371
Mounting screw torque:	3,5 Nm (2,5 ft-lb)
MTTFd:	150 - 1200 years: See technical spec.
Filter on P port:	125 µm

NOTES

Mounting screw not included
Mounting screw: 2 x M4x10 [M4x0,39] class 8.8

For other configurations/quick codes not available in this catalogue page please consult factory

CURVES

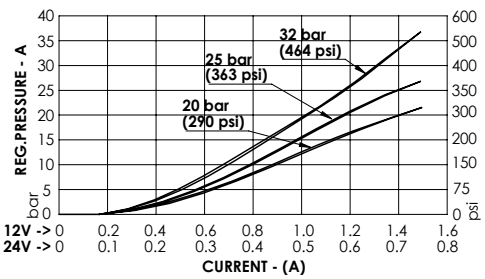

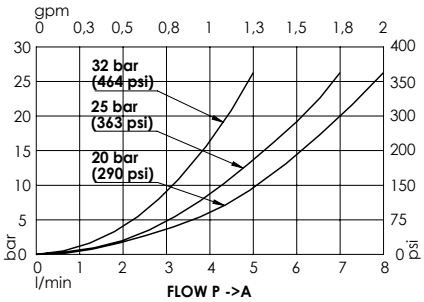

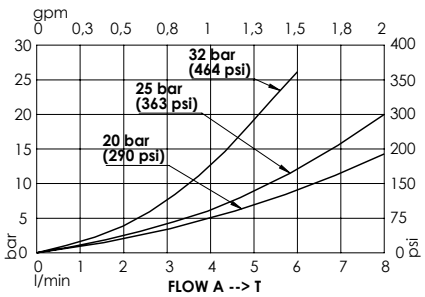

ORDERING CODES

Quick code	Description	Regulated pressure range	Voltage (V)	Current (mA)	Resistance (Ω) ± 5%	Hysteresis pA
CE000850	CECS-005-PRPN-95-371-N020-12DT	0-20 bar (0-290 psi)	12	1500	4.72	< 0.4 bar (< 5,8 psi)
CE000851	CECS-005-PRPN-95-371-N020-24DT	0-20 bar (0-290 psi)	24	750	20.8	< 0.4 bar (< 5,8 psi)
CE000852	CECS-005-PRPN-95-371-N025-12DT	0-25 bar (0-363 psi)	12	1500	4.72	< 0.5 bar (< 7,3 psi)
CE000853	CECS-005-PRPN-95-371-N025-24DT	0-25 bar (0-363 psi)	24	750	20.8	< 0.5 bar (< 7,3 psi)
CE000893	CECS-005-PRPN-95-371-N032-12DT	0-32 bar (0-464 psi)	12	1500	4.72	< 0.7 bar (< 10,2 psi)
CE000862	CECS-005-PRPN-95-371-N032-24DT	0-32 bar (0-464 psi)	24	750	20.8	< 0.7 bar (< 10,2 psi)

Revision A1

SOLENOID OPERATED CARTRIDGE

CECT-080-PRPS

PROPORTIONAL VALVES PILOTED OPERATED PRESSURE REDUCING AND RELIEVING

ATLANTIC Fluid Tech
WWW.SUMY.IR

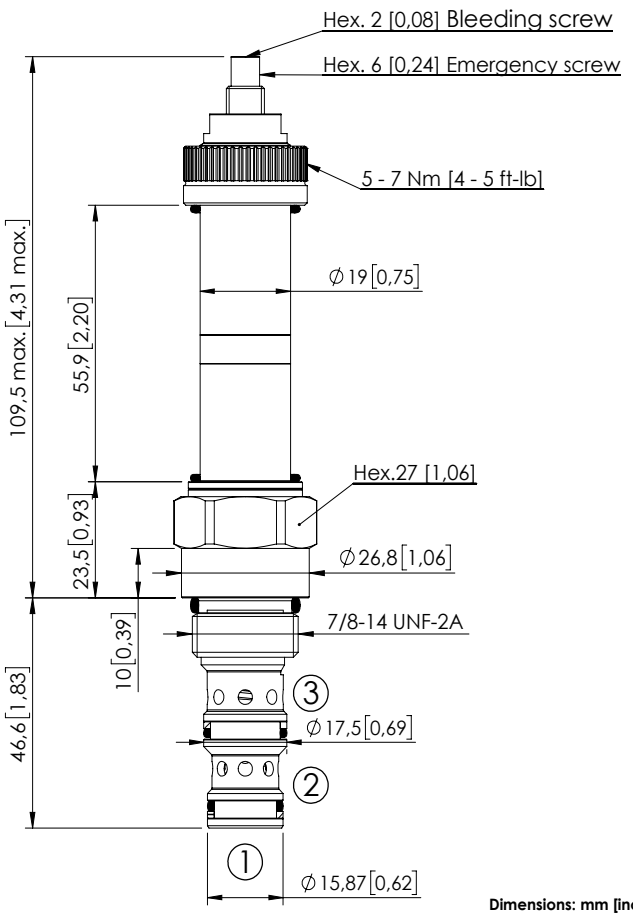

Dimensions: mm [inches]

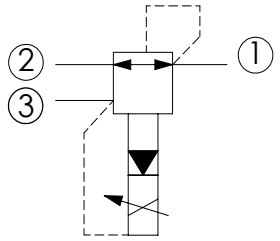

SPECIFICATIONS

Max. operating pressure:	250 bar (3600 psi)
Rated flow:	80 l/min (32 gpm)
Cavity:	SAE-10-3N
Weight:	0,33 kg (0,46 lbs)
Type hydraulic fluid:	See Technical specif.
Hydraulic fluid temp. range:	-30/+100 °C (-22/+212 °F)
Contamination class to ISO 4406:	See technical spec.
Coil type:	M15 type
Ambient temperature:	-20/+50 °C (-4/+122 °F)
PWM range recommended:	120-150 Hz
Installation torque:	55 - 62 Nm (41 - 46 ft-lb)
Seal kit:	RA100092
MTTFd:	150 - 1200 years: See technical spec.

NOTES

Bleed air before use

For other configurations/quick codes not available in this catalogue page please consult factory

CURVES

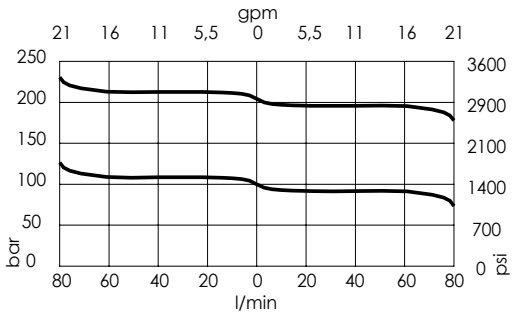

RELIEVING 1>3 FLOW - REDUCING 2>1

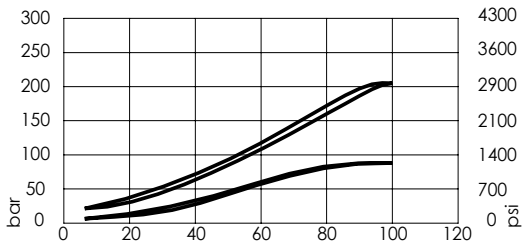

% MAX.CONTROL CURRENT - (I)

ORDERING CODES

Quick code	Description	Regulated pressure range	Threshold current (with12VDC coil)	Max control current (with 12V DC coil)	Override	
CE000122	CECT-080-PRPS-96-S10-V210	20-220 bar (300-3100 psi)	200 mA (+/-7%)	1700 mA (+/-7%)	Screw style	
CE000915	CECT-080-PRPS-96-S10-V080	4-80 bar (60-1200 psi)	200 mA (+/-7%)	1800 mA (+/-7%)	Screw style	

Revision B3

SOLENOID OPERATED CARTRIDGE

CEBD-005-PLPS

PROPORTIONAL VALVES
POPPET TYPE RELIEF

ATLANTIC Fluid Tech
WWW.SUMY.IR

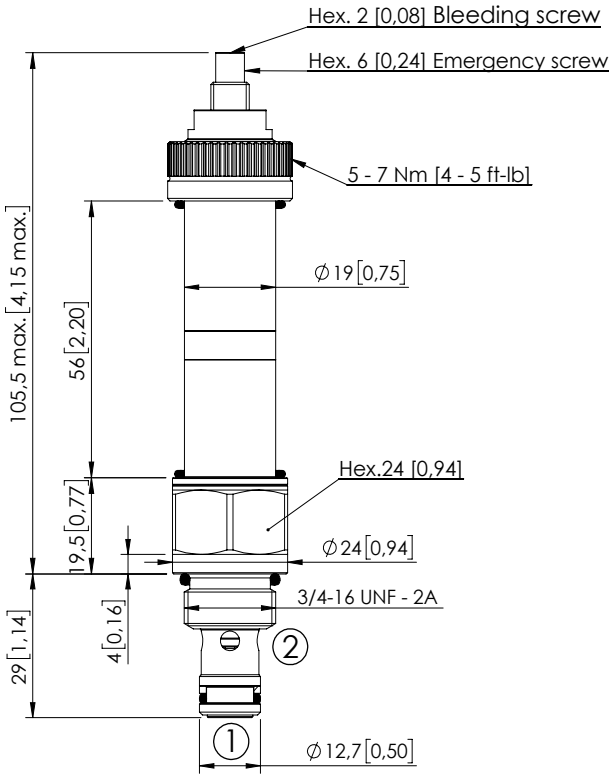

Dimensions: mm [inches]

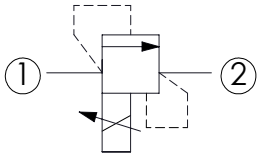

SPECIFICATIONS

Max. operating pressure:	350 bar (5000 psi)
Rated flow:	5 l/min (1,3 gpm)
Cavity:	SAE-08-2N
Weight:	0,27 kg (0,35 lbs)
Type hydraulic fluid:	See Technical specif.
Hydraulic fluid temp. range:	-30/+100 °C (-22/+212 °F)
Contamination class to ISO 4406:	See technical spec.
Coil type:	M15 type
Ambient temperature:	-20/+50 °C (-4/+122 °F)
PWM range recommended:	150-180 Hz
Installation torque:	45 - 50 Nm (33 - 37 ft-lb)
Seal kit:	RA100081
MTTFd:	150 - 1200 years: See technical spec.

NOTES

Bleed air before use

For other configurations/quick codes not available in this catalogue page please consult factory

CURVES

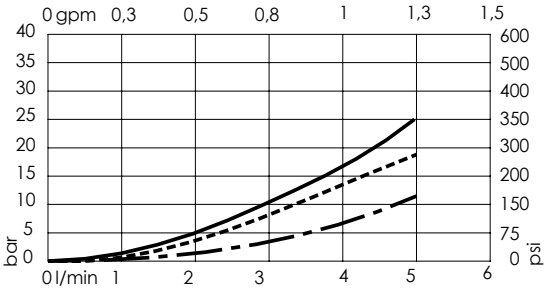

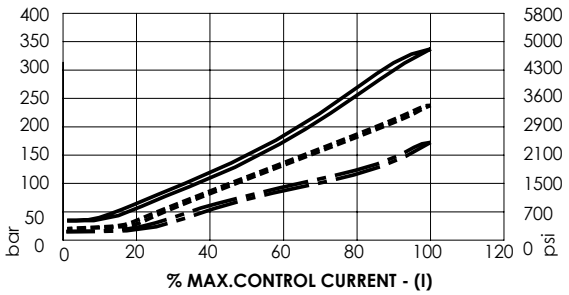

CE000910 ———— CE000911 ------- CE000912 —— - ——

ORDERING CODES

Quick code	Description	Setting range	Threshold current (with12VDC coil)	Max control current (with 12V DC coil)	Override	
CE000910	CEBD-005-PLPS-92-S08-V350	25-340 bar (350-4500 psi)	250 mA (+/-7%)	1800 mA (+/-7%)	Screw style	
CE000911	CEBD-005-PLPS-92-S08-V200	17-250 bar (250-3600 psi)	200 mA (+/-7%)	1800 mA (+/-7%)	Screw style	
CE000912	CEBD-005-PLPS-92-S08-V100	9-160 bar (130-2300 psi)	200 mA (+/-7%)	1800 mA (+/-7%)	Screw style	

Revision B3

SOLENOID OPERATED CARTRIDGE

CEBD-001-PMPS

PROPORTIONAL VALVES
POPPET TYPE RELIEF
SPOOL TYPE
FOR INVERSE CONTROLLED

ATLANTIC Fluid Tech
WWW.SUMY.IR

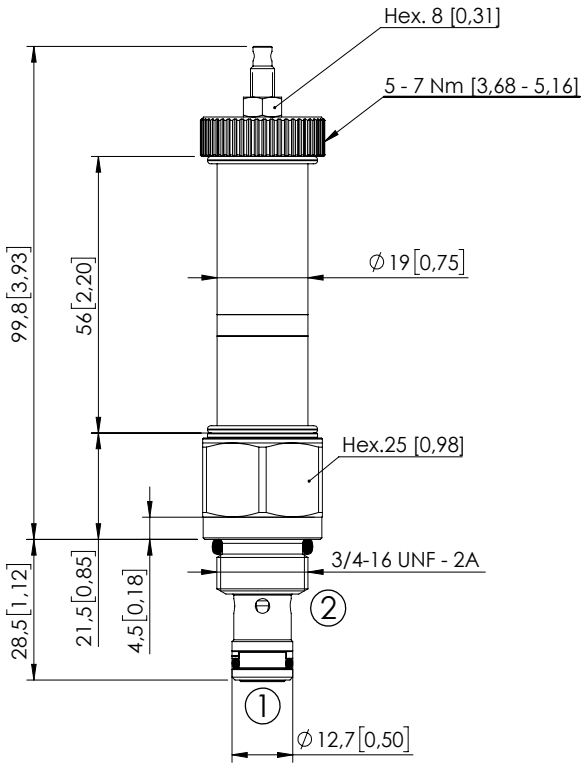

Dimensions: mm [inches]

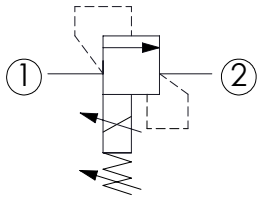

SPECIFICATIONS

Max. operating pressure:	320 bar (4600 psi)
Rated flow:	0,6 l/min (0,15 gpm)
Cavity:	SAE-08-2N
Weight:	0,12 kg (0,44 lbs)
Type hydraulic fluid:	See Technical specif.
Hydraulic fluid temp. range:	-30/+100 °C (-22/+212 °F)
Contamination class to ISO 4406:	See technical spec.
Coil type:	M15 type
Ambient temperature:	-20/+50 °C (-4/+122 °F)
PWM range recommended:	150-180 Hz
Installation torque:	45 - 50 Nm (33,2 - 36,9 ft-lb)
Seal kit:	RA100081
MTTFd:	150 - 1200 years: See technical spec.

NOTES

Pressure decreasing with current increasing.
Maximum pressure value can be adjusted manually within a range.

For other configurations/quick codes not available in this catalogue page please consult factory

CURVES

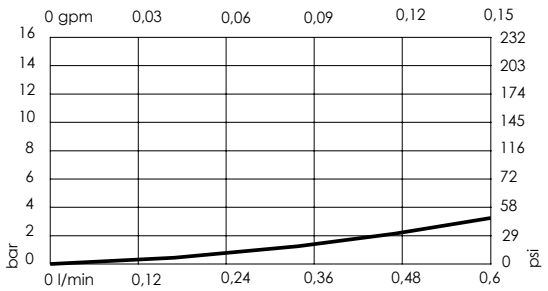

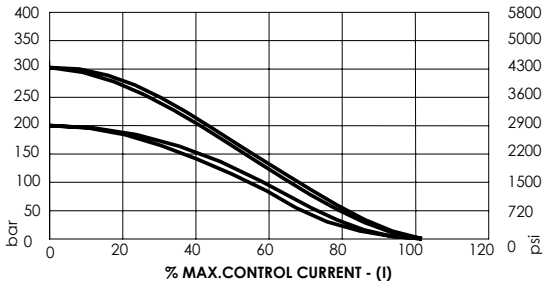

ORDERING CODES

Quick code	Description	Max. pressure setting range	Standard setting	Threshold current (with12VDC coil)	Max control current (with 12V DC coil)	Override
CE001120	CEBD-001-PMPS-92-S08-V320	200-320 bar (2900-4600 psi)	210 bar (3000 psi)	200 mA (+/-7%)	1600 mA (+/-7%)	Screw style

Revision B

SOLENOID OPERATED CARTRIDGE

CEBT-120-PMPS

PROPORTIONAL VALVES
POPPET TYPE RELIEF
SPOOL TYPE
FOR INVERSE CONTROLLED

ATLANTIC Fluid Tech
WWW.SUMY.IR

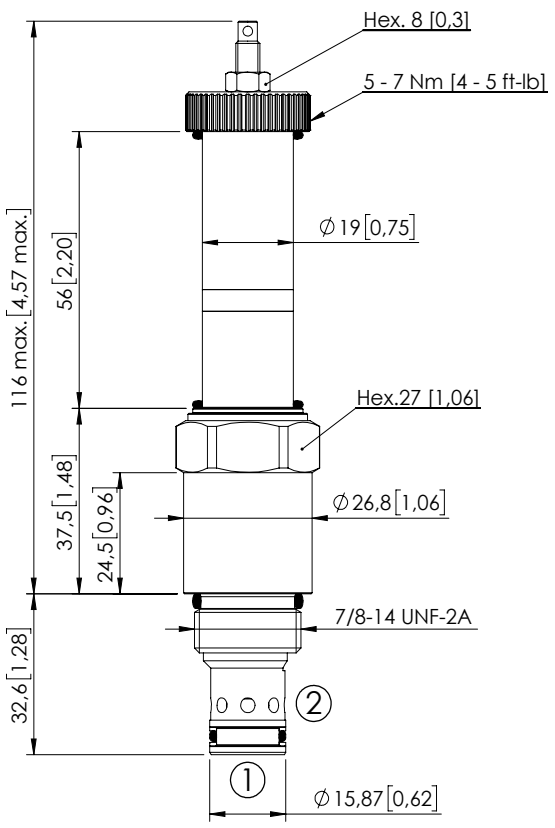

Dimensions: mm [inches]

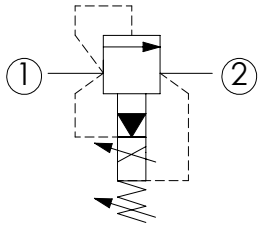

SPECIFICATIONS

Max. operating pressure (port 1):	320 bar (4600 psi)
Max. operating pressure (port 2):	250 bar (3600 psi)
Rated flow:	120 l/min (32 gpm)
Pilot oil:	< 0,8 l/min (<0,2 gpm)
Type hydraulic fluid:	See Technical specif.
Hydraulic fluid temp. range:	-30/+100 °C (-22/+212 °F)
Viscosity range:	10 to 380 mm²/s
Contamination class to ISO 4406:	See technical spec.
Max. int. leakage:	200 cm³/min (@46 cSt, Δp=250 bar) 0,05 in³/min (@46 cSt, Δp=3600 psi)
Step response:	80 ms (Depending on the system)
Cavity:	SAE-10-2N
Weight:	0,21 kg (0,46 lbs)
Coil type:	M15 type
Ambient temperature:	-20/+50 °C (-4/+122 °F)
Hysteresis:	< 4% of the max. set pressure
PWM range recommended:	150-180 Hz
Installation torque:	55 - 62 Nm (41 - 46 ft-lb)
Seal kit:	RB100082
MTTFd:	150 - 1200 years: See technical spec.

NOTES

Pressure decreasing with current increasing.
Maximum pressure value can be adjusted manually within a range.
For other configurations/quick codes not available in this catalogue page please consult factory

CURVES

PRESSURE IN PORT 1 vs CONTROL CURRENT

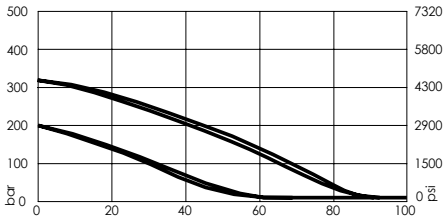

% MAX.CONTROL CURRENT - (I)

PRESSURE IN PORT 1 vs FLOW

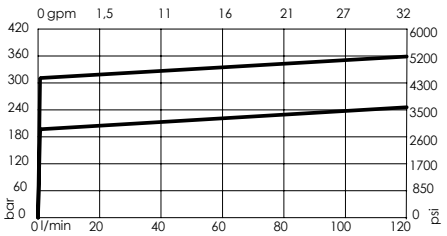

MINIMUM SET PRESSURE vs FLOW

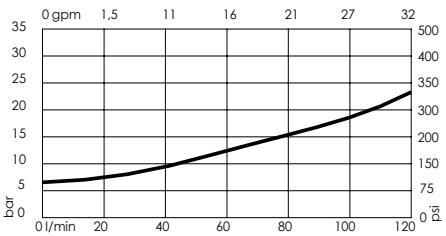

ORDERING CODES

Quick code	Description	Minimum pressure	Max. pressure setting range	Standard setting	Threshold current (with12VDC coil)	Max control current (with 12V DC coil)
CE000890	CEBT-120-PMPS-91-S10-V320	7 bar (100 psi)	200-320 bar (2900-4600 psi)	210 bar (3000 psi)	200 mA (+/-7%)	1600 mA (+/-7%)

Revision B3

SOLENOID OPERATED CARTRIDGE

CEBT-120-PLPS

PROPORTIONAL VALVES
PILOTED RELIEF
SPOOL TYPE

ATLANTIC Fluid Tech
WWW.SUMY.IR

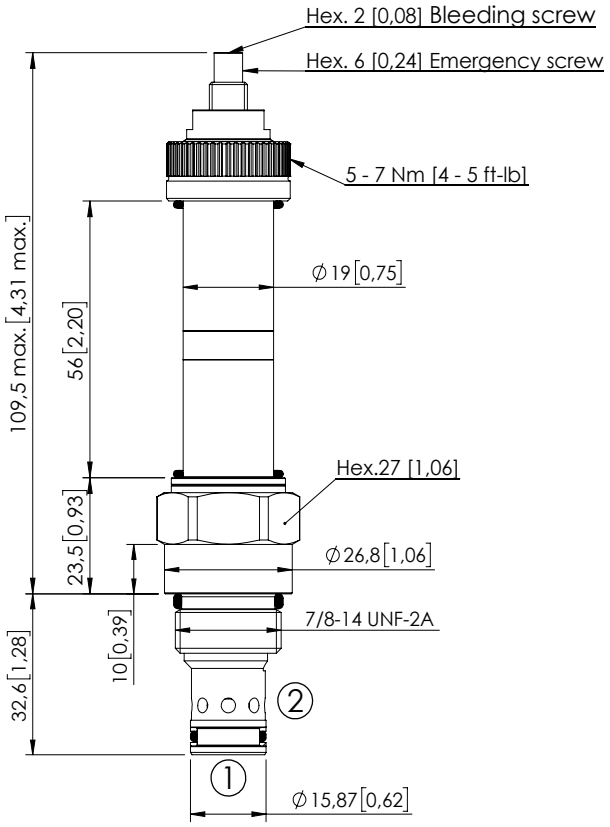

Dimensions: mm [inches]

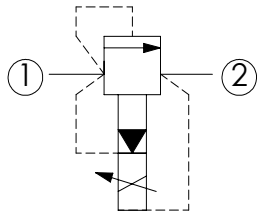

SPECIFICATIONS

Max. operating pressure:	350 bar (5000 psi)
Rated flow:	120 l/min (32 gpm)
Cavity:	SAE-10-2N
Weight:	0,31 kg (0,44 lbs)
Type hydraulic fluid:	See Technical specif.
Hydraulic fluid temp. range:	-30/+100 °C (-22/+212 °F)
Contamination class to ISO 4406:	See technical spec.
Coil type:	M15 type
Ambient temperature:	-20/+50 °C (-4/+122 °F)
PWM range recommended:	150-180 Hz
Installation torque:	55 - 62 Nm (41 - 46 ft-lb)
Max. int. leakage:	200 cm^3/min (@46 cSt) 12 in^3/min (@46 cSt)
Seal kit:	RB100082
MTTFd:	150 - 1200 years: See technical spec.

NOTES

Bleed air before use

For other configurations/quick codes not available in this catalogue page please consult factory

CURVES

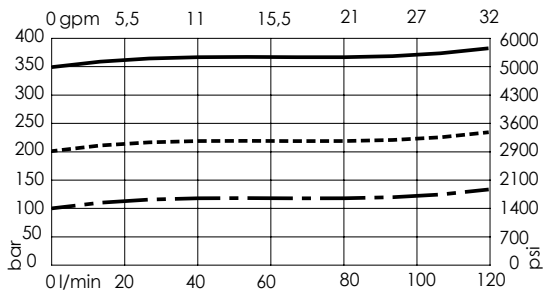

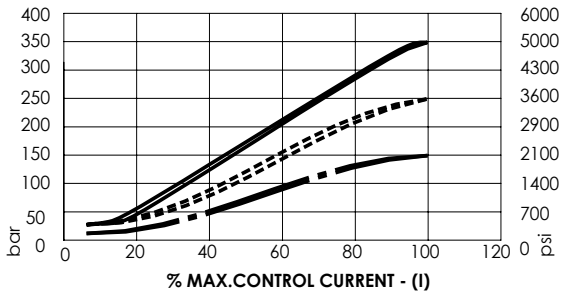

CE000119 1>2———— CE000120 1>2------ CE000121 1>2—— – ——

ORDERING CODES

Quick code	Description	Setting range	Threshold current (with12VDC coil)	Max control current (with 12V DC coil)	Override	
CE000119	CEBT-120-PLPS-91-S10-V350	30-350 bar (450-5000 psi)	200 mA (+/-7%)	1600 mA (+/-7%)	Screw style	
CE000120	CEBT-120-PLPS-91-S10-V200	20-220 bar (300-3100 psi)	200 mA (+/-7%)	1700 mA (+/-7%)	Screw style	
CE000121	CEBT-120-PLPS-91-S10-V100	15-90 bar (200-1300 psi)	200 mA (+/-7%)	1700 mA (+/-7%)	Screw style	

Revision B3

SOLENOID OPERATED CARTRIDGE

CEBT-300-PLPS

PROPORTIONAL VALVES
PILOTED RELIEF
SPOOL TYPE

ATLANTIC Fluid Tech
WWW.SUMY.IR

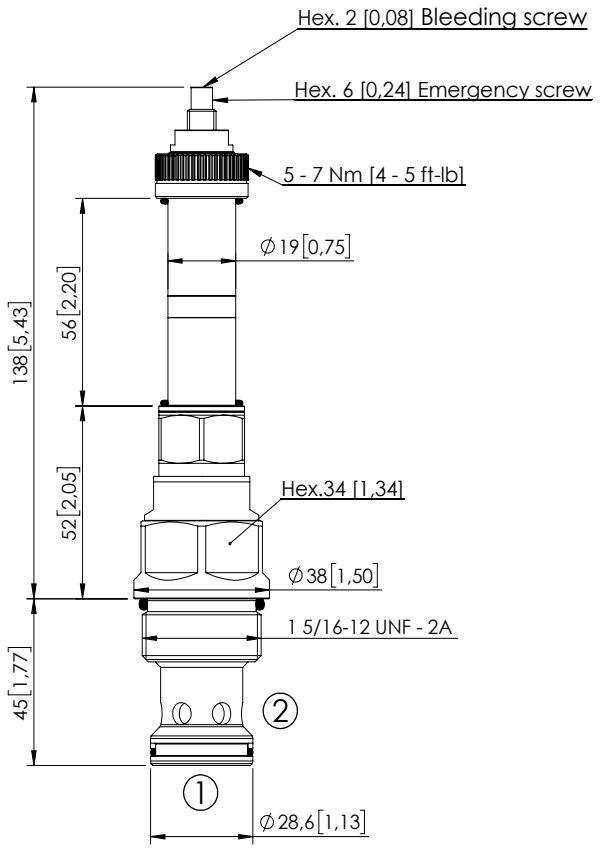

Dimensions: mm [inches]

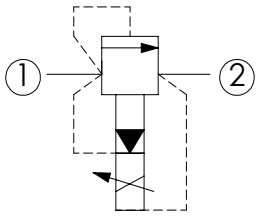

SPECIFICATIONS

Max. operating pressure:	350 bar (5000 psi)
Rated flow:	300 l/min (80 gpm)
Cavity:	SAE-16-2N
Weight:	0,6 kg (1,10 lbs)
Type hydraulic fluid:	See Technical specif.
Hydraulic fluid temp. range:	-30/+100 °C (-22/+212 °F)
Contamination class to ISO 4406:	See technical spec.
Coil type:	M15 type
Ambient temperature:	-20/+50 °C (-4/+122 °F)
PWM range recommended:	150-180 Hz
Installation torque:	118 - 132 Nm (87 - 97 ft-lb)
Max. int. leakage:	200 cm^3/min (@46 cSt) 12 in^3/min (@46 cSt)
Seal kit:	RA100084
MTTFd:	150 - 1200 years: See technical spec.

NOTES

Bleed air before use

For other configurations/quick codes not available in this catalogue page please consult factory

CURVES

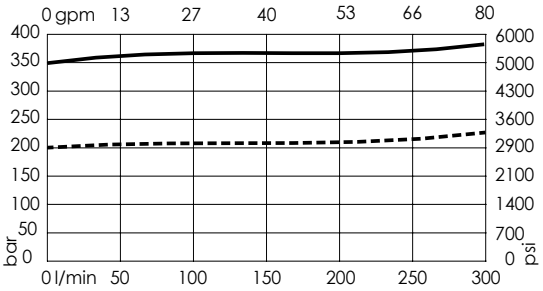

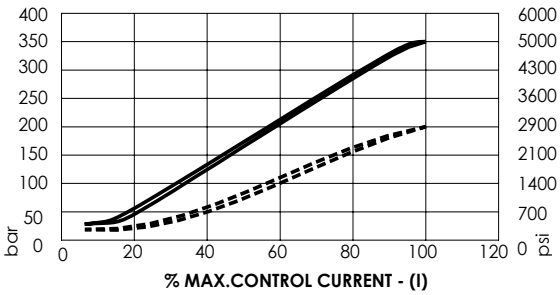

CE000880 1>2———— CE000895 1>2------

ORDERING CODES

Quick code	Description	Proportional setting range	Threshold current (with12VDC coil)	Max control current (with 12V DC coil)	Override	
CE000880	CEBT-300-PLPS-91-S16-V350	30-350 bar (450-5000 psi)	200 mA (+/-7%)	1600 mA (+/-7%)	Screw style	
CE000895	CEBT-300-PLPS-91-S16-V200	20-200 bar (300-2900 psi)	200 mA (+/-7%)	1700 mA (+/-7%)	Screw style	

Revision B3

SOLENOID OPERATED CARTRIDGE

CEBT-500-PLPS

PROPORTIONAL VALVES
PILOTED RELIEF
SPOOL TYPE

ATLANTIC Fluid Tech
WWW.SUMY.IR

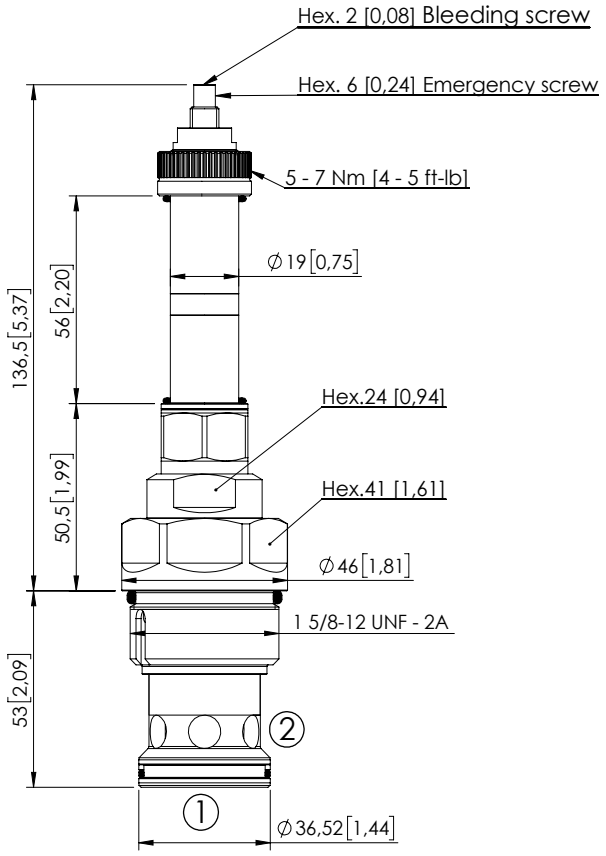

Dimensions: mm [inches]

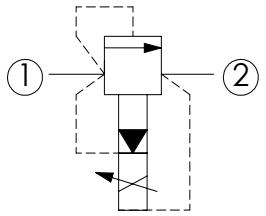

SPECIFICATIONS

Max. operating pressure:	350 bar (5000 psi)
Rated flow:	500 l/min(132 gpm)
Cavity:	SAE-20-2N
Weight:	0,8 kg (1,76 lbs)
Type hydraulic fluid:	See Technical specif.
Hydraulic fluid temp. range:	-30/+100 °C (-22/+212 °F)
Contamination class to ISO 4406:	See technical spec.
Coil type:	M15 type
Ambient temperature:	-20/+50 °C (-4/+122 °F)
PWM range recommended:	150-180 Hz
Installation torque:	230 - 250 Nm (170 - 184 ft-lb)
Max. int. leakage:	200 cm^3/min (@46 cSt) 12 in^3/min (@46 cSt)
Seal kit:	RA100085
MTTFd:	150 - 1200 years: See technical spec.

NOTES

Bleed air before use

For other configurations/quick codes not available in this catalogue page please consult factory

CURVES

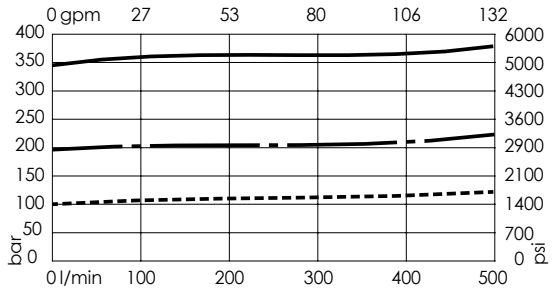

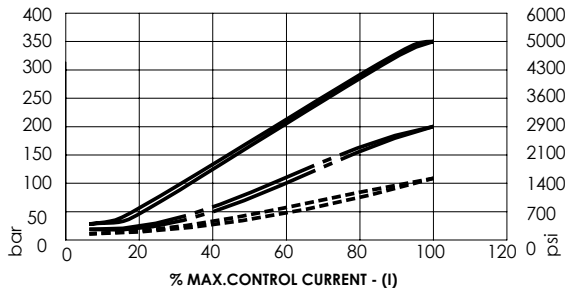

CE000770 1>2———— CE000771 1>2— – — CE000772 1>2------

ORDERING CODES

Quick code	Description	Proportional setting range	Threshold current (with12VDC coil)	Max control current (with 12V DC coil)	Override	
CE000770	CEBT-500-PLPS-91-S20-V350	30-350 bar (450-5000 psi)	200 mA (+/-7%)	1600 mA (+/-7%)	Screw style	
CE000771	CEBT-500-PLPS-91-S20-V200	20-220 bar (300-3100 psi)	200 mA (+/-7%)	1700 mA (+/-7%)	Screw style	
CE000772	CEBT-500-PLPS-91-S20-V100	15-90 bar (200-1300 psi)	200 mA (+/-7%)	1700 mA (+/-7%)	Screw style	

Revision B3

SOLENOID OPERATED CARTRIDGE

CECS-040-FSPS

PROPORTIONAL VALVES
NON COMPENSATED
FLOW REGULATOR

ATLANTIC Fluid Tech
WWW.SUMY.IR

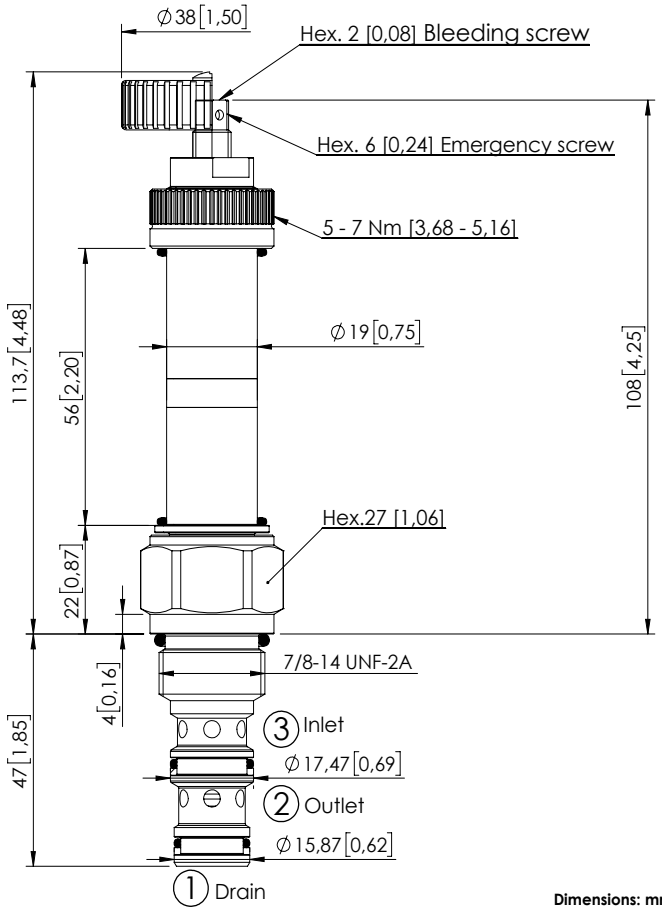

Dimensions: mm [inches]

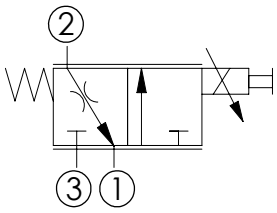

SPECIFICATIONS

Max. operating pressure:	210 bar (3000 psi)
Rated flow:	40 l/min (11 gpm)
Cavity:	SAE-10-3N
Weight:	0,22 kg (0,49 lbs)
Type hydraulic fluid:	See Technical specif.
Hydraulic fluid temp. range:	-30/+100 °C (-22/+212 °F)
Contamination class to ISO 4406:	See technical spec.
Coil type:	M15 type
Ambient temperature:	-20/+50 °C (-4/+122 °F)
PWM range recommended:	150-180 Hz
Installation torque:	55 - 62 Nm (41 - 46 ft-lb)
Max. int. leakage:	150 cm^3/min (@46 cSt) 9 in^3/min (@46 cSt)
Seal kit:	RA100092
MTTFd:	150 - 1200 years: See technical spec.

NOTES

Bleed air before use

For other configurations/quick codes not available in this catalogue page please consult factory

CURVES

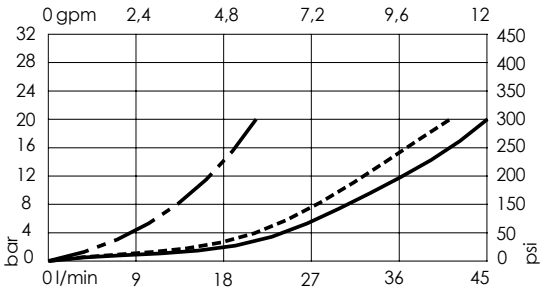

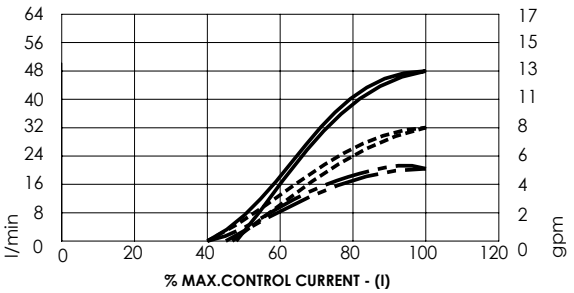

CE000111 3>2 ———— CE000112 3>2 ------ CE000113 3>2 — – —

ORDERING CODES

Quick code	Description	Rated flow	Threshold current (with12VDC coil)	Max control current (with 12V DC coil)	Override	
CE000111	CECS-040-FSPS-85-S10-V210	40 l/min (11 gpm)	800 mA (+/-7%)	1600 mA (+/-7%)	Screw style	
CE000112	CECS-030-FSPS-85-S10-V210	30 l/min (8 gpm)	700 mA (+/-7%)	1500 mA (+/-7%)	Screw style	
CE000113	CECS-020-FSPS-85-S10-V210	20 l/min (6 gpm)	700 mA (+/-7%)	1400 mA (+/-7%)	Screw style	
CE000960	CECS-040-FSPV-85-S10-V210	40 l/min (11 gpm)	800 mA (+/-7%)	1600 mA (+/-7%)	Handknob style	
CE000906	CECS-030-FSPV-85-S10-V210	30 l/min (8 gpm)	700 mA (+/-7%)	1500 mA (+/-7%)	Handknob style	
CE000489	CECS-020-FSPV-85-S10-V210	20 l/min (6 gpm)	700 mA (+/-7%)	1400 mA (+/-7%)	Handknob style	

Revision B3

SOLENOID OPERATED CARTRIDGE

CECS-050-FRPN

PROPORTIONAL VALVES
FLOW REGULATOR
3 WAYS COMBINATION

ATLANTIC Fluid Tech
WWW.SUMY.IR

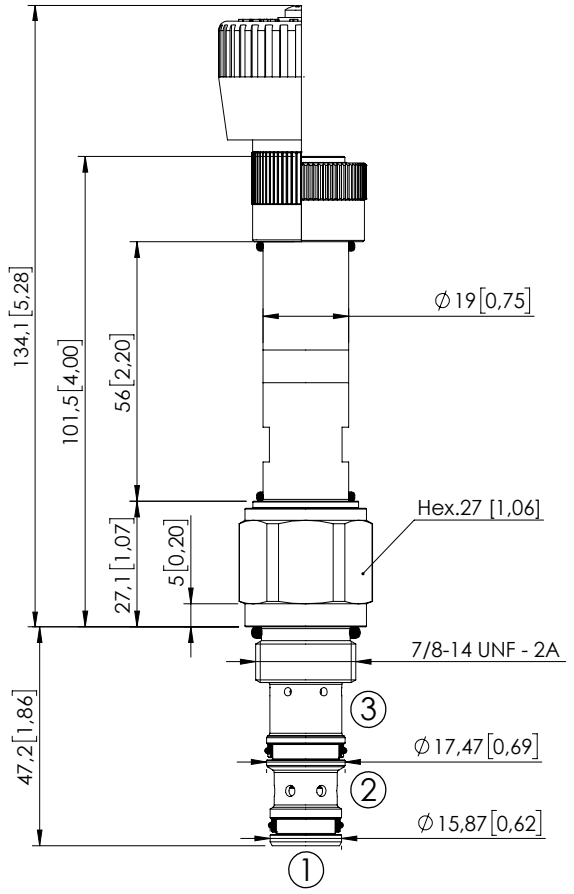

Dimensions: mm [inches]

3 way application

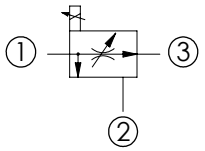

2 way application, port 2 not connected

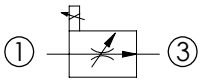

SPECIFICATIONS

Max. operating pressure:	320 bar (4600 psi)
Max. flow (in inlet port 1):	50 l/min (13 gpm)
Max. flow 1 to 3:	35 l/min REGULATED (9 gpm)
Cavity:	SAE-10-3N
Weight:	0,250 kg (0,55 lbs)
Type hydraulic fluid:	See Technical specif.
Hydraulic fluid temp. range:	-30/+100 °C (-22/+212 °F)
Contamination class to ISO 4406:	See technical spec.
Coil type:	M15 type
Voltage:	12- 24 V dc
Ambient temperature:	-20/+50 °C (-4/+122 °F)
Pressure differential (1 to 3):	7-11 bar (101 - 159 psi)
Hysteresis (ramp up and down):	5 %
Max current (12 V dc):	1800 mA
Max current (24 V dc):	1200 mA
Coil resistance (12 V dc):	3.3-5.8 Ω
Coil resistence (24 V dc):	7.2-13 Ω
Surface protection proportional solenoid:	Coating DIN 50962 Fe8/ Zi-Ni with passivation
Installation torque:	55 - 62 Nm (41 - 46 ft-lb)
Seal kit:	RB100092
MTTFd:	150 - 1200 years: See technical spec.

NOTES

For other configurations/quick codes not available in this catalogue page please consult factory

CURVES

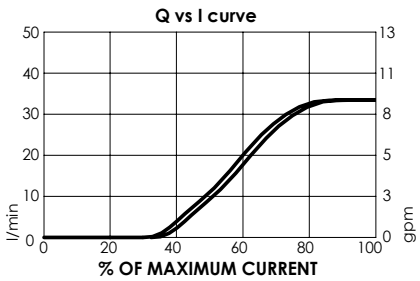

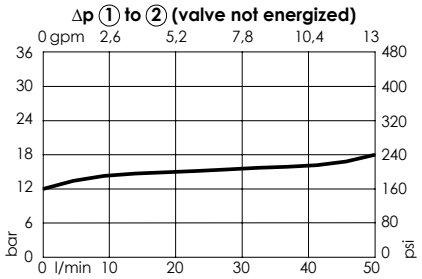

ORDERING CODES

Quick code	Description	Regulated flow range	Adjustment type	
CE001144	CECS-050-FRPN-35-S10-V320	0-35 l/min (0-9 gpm)	Standard	
CE001882	CECS-050-FRPM-35-S10-V320	0-35 l/min (0-9 gpm)	Handknob	

Revision B

SOLENOID OPERATED CARTRIDGE

CECS-140-FRPM

PROPORTIONAL VALVES
FLOW REGULATOR
PRIORITY TYPE

ATLANTIC Fluid Tech
WWW.SUMY.IR

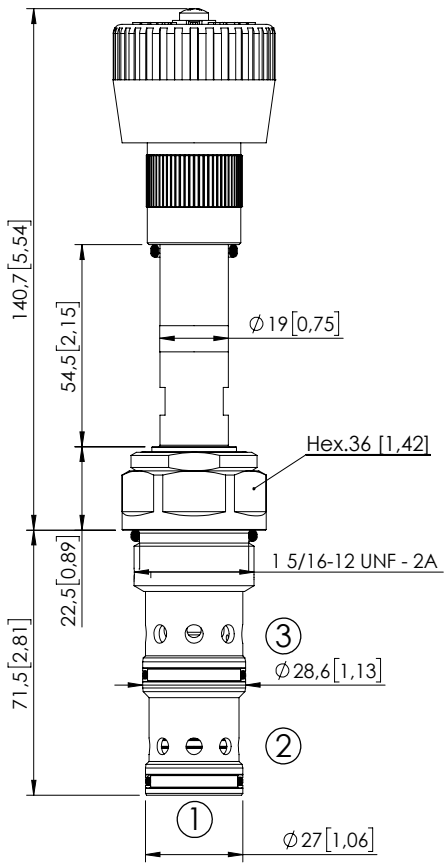

Dimensions: mm [inches]

3 way application

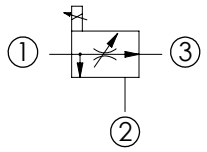

2 way application, port 2 not connected

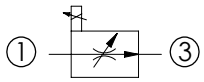

SPECIFICATIONS

Max. operating pressure:	320 bar (4600 psi)
Max. flow (in inlet port ①):	140 l/min (37 gpm)
Max. flow ① to ③:	120 l/min REGULATED (32 gpm)
Cavity:	SAE-16-3N
Weight:	0,6 kg (1,32 lbs)
Type hydraulic fluid:	See Technical specif.
Hydraulic fluid temp. range:	-30/+100 °C (-22/+212 °F)
Contamination class to ISO 4406:	See technical spec.
Coil type:	M15 type
Voltage:	12- 24 V dc
Ambient temperature:	-20/+50 °C (-4/+122 °F)
Pressure differential (① to ③):	7-11 bar (101 - 159 psi)
Hysteresis (ramp up and down):	1,5 - 3 %
Max current (12 V dc):	1800 mA
Max current (24 V dc):	1200 mA
Coil resistance (12 V dc):	3.3-5.8 Ω
Coil resistence (24 V dc):	7.2-13 Ω
Surface protection proportional solenoid:	Coating DIN 50962 Fe8/ Zi-Ni with passivation
Installation torque:	118 - 132 Nm (160 - 179 ft-lb)
Seal kit:	RB100094
MTTFd:	150 - 1200 years: See technical spec.

NOTES

If port 2 is blocked the valve operates as a two way flow regulator.
Port 2 can be pressurized.
For other configurations/quick codes not available in this catalogue page please consult factory

CURVES

Regulated flow ① to ③ (② open to T)

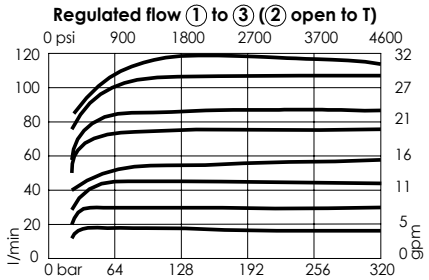

Δp ① to ② (valve not energized)

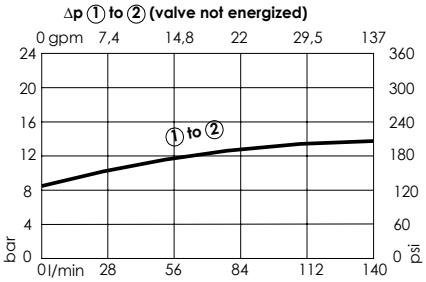

Q vs I curve

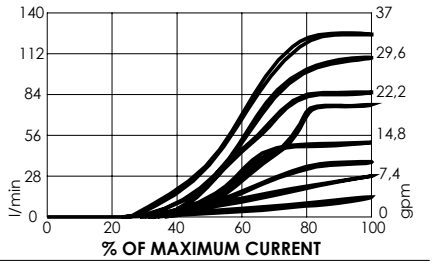

ORDERING CODES

Quick code	Description	Regulated flow range	Adjustment type	
CE000831	CECS-140-FRPM-15-S16-V320	0-15 l/min (0-4 gpm)	Handknob	
CE000832	CECS-140-FRPM-25-S16-V320	0-25 l/min (0-7 gpm)	Handknob	
CE000833	CECS-140-FRPM-40-S16-V320	0-40 l/min (0-11 gpm)	Handknob	
CE000834	CECS-140-FRPM-50-S16-V320	0-50 l/min (0-13 gpm)	Handknob	
CE000835	CECS-140-FRPM-65-S16-V320	0-65 l/min (0-17 gpm)	Handknob	
CE000836	CECS-140-FRPM-80-S16-V320	0-80 l/min (0-21 gpm)	Handknob	
CE001034	CECS-140-FRPM-100-S16-V320	0-100 l/min (0-27 gpm)	Handknob	
CE001184	CECS-140-FRPM-120-S16-V320	0-120 l/min (0-32 gpm)	Handknob	

Revision F

SOLENOID OPERATED CARTRIDGE

CEBD-020-PEPS

PROPORTIONAL VALVE
NORMALLY CLOSED

ATLANTIC Fluid Tech
WWW.SUMY.IR

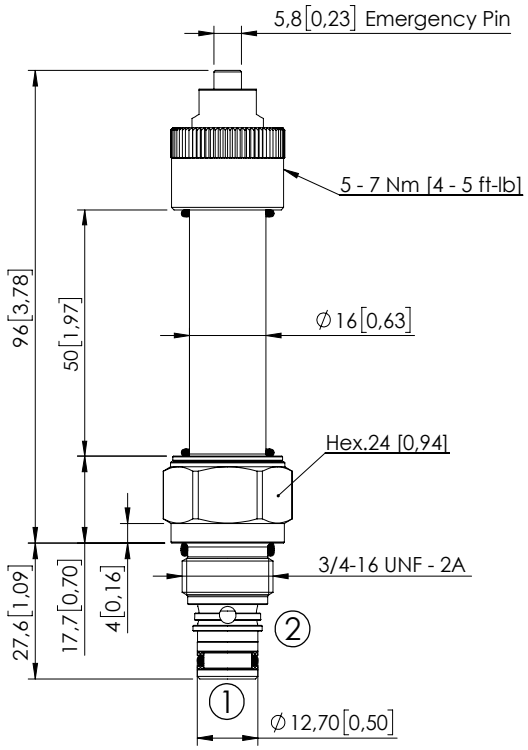

Dimensions: mm [inches]

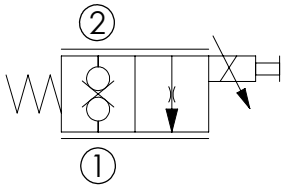

SPECIFICATIONS

Max. operating pressure:	210 bar (3000 psi)
Rated flow:	20 l/min (5 gpm)
Cavity:	SAE 08-2N
Weight:	0,21 kg (0,33 lbs)
Type hydraulic fluid:	See Technical specif.
Hydraulic fluid temp. range:	-30/+100 °C (-22/+212 °F)
Contamination class to ISO 4406:	See technical spec.
Coil type:	M16 type
Ambient temperature:	-20/+50 °C (-4/+122 °F)
PWM range recommended:	120-150 Hz
Installation torque:	45 - 50 Nm (33 - 37 ft-lb)
Seal kit:	RA100081
MTTFd:	150 - 1200 years: See technical spec.

NOTES

Bleed air before use

For other configurations/quick codes not available in this catalogue page please consult factory

CURVES

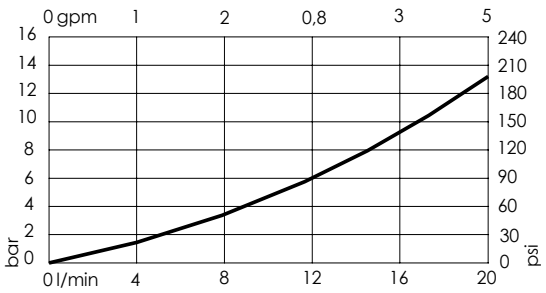

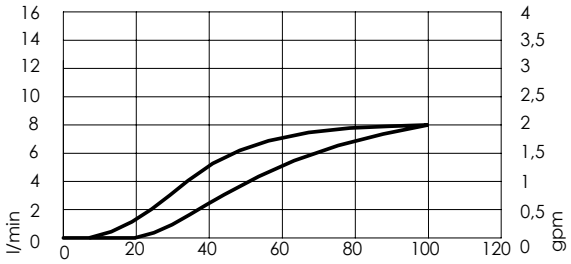

% MAX.CONTROL CURRENT - (I)

ORDERING CODES

Quick code	Description	Rated flow	Threshold current (with12VDC coil)	Max control current (with 12V DC coil)	Override	
CE001190	CEBD-020-PEPS-103-S08-V210	20 l/min (5 gpm)	1000 mA (+/-7%)	2000 mA (+/-7%)	Push style	

Revision B3

SOLENOID OPERATED CARTRIDGE

CEBD-020-PEPS

PROPORTIONAL VALVE
NORMALLY CLOSED

ATLANTIC Fluid Tech
WWW.SUMY.IR

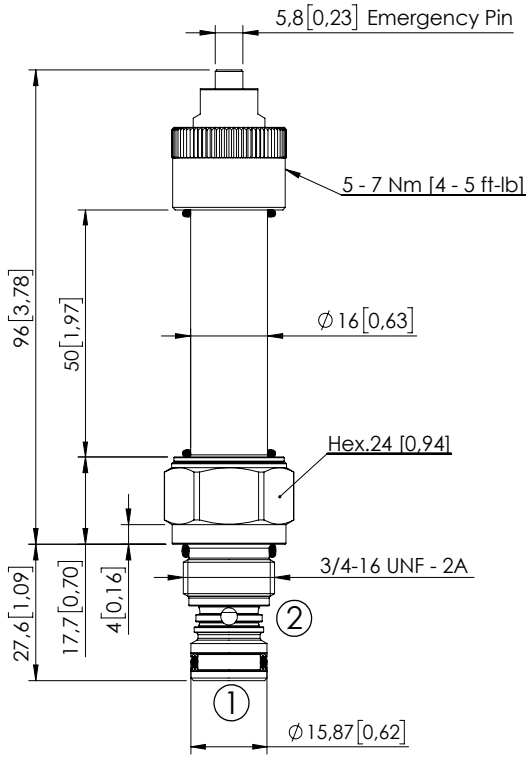

Dimensions: mm [inches]

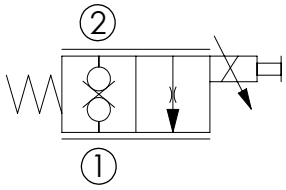

SPECIFICATIONS

Max. operating pressure:	210 bar (3000 psi)
Rated flow:	20 l/min (5 gpm)
Cavity:	VP000064
Weight:	0,21 kg (0,33 lbs)
Type hydraulic fluid:	See Technical specif.
Hydraulic fluid temp. range:	-30/+100 °C (-22/+212 °F)
Contamination class to ISO 4406:	See technical spec.
Coil type:	M16 type
Ambient temperature:	-20/+50 °C (-4/+122 °F)
PWM range recommended:	150-180 Hz
Installation torque:	45 - 50 Nm (33 - 37 ft-lb)
Seal kit:	RA100081
MTTFd:	150 - 1200 years: See technical spec.

NOTES

Bleed air before use

For other configurations/quick codes not available in this catalogue page please consult factory

CURVES

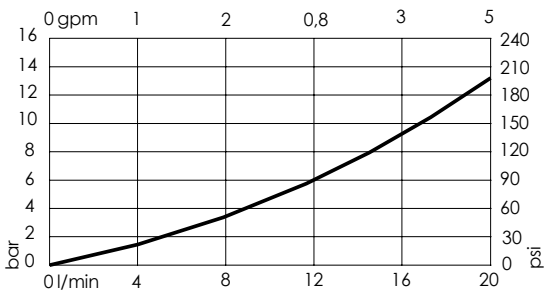

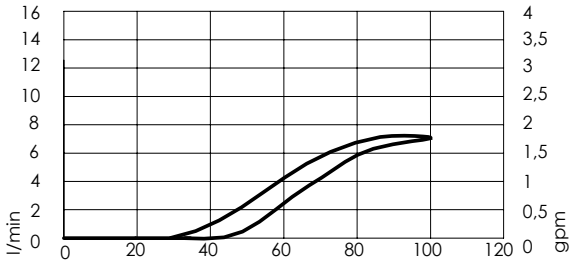

% MAX.CONTROL CURRENT - (I)

ORDERING CODES

Quick code	Description	Rated flow	Threshold current (with12VDC coil)	Max control current (with 12V DC coil)	Override	
CE001116	CEBD-020-PEPS-103-064-V210	20 l/min (5 gpm)	1000 mA (+/-7%)	2000 mA (+/-7%)	Push style	

Revision B3

SOLENOID OPERATED CARTRIDGE

CEES-010-SEPN-51

DIRECT OPERATED
SPOOL TYPE

ATLANTIC Fluid Tech
WWW.SUMY.IR

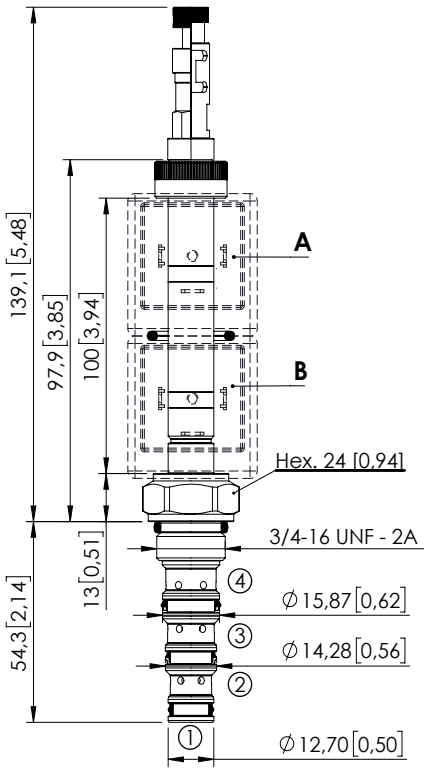

Dimensions: mm [inches]

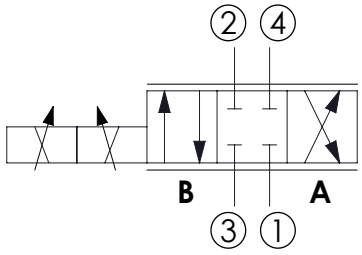

SPECIFICATIONS

Max. operating pressure:	350 bar (5000 psi)
Max. operating pressure on port 1:	210 bar (3000 psi)
Rated flow:	10 l/min (3 gpm)
Cavity:	SAE-08-4N
Weight:	0.13 kg (0,68 lbs)
Min. voltage required:	90% of nominal
Coil type:	M7 or M3 type
Ambient temperature:	-20/+50 °C (-4/+122 °F)
PWM range recommended:	100 Hz
Contamination class to ISO 4406:	See technical spec.
Seal kit:	RB600101
Installation torque:	45 - 50 Nm (41 - 46 ft-lb)
MTTFd:	150 - 1200 years: See technical spec.
Leakage:	120 cm³/min (@46 cSt) 7,3 in³/min (@46 cSt)

NOTES

For other configurations/quick codes not available in this catalogue page please consult factory

OPTIONS

Standard

Push and pull manual override

Push pull and twist manual override

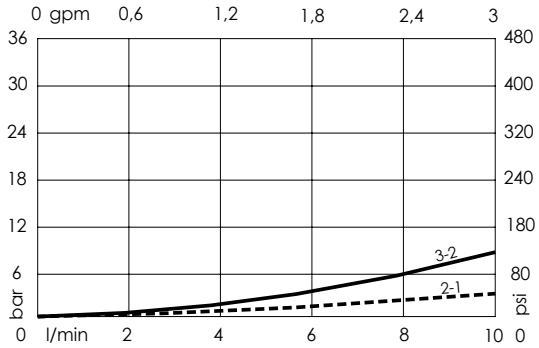

ORDERING CODES

Quick code	Description	Options	
CE001832	CEES-010-SEPN-51-S08-N350	Standard	
CE001833	CEES-010-SEPL-51-S08-N350	Push and pull manual override	
CE001834	CEES-010-SEPG-51-S08-N350	Push pull and twist manual override	

Revision C

SOLENOID OPERATED CARTRIDGE

CEES-010-SEPN-52

DIRECT OPERATED
SPOOL TYPE

ATLANTIC Fluid Tech
WWW.SUMY.IR

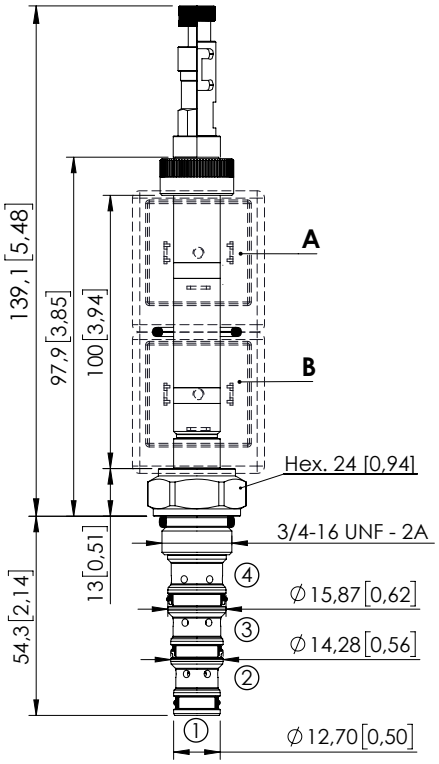

Dimensions: mm [inches]

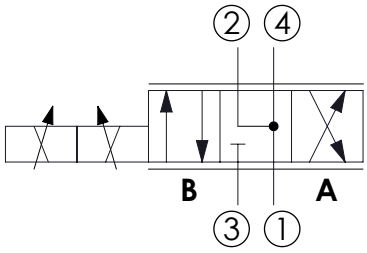

SPECIFICATIONS

Max. operating pressure:	350 bar (5000 psi)
Max. operating pressure on port 1:	210 bar (3000 psi)
Rated flow:	10 l/min (3 gpm)
Cavity:	SAE-08-4N
Weight:	0,13 kg (0,68 lbs)
Min. voltage required:	90% of nominal
Coil type:	M7 or M3 type
Ambient temperature:	-20/+50 °C (-4/+122 °F)
PWM range recommended:	100 Hz
Contamination class to ISO 4406:	See technical spec.
Seal kit:	RB600101
Installation torque:	45 - 50 Nm (41 - 46 ft-lb)
MTTFd:	150 - 1200 years: See technical spec.
Leakage:	120 cm³/min (@46 cSt) 7,3 in³/min (@46 cSt)

NOTES

For other configurations/quick codes not available in this catalogue page please consult factory

OPTIONS

Standard

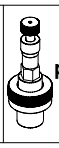
Push and pull manual override

Push pull and twist manual override

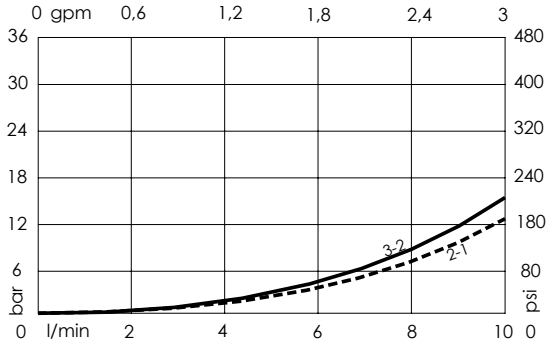

ORDERING CODES

Quick code	Description	Options	
CE001835	CEES-010-SEPN-52-S08-N350	Standard	
CE001836	CEES-010-SEPL-52-S08-N350	Push and pull manual override	
CE001837	CEES-010-SEPG-52-S08-N350	Push pull and twist manual override	

Revision C

SOLENOID OPERATED CARTRIDGE

CEFS-010-SEPN-106

DIRECT OPERATED
SPOOL TYPE

ATLANTIC Fluid Tech
WWW.SUMY.IR

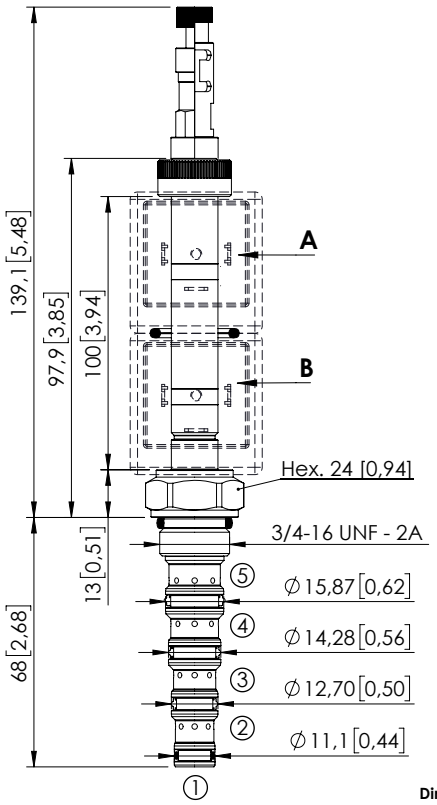

Dimensions: mm [inches]

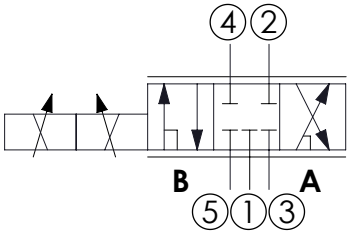

SPECIFICATIONS

Max. operating pressure:	350 bar (5000 psi)
Max. operating pressure on port 1:	210 bar (3000 psi)
Rated flow:	10 l/min (3 gpm)
Cavity:	SAE-08-5N
Weight:	0.25 kg (0,68 lbs)
Min. voltage required:	90% of nominal
Coil type:	M7 or M3 type
Ambient temperature:	-20/+50 °C (-4/+122 °F)
PWM range recommended:	100 Hz
Contamination class to ISO 4406:	See technical spec.
Seal kit:	RB900106
Installation torque:	45 - 50 Nm (41 - 46 ft-lb)
MTTFd:	150 - 1200 years: See technical spec.
Leakage:	120 cm³/min (@46 cSt) 7,3 in³/min (@46 cSt)

NOTES

For other configurations/quick codes not available in this catalogue page please consult factory

OPTIONS

Standard

Push and pull manual override

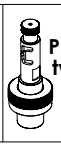
Push pull and twist manual override

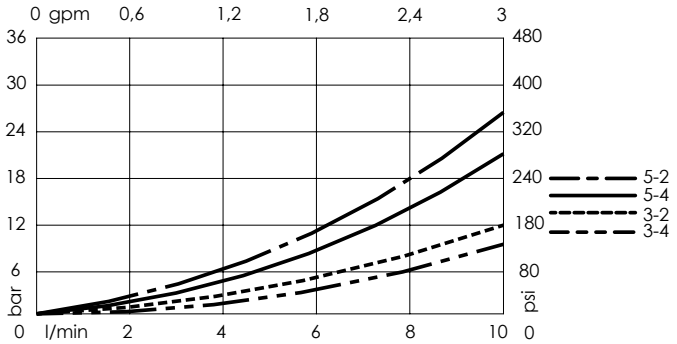

ORDERING CODES

Quick code	Description	Options	
CE001841	CEFS-010-SEPN-106-S08-N350	Standard	
CE001842	CEFS-010-SEPL-106-S08-N350	Push and pull manual override	
CE001843	CEFS-010-SEPG-106-S08-N350	Push pull and twist manual override	

Revision B

SOLENOID OPERATED CARTRIDGE

CEFS-010-SEPN-107

DIRECT OPERATED
SPOOL TYPE

ATLANTIC Fluid Tech
WWW.SUMY.IR

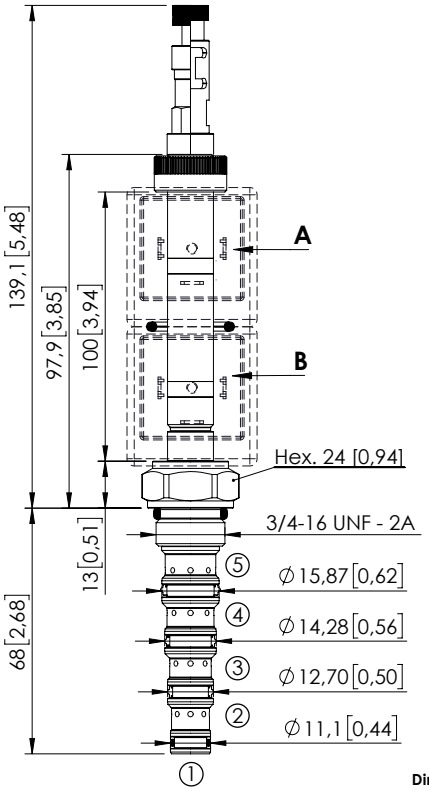

Dimensions: mm [inches]

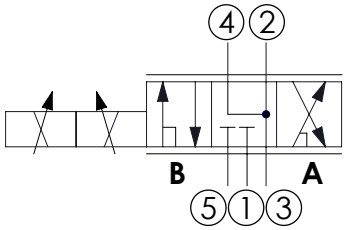

SPECIFICATIONS

Max. operating pressure:	350 bar (5000 psi)
Max. operating pressure on port 1:	210 bar (3000 psi)
Rated flow:	10 l/min (3 gpm)
Cavity:	SAE-08-5N
Weight:	0,25 kg (0,68 lbs)
Min. voltage required:	90% of nominal
Coil type:	M7 or M3 type
Ambient temperature:	-20/+50 °C (-4/+122 °F)
PWM range recommended:	100 Hz
Contamination class to ISO 4406:	See technical spec.
Seal kit:	RB900106
Installation torque:	45 - 50 Nm (41 - 46 ft-lb)
MTTFd:	150 - 1200 years: See technical spec.
Leakage:	120 cm³/min (@46 cSt) 7,3 in³/min (@46 cSt)

NOTES

For other configurations/quick codes not available in this catalogue page please consult factory

OPTIONS

Standard

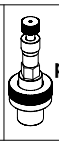
Push and pull manual override

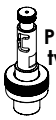
Push pull and twist manual override

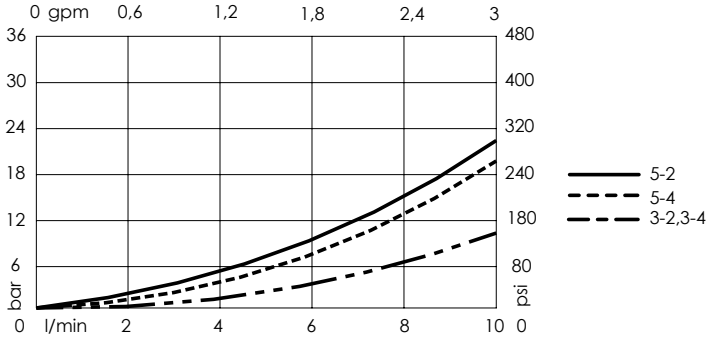

ORDERING CODES

Quick code	Description	Options	
CE001844	CEFS-010-SEPN-107-S08-N350	Standard	
CE001845	CEFS-010-SEPL-107-S08-N350	Push and pull manual override	
CE001846	CEFS-010-SEPG-107-S08-N350	Push pull and twist manual override	

Revision B

SOLENOID OPERATED CARTRIDGE

CEFS-010-SEPN-115

DIRECT OPERATED
SPOOL TYPE

ATLANTIC Fluid Tech
WWW.SUMY.IR

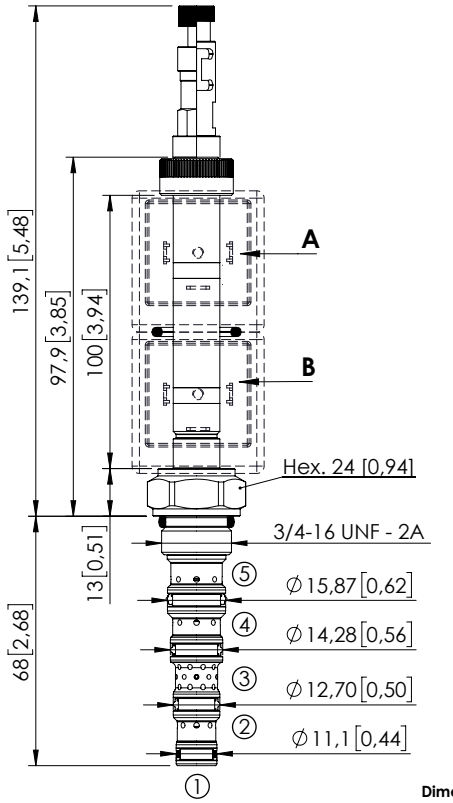

Dimensions: mm [inches]

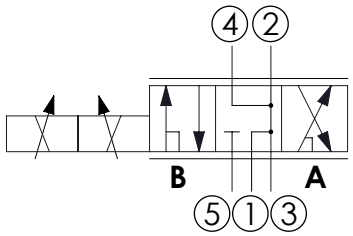

SPECIFICATIONS

Max. operating pressure:	350 bar (5000 psi)
Max. operating pressure on port 1:	210 bar (3000 psi)
Rated flow:	10 l/min (3 gpm)
Cavity:	SAE-08-5N
Weight:	0,25 kg (0,68 lbs)
Min. voltage required:	90% of nominal
Coil type:	M7 or M3 type
Ambient temperature:	-20/+50 °C (-4/+122 °F)
PWM range recommended:	100 Hz
Contamination class to ISO 4406:	See technical spec.
Seal kit:	RB900106
Installation torque:	45 - 50 Nm (41 - 46 ft-lb)
$MTTF_d$:	150 - 1200 years: See technical spec.
Leakage:	120 cm^3/min (@46 cSt) 7,3 in^3/min (@46 cSt)

NOTES

For other configurations/quick codes not available in this catalogue page please consult factory

OPTIONS

Standard

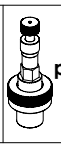
Push and pull manual override

Push pull and twist manual override

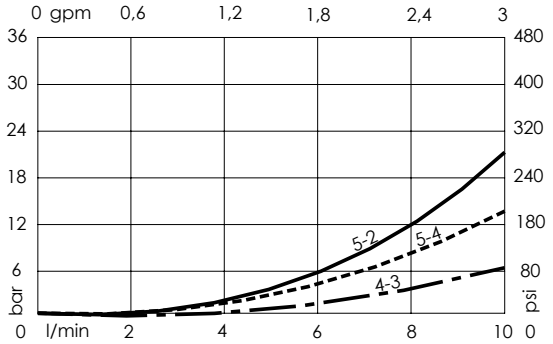

ORDERING CODES

Quick code	Description	Options	
CE001850	CEFS-010-SEPN-115-S08-N350	Standard	
CE001851	CEFS-010-SEPL-115-S08-N350	Push and pull manual override	
CE001852	CEFS-010-SEPG-115-S08-N350	Push pull and twist manual override	

Revision A

SOLENOID OPERATED CARTRIDGE

CEES-030-SEPN-51

DIRECT OPERATED
SPOOL TYPE

ATLANTIC Fluid Tech
WWW.SUMY.IR

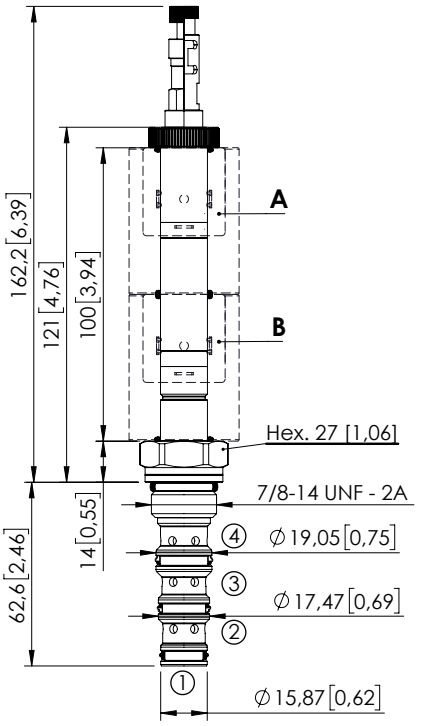

Dimensions: mm [inches]

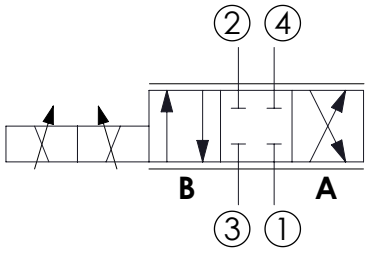

SPECIFICATIONS

Max. operating pressure:	350 bar (5000 psi)
Max. operating pressure on port 1:	210 bar (3000 psi)
Rated flow:	30 l/min (8 gpm)
Cavity:	SAE-10-4N
Weight:	0.20 kg (0,68 lbs)
Min. voltage required:	90% of nominal
Coil type:	M16
Ambient temperature:	-20/+50 °C (-4/+122 °F)
PWM range recommended:	100 Hz
Contamination class to ISO 4406:	See technical spec.
Seal kit:	RB600102
Installation torque:	55 - 62 Nm (41 - 46 ft-lb)
MTTFd:	150 - 1200 years: See technical spec.
Leakage:	120 cm³/min (@46 cSt) 7,3 in³/min (@46 cSt)

NOTES

For other configurations/quick codes not available in this catalogue page please consult factory

OPTIONS

Standard

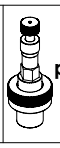
Push and pull manual override

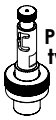
Push pull and twist manual override

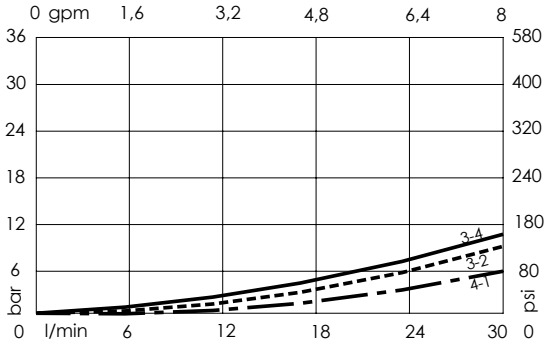

ORDERING CODES

Quick code	Description	Options	
CE001853	CEES-030-SEPN-51-S10-N350	Standard	
CE001854	CEES-030-SEPL-51-S10-N350	Push and pull manual override	
CE001855	CEES-030-SEPG-51-S10-N350	Push pull and twist manual override	

Revision C

SOLENOID OPERATED CARTRIDGE

CEES-030-SEPN-52

DIRECT OPERATED
SPOOL TYPE

ATLANTIC Fluid Tech
WWW.SUMY.IR

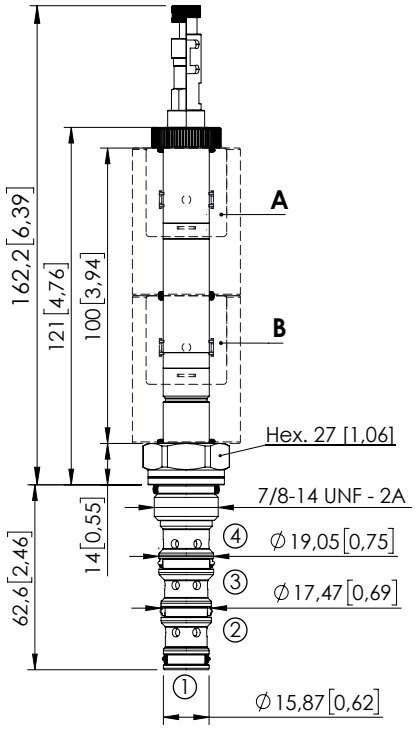

Dimensions: mm [inches]

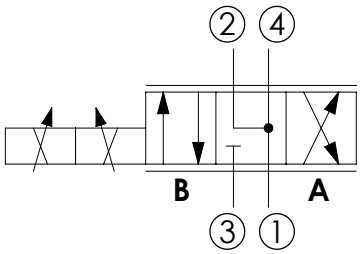

SPECIFICATIONS

Max. operating pressure:	350 bar (5000 psi)
Max. operating pressure on port 1:	210 bar (3000 psi)
Rated flow:	30 l/min (8 gpm)
Cavity:	SAE-10-4N
Weight:	0.20 kg (0,68 lbs)
Min. voltage required:	90% of nominal
Coil type:	M16
Ambient temperature:	-20/+50 °C (-4/+122 °F)
PWM range recommended:	100 Hz
Contamination class to ISO 4406:	See technical spec.
Seal kit:	RB600102
Installation torque:	55 - 62 Nm (41 - 46 ft-lb)
MTTFd:	150 - 1200 years: See technical spec.
Leakage:	120 cm³/min (@46 cSt) 7,3 in³/min (@46 cSt)

NOTES

For other configurations/quick codes not available in this catalogue page please consult factory

OPTIONS

Standard

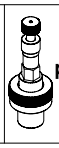
Push and pull manual override

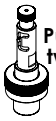
Push pull and twist manual override

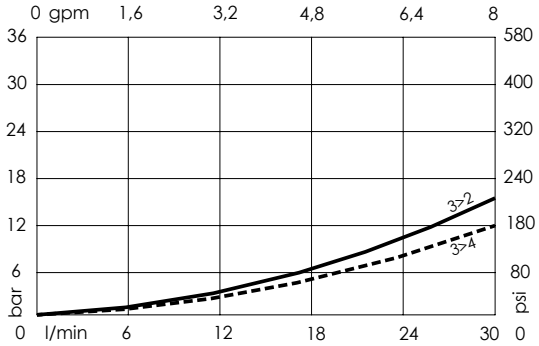

ORDERING CODES

Quick code	Description	Options	
CE001856	CEES-030-SEPN-52-S10-N350	Standard	
CE001857	CEES-030-SEPL-52-S10-N350	Push and pull manual override	
CE001858	CEES-030-SEPG-52-S10-N350	Push pull and twist manual override	

Revision E

SOLENOID OPERATED CARTRIDGE

CEFS-030-SEPN-106

DIRECT OPERATED
SPOOL TYPE

ATLANTIC Fluid Tech
WWW.SUMY.IR

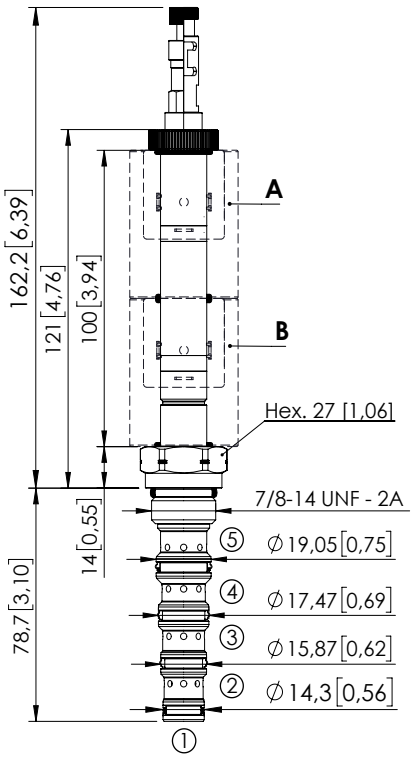

Dimensions: mm [inches]

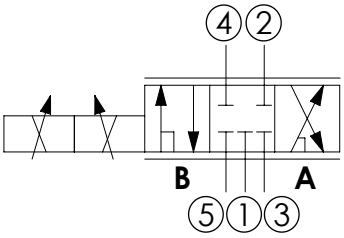

SPECIFICATIONS

Max. operating pressure:	350 bar (5000 psi)
Max. operating pressure on port 1:	210 bar (3000 psi)
Rated flow:	30 l/min (8 gpm)
Cavity:	SAE 10 5N
Weight:	0.22 kg (0,68 lbs)
Min. voltage required:	90% of nominal
Coil type:	M16
Ambient temperature:	-20/+50 °C (-4/+122 °F)
PWM range recommended:	100 Hz
Contamination class to ISO 4406:	See technical spec.
Seal kit:	RB900107
Installation torque:	55 - 62 Nm (41 - 46 ft-lb)
MTTFd:	150 - 1200 years: See technical spec.
Leakage:	120 cm³/min (@46 cSt) 7,3 in³/min (@46 cSt)

NOTES

For other configurations/quick codes not available in this catalogue page please consult factory

OPTIONS

Standard

Push and pull manual override

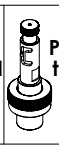
Push pull and twist manual override

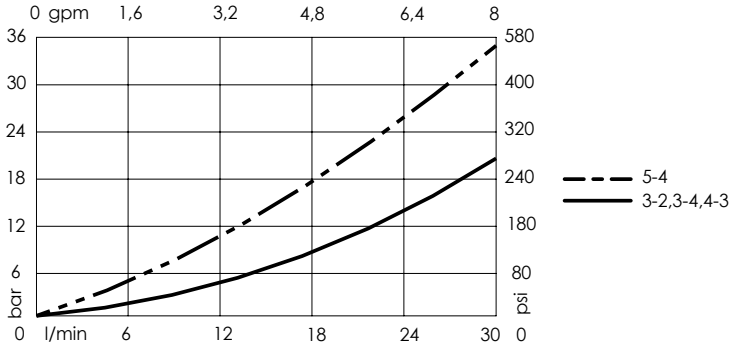

ORDERING CODES

Quick code	Description	Options	
CE001862	CEFS-030-SEPN-106-S10-N350	Standard	
CE001863	CEFS-030-SEPL-106-S10-N350	Push and pull manual override	
CE001864	CEFS-030-SEPG-106-S10-N350	Push pull and twist manual override	

Revision C

SOLENOID OPERATED CARTRIDGE

CEFS-030-SEPN-107

DIRECT OPERATED
SPOOL TYPE

ATLANTIC Fluid Tech
WWW.SUMY.IR

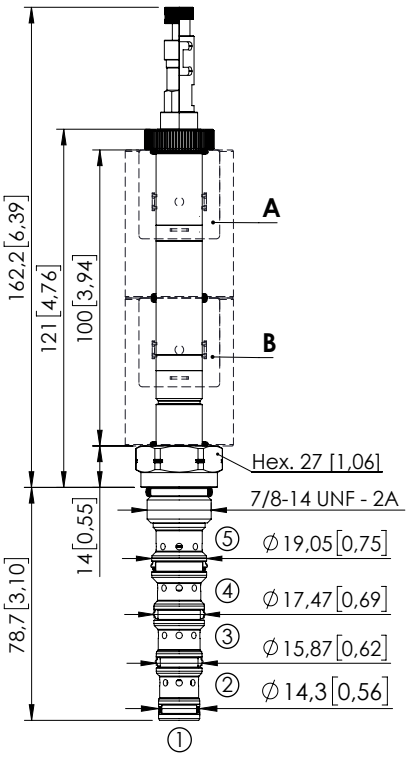

Dimensions: mm [inches]

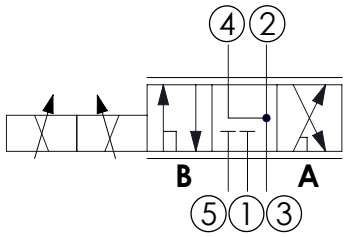

SPECIFICATIONS

Max. operating pressure:	350 bar (5000 psi)
Max. operating pressure on port 1:	210 bar (3000 psi)
Rated flow:	30 l/min (8 gpm)
Cavity:	SAE 10 5N
Weight:	0.22 kg (0,68 lbs)
Min. voltage required:	90% of nominal
Coil type:	M16
Ambient temperature:	-20/+50 °C (-4/+122 °F)
PWM range recommended:	100 Hz
Contamination class to ISO 4406:	See technical spec.
Seal kit:	RB900107
Installation torque:	55 - 62 Nm (41 - 46 ft-lb)
MTTFd:	150 - 1200 years: See technical spec.
Leakage:	120 cm³/min (@46 cSt) 7,3 in³/min (@46 cSt)

NOTES

For other configurations/quick codes not available in this catalogue page please consult factory

OPTIONS

Standard

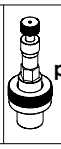
Push and pull manual override

Push pull and twist manual override

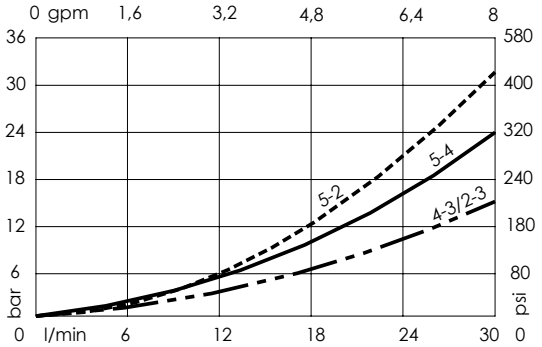

ORDERING CODES

Quick code	Description	Options	
CE001865	CEFS-030-SEPN-107-S10-N350	Standard	
CE001866	CEFS-030-SEPL-107-S10-N350	Push and pull manual override	
CE001867	CEFS-030-SEPG-107-S10-N350	Push pull and twist manual override	

Revision C

SOLENOID OPERATED CARTRIDGE

CEFS-030-SEPN-108

DIRECT OPERATED
SPOOL TYPE

ATLANTIC Fluid Tech
WWW.SUMY.IR

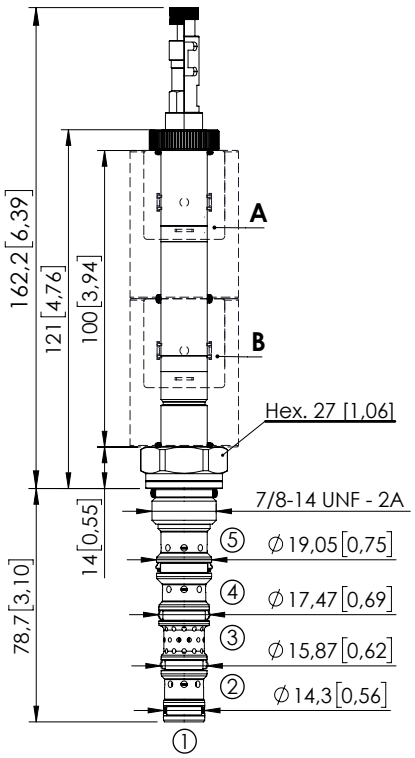

Dimensions: mm [inches]

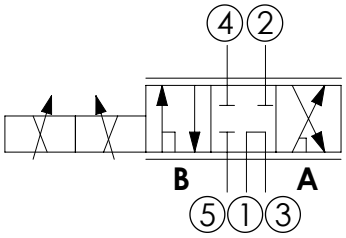

SPECIFICATIONS

Max. operating pressure:	350 bar (5000 psi)
Max. operating pressure on port 1:	210 bar (3000 psi)
Rated flow:	30 l/min (8 gpm)
Cavity:	SAE 10 5N
Weight:	0,22 kg (0,68 lbs)
Min. voltage required:	90% of nominal
Coil type:	M16
Ambient temperature:	-20/+50 °C (-4/+122 °F)
PWM range recommended:	100 Hz
Contamination class to ISO 4406:	See technical spec.
Seal kit:	RB900107
Installation torque:	55 - 62 Nm (41 - 46 ft-lb)
MTTFd:	150 - 1200 years: See technical spec.
Leakage:	120 cm³/min (@46 cSt) 7,3 in³/min (@46 cSt)

NOTES

For other configurations/quick codes not available in this catalogue page please consult factory

OPTIONS

Standard

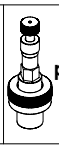
Push and pull manual override

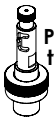
Push pull and twist manual override

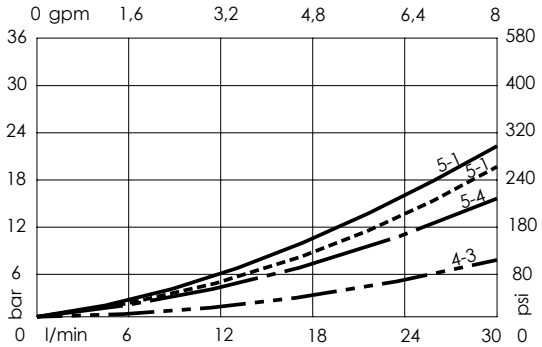

ORDERING CODES

Quick code	Description	Options	
CE001868	CEFS-030-SEPN-108-S10-N350	Standard	
CE001869	CEFS-030-SEPL-108-S10-N350	Push and pull manual override	
CE001870	CEFS-030-SEPG-108-S10-N350	Push pull and twist manual override	

Revision A

PROPORTIONAL VALVE CONTROLLER

ELPC-030-SCCB

ATLANTIC Fluid Tech
WWW.SUMY.IR

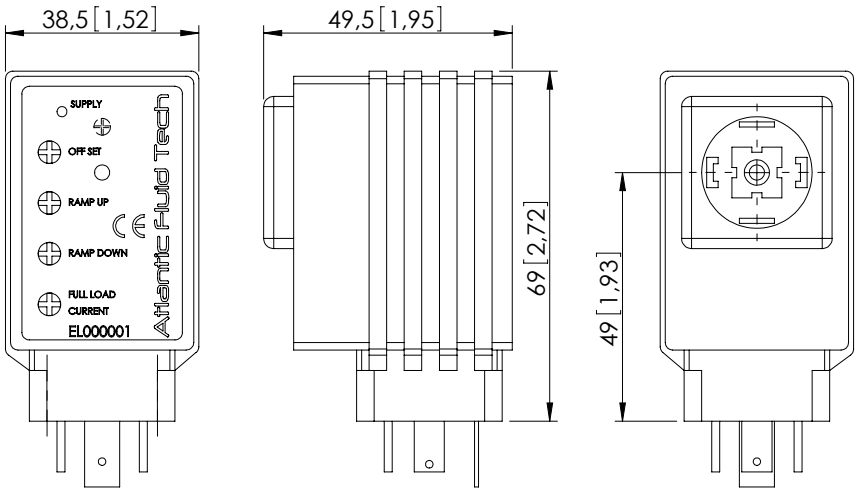

Max torque 0,5 Nm [0,37 ft-lb]

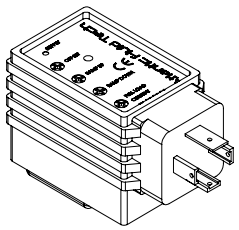

SPECIFICATIONS

Supply voltage: 12 - 30 VDC
Coil rating must be matched with supply voltage:
Rcoil<(Vsupply-1,5V) / Imax

Control input signal options:
5KΩ external potentiometer
(accepts 2KΩ to 10KΩ), or 0-10 VDC signal
(see connection diagram)

Output current: up to 2A

Minimum current: 0 - 0,6 A

Max current deviation in temperature range: 3%

Ramp up / ramp down: 0,1 to 10 sec
Ramp setting indipendent from current range

PWM frequency: 100 - 500 Hz

Operating conditions: -20 TO +70°C
0 to 85% relative humidity

Environmental protection: IP65
with cover and seals installed

Connector type: DIN 43650 - ISO 4400

CONNECTION EXAMPLE WITH JOYSTICK OR POTENTIOMETER

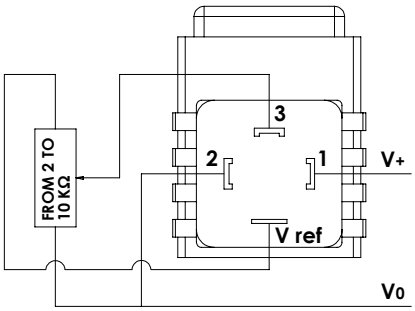

CONNECTION EXAMPLE WITH ANALOGIC SIGNAL

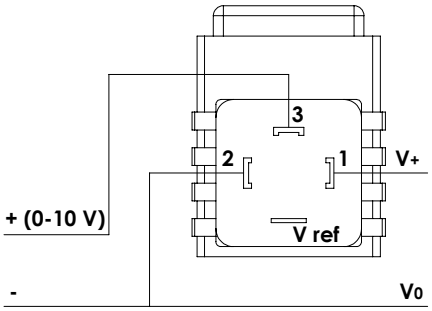

IMPORTANT

DO NOT REMOVE controller from solenoid when energized to avoid the risk of damaging it

SETTING INSTRUCTIONS

SUPPLY: led is on when current is supplied

OFFSET: to be used to set minimum current value (l/min-gpm), turn clockwise to increase setting

RAMP UP: to be used to set the ramp time from minimum (l/min-gpm) to maximum current value (l max-g max)

RAMP DOWN: to be used to set the ramp time from maximum (l max-g max) to minimum current value (l/min-gpm)

FULL LOAD CURRENT:to be used to set maximum current value (l max-g max), turn clockwise to increase setting

FREQ. ADJ.: this trimmer is inside the controller and is preset by factory, to be used to modify the PWM frequency

ORDERING CODES

Quick code	Description	
EL000001	Proportional controller ELPC-030-SCCB	

ATLANTIC
Fluid Tech
WWW.SUMY.IR

SECTION 10

Coils and Connectors

SECTION 10

COILS AND CONNECTORS

ATLANTIC Fluid Tech
WWW.SUMY.IR

Description	Type	Heat insulation class	Connector	Page
Coil M7 HS	M7 - For solenoid operated cartridge valve	H - 180°C (356 °F)	EN 175301-803 - DIN 43650 - ISO 4400	10.00.**010**
Coil M7 HS	M7 - For solenoid operated cartridge valve - RAC	H - 180°C (356 °F)	EN 175301-803 - DIN 43650 - ISO 4400	10.00.**010**
Coil M7 AJ	M7 - For solenoid operated cartridge valve	H - 180°C (356 °F)	Amp Junior	10.00.**010**
Coil M7 DT	M7 - For solenoid operated cartridge valve	H - 180°C (356 °F)	Deutsch - DT04-2P-L	10.00.**020**
Coil M7 DTV	M7 - For solenoid operated cartridge valve	H - 180°C (356 °F)	Deutsch - DT04-2P-V	10.00.**020**
Coil M7 DS	M7 - For solenoid operated cartridge valve	H - 180°C (356 °F)	Dual spades	10.00.**020**
Coil M7 CV	M7 - For solenoid operated cartridge valve	H - 180°C (356 °F)	Cable	10.00.**020**
Coil M3 DTV	M3 - For solenoid operated cartridge valve	H - 180°C (356 °F)	Deutsch - DT04-2P-V	10.00.**030**
Coil M14 HS	M14 - For solenoid operated cartridge valve	H - 180°C (356 °F)	EN 175301-803 - DIN 43650 - ISO 4400	10.00.**040**
Coil M14 AJ	M14 - For solenoid operated cartridge valve	H - 180°C (356 °F)	Amp Junior	10.00.**040**
Coil M14 DT	M14 - For solenoid operated cartridge valve	H - 180°C (356 °F)	Deutsch - DT04-2P-V	10.00.**040**
Coil M15 HS	M15 - For proportional solenoid operated cartridge valve	H - 180°C (356 °F)	EN 175301-803 - DIN 43650 - ISO 4400	10.00.**050**
Coil M15 AJ	M15 - For proportional solenoid operated cartridge valve	H - 180°C (356 °F)	Amp Junior	10.00.**050**
Coil M15 DT	M15 - For proportional solenoid operated cartridge valve	H - 180°C (356 °F)	Deutsch - DT04-2P-V	10.00.**050**
Coil M8 HS	M8 - For Ø19 tube diverter valve	H - 180°C (356 °F)	EN 175301-803 - DIN 43650 - ISO 4400	10.00.**060**
Coil M8 AJ	M8 - For Ø19 tube diverter valve	H - 180°C (356 °F)	Amp Junior	10.00.**060**
Coil M8 DT	M8 - For Ø19 tube diverter valve	H - 180°C (356 °F)	Deutsch - DT04-2P-V	10.00.**060**
Coil M16 HS	M16 - For solenoid operated cartridge valve	H - 180°C (356 °F)	EN 175301-803 - DIN 43650 - ISO 4400	10.00.**070**
Coil M16 AJ	M16 - For solenoid operated cartridge valve	H - 180°C (356 °F)	Amp Junior	10.00.**070**
Coil M16 DT	M16 - For solenoid operated cartridge valve	H - 180°C (356 °F)	Deutsch - DT04-2P-V	10.00.**070**
DIN Connector	IP67 - Standard / with VDR / with rectifier	-	EN 175301-803 - DIN 43650 - ISO 4400	10.00.**080**

COIL

COIL SERIES M7

ATLANTIC Fluid Tech
WWW.SUMY.IR

CURVES

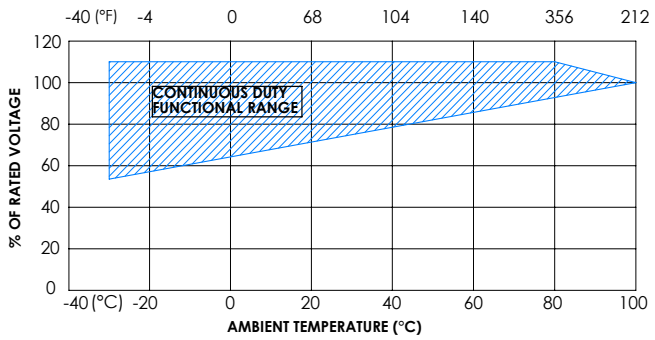

SPECIFICATION - NOTES

Heat insulation	Class H (180°C) (356°F)
Insulation class	See table (with all seals properly mounted)
Weight	See table
Ambient temperature	See graph
Inlet voltage	See graph
Contamination class to ISO 4406:	See technical spec.
MTTFd:	150 - 1200 years: See technical spec.

ED 100% in the functional range area.
Do not exceed the functional range.
For applications with working range close to graph limit please contact AFT sales network.
The seals supplied with the valve must be properly mounted.
Please refer to catalogue technical chapter for more info.
For other configurations/quick codes not available in this catalogue page please consult factory

DIN 43650 - ISO 4400

Code parts	Description	Voltage	Resistence (±7%)	Power (W)	Current (A)	Insul. class	Weight
AB000002	M7 HS 12V Class H	12 DC	7,2	20	1,67	IP65	0,217 kg (0,48 lbs)
AB000018	M7 HS 14V Class H	14 DC	9,8	20	1,43		
AB000003	M7 HS 24V Class H	24 DC	28,8	20	0,83		
AB000004	M7 HS 26V Class H	26 DC	33,8	20	0,77		
AB000043	M7 HS 10,5V Class H	10,5 DC	5,5	20	1,90		
AB000046	M7 HS 48V Class H	48 DC	115,2	20	0,42		

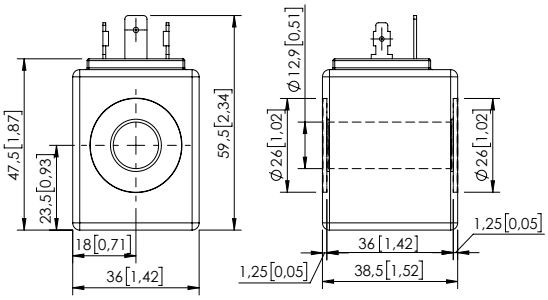

Dimensions: mm [inches]

DIN 43650 - ISO 4400 RAC VERSION

Code parts	Description	Voltage	Resistence (±7%)	Power (W)	Current (A)	Insul. class	Weight
AB000011	M7 HS 24V Class H	24 RAC	23,1	20	0,9	IP65	0,217 kg (0,48 lbs)
AB000012	M7 HS 110V Class H	110 RAC	605	20	0,18		
AB000007	M7 HS 220V Class H	220 RAC	2140	20	0,09		

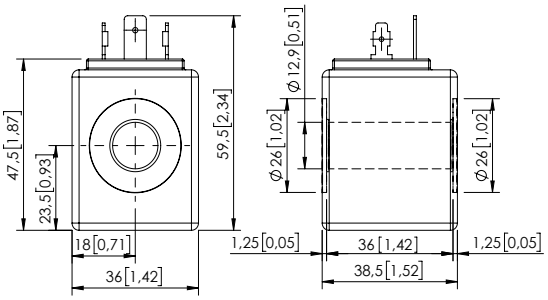

Dimensions: mm [inches]

AMP JUNIOR

Code parts		Voltage	Resistence (±7%)	Power (W)	Current (A)	Insul. class	Weight
AB000005	M7 AJ 12V Class H	12 DC	7,2	20	1,67	IP67	0,217 kg (0,48 lbs)
AB000014	M7 AJ 24V Class H	24 DC	28,8	20	0,83		
AB000010	M7 AJ 26V Class H	26 DC	33,8	20	0,77		

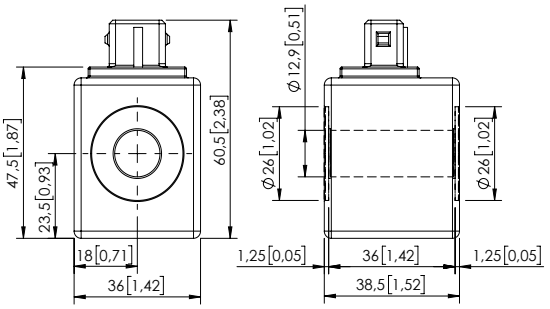

Dimensions: mm [inches]
Revision B1

COIL

COIL SERIES M7

ATLANTIC Fluid Tech
WWW.SUMY.IR

DEUTSCH DT04-2P-L

Code parts	Description	Voltage	Resistence (±7%)	Power (W)	Current (A)	Insul. class	Weight
AB000001	M7 DT 12V Class H	12 DC	7,2	20	1,67	IP69	0,217 kg (0,48 lbs)
AB000008	M7 DT 24V Class H	24 DC	28,8	20	0,83		

With bi-directional diode.

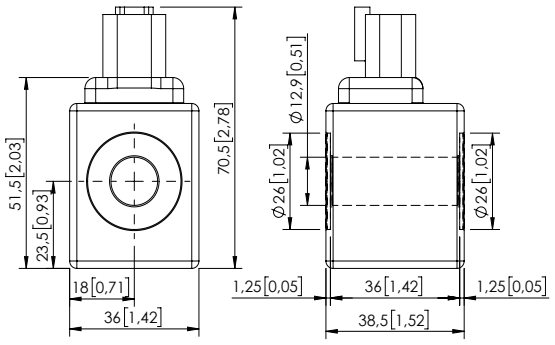

Dimensions: mm [inches]

DEUTSCH DT04-2P-V

Code parts	Description	Voltage	Resistence (±7%)	Power (W)	Current (A)	Insul. class	Weight
AB000022	M7 DTV 12V Class H	12 DC	7,2	20	1,67	IP69	0,217 kg (0,48 lbs)
AB000229	M7 DTV 14V Class H	14 DC	9,8	20	1,43		
AB000023	M7 DTV 24V Class H	24 DC	28,8	20	0,83		
AB000024	M7 DTV 26V Class H	26 DC	33,8	20	0,77		
AB000230	M7 DTV 28V Class H	28 DC	39,4	20	0,71		

With bi-directional diode.

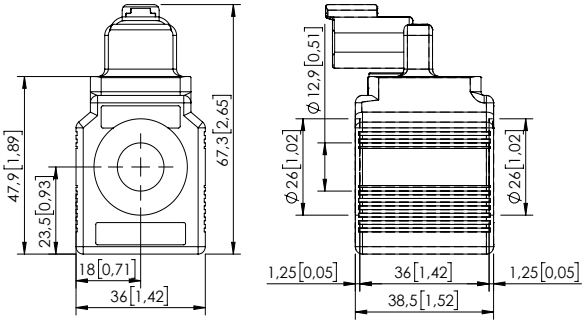

Dimensions: mm [inches]

DUAL SPADES

Code parts	Description	Voltage	Resistence (±7%)	Power (W)	Current (A)	Insul. class	Weight
AB000259	M7 DS 12V Class H	12 DC	7,2	20	1,67	IP65	0,217 kg (0,48 lbs)
AB000253	M7 DS 10V Class H	10 DC	5	20	2		
AB000260	M7 DS 24V Class H	24 DC	28,8	20	0,83		

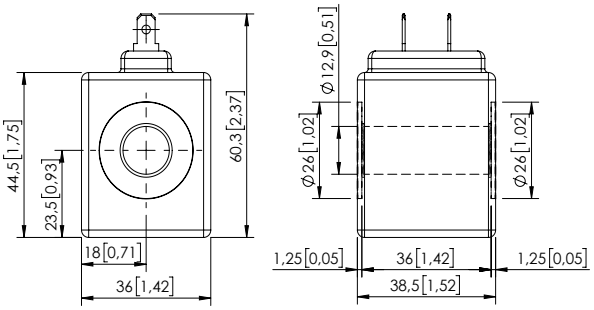

Dimensions: mm [inches]

CABLE

Code parts		Voltage	Resistence (±7%)	Power (W)	Current (A)	Insul. class	Weight
AB000039	M7 CV 12V Class H	12 DC	7,2	20	1,67	IP65	0,217 kg (0,48 lbs)
AB000114	M7 CV 24V Class H	24 DC	28,8	20	0,83		

Code parts		Voltage	Resistence (±7%)	Power (W)	Current (A)	Insul. class	Weight
AB000113	M7 CV 12V Class H	12 DC	7,2	20	1,67	IP65	0,217 kg (0,48 lbs)
AB000103	M7 CV 24V Class H	24 DC	28,8	20	0,83		

With bi-directional diode.

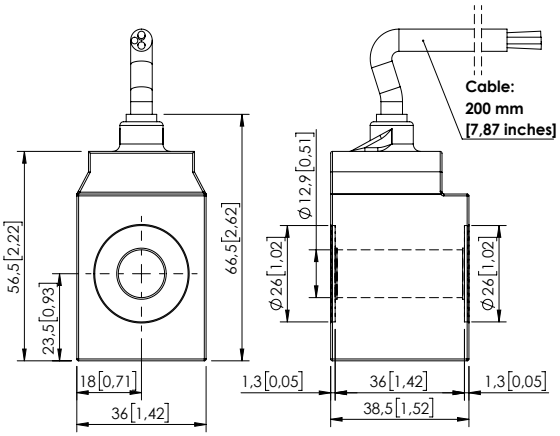

Dimensions: mm [inches]

Revision B1

COIL

COIL SERIES M3

ATLANTIC Fluid Tech
WWW.SUMY.IR

CURVES

SPECIFICATION - NOTES

Heat insulation	Class N (200°C) (392°F)
Insulation class	See table (with all seals properly mounted)
Weight	See table
Ambient temperature	-20° +80° C (-4/+176 °F)
Inlet voltage	±10% tol.
Contamination class to ISO 4406:	See technical spec.
MTTFd:	150 - 1200 years: See technical spec.
UL-certified coil	

For other configurations/quick codes not available in this catalogue page please consult factory

DEUTSCH DT04-2P-V

Code parts	Description	Voltage	Resistence (±7%)	Power (W)	Current (A)	Insul. class	Weight
AB000261	M3 DTV 12V Class H	12 DC	9	16	1,33	IP69K	0,400 kg (0,88 lbs)
AB000262	M3 DTV 24V Class H	24 DC	36	16	0,66		

With bi-directional diode.

Code parts	Description	Voltage	Resistence (±7%)	Power (W)	Current (A)	Insul. class	Weight
AB000269	M3 DTV 12V Class H	12 DC	9	16	1,33	IP69K	0,400 kg (0,88 lbs)
AB000266	M3 DTV 24V Class H	24 DC	36	16	0,66		

Without diode.

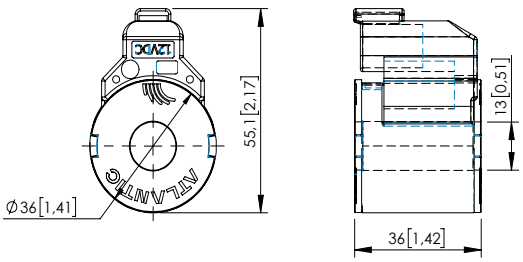

Dimensions: mm [inches]

COIL

COIL SERIES M14

ATLANTIC Fluid Tech
WWW.SUMY.IR

SPECIFICATION - NOTES

Heat insulation	Class H (180°C) (356°F)
Insulation class	See table (with all seals properly mounted)
Weight	See table
Ambient temperature	-20 + 50°C (-4/+122 °F)
Inlet voltage	±10% tol.
Contamination class to ISO 4406:	See technical spec.
MTTFd:	150 - 1200 years: See technical spec.

For other configurations/quick codes not available in this catalogue page please consult factory

DIN 43650 - ISO 4400

Code parts	Description	Voltage	Resistence (±7%)	Power (W)	Current (A)	Insul. class	Weight
AB000143	M14 HS 12V Class H	12 DC	5,53	26	2,17	IP65	0,200 kg (0,44 lbs)
AB000145	M14 HS 13V Class H	13 DC	6,5	26	2		
AB000144	M14 HS 24V Class H	24 DC	22,15	26	1,08		

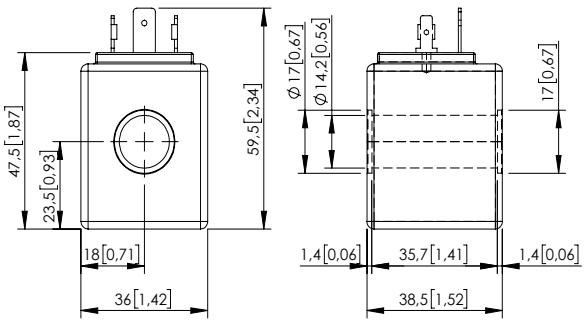

Dimensions: mm [inches]

AMP JUNIOR

Code parts		Voltage	Resistence (±7%)	Power (W)	Current (A)	Insul. class	Weight
AB000136	M14 AJ 12V Class H	12 DC	5,53	26	2,17	IP67	0,208 kg (0,46 lbs)
AB000181	M14 AJ 24V Class H	24 DC	22,15	26	1,08		
AB000131	M14 AJ 48V Class H	48 DC	88,6	26	0,54		

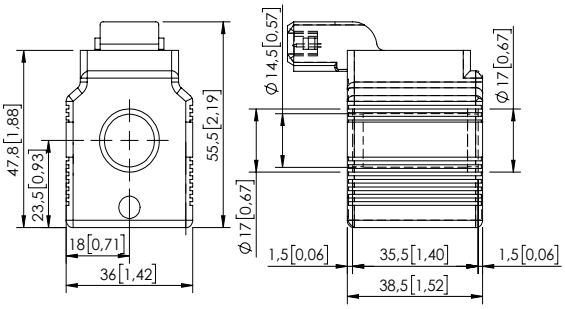

Dimensions: mm [inches]

DEUTSCH DT04-2P-V

Code parts	Description	Voltage	Resistence (±7%)	Power (W)	Current (A)	Insul. class	Weight
AB000132	M14 DTV 12V Class H	12 DC	5,53	26	2,17	IP69	0,217 kg (0,48 lbs)
AB000133	M14 DTV 24V Class H	24 DC	22,15	26	1,08		
AB000211	M14 DTV 26V Class H	26 DC	26	26	1		

With bi-directional diode.

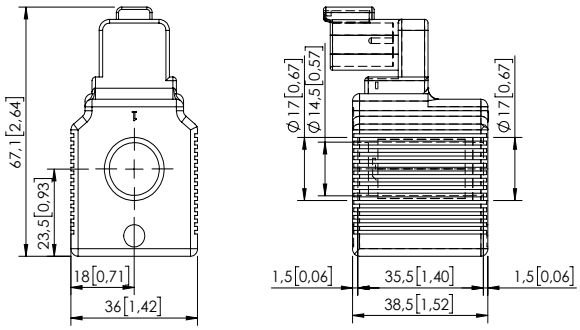

Dimensions: mm [inches]

Revision C

COIL

COIL SERIES M15

ATLANTIC Fluid Tech
WWW.SUMY.IR

SPECIFICATION - NOTES

Heat insulation	Class H (180°C) (356°F)
Insulation class	See table (with all seals properly mounted)
Weight	See table
Ambient temperature	-20 + 50°C (-4/+122 °F)
Inlet voltage	±10% tol.
Contamination class to ISO 4406:	See technical spec.
MTTFd:	150 - 1200 years: See technical spec.

For other configurations/quick codes not available in this catalogue page please consult factory

DIN 43650 - ISO 4400

Code parts	Description	Voltage	Resistence (±7%)	Power (W)	Current (A)	Insul. class	Weight
AB000137	M15 HS 12V Class H	12 DC	6,26	23	1,92	IP65	0,361 kg (0,79 lbs)
AB000138	M15 HS 24V Class H	24 DC	25,05	23	0,96		
AB000129	M15 HS 8V Class H	8 DC	2,78	23	2,88		

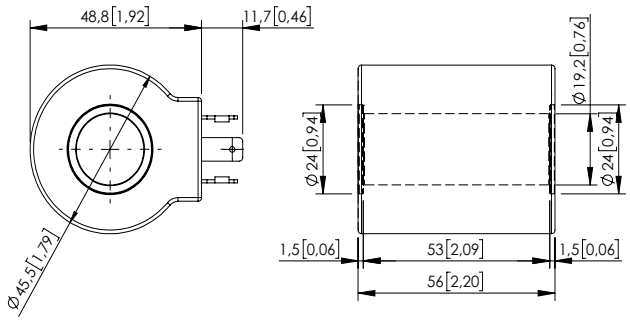

Dimensions: mm [inches]

AMP JUNIOR

Code parts		Voltage	Resistence (±7%)	Power (W)	Current (A)	Insul. class	Weight
AB000139	M15 AJ 12V Class H	12 DC	6,26	23	1,92	IP67	0,329 kg (0,73 lbs)
AB000140	M15 AJ 24V Class H	24 DC	25,05	23	0,96		

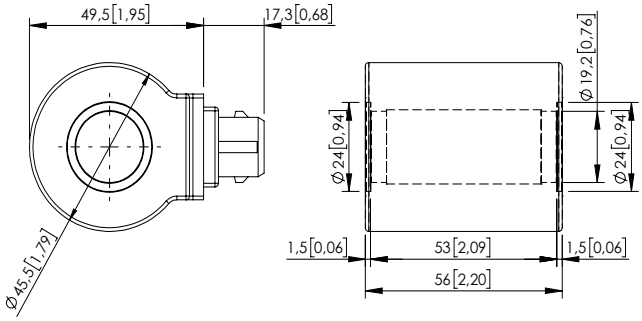

Dimensions: mm [inches]

DEUTSCH DT04-2P-V

Code parts	Description	Voltage	Resistence (±7%)	Power (W)	Current (A)	Insul. class	Weight
AB000141	M15 DTV 12V Class H	12 DC	6,26	23	1,92	IP69	0,329 kg (0,73 lbs)
AB000142	M15 DTV 24V Class H	24 DC	25,05	23	0,96		

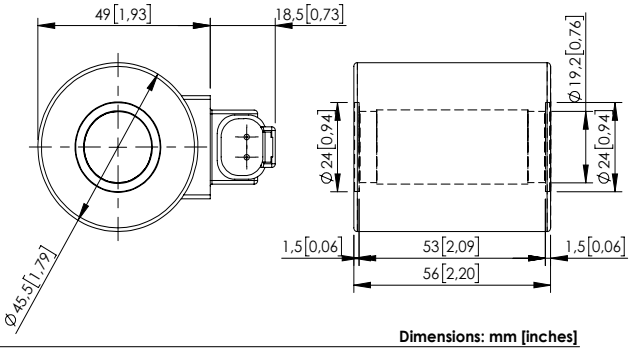

Dimensions: mm [inches]
Revision B1

COIL

COIL SERIES M8

ATLANTIC Fluid Tech
WWW.SUMY.IR

SPECIFICATION - NOTES

Heat insulation	Class H (180°C) (356°F)
Insulation class	See table (with all seals properly mounted)
Weight	See table
Ambient temperature	-20 + 50°C (-4/+122 °F)
Inlet voltage	±10% tol.
Contamination class to ISO 4406:	See technical spec.
MTTFd:	150 - 1200 years: See technical spec.

For other configurations/quick codes not available in this catalogue page please consult factory

DIN 43650 - ISO 4400

Code parts	Description	Voltage	Resistence (±7%)	Power (W)	Current (A)	Insul. class	Weight
AB000015	M8 HS 12V Class H	12 DC	4,36	33	2,75	IP65	0,38 kg (0,84 lbs)
AB000029	M8 HS 24V Class H	24 DC	17,45	33	1,38		
AB000159	M8 HS 14V Class H	14 DC	5,94	33	2,36		
AB000160	M8 HS 26V Class H	26 DC	20,48	33	1,27		
AB000158	M8 HS 48V Class H	48 DC	69,81	33	0,69		

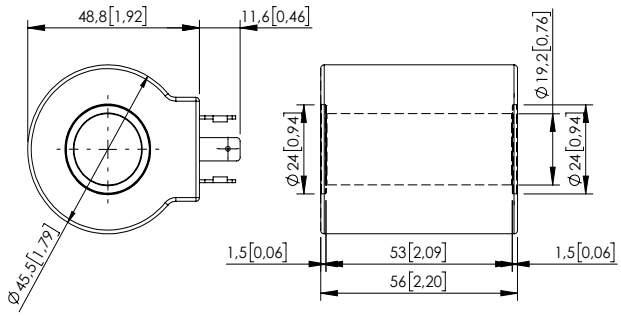

Dimensions: mm [inches]

AMP JUNIOR

Code parts		Voltage	Resistence (±7%)	Power (W)	Current (A)	Insul. class	Weight
AB000048	M8 AJ 12V Class H	12 DC	4,36	33	2,75	IP67	0,349 kg (0,77 lbs)
AB000224	M8 AJ 24V Class H	24 DC	17,45	33	1,38		

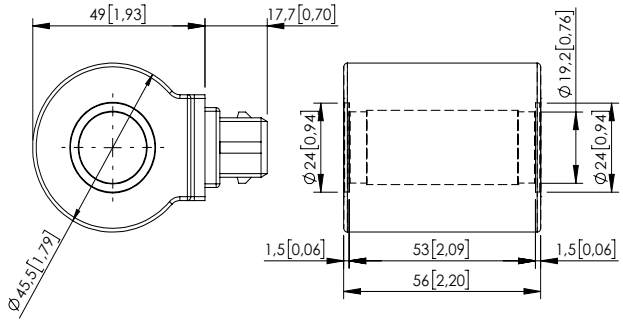

Dimensions: mm [inches]

DEUTSCH DT04-2P-V

Code parts	Description	Voltage	Resistence (±7%)	Power (W)	Current (A)	Insul. class	Weight
AB000104	M8 DTV 12V Class H	12 DC	4,36	33	2,75	IP69	0,348 kg (0,77 lbs)
AB000105	M8 DTV 24V Class H	24 DC	17,45	33	1,38		
AB000200	M8 DTV 26V Class H	26 DC	20,48	33	1,27		

With bi-directional diode.

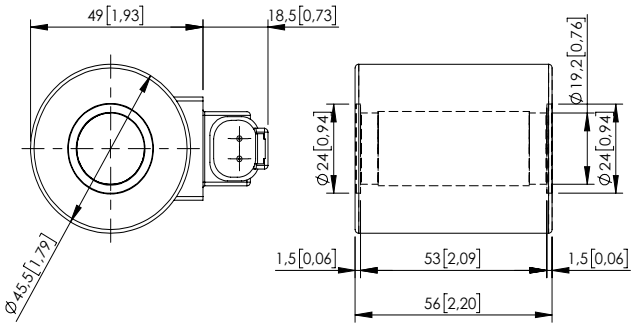

Dimensions: mm [inches]
Revision C1

COIL

COIL SERIES M16

ATLANTIC Fluid Tech
WWW.SUMY.IR

SPECIFICATION - NOTES

Heat insulation	Class H (180°C) (356°F)
Insulation class	See table (with all seals properly mounted)
Weight	See table
Ambient temperature	-20 + 50°C (-4/+122 °F)
Inlet voltage	±10% tol.
Contamination class to ISO 4406:	See technical spec.
MTTFd:	150 - 1200 years: See technical spec.

For other configurations/quick codes not available in this catalogue page please consult factory

DIN 43650 - ISO 4400

Code parts	Description	Voltage	Resistence (±7%)	Power (W)	Current (A)	Insul. class	Weight
AB000222	M16 HS 12V Class H	12 DC	5,54	26	2,17	IP65	0,3 kg (0,66 lbs)
AB000236	M16 HS 24V Class H	24 DC	22,15	26	1,08		
AB000234	M16 HS 48V Class H	48 DC	88,62	26	0,54		

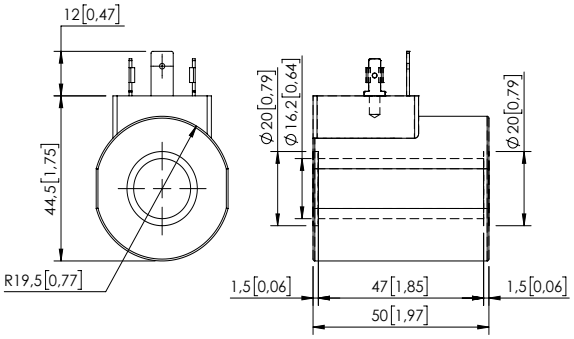

Dimensions: mm [inches]

AMP JUNIOR

Code parts		Voltage	Resistence (±7%)	Power (W)	Current (A)	Insul. class	Weight
AB000218	M16 AJ 12V Class H	12 DC	5,54	26	2,17	IP67	0,3 kg (0,66 lbs)
AB000252	M16 AJ 24V Class H	24 DC	22,15	26	1,08		

With bi-directional diode.

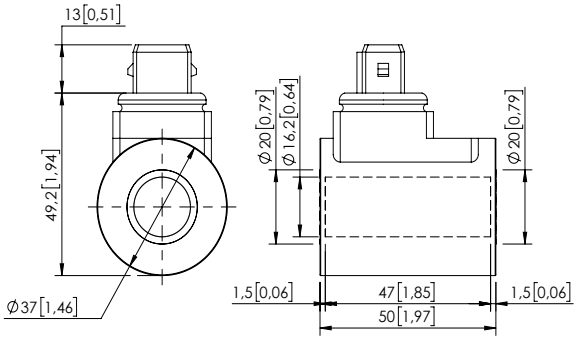

Dimensions: mm [inches]

DEUTSCH DT04-2P-V

Code parts	Description	Voltage	Resistence (±7%)	Power (W)	Current (A)	Insul. class	Weight
AB000209	M16 DTV 12V Class H	12 DC	5,54	26	2,17	IP69	0,33 kg (0,66 lbs)
AB000212	M16 DTV 24V Class H	24 DC	22,15	26	1,08		
AB000210	M16 DTV 26V Class H	26 DC	26	26	1		

With bi-directional diode.

Code parts	Description	Voltage	Resistence (±7%)	Power (W)	Current (A)	Insul. class	Weight
AB000274	M16 DTV 12V Class H	12 DC	5,54	26	2,17	IP69	0,33 kg (0,66 lbs)
AB000267	M16 DTV 24V Class H	24 DC	22,15	26	1,08		

Without diode.

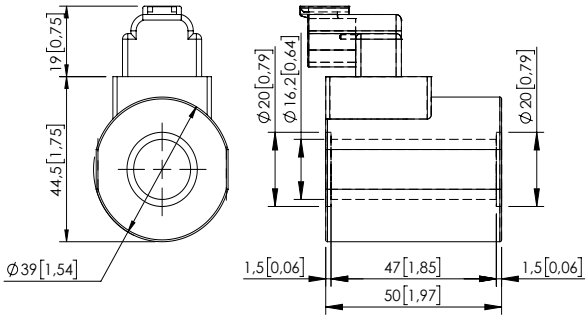

Dimensions: mm [inches]

Revision B2

CONNECTOR

DIN CONNECTOR

ATLANTIC Fluid Tech
WWW.SUMY.IR

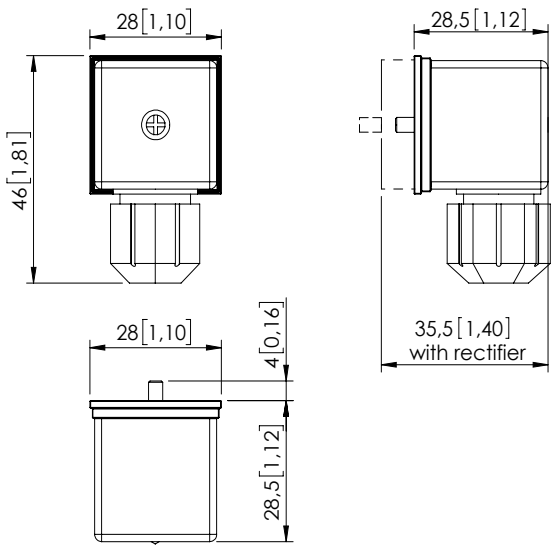

Dimensions: mm [inches]

SPECIFICATION - NOTES

Voltage rating	AC: up to 250V max. DC: up to 300V max.
Max. current	16 A
Contact resistance	≤ 4 mΩ
Max. conductor	1,5 mm2 (1,6 fb2)
Cable range	Ø4,0 to Ø9,0 mm (Ø0,15 to Ø0,35 fb)
Protection class	IP67 EN60529
Seal	Nitrile rubber
Poles	2 + ground
Connector	EN 175301-803 (DIN 43650)
MTTFd:	150 - 1200 years: See technical spec.

For other configurations/quick codes not available in this catalogue page please consult factory

SCHEME

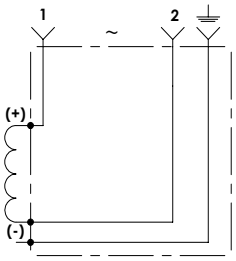

Standard circuit

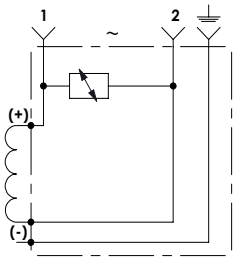

Circuit with VDR

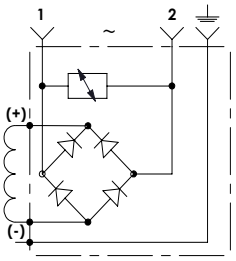

Circuit with rectifier and VDR

ORDERING CODES

Code parts	Colour	VDR	LED	Rectifier	Voltage
PV000171	Black	No	No	No	12V to 230V
PV000195	Black	Yes	No	No	12V DC
PV000349	Black	Yes	No	No	24V DC
PV000347	Black	Yes	No	Yes	12V RAC
PV000198	Transparent	Yes	Yes	No	12V DC
PV000348	Black	Yes	No	Yes	24V RAC
PV000196	Transparent	Yes	Yes	No	24V DC
PV000199	Black	Yes	No	Yes	230V RAC
PV000243	Transparent	Yes	Yes	No	230V DC

ATLANTIC
Fluid Tech

WWW.SUMY.IR

SECTION 11

Accessories and Spare

SECTION 11

ACCESSORIES AND SPARE

ATLANTIC Fluid Tech
WWW.SUMY.IR

Hydraulic scheme	Valve description	Valve type	Rated flow l/min (gpm)	Max. pressure bar (psi)	Installation	Main port size or cavity type	Page
	Filter G 3/8"	300 micron filtration	50 (13)	Δp 35 (Δp 500)	Insert	G1/4"	11.00.**010**
	Filter G 1/4"	300 micron filtration	25 (7)		Insert	G3/8"	11.00.**010**
	Filter G 1/8"	300 micron filtration	10 (3)		Insert	G1/8"	11.00.**010**
	Manual override	Detent type	-	-	Screw	-	11.00.**020**
	Sleeve body G 1/4"	For hose burst and check valve	-	350 (5000)	In line	G1/4"	11.00.**030**
	Sleeve body G 3/8"	For hose burst and check valve	-	350 (5000)	In line	G3/8"	11.00.**030**
	Sleeve body G 1/2"	For hose burst and check valve	-	350 (5000)	In line	G1/2"	11.00.**030**
	Sleeve body G 3/4"	For hose burst and check valve	-	350 (5000)	In line	G3/4"	11.00.**030**
	Sleeve body G 1/4"	For flow control valve	-	350 (5000)	In line	G1/4"	11.00.**040**
	Sleeve body G 3/8"	For flow control valve	-	350 (5000)	In line	G3/8"	11.00.**040**
	Sleeve body G 1/2"	For flow control valve	-	350 (5000)	In line	G1/2"	11.00.**040**
	Sleeve body G 3/4"	For flow control valve	-	350 (5000)	In line	G3/4"	11.00.**040**
	CFSN-090-PBSR-06	For flow control valve	0 - 6 (0 - 2)	350 (5000)	In line	VP000132	11.00.**050**
	CFSN-090-PBSR-12	For flow control valve	0 - 12 (0 - 3)	350 (5000)	In line	VP000132	11.00.**050**
	CFSN-090-PBSR-25	For flow control valve	0 - 25 (0 - 7)	350 (5000)	In line	VP000132	11.00.**050**
	CFSN-090-PBSR-32	For flow control valve	0 - 32 (0 - 8)	350 (5000)	In line	VP000132	11.00.**050**
	CFSN-090-PBSR-50	For flow control valve	0 - 50 (0 - 13)	350 (5000)	In line	VP000132	11.00.**050**
	CFSN-090-PBSR-63	For flow control valve	0 - 63 (0 - 17)	350 (5000)	In line	VP000132	11.00.**050**
	CFSN-090-PBSR-70	For flow control valve	0 - 70 (0 - 19)	350 (5000)	In line	VP000132	11.00.**050**
	CFSN-090-PBSR-80	For flow control valve	0 - 80 (0 - 21)	350 (5000)	In line	VP000132	11.00.**050**
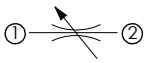	CFSN-200-BHSR	For flow control valve	-	350 (5000)	In line	VP000096 VP000152	11.00.**060**
	CFSN-200-BVSR	For flow control valve	-	350 (5000)	In line	VP000096 VP000152	11.00.**060**
	CFSN-200-BMSR	For flow control valve	-	350 (5000)	In line	VP000096 VP000152	11.00.**060**
	CFSN-090-BHSR	For flow control valve	-	350 (5000)	In line	VP000132	11.00.**060**
	CFSN-090-BVSR	For flow control valve	-	350 (5000)	In line	VP000132	11.00.**060**
	CFSN-090-BMSR	For flow control valve	-	350 (5000)	In line	VP000132	11.00.**060**
	CFSN-035-BHSR	For flow control valve	-	350 (5000)	In line	VP000132	11.00.**060**
	CFSN-035-BVSR	For flow control valve	-	350 (5000)	In line	VP000132	11.00.**060**
	CFSN-035-BMSR	For flow control valve	-	350 (5000)	In line	VP000132	11.00.**060**
	Seal kit	Cavity Personalized	-	-	-	-	11.00.**070**
		Cavity SAE	-	-	-	-	11.00.**080**

ACCESSORIES

FILTER

SCREW IN FILTER

ATLANTIC Fluid Tech
WWW.SUMY.IR

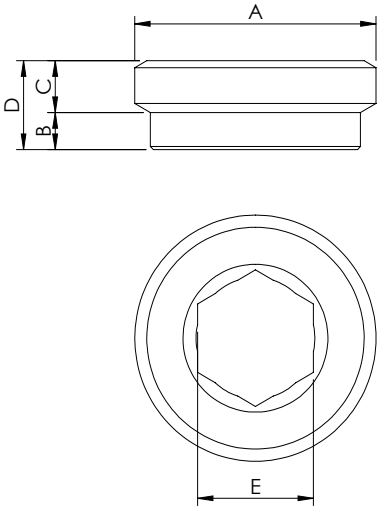

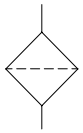

Dimensions: mm [inches]

SPECIFICATIONS

Max. operating Δp:	35 bar (500 psi)
Rated flow:	See table
Weight:	8 g (0,02 lbs)
Cavity:	See table
Contamination class to ISO 4406:	See technical spec.
MTTFd:	150 - 1200 years: See technical spec.

For other configurations/quick codes not available in this catalogue page please consult factory

APPLICATION LIMITATIONS

Not suitable for use with:

-fast acting valve
-cold oil
-high viscosity oil
-other conditions creating pressure bdrop greater than 35 bar (500 psi)
-max. operatig pressure is 350 bar (5000 psi)

CURVES

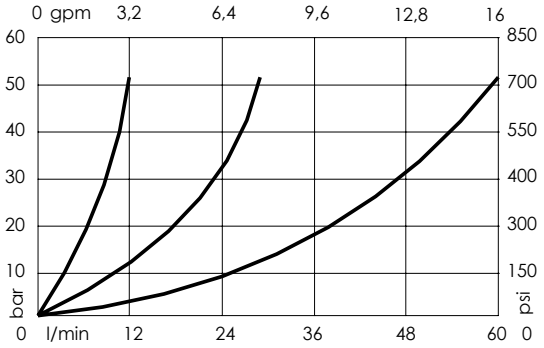

ORDERING CODES

Quick code	Description	Max. flow	Filtration	A	B	C	D	E	Installation torque
CT000002	Filter G 3/8"	50 l/min (13 gpm)	300 micron (0,0118 in)	G 3/8"	2,5 [0,10]	3,5 [0,14]	6 [0,24]	8 [0,31]	10 Nm (7 ft-lb)
CT000003	Filter G 1/4"	25 l/min (7 gpm)	300 micron (0,0118 in)	G 1/4"	2 [0,08]	3 [0,12]	5 [0,20]	6 [0,24]	5 Nm (4 ft-lb)
CT000004	Filter G 1/8"	10 l/min (3 gpm)	300 micron (0,0118 in)	G 1/8"	1,6 [0,06]	2,2 [0,09]	3,8 [0,15]	5 [0,20]	3 Nm (2 ft-lb)

Revision A1

ACCESSORIES

MANUAL OVERRIDE

DETENT TYPE

ATLANTIC Fluid Tech
WWW.SUMY.IR

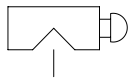

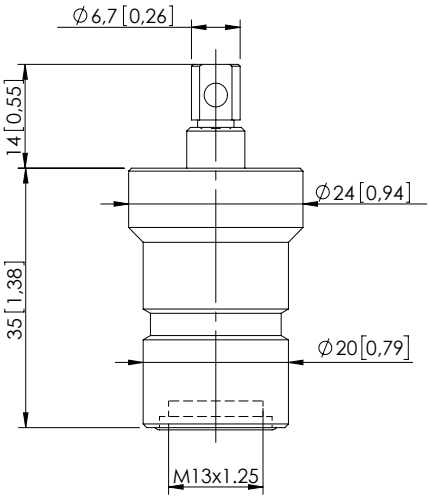

Dimensions: mm [inches]

NOTES

Suitable for push style override solenoid valves.

ORDERING CODES

Quick code	Description	
ST000364	Manula override	

Revision C1

SLEEVE BODY

SLEEVE

ATLANTIC Fluid Tech
WWW.SUMY.IR

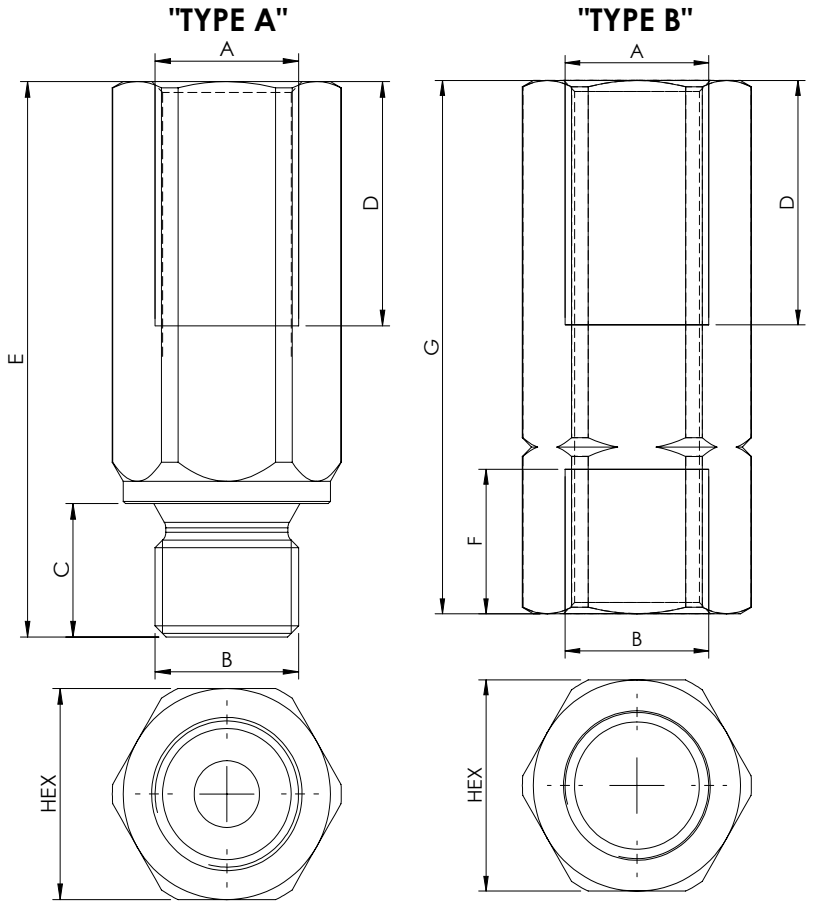

Dimensions: mm [inches]

SPECIFICATIONS

Max. operating pressure:	350 bar (5000 psi)
Material:	Steel
Contamination class to ISO 4406:	See technical spec.
MTTFd:	150 - 1200 years: See technical spec.

NOTES

Suitable for:
-Hose burst valve (CFHN-XXX-MHST)

For other configurations/quick codes not available in this catalogue page please consult factory

ORDERING CODES

Quick code "TYPE A"	Quick code "TYPE B"	A/B	C	D	E	F	G	Hex.	Weight "TYPE A"	Weight "TYPE B"
PC000127	PC000315	G 1/4"	12 [0,47]	22 [0,86]	50 [1,97]	13 [0,51]	48 [1,89]	19 [0,75]	0,07 kg (0,15 lb)	0,07 kg (0,15 lb)
PC000128	PC000260	G 3/8"	12 [0,47]	26 [1,02]	55 [2,17]	13 [0,51]	52 [2,05]	22 [0,87]	0,09 kg (0,20 lb)	0,09 kg (0,20 lb)
PC000129	PC000349	G 1/2"	14 [0,55]	30 [1,18]	65 [2,55]	15 [0,59]	60 [2,36]	27 [1,06]	0,16 kg (0,35 lb)	0,15 kg (0,33 lb)
PC000130	PC000496	G 3/4"	16 [0,63]	38 [1,49]	78 [3,07]	17 [0,66]	72 [2,83]	32 [1,26]	0,25 kg (0,55 lb)	0,23 kg (0,51 lb)
PC000580	PC000581	G 1"	18 [0,70]	47 [1,85]	92 [3,62]	19 [0,74]	85 [3,34]	41 [1,61]	0,50 kg (1,1 lb)	0,46 kg (1,0 lb)

Revision B

SLEEVE BODY

SLEEVE

ATLANTIC Fluid Tech
WWW.SUMY.IR

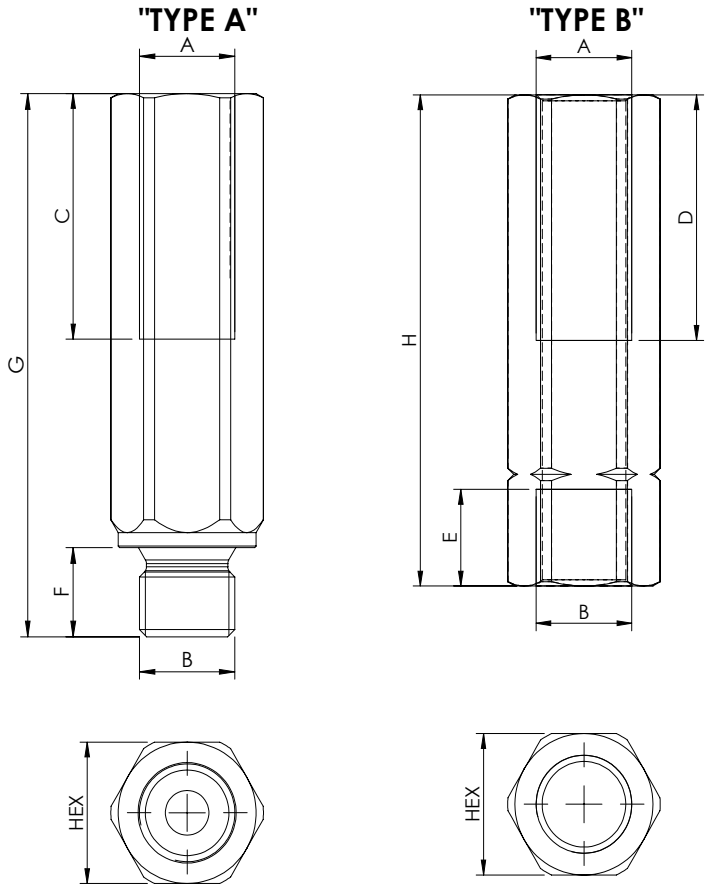

Dimensions: mm [inches]

SPECIFICATIONS

Max. operating pressure:	350 bar (5000 psi)
Material:	Steel
Contamination class to ISO 4406:	See technical spec.
MTTFd:	150 - 1200 years: See technical spec.

NOTES

Suitable for:
-Flow control valves (CFST-XXX-MDST)

For other configurations/quick codes not available in this catalogue page please consult factory

ORDERING CODES

Quick code "TYPE A"	Quick code "TYPE B"	A/B	C	D	E	F	G	H	Hex.	Weight "TYPE A"	Weight "TYPE B"
PC000196	PC000232	G 1/4"	33 [1,30]	33 [1,30]	13 [0,51]	12 [0,47]	73 [2,87]	66 [2,60]	19 [0,75]	0,12 kg (0,26 lb)	0,10 kg (0,22 lb)
PC000197	PC000249	G 3/8"	40 [1,57]	34 [1,34]	13 [0,51]	12 [0,47]	82 [3,23]	70 [2,76]	22 [0,87]	0,15 kg (0,33 lb)	0,13 kg (0,30 lb)
PC000162	PC000462	G 1/2"	45 [1,77]	40 [1,57]	15 [0,59]	14 [0,55]	96 [3,78]	80 [3,15]	27 [1,06]	0,25 kg (0,55 lb)	0,21 kg (0,46 lb)
PC000198	PC000165	G 3/4"	51 [2,01]	51 [2,01]	17 [0,66]	16 [0,63]	105 [4,13]	100 [3,94]	32 [1,26]	0,35 kg (0,77 lb)	0,32 kg (0,70 lb)

Revision B1

ACCESSORIES

CFSN-090-BPSR

FLOW REGULATOR
SPARE PART

ATLANTIC Fluid Tech
WWW.SUMY.IR

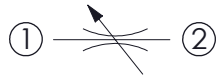

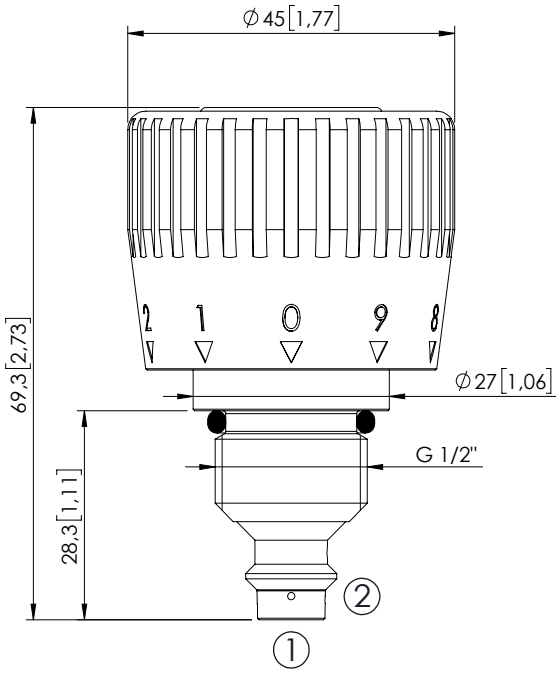

Dimensions: mm [inches]

SPECIFICATIONS

Max. operating pressure:	350 bar (5000 psi)
Rated flow:	80 l/min (21 gpm)
Cavity:	VP000132
Weight:	0,25 kg 0,55 lbs)
Installation torque:	130 - 140 Nm (96 - 103 ft-lb)
Seal kit:	RC700132
Contamination class to ISO 4406:	See technical spec.
MTTFd:	150 - 1200 years: See technical spec.

NOTES

Components we be supplied partially disassembled.
Contact AFT sales network for assembling instruction
For other configurations/quick codes not available in this catalogue page please consult factory

OPTIONS

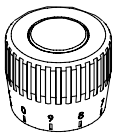

Graduated handknob for flow regulation under pressure

ORDERING CODES

Quick code	Description	Flow range adjustment	Options
CF000237	CFSN-090-BMSR-06-132-N350	0-6 l/min (0-2 gpm)	Graduated handknob
CF000238	CFSN-090-BMSR-12-132-N350	0-12 l/min (0-3 gpm)	Graduated handknob
CF000239	CFSN-090-BMSR-25-132-N350	0-25 l/min (7 gpm)	Graduated handknob
CF000240	CFSN-090-BMSR-32-132-N350	0-32 l/min (0-8 gpm)	Graduated handknob
CF000392	CFSN-090-BMSR-50-132-N350	0-50 l/min (0-13 gpm)	Graduated handknob
CF000242	CFSN-090-BMSR-63-132-N350	0-63 l/min (0-17 gpm)	Graduated handknob
CF000243	CFSN-090-BMSR-70-132-N350	0-70 l/min (0-19 gpm)	Graduated handknob
CF000244	CFSN-090-BMSR-80-132-N350	0-80 l/min (0-21 gpm)	Graduated handknob

Revision C1

ACCESSORIES

FLOW CONTROL

ATLANTIC Fluid Tech
WWW.SUMY.IR

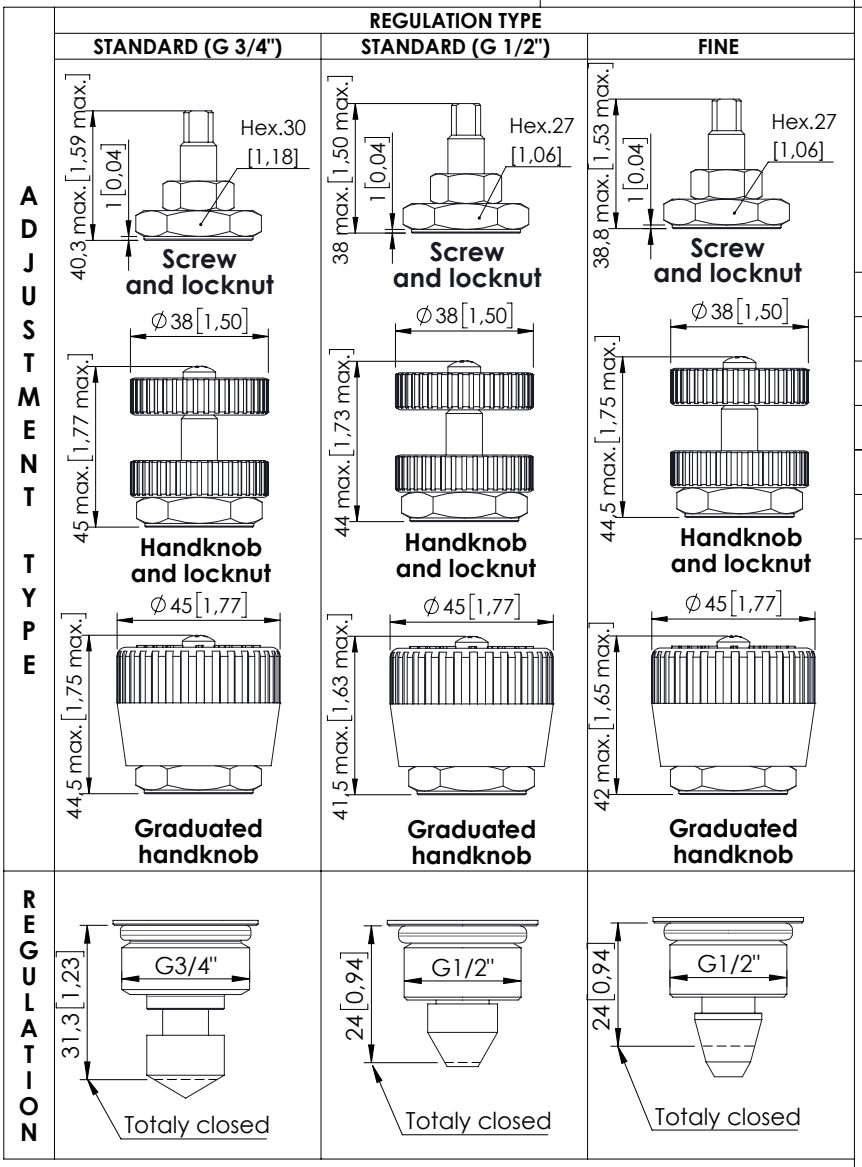

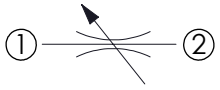

SPECIFICATIONS

Max. operating pressure:	350 bar (5000 psi)
Rated flow:	See table
Cavity:	See table
Contamination class to ISO 4406:	See technical spec.
MTTFd:	150 - 1200 years: See technical spec.

NOTES

Dimensions: mm [inches]

-Spare parts for flow regulations parts parts in body.
-Contact AFT sales network for assembling instruction.

For other configurations/quick codes not available in this catalogue page please consult factory

ORDERING CODES

Quick code	Description	Options	Regulated sensivity	Max. flow regulation	Cavity	Installation torque
CF000015	CFSN-200-BHSR-NP-096-N350	Screw and locknut	Standard (G 3/4")	90-190 l/min (24-50 gpm)	VP000096 VP000152	120-150 Nm (89-111 ft-lb)
CF000030	CFSN-200-BVSR-NP-096-N350	Handknob and locknut	Standard (G 3/4")	90-190 l/min (24-50 gpm)	VP000096 VP000152	120-150 Nm (89-111 ft-lb)
CF000042	CFSN-200-BMSR-NP-096-N350	Graduated handknob	Standard (G 3/4")	90-190 l/min (24-50 gpm)	VP000096 VP000152	120-150 Nm (89-111 ft-lb)
CF000029	CFSN-090-BHSR-NP-132-N350	Screw and locknut	Standard (G 1/2")	55 l/min (15 gpm)	VP000132	75-85 Nm (55-63 ft-lb)
CF000019	CFSN-090-BVSR-NP-132-N350	Handknob and locknut	Standard (G 1/2")	55 l/min (15 gpm)	VP000132	75-85 Nm (55-63 ft-lb)
CF000033	CFSN-090-BMSR-NP-132-N350	Graduated handknob	Standard (G 1/2")	55 l/min (15 gpm)	VP000132	75-85 Nm (55-63 ft-lb)
CF000036	CFSN-035-BHSR-NP-132-N350	Screw and locknut	Fine	30 l/min (8 gpm)	VP000132	75-85 Nm (55-63 ft-lb)
CF000037	CFSN-035-BVSR-NP-132-N350	Handknob and locknut	Fine	30 l/min (8 gpm)	VP000132	75-85 Nm (55-63 ft-lb)
CF000034	CFSN-035-BMSR-NP-132-N350	Graduated handknob	Fine	30 l/min (8 gpm)	VP000132	75-85 Nm (55-63 ft-lb)

Revision A1

SEAL KIT-STANDARD CAVITIES

ATLANTIC Fluid Tech
WWW.SUMY.IR

CAVITY	BACKUP RING TYPE	NBR 70	NBR 90	VITON 80
SAE-08-2N	Single backup ring	RA700081	RA900081	
	Double backup ring	RB700081	RB900081	
SAE-10-2N	Single backup ring	RA700082	RA900082	
	Double backup ring	RB700082	RB900082	
SAE-12-2N	Single backup ring	RA700083	RA900083	
	Double backup ring			
SAE-16-2N	Single backup ring	RA700084	RA900084	
	Double backup ring			
SAE-20-2N	Single backup ring		RA900085	
	Double backup ring			
SAE-08-3C	Single backup ring	RA700086		
	Double backup ring			
SAE-10-3C	Single backup ring	RA700087		
	Double backup ring	RB700087		
SAE-12-3C	Single backup ring			
	Double backup ring			
SAE-16-3C	Single backup ring			
	Double backup ring			
SAE-20-3C	Single backup ring			
	Double backup ring		RB900090	
SAE-08-3N	Single backup ring			
	Double backup ring	RB700091		
SAE-10-3N	Single backup ring	RA700092		
	Double backup ring	RB700092		
SAE-12-3N	Single backup ring	RA700093		
	Double backup ring			
SAE-16-3N	Single backup ring			
	Double backup ring	RB700094		
SAE-20-3N	Single backup ring			
	Double backup ring			
SAE-08-4N	Single backup ring			
	Double backup ring	RB700101		
SAE-10-4N	Single backup ring			
	Double backup ring	RB700102		
SAE-124-N	Single backup ring			
	Double backup ring	RB700103		
SAE-16-4N	Single backup ring			
	Double backup ring	RB700104		
SAE-20-4N	Single backup ring			
	Double backup ring			

SEAL KIT-SPECIAL CAVITIES

ATLANTIC Fluid Tech
WWW.SUMY.IR

CAVITY	BACKUP RING TYPE	NBR 70	NBR 90	VITON 80
VP000005	Single backup ring	RC700005		
	Double backup ring			
VP000006	Single backup ring	RC700006		
	Double backup ring			
VP000008	Single backup ring	RC700008		
	Double backup ring			
VP000013	Single backup ring		RC900013	
	Double backup ring		RD900013	
VP000015	Single backup ring	RC700015		
	Double backup ring			
VP000016	Single backup ring	RC700016		
	Double backup ring			
VP000018	Single backup ring	-		
	Double backup ring	-		
VP000028	Single backup ring	RC700028		
	Double backup ring			
VP000038	Single backup ring	RC700038		
	Double backup ring			
VP000057	Single backup ring		RC900057	
	Double backup ring		RD900057	
VP000058	Single backup ring	RC700058		
	Double backup ring			
VP000065	Single backup ring		RC900065	
	Double backup ring		RD900065	
VP000070	Single backup ring	RC700070		
	Double backup ring			
VP000079	Single backup ring	-		
	Double backup ring	-		
VP000080	Single backup ring		RC900080	
	Double backup ring			
VP000086	Single backup ring	RC700086		
	Double backup ring			
VP000096	Single backup ring			
	Double backup ring			
VP000098	Single backup ring	RC700098		
	Double backup ring			
VP000120	Single backup ring			
	Double backup ring	RD700120		
VP000121	Single backup ring			
	Double backup ring	RD700121		

SEAL KIT - SPECIAL CAVITIES

ATLANTIC Fluid Tech
WWW.SUMY.IR

CAVITY	BACKUP RING TYPE	NBR 70	NBR 90	VITON 80
VP000127	Single backup ring			
	Double backup ring		RD900127	
VP000128	Single backup ring			
	Double backup ring		RD900128	
VP000132	Single backup ring			
	Double backup ring	RC700132		
VP000154	Single backup ring		RC900154	
	Double backup ring			
VP000158	Single backup ring	-		
	Double backup ring	-		
VP000161	Single backup ring	RC700161		
	Double backup ring			
VP000165	Single backup ring	RC700165		
	Double backup ring			
VP000166	Single backup ring	RC700166		
	Double backup ring			
VP000174	Single backup ring			
	Double backup ring	RD700174		
VP000178	Single backup ring	RC700178		
	Double backup ring			
VP000180	Single backup ring			
	Double backup ring			
VP000189	Single backup ring	RC700189		
	Double backup ring			
VP000193	Single backup ring	RC700193		
	Double backup ring			
VP000198	Single backup ring			
	Double backup ring	RD700198		
VP000202	Single backup ring	-		
	Double backup ring	-		
VP000204	Single backup ring	RC700204		
	Double backup ring			
VP000216	Single backup ring	RC700216		
	Double backup ring			
VP000249	Single backup ring		RC900249	
	Double backup ring			
VP000250	Single backup ring		RC900250	
	Double backup ring			
VP000263	Single backup ring	RC700263		
	Double backup ring			

SEAL KIT - SPECIAL CAVITIES

ATLANTIC Fluid Tech
WWW.SUMY.IR

CAVITY	BACKUP RING TYPE	NBR 70	NBR 90	VITON 80
VP000307	Single backup ring	-		
	Double backup ring	-		
VP000309	Single backup ring	-		
	Double backup ring	-		
VP000310	Single backup ring	-		
	Double backup ring	-		
VP000311	Single backup ring	-		
	Double backup ring	-		
VP000312	Single backup ring	-		
	Double backup ring	-		
VP000314	Single backup ring	RC700314		
	Double backup ring			
VP000330	Single backup ring	RC700330		
	Double backup ring			
VP000338	Single backup ring			
	Double backup ring	RD700338		
VP000371	Single backup ring	RC700371		
	Double backup ring			
VP000445	Single backup ring	RC700445		
	Double backup ring			

ATLANTIC
Fluid Tech

SECTION 12

Standard Manifolds

SECTION 12

STANDARD MANIFOLDS

ATLANTIC Fluid Tech
WWW.SUMY.IR

Description	Material	Valve type	Max. pressure bar (psi)	Installation	Port size	Page
SAE-XX-2N	Aluminium	Two way	250 (3600)	In line	See datasheet	12.00.**010** - 12.00.**020**
SAE-XX-2N	Steel	Two way	350 (5000)	In line	See datasheet	
SAE-XX-3C	Aluminium	Three way	250 (3600)	In line	See datasheet	12.00.**030**
SAE-XX-3C	Steel	Three way	350 (5000)	In line	See datasheet	12.00.**030**
SAE-XX-3N	Aluminium	Three way	250 (3600)	In line	See datasheet	12.00.**040**
SAE-XX-3N	Steel	Three way	350 (5000)	In line	See datasheet	12.00.**040**
SAE-XX-4N-3P	Aluminium	Four way, three ports	250 (3600)	In line	See datasheet	12.00.**050**
SAE-XX-4N-3P	Steel	Four way, three ports	350 (5000)	In line	See datasheet	12.00.**050**
SAE-XX-4N	Aluminium	Four way	250 (3600)	In line	See datasheet	12.00.**060**
SAE-XX-4N	Steel	Four way	350 (5000)	In line	See datasheet	12.00.**060**
VP000057	Aluminium	Two way	250 (3600)	In line	See datasheet	12.00.**070**
VP000057	Steel	Two way	350 (5000)	In line	See datasheet	12.00.**070**
VP000013	Aluminium	Two way	250 (3600)	In line	See datasheet	12.00.**070**
VP000013	Steel	Two way	350 (5000)	In line	See datasheet	12.00.**070**
VP000180	Aluminium	Two way	250 (3600)	In line	See datasheet	12.00.**070**
VP000180	Steel	Two way	350 (5000)	In line	See datasheet	12.00.**070**
SAE-XX-2N	Aluminium	Two way, with override screw	250 (3600)	In line	See datasheet	12.00.**080**
SAE-XX-2N	Steel	Two way, with override screw	350 (5000)	In line	See datasheet	12.00.**080**

STANDARD MANIFOLDS

SAE-XX-2N

ATLANTIC Fluid Tech
WWW.SUMY.IR

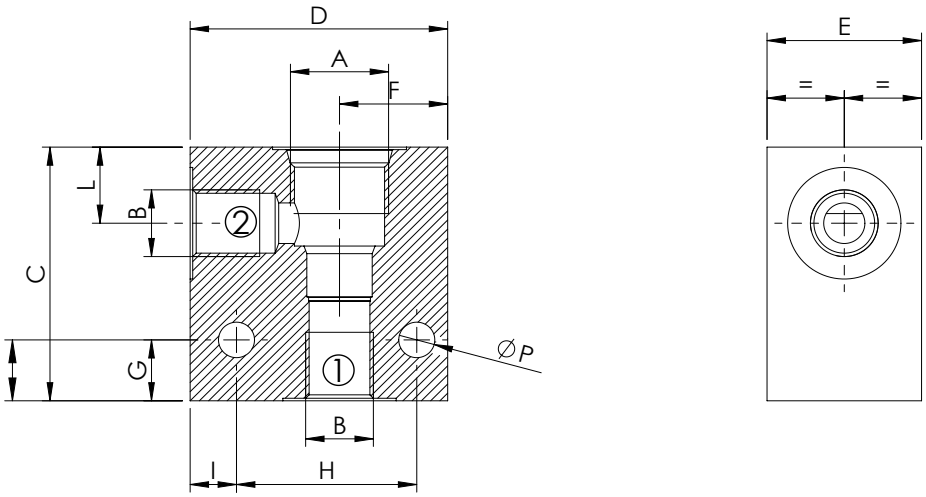

For other configurations/quick codes not available in this catalogue page please consult factory

CAVITY	DIMENSIONS: mm (inches)												QUICK CODE	
A	B	C	D	E	F	G	H	I	L	M	N	P	Steel	Aluminium
SAE-08-2N	G 1/4"	50 (1,96)	50 (1,96)	30 (1,18)	21 (0,83)	12 (0,47)	35 (1,38)	9 (0,35)	15 (0,59)			7 (0,28)	LK000018	LK000017
	G 3/8"	50 (1,96)	50 (1,96)	30 (1,18)	21 (0,83)	12 (0,47)	35 (1,38)	9 (0,35)	15 (0,59)			7 (0,28)	LK000020	LK000019
	G 1/2"	50 (1,96)	50 (1,96)	35 (1,38)	23 (0,91)	12 (0,47)	35 (1,38)	9 (0,35)	16 (0,63)			7 (0,28)	LK000390	LK000247
	7/16-20	50 (1,96)	50 (1,96)	30 (1,18)	21 (0,83)	12 (0,47)	35 (1,38)	9 (0,35)	15 (0,59)			7 (0,28)		
	9/16-18	50 (1,96)	50 (1,96)	30 (1,18)	21 (0,83)	12 (0,47)	35 (1,38)	9 (0,35)	15 (0,59)			7 (0,28)		
SAE-10-2N	G 3/8"	60 (2,36)	60 (2,36)	35 (1,38)	25 (0,98)	15 (0,59)	45 (1,77)	7 (0,28)	19 (0,75)			7 (0,28)	LK000022	LK000021
	G 1/2"	60 (2,36)	60 (2,36)	35 (1,38)	25 (0,98)	15 (0,59)	45 (1,77)	7 (0,28)	19 (0,75)			7 (0,28)	LK000024	LK000023
	G 3/4"	60 (2,36)	60 (2,36)	40 (1,57)	27,5 (1,08)	15 (0,59)	45 (1,77)	9 (0,35)	20 (0,79)			7 (0,28)	LK000047	LK000046
SAE-12-2N	G 1/2"	75 (2,95)	80 (3,15)	40 (1,57)	35 (1,38)	20 (0,79)	60 (2,36)	10 (0,39)	26,5 (1,04)			9 (0,35)	LK000207	LK000208
	G 3/4"	75 (2,95)	80 (3,15)	40 (1,57)	35 (1,38)	20 (0,79)	60 (2,36)	10 (0,39)	26,5 (1,04)			9 (0,35)	LK000205	LK000206
SAE-16-2N	G 3/4"	80 (3,15)	90 (3,54)	50 (1,96)	37 (1,46)	22 (0,87)	60 (2,36)	20 (0,79)	26 (1,02)			9 (0,35)	LK000156	LK000157
	G 1"	80 (3,15)	90 (3,54)	50 (1,96)	37 (1,46)	22 (0,87)	60 (2,36)	20 (0,79)	26 (1,02)			9 (0,35)	LK000154	LK000155
SAE-20-2N														

STANDARD MANIFOLDS

SAE-XX-2N

ATLANTIC Fluid Tech
WWW.SUMY.IR

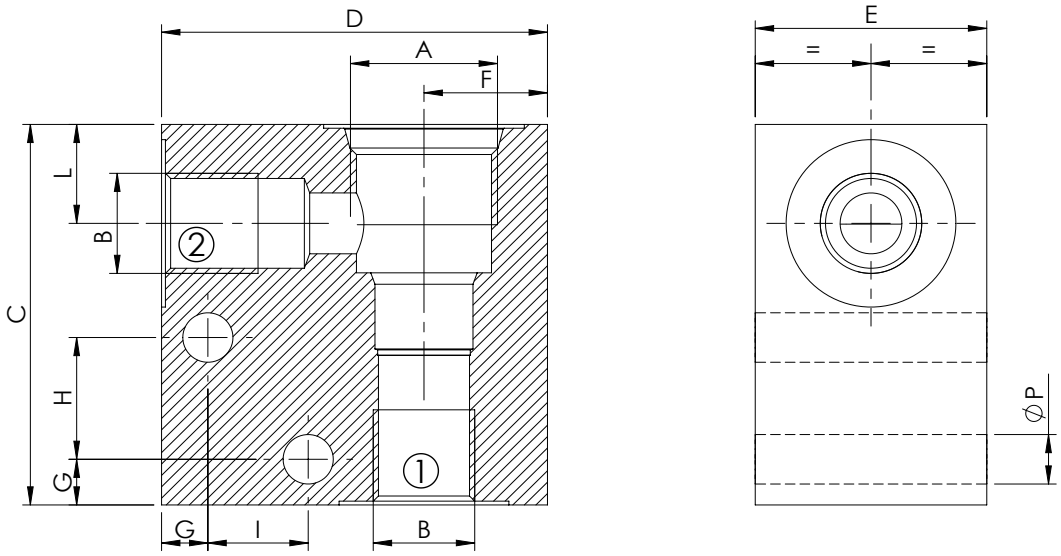

For other configurations/quick codes not available in this catalogue page please consult factory

CAVITY	DIMENSIONS: mm (inches)												QUICK CODE	
A	B	C	D	E	F	G	H	I	L	M	N	P	Steel	Aluminium
SAE-08-2N	G 1/4"	50 (1,96)	50 (1,96)	30 (1,18)	16 (0,63)	6 (0,24)	16 (0,63)	13 (0,51)	13 (0,51)			6,5 (0,26)	LK000086	LK000005
	G 3/8"	50 (1,96)	50 (1,96)	30 (1,18)	16 (0,63)	6 (0,24)	16 (0,63)	13 (0,51)	13 (0,51)			6,5 (0,26)	LK000085	LK000077
	7/16-20	50 (1,96)	50 (1,96)	30 (1,18)	16 (0,63)	6 (0,24)	16 (0,63)	13 (0,51)	13 (0,51)			6,5 (0,26)	LK000277	LK000148
	9/16-18	50 (1,96)	50 (1,96)	30 (1,18)	16 (0,63)	6 (0,24)	16 (0,63)	13 (0,51)	13 (0,51)			6,5 (0,26)	LK000076	LK000278
SAE-10-2N														
SAE-12-2N														
SAE-16-2N														
SAE-20-2N														

STANDARD MANIFOLDS

SAE-XX-3C

ATLANTIC Fluid Tech
WWW.SUMY.IR

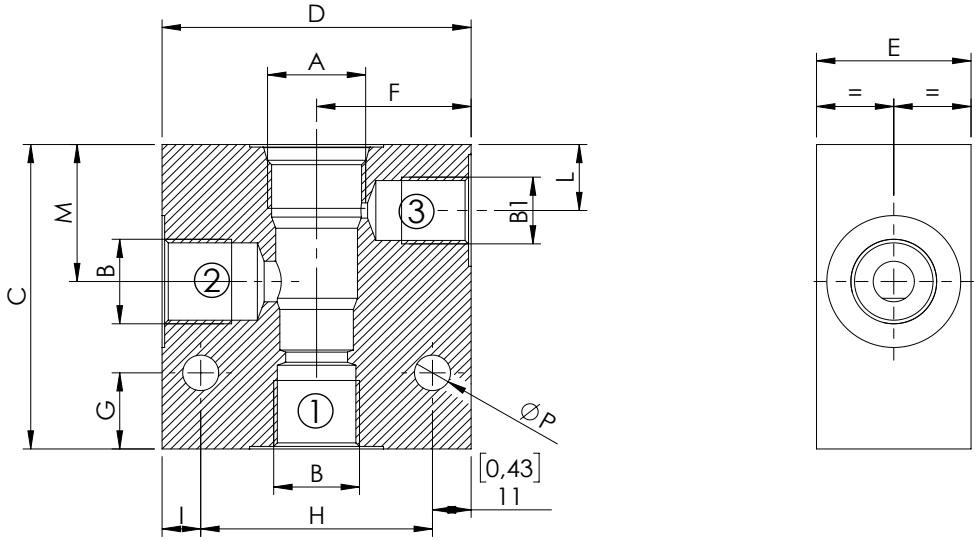

For other configurations/quick codes not available in this catalogue page please consult factory

CAVITY	DIMENSIONS: mm (inches)												QUICK CODE	
A	B	B1	C	D	E	F	G	H	I	L	M	P	Steel	Aluminium
SAE-08-3C	G 3/8"	G 1/4"	60 (2,36)	60 (2,36)	30 (1,18)	30 (1,18)	15 (0,59)	45 (1,77)	7,5 (0,3)	13 (0,51)	27 (1,06)	7 (0,28)	LK000279	LK000033
SAE-10-3C	G 3/8"	G 1/4"	70 (2,76)	60 (2,36)	35 (1,38)	30 (1,18)	15 (0,59)	45 (1,77)	7,5 (0,3)	15 (0,59)	32 (1,26)	7 (0,28)	LK000280	LK000034
SAE-12-3C	G 1/2"	G 1/4"	80 (3,15)	75 (2,95)	40 (1,57)	35 (1,38)	15 (0,59)	55 (2,17)	10 (0,39)	24 (0,94)	42 (1,65)	7 (0,28)	LK000165	LK000164
	G 3/4"	G 1/4"	90 (3,54)	75 (2,95)	40 (1,57)	35 (1,38)	15 (0,59)	55 (2,17)	10 (0,39)	24 (0,94)	42 (1,65)	7 (0,28)	LK000210	LK000211
	7/8-14	9/16-18	80 (3,15)	75 (2,95)	40 (1,57)	35 (1,38)	15 (0,59)	55 (2,17)	10 (0,39)	24 (0,94)	42 (1,65)	9 (0,35)	LK000263	LK000262
SAE-16-3C	G 1"	G 1/4"	90 (3,54)	90 (3,54)	50 (1,96)	40 (1,57)	22 (0,87)	70 (2,76)	10 (0,39)	18,5 (0,73)	39 (1,54)	9 (0,35)	LK000212	LK000213
	G 3/4"	G 1/4"	90 (3,54)	80 (3,15)	50 (1,96)	38 (1,5)	22 (0,87)	60 (2,36)	10 (0,39)	18,5 (0,73)	39 (1,54)	9 (0,35)	LK000264	LK000265
	1 5/16-12	7/16-20	90 (3,54)	90 (3,54)	50 (1,96)	40 (1,57)	22 (0,87)	70 (2,76)	10 (0,39)	18,5 (0,73)	39 (1,54)	9 (0,35)	LK000266	LK000267
SAE-20-3C	G 1"	G 1/4"	110 (4,33)	100 (3,94)	60 (2,36)	45 (1,77)	25 (0,98)	75 (2,95)	12,5 (0,49)	21 (0,83)	51 (2,01)	11 (0,43)	LK000268	LK000269
	G 1-1/4"	G 1/4"	110 (4,33)	100 (3,94)	60 (2,36)	45 (1,77)	25 (0,98)	75 (2,95)	12,5 (0,49)	21 (0,83)	51 (2,01)	11 (0,43)	LK000270	LK000271
	1 5/8-12	7/16-20	110 (4,33)	100 (3,94)	60 (2,36)	45 (1,77)	25 (0,98)	75 (2,95)	12,5 (0,49)	21 (0,83)	51 (2,01)	11 (0,43)	LK000272	LK000273

STANDARD MANIFOLDS

SAE-XX-3N

ATLANTIC Fluid Tech
WWW.SUMY.IR

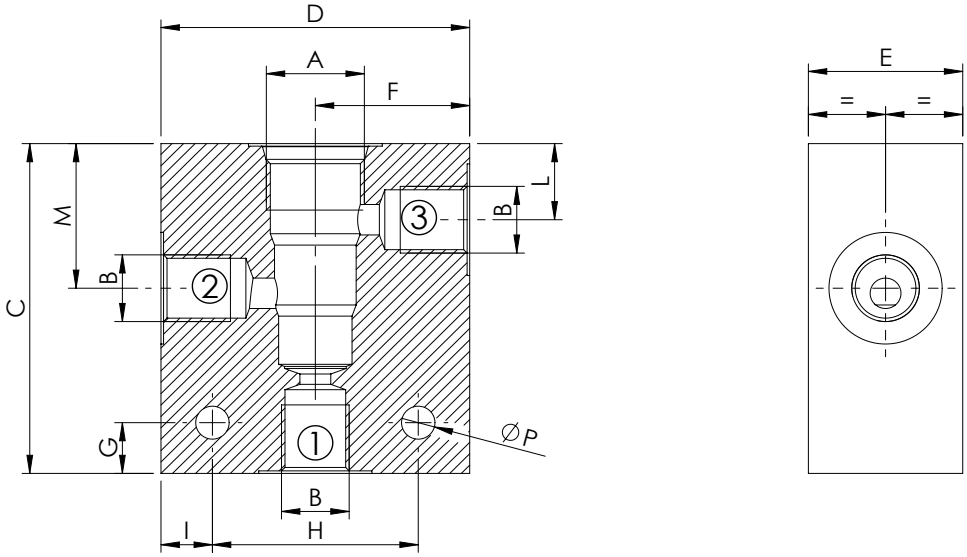

For other configurations/quick codes not available in this catalogue page please consult factory

CAVITY	DIMENSIONS: mm (inches)												QUICK CODE	
A	B	C	D	E	F	G	H	I	L	M	N	P	Steel	Aluminium
SAE-08-3N	G 1/4"	65 (2,56)	60 (2,36)	30 (1,18)	30 (1,18)	10 (0,39)	40 (1,57)	10 (0,39)	15 (0,59)	28,5 (1,12)		6,5 (0,26)	LK000089	LK000008
	G 3/8"	65 (2,56)	60 (2,36)	30 (1,18)	30 (1,18)	10 (0,39)	40 (1,57)	10 (0,39)	15 (0,59)	28,5 (1,12)		6,5 (0,26)	LK000090	LK000009
SAE-10-3N	G 1/4"	65 (2,56)	65 (2,56)	35 (1,38)	32,5 (1,27)	10 (0,39)	50 (1,96)	7,5 (0,29)	18 (0,71)	35 (1,38)		6,5 (0,26)	LK000035	LK000012
	G 3/8"	65 (2,56)	60 (2,36)	35 (1,38)	30 (1,18)	10 (0,39)	45 (1,77)	7,5 (0,29)	18 (0,71)	34,5 (1,35)		7 (0,28)	LK000027	LK000013
	G 1/2"	70 (2,76)	70 (2,76)	35 (1,38)	35 (1,38)	15 (0,59)	50 (1,96)	10 (0,39)	18 (0,71)	34,5 (1,35)		7 (0,28)	LK000131	LK000057
SAE-12-3N	G 1/2"	100 (3,94)	80 (3,15)	40 (1,57)	42,5 (1,67)	15 (0,59)	55 (2,17)	12,5 (0,49)	29 (1,14)	54 (2,13)		7 (0,28)	LK000100	LK000281
	G 3/4"	100 (3,94)	80 (3,15)	40 (1,57)	40 (1,57)	15 (0,59)	55 (2,17)	12,5 (0,49)	29 (1,14)	54 (2,13)		7 (0,28)	LK000294	LK000295
SAE-16-3N	G 3/4"	100 (3,94)	90 (3,54)	50 (1,96)	45 (1,77)	20 (0,79)	60 (2,36)	15 (0,59)	26 (1,02)	54,5 (2,15)		10,5 (0,41)	LK000256	LK000257
SAE-20-3N														

STANDARD MANIFOLDS

SAE-XX-4N 3P

THREE PORTS

ATLANTIC Fluid Tech
WWW.SUMY.IR

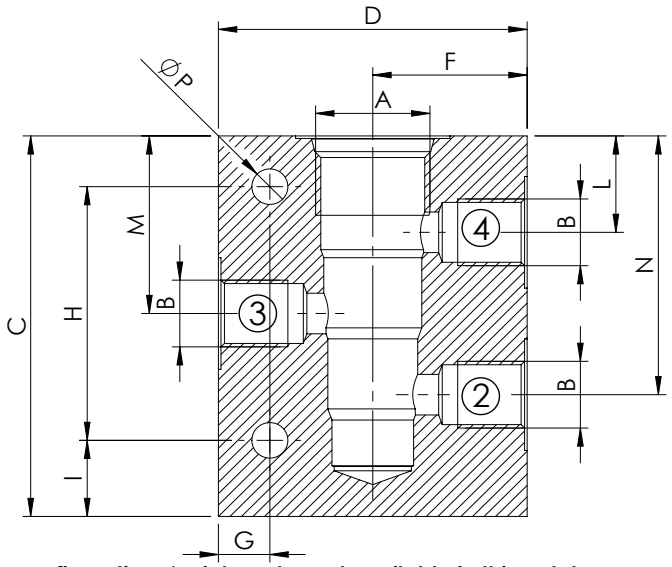

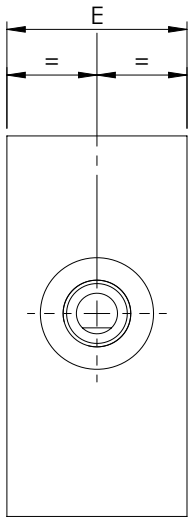

For other configurations/quick codes not available in this catalogue page please consult factory

CAVITY	DIMENSIONS: mm (inches)												QUICK CODE	
A	B	C	D	E	F	G	H	I	L	M	N	P	Steel	Aluminium
SAE-08-4N	G 3/8"	75 (2,95)	60 (2,36)	35 (1,38)	30 (1,18)	10 (0,39)	50 (1,96)	15 (0,59)	15 (0,59)	29 (1,14)	43 (1,69)	7 (0,28)	LK000063	LK000376
SAE-10-4N	G 1/4"	75 (2,95)	60 (2,36)	35 (1,38)	30 (1,18)	10 (0,39)	50 (1,96)	15 (0,59)	19 (0,75)	35 (1,38)	51 (2,01)	7 (0,28)	LK000040	LK000038
	G 3/8"	75 (2,95)	60 (2,36)	35 (1,38)	30 (1,18)	10 (0,39)	50 (1,96)	15 (0,59)	19 (0,75)	35 (1,38)	51 (2,01)	7 (0,28)	LK000016	LK000037
	G 1/2"	85 (3,35)	65 (2,56)	35 (1,38)	32,5	10 (0,39)	50 (1,96)	15 (0,59)	19 (0,75)	35 (1,38)	51 (2,01)	7 (0,28)	LK000041	LK000039
	9/16-18	75 (2,95)	60 (2,36)	35 (1,38)	30 (1,18)	10 (0,39)	50 (1,96)	15 (0,59)	19 (0,75)	35 (1,38)	51 (2,01)	7 (0,28)	LK000331	LK000330
	1/4 JIS	75 (2,95)	60 (2,36)	35 (1,38)	30 (1,18)	10 (0,39)	50 (1,96)	15 (0,59)	19 (0,75)	35 (1,38)	51 (2,01)	7 (0,28)	LK000249	LK000367
SAE-12-4N	G 3/4"	120 (4,72)	80 (3,15)	40 (1,57)	40 (1,57)	12 (0,47)	90 (3,54)	15 (0,59)	28,5 (1,12)	53,5 (2,11)	78,5 (3,09)	7 (0,28)	LK000416	LK000417
SAE-16-4N	G 3/4"	120 (4,72)	90 (3,54)	50 (1,96)	45 (1,77)	12 (0,47)	90 (3,54)	15 (0,59)	25,5 (1)	54 (2,13)	82,5 (3,25)	8,5 (0,33)	LK000222	LK000225
	1 1/16 JIS	120 (4,72)	90 (3,54)	50 (1,96)	45 (1,77)	12 (0,47)	90 (3,54)	15 (0,59)	25,5 (1)	54 (2,13)	82,5 (3,25)	8,5 (0,33)	LK000223	LK000224
SAE-20-4N														

STANDARD MANIFOLDS

SAE-XX-4N

ATLANTIC Fluid Tech
WWW.SUMY.IR

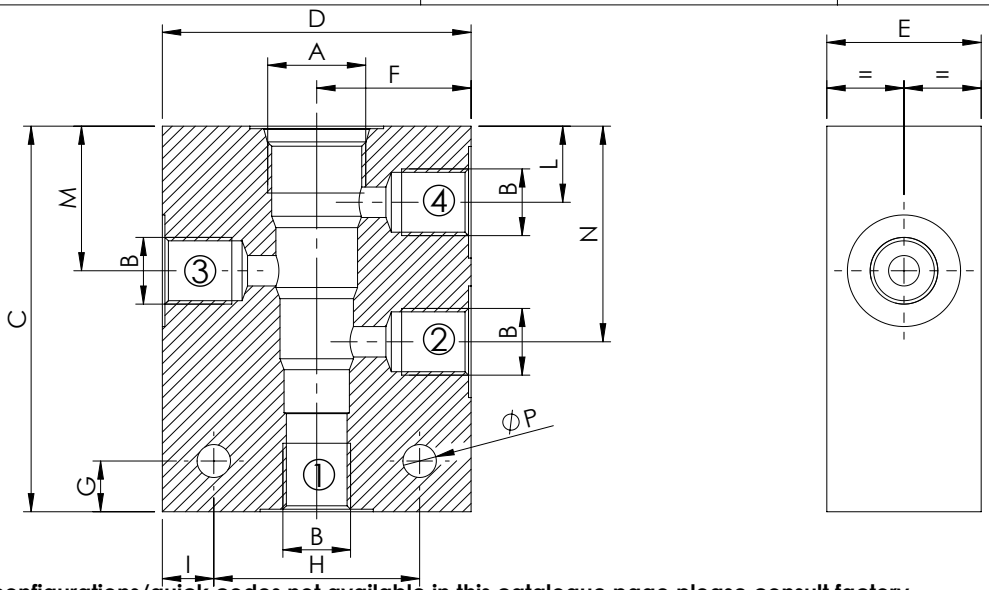

For other configurations/quick codes not available in this catalogue page please consult factory

CAVITY	DIMENSIONS: mm (inches)												QUICK CODE	
A	B	C	D	E	F	G	H	I	L	M	N	P	Steel	Aluminium
SAE-08-4N	G 1/4"	76 (2,99)	60 (2,36)	30 (1,18)	30 (1,18)	10 (0,39)	40 (1,57)	10 (0,39)	15 (0,59)	28,5 (1,12)	42,5 (1,67)	6,5 (0,26)	LK000282	LK000015
	G 3/8"	76 (2,99)	60 (2,36)	30 (1,18)	30 (1,18)	10 (0,39)	40 (1,57)	10 (0,39)	15 (0,59)	28,5 (1,12)	42,5 (1,67)	6,5 (0,26)	LK000276	LK000014
SAE-10-4N	G 1/4"	80 (3,15)	65 (2,56)	35 (1,38)	32,5 (1,28)	10 (0,39)	50 (1,97)	7,5 (0,3)	18 (0,71)	35 (1,38)	50 (1,96)	6,5 (0,26)	LK000231	LK000010
	G 3/8"	80 (3,15)	65 (2,56)	35 (1,38)	32,5 (1,28)	10 (0,39)	50 (1,97)	7,5 (0,3)	18 (0,71)	35 (1,38)	50 (1,96)	6,5 (0,26)	LK000043	LK000011
SAE-12-4N	G 3/4"	125 (4,92)	80 (3,15)	40 (1,57)	40 (1,57)	20 (0,79)	55 (2,17)	12,5 (0,49)	28,5 (1,12)	53,5 (2,11)	79,5 (3,13)	7 (0,28)	LK000418	LK000419
SAE-16-4N														
SAE-20-4N														

STANDARD MANIFOLDS

VP000XXX

ATLANTIC Fluid Tech
WWW.SUMY.IR

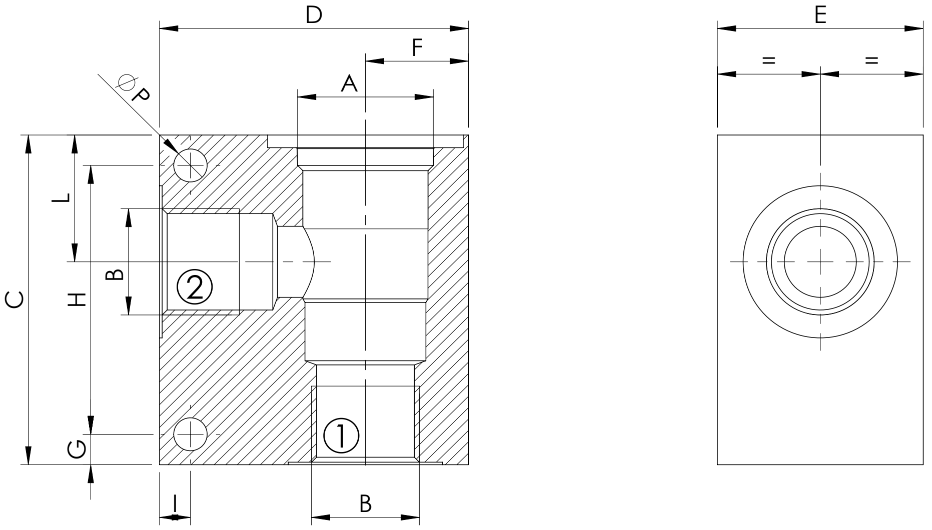

For other configurations/quick codes not available in this catalogue page please consult factory

CAVITY	DIMENSIONS: mm (inches)												QUICK CODE	
A	B	C	D	E	F	G	H	I	L	M	N	P	Steel	Aluminium
VP000057	G 1/2"	65 (2,56)	60 (2,36)	40 (1,57)	20 (0,79)	6 (0,24)	53 (2,09)	6 (0,24)	25 (0,98)			6,5 (0,26)	LK000071	LK000055
VP000057	G 3/4"	65 (2,56)	60 (2,36)	40 (1,57)	20 (0,79)	6 (0,24)	53 (2,09)	6 (0,24)	25 (0,98)			6,5 (0,26)	LK000075	LK000065
VP000057	3/4-16	65 (2,56)	60 (2,36)	40 (1,57)	20 (0,79)	6 (0,24)	53 (2,09)	6 (0,24)	25 (0,98)			6,5 (0,26)	LK000275	LK000283
VP000057	7/8-14	65 (2,56)	60 (2,36)	40 (1,57)	20 (0,79)	6 (0,24)	53 (2,09)	6 (0,24)	25 (0,98)			6,5 (0,26)	LK000363	LK000366
VP000057	M22x1,5	65 (2,56)	60 (2,36)	40 (1,57)	20 (0,79)	6 (0,24)	53 (2,09)	6 (0,24)	25 (0,98)			6,5 (0,26)	LK000393	LK000392
VP000013	G 3/4"	80 (3,15)	80 (3,15)	50 (1,97)	26 (1,02)	7,5 (0,3)	65 (2,56)	7,5 (0,3)	31 (1,22)			8,5 (0,33)	LK000078	LK000066
VP000013	G 1"	80 (3,15)	80 (3,15)	50 (1,97)	26 (1,02)	7,5 (0,3)	65 (2,56)	7,5 (0,3)	31 (1,22)			8,5 (0,33)	LK000061	LK000042
VP000180	G 1-1/4"	100 (3,94)	90 (3,54)	70 (2,76)	35 (1,38)	17 (0,67)	75 (2,95)	15 (0,59)	39 (1,54)			8,5 (0,33)	LK000087	LK000094

STANDARD MANIFOLDS

SAE-XX-2N

WITH OVERRIDE SCREW

ATLANTIC Fluid Tech
WWW.SUMY.IR

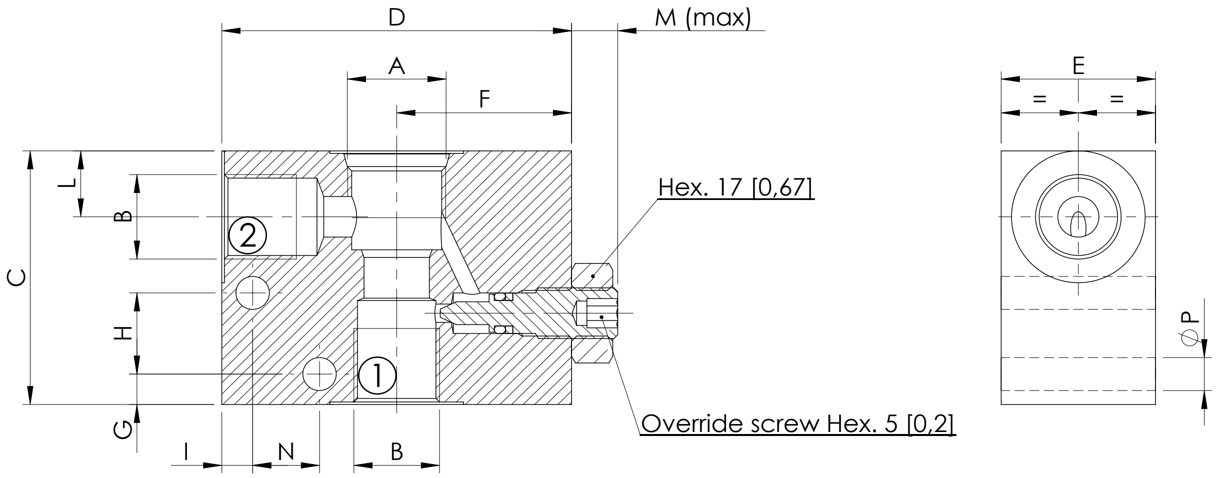

For other configurations/quick codes not available in this catalogue page please consult factory

CAVITY	DIMENSIONS: mm (inches)												QUICK CODE	
A	B	C	D	E	F	G	H	I	L	M	N	P	Steel	Aluminium
SAE-08-2N	G 1/4"	50 (1,96)	68 (2,68)	30 (1,18)	34 (1,34)	6 (0,24)	16 (0,63)	6 (0,24)	13 (0,51)	9 (0,35)	13 (0,51)	6,5 (0,26)	KS000009	KS000003
	G 3/8"	50 (1,96)	68 (2,68)	30 (1,18)	34 (1,34)	6 (0,24)	16 (0,63)	6 (0,24)	13 (0,51)	9 (0,35)	13 (0,51)	6,5 (0,26)	KS000008	KS000002

ATLANTIC
Fluid Tech

SECTION 13

Cavities and Technical Drawings

CAVITIES AND TECHNICAL DRAWINGS

ATLANTIC
Fluid Tech
WWW.SUMY.IR

SAE-XX-2N

ATLANTIC Fluid Tech
WWW.SUMY.IR

Dimensions: mm [inches]

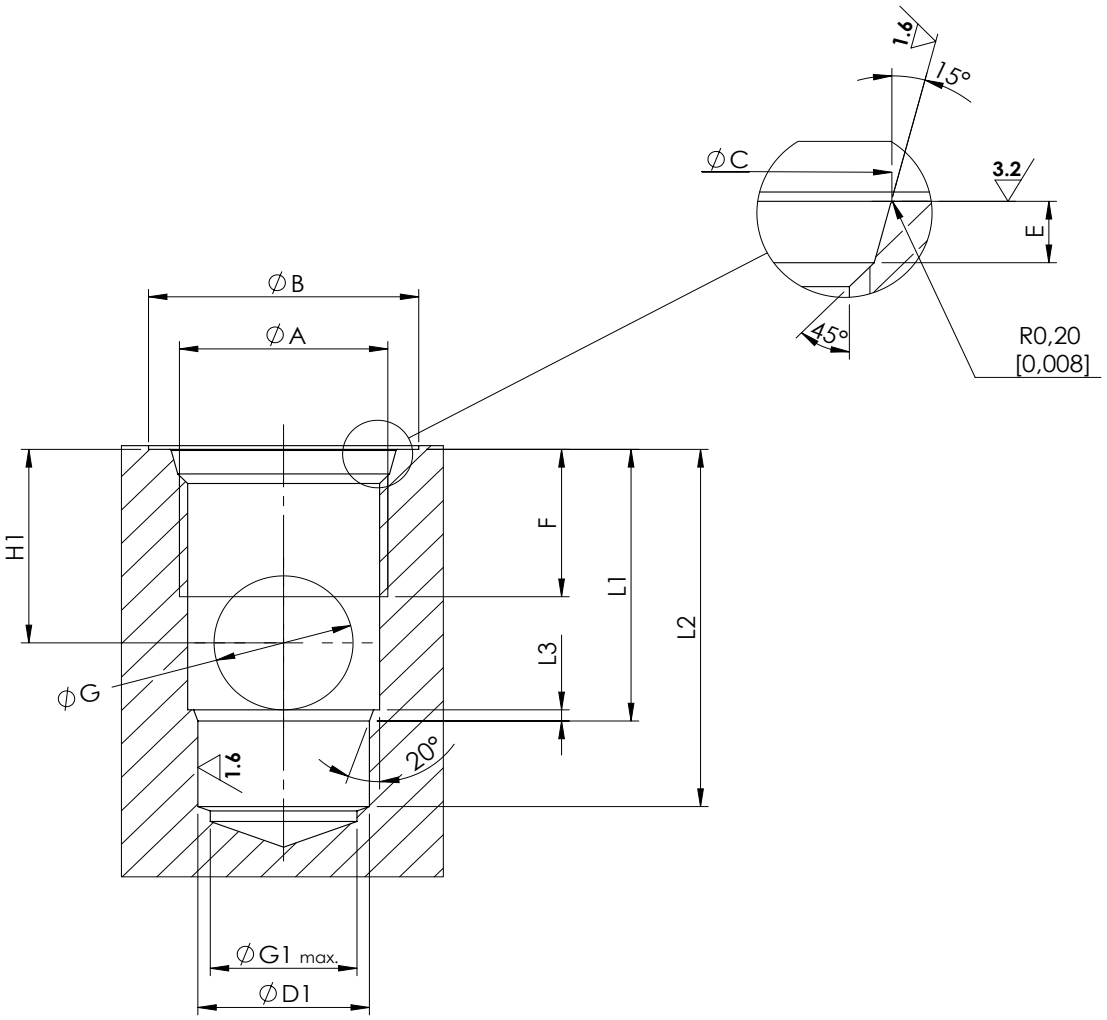

General tolerances : 0.3 mm [0,012 inches]

◎	0.03[0.0012]
⊥	0.02[0,0008]

	SAE-08-2N	SAE-10-2N	SAE-12-2N	SAE-16-2N	SAE-20-2N
A	3/4-16 UNF	7/8-14 UNF	1-1/16 12 UNF	1-5-16 12 UNF	1-5/8 12 UNF
B	26 [1,02]	30 [1,18]	35 [1,38]	42 [1,65]	48 [1,89]
C	$20.6^{+0,1}_{0}$ [$0,811^{+0,004}_{0}$]	$23.9^{+0,1}_{0}$ [$0,941^{+0,004}_{0}$]	$29.2^{+0,1}_{0}$ [$1,15^{+0,004}_{0}$]	$35.5^{+0,1}_{0}$ [$1,398^{+0,004}_{0}$]	$43.5^{+0,1}_{0}$ [$1,713^{+0,004}_{0}$]
D1	$12.7^{+0,05}_{0}$ [$0,5^{+0,002}_{0}$]	$15.87^{+0,05}_{0}$ [$0,625^{+0,002}_{0}$]	$22.22^{+0,05}_{0}$ [$0,875^{+0,002}_{0}$]	$28.60^{+0,05}_{0}$ [$1,126^{+0,002}_{0}$]	$36.52^{+0,05}_{0}$ [$1,438^{+0,002}_{0}$]
E	$2.6^{+0,3}_{0}$ [$0,102^{+0,012}_{0}$]	$2.6^{+0,3}_{0}$ [$0,102^{+0,012}_{0}$]	$3.3^{+0,3}_{0}$ [$0,130^{+0,012}_{0}$]	$3.3^{+0,3}_{0}$ [$0,130^{+0,012}_{0}$]	$3.4^{+0,3}_{0}$ [$0,134^{+0,012}_{0}$]
F	13 [0,512]	15 [0,591]	20 [0,787]	20 [0,787]	22 [0,866]
G	9 [0,354]	12 [0,472]	18 [0,709]	19 [0,748]	25 [0,984]
G1	12 [0,472]	15 [0,591]	19 [0,748]	24 [0,945]	30 [1,18]
H1	14 [0,551]	18 [0,709]	26 [1,024]	25 [0,984]	30 [1,180]
L1	20.5 [0,807]	25.5 [1,004]	36.5 [1,437]	36 [1,417]	44.5 [1,752]
L2	29 [1,142]	34.5 [1,358]	48 [1,890]	49 [1,929]	59 [2,323]
L3	1,5 [0,06]	1,5 [0,06]	1,5 [0,06]	1,5 [0,06]	1,5 [0,06]

SAE-XX-3C

ATLANTIC Fluid Tech
WWW.SUMY.IR

Dimensions: mm [inches]

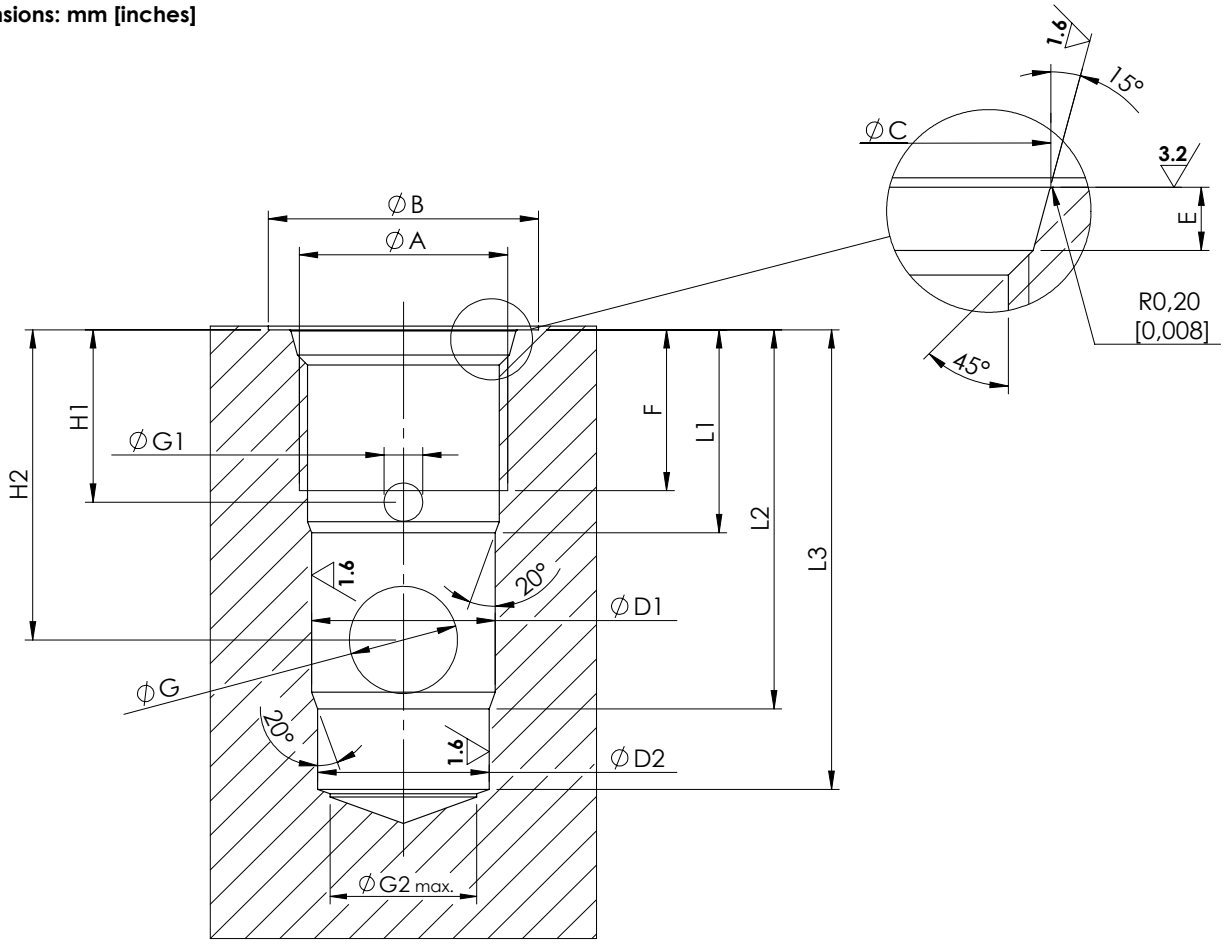

General tolerances : 0.3 mm [0,012 inches]

◎	0.03[0.0012]
⊥	0.02[0,0008]

	SAE-08-3C	SAE-10-3C	SAE-12-3C	SAE-16-3C	SAE-20-3C
A	3/4-16 UNF	7/8-14 UNF	1-1/16 12 UNF	1-5/16 12 UNF	1-5/8 12 UNF
B	26 [1,024]	30 [1,18]	35 [1,38]	42 [1,65]	48 [1,89]
C	$20.6^{+0.1}_{0}$ [$0{,}811^{+0{,}004}_{0}$]	$23.9^{+0{,}1}_{0}$ [$0{,}941^{+0{,}004}_{0}$]	$29.2^{+0{,}1}_{0}$ [$1{,}15^{+0{,}004}_{0}$]	$35.5^{+0{,}1}_{0}$ [$1{,}398^{+0{,}004}_{0}$]	$43.5^{+0{,}1}_{0}$ [$1{,}713^{+0{,}004}_{0}$]
D1	$15.87^{+0{,}05}_{0}$ [$0{,}625^{+0{,}002}_{0}$]	$19.05^{+0{,}05}_{0}$ [$0{,}750^{+0{,}002}_{0}$]	$23.80^{+0{,}05}_{0}$ [$0{,}937^{+0{,}002}_{0}$]	$28.60^{+0{,}05}_{0}$ [$1{,}126^{+0{,}002}_{0}$]	$36.52^{+0{,}05}_{0}$ [$1{,}438^{+0{,}002}_{0}$]
D2	$14.27^{+0{,}05}_{0}$ [$0{,}562^{+0{,}002}_{0}$]	$17.47^{+0{,}05}_{0}$ [$0{,}688^{+0{,}002}_{0}$]	$22.22^{+0{,}05}_{0}$ [$0{,}875^{+0{,}002}_{0}$]	$25.42^{+0{,}05}_{0}$ [$1^{+0{,}002}_{0}$]	$33.35^{+0{,}05}_{0}$ [$1{,}313^{+0{,}002}_{0}$]
E	$2.6^{+0{,}3}_{0}$ [$0{,}102^{+0{,}012}_{0}$]	$2.6^{+0{,}3}_{0}$ [$0{,}102^{+0{,}012}_{0}$]	$3.3^{+0{,}3}_{0}$ [$0{,}130^{+0{,}012}_{0}$]	$3.3^{+0{,}3}_{0}$ [$0{,}130^{+0{,}012}_{0}$]	$3.4^{+0{,}3}_{0}$ [$0{,}134^{+0{,}012}_{0}$]
F	12 [0,472]	13 [0,512]	21 [0,827]	16.5 [0,650]	20 [0,787]
G	8 [0,315]	14 [0,551]	14 [0,551]	15 [0,591]	28 [1,102]
G1	3 [0,118]	4 [0,158]	5 [0,197]	5 [0,197]	7 [0,276]
G2	12 [0,475]	15 [0,591]	19 [0,748]	24 [0,945]	30 [1,181]
H1	12.5 [0,492]	14 [0,551]	22.5 [0,889]	17.5 [0,689]	20 [0,787]
H2	26.5 [0,807]	31.5 [1,240]	40.5 [1,595]	38 [1,496]	50 [1,969]
L1	16 [0,630]	18 [0,709]	26.5 [1,043]	22 [0,866]	25.5 [1,004]
L2	32 [1,260]	40 [1,575]	49.5 [1,949]	47.5 [1,870]	65.5 [2,579]
L3	40 [1,575]	49 [1,929]	60 [2,363]	58 [2,284]	78 [3,071]

SAE-XX-3N

ATLANTIC Fluid Tech
WWW.SUMY.IR

Dimensions: mm [inches]

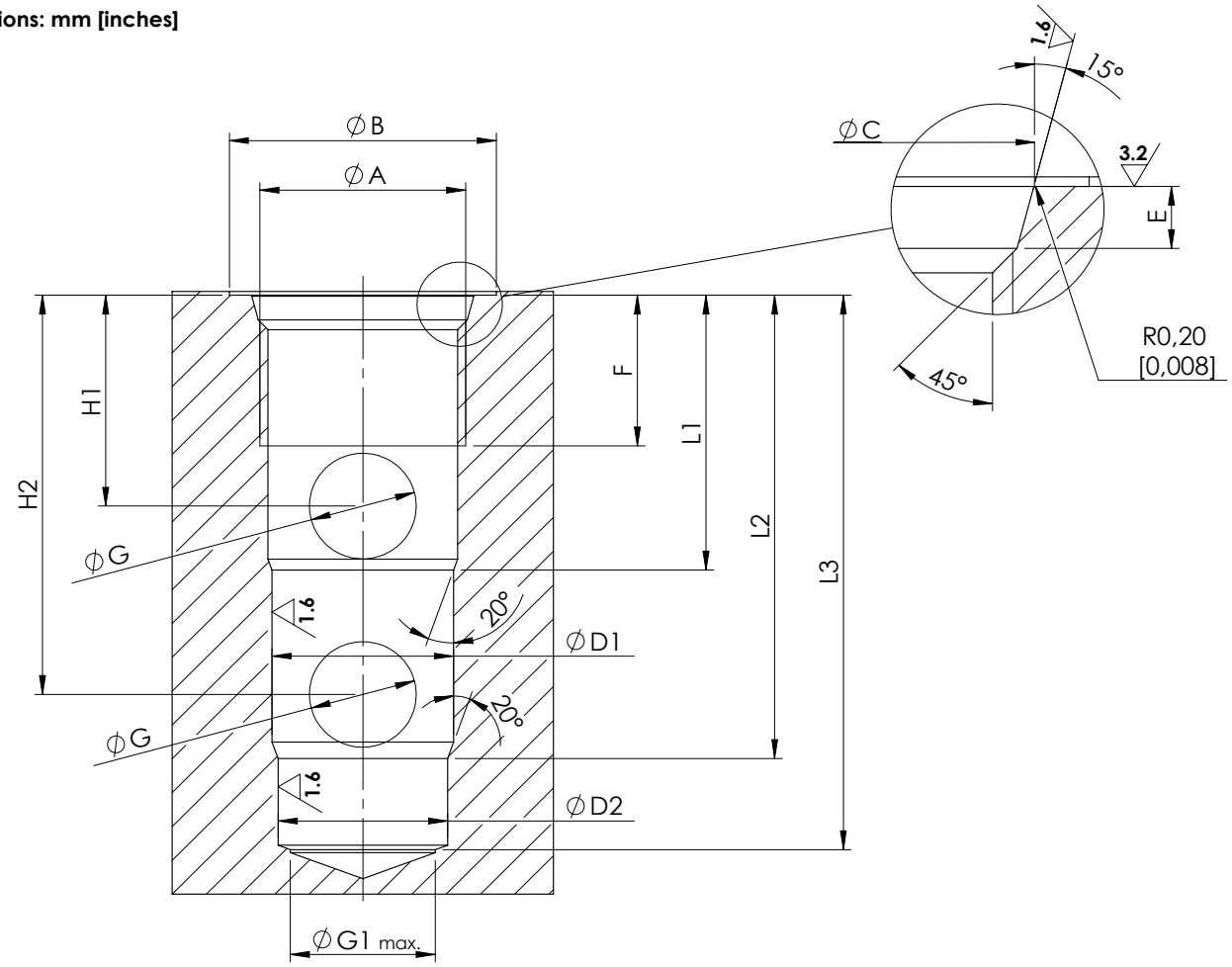

General tolerances : 0.3 mm [0,012 inches]

◎	0.03[0.0012]
⊥	0.02[0,0008]

	SAE-08-3N	SAE-10-3N	SAE-12-3N	SAE-16-3N	SAE-20-3N
A	3/4-16 UNF	7/8-14 UNF	1-1/16 12 UNF	1-5/16 12 UNF	1-5/8 12 UNF
B	26 [1,02]	30 [1,18]	35 [1,38]	42 [1,65]	48 [1,89]
C	$20.6^{+0,1}_{0}$ [$0,811^{+0,004}_{0}$]	$23.9^{+0,1}_{0}$ [$0,941^{+0,004}_{0}$]	$29.2^{+0,1}_{0}$ [$1,15^{+0,004}_{0}$]	$35.5^{+0,1}_{0}$ [$1,398^{+0,004}_{0}$]	$43.5^{+0,1}_{0}$ [$1,713^{+0,004}_{0}$]
D1	$15.87^{+0,05}_{0}$ [$0,625^{+0,002}_{0}$]	$17.47^{+0,05}_{0}$ [$0,688^{+0,002}_{0}$]	$23.80^{+0,05}_{0}$ [$0,937^{+0,002}_{0}$]	$28.60^{+0,05}_{0}$ [$1,126^{+0,002}_{0}$]	$36.52^{+0,05}_{0}$ [$1,438^{+0,002}_{0}$]
D2	$14.27^{+0,05}_{0}$ [$0,562^{+0,002}_{0}$]	$15.87^{+0,05}_{0}$ [$0,625^{+0,002}_{0}$]	$22.22^{+0,05}_{0}$ [$0,875^{+0,002}_{0}$]	$27.00^{+0,05}_{0}$ [$1,063^{+0,002}_{0}$]	$33.35^{+0,05}_{0}$ [$1,313^{+0,002}_{0}$]
E	$2.6^{+0,3}_{0}$ [$0,102^{+0,012}_{0}$]	$2.6^{+0,3}_{0}$ [$0,102^{+0,012}_{0}$]	$3.3^{+0,3}_{0}$ [$0,130^{+0,012}_{0}$]	$3.3^{+0,3}_{0}$ [$0,130^{+0,012}_{0}$]	$3.4^{+0,3}_{0}$ [$0,134^{+0,012}_{0}$]
F	13 [0,512]	14 [0,551]	20 [0,787]	20 [0,787]	22 [0,866]
G	6 [0,236]	8 [0,315]	14 [0,551]	17 [0,669]	25 [0,984]
G1	12 [0,472]	15 [0,591]	19 [0,748]	24 [0,945]	30 [1,181]
-	-	-	-	-	-
H1	15 [0,591]	18 [0,709]	28 [1,102]	25.5 [1,004]	32 [1,260]
H2	29 [1,142]	34 [1,339]	53 [2,087]	54 [2,126]	72 [2,835]
L1	19.50 [0,768]	23.5 [0,925]	36.5 [1,437]	35.5 [1,398]	46 [1,811]
L2	33.50 [1,319]	39.50 [1,555]	61.50 [2,421]	64 [2,520]	86 [3,386]
L3	43 [1,693]	48.50 [1,910]	73 [2,874]	75 [2,953]	100 [3,937]

SAE-XX-4N

ATLANTIC Fluid Tech
WWW.SUMY.IR

Dimensions: mm [inches]

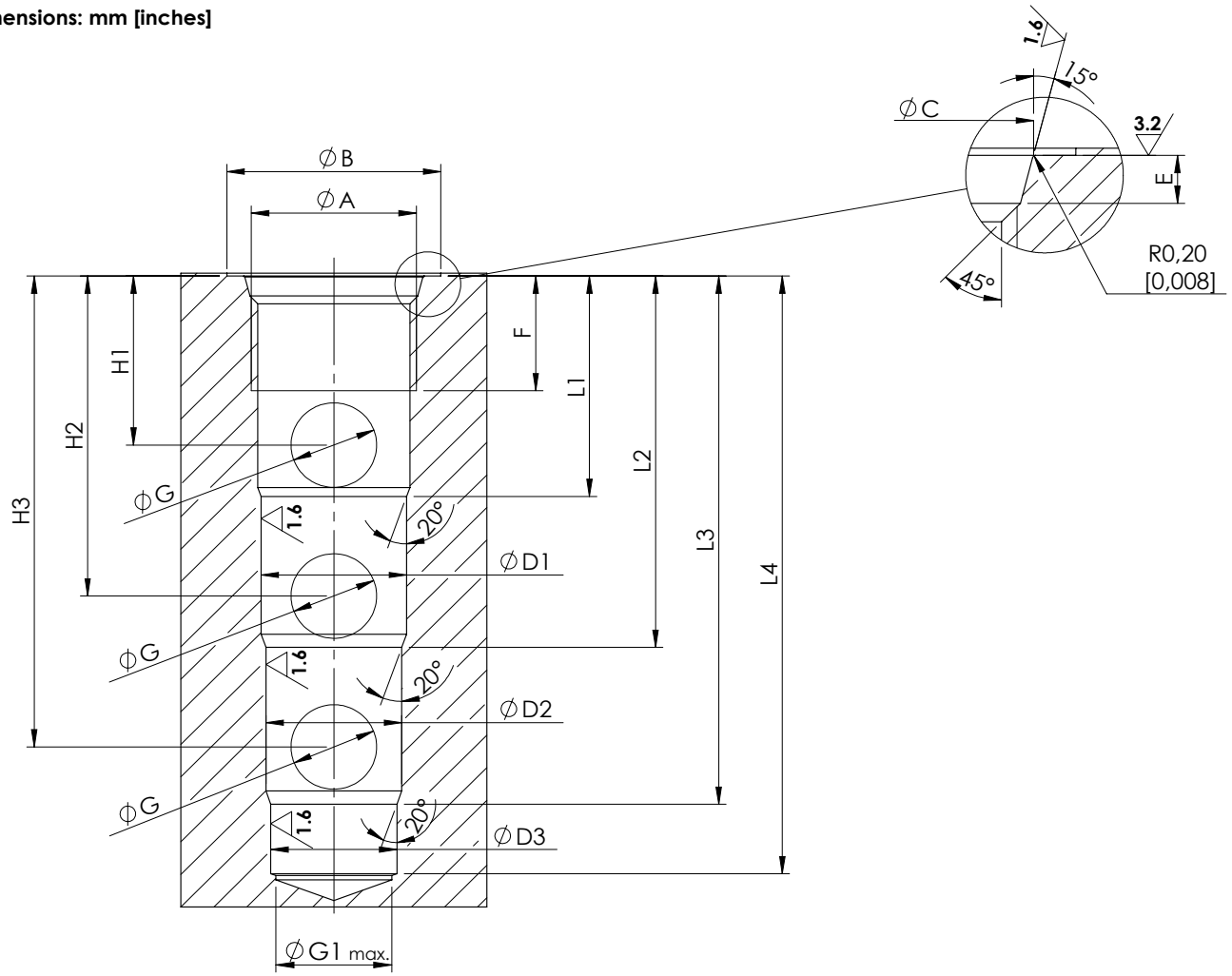

General tolerances : 0.3 mm [0,012 inches]

◎	0.03[0.0012]
⊥	0.02[0,0008]

	SAE-08-4N	SAE-10-4N	SAE-12-4N	SAE-16-4N	SAE-20-4N
A	3/4-16 UNF	7/8-14 UNF	1-1/16 12 UNF	1-5/16 12 UNF	1-5/8 12 UNF
B	26 [1,02]	30 [1,18]	35 [1,38]	42 [1,65]	48 [1,89]
C	$20.6^{+0,1}_{0}$ [$0,811^{+0,004}_{0}$]	$23.9^{+0,1}_{0}$ [$0,941^{+0,004}_{0}$]	$29.2^{+0,1}_{0}$ [$1,15^{+0,004}_{0}$]	$35.5^{+0,1}_{0}$ [$1,398^{+0,004}_{0}$]	$43.5^{+0,1}_{0}$ [$1,713^{+0,004}_{0}$]
D1	$15.87^{+0,05}_{0}$ [$0,625^{+0,002}_{0}$]	$19.05^{+0,05}_{0}$ [$0,750^{+0,002}_{0}$]	$23.80^{+0,05}_{0}$ [$0,937^{+0,002}_{0}$]	$28.60^{+0,05}_{0}$ [$1,126^{+0,002}_{0}$]	$36.52^{+0,05}_{0}$ [$1,438^{+0,002}_{0}$]
D2	$14.27^{+0,05}_{0}$ [$0,562^{+0,002}_{0}$]	$17.47^{+0,05}_{0}$ [$0,688^{+0,002}_{0}$]	$22.22^{+0,05}_{0}$ [$0,875^{+0,002}_{0}$]	$27.00^{+0,05}_{0}$ [$1,063^{+0,002}_{0}$]	$33.35^{+0,05}_{0}$ [$1,313^{+0,002}_{0}$]
D3	$12.7^{+0,05}_{0}$ [$0,500^{+0,002}_{0}$]	$15.87^{+0,05}_{0}$ [$0,625^{+0,002}_{0}$]	$20.62^{+0,05}_{0}$ [$0,812^{+0,002}_{0}$]	$25.42^{+0,05}_{0}$ [$1^{+0,002}_{0}$]	$31.75^{+0,05}_{0}$ [$1,250^{+0,002}_{0}$]
E	$2.6^{+0,3}_{0}$ [$0,102^{+0,012}_{0}$]	$2.6^{+0,3}_{0}$ [$0,102^{+0,012}_{0}$]	$3.3^{+0,3}_{0}$ [$0,130^{+0,012}_{0}$]	$3.3^{+0,3}_{0}$ [$0,130^{+0,012}_{0}$]	$3.4^{+0,3}_{0}$ [$0,134^{+0,012}_{0}$]
F	13 [0,512]	15 [0,591]	19 [0,748]	20 [0,787]	22 [0,866]
G	6 [0,236]	8 [0,315]	14 [0,551]	16 [0,630]	25 [0,984]
G1	12 [0,472]	15 [0,591]	19 [0,748]	24 [0,945]	30 [1,181]
H1	15 [0,591]	18 [0,709]	28 [1,102]	25 [0,984]	32 [1,260]
H2	29 [1,142]	34 [1,339]	53 [2,087]	53.5 [2,106]	72 [2,835]
H3	43 [1,693]	50 [1,969]	78 [3,071]	82 [3,228]	114 [4,488]
L1	19.50 [0,768]	23.5 [0,925]	36.5 [1,437]	35.5 [1,398]	46 [1,811]
L2	33.50 [1,319]	39.50 [1,555]	61.50 [2,421]	64 [2,520]	87 [3,425]
L3	47.5 [1,870]	55.5 [2,185]	87.5 [3,445]	92.5 [3,642]	128.5 [5,059]
L4	56 [2,205]	64.5 [2,539]	99 [3,898]	104 [4,095]	142 [5,591]

SAE-XX-5N

ATLANTIC Fluid Tech
WWW.SUMY.IR

Dimensions: mm [inches]

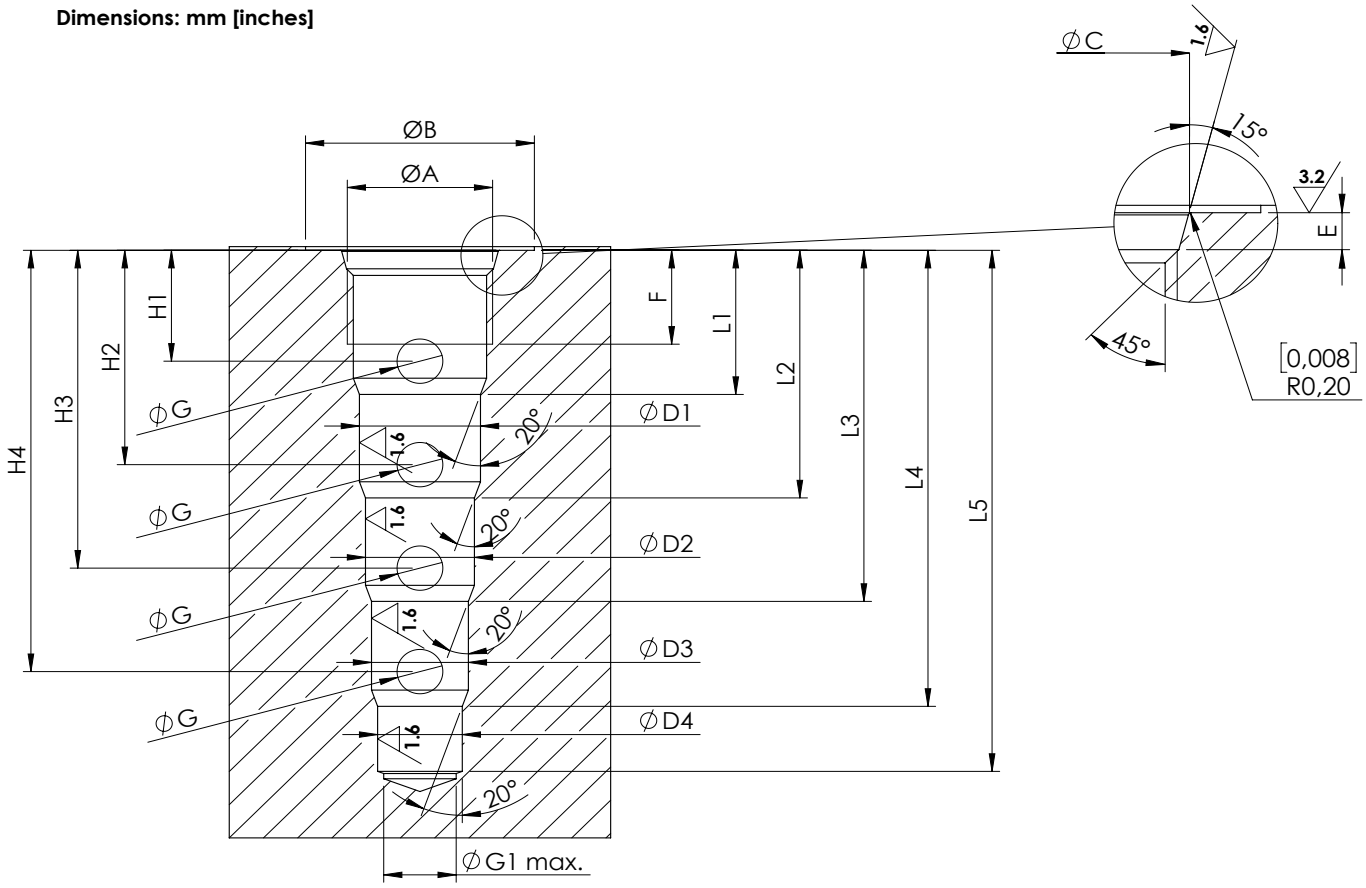

General tolerances : 0.3 mm [0,012 inches]

◎	0.03[0.0012]
⊥	0.02[0,0008]

	SAE-08-5N	SAE-10-5N	SAE-12-5N	SAE-16-5N
A	3/4-16 UNF	7/8-14 UNF	1-1/16 12 UN	1-5/16 12 UN
B	30 [1,181]	30 [1,181]	35 [1,378]	42 [1,653]
C	$20.6^{+0,1}_{0}$ [$0,811^{+0,004}_{0}$]	$23.9^{+0,1}_{0}$ [$0,941^{+0,004}_{0}$]	$29.2^{+0,1}_{0}$ [$1,15^{+0,004}_{0}$]	$35.5^{+0,1}_{0}$ [$1,398^{+0,004}_{0}$]
D1	$15.87^{+0,05}_{0}$ [$0,625^{+0,002}_{0}$]	$19.05^{+0,05}_{0}$ [$0,750^{+0,002}_{0}$]	$23.80^{+0,05}_{0}$ [$0,937^{+0,002}_{0}$]	$28.60^{+0,05}_{0}$ [$1,126^{+0,002}_{0}$]
D2	$14.27^{+0,05}_{0}$ [$0,562^{+0,002}_{0}$]	$17.47^{+0,05}_{0}$ [$0,688^{+0,002}_{0}$]	$22.22^{+0,05}_{0}$ [$0,875^{+0,002}_{0}$]	$27.00^{+0,05}_{0}$ [$1,063^{+0,002}_{0}$]
D3	$12.70^{+0,05}_{0}$ [$0,500^{+0,002}_{0}$]	$15.87^{+0,05}_{0}$ [$0,625^{+0,002}_{0}$]	$20.62^{+0,05}_{0}$ [$0,812^{+0,002}_{0}$]	$25.42^{+0,05}_{0}$ [$1^{+0,002}_{0}$]
D4	$11.10^{+0,05}_{0}$ [$0,437^{+0,002}_{0}$]	$14.27^{+0,05}_{0}$ [$0,562^{+0,002}_{0}$]	$19.05^{+0,05}_{0}$ [$0,750^{+0,002}_{0}$]	$23.80^{+0,05}_{0}$ [$0,937^{+0,002}_{0}$]
E	$2.6^{+0,3}_{0}$ [$0,102^{+0,012}_{0}$]	$2.6^{+0,3}_{0}$ [$0,102^{+0,012}_{0}$]	$3.3^{+0,3}_{0}$ [$0,130^{+0,012}_{0}$]	$3.3^{+0,3}_{0}$ [$0,130^{+0,012}_{0}$]
F	13 [0,512]	15 [0,591]	19 [0,748]	20 [0,787]
G	6 [0,236]	7 [0,276]	14 [0,551]	16 [0,630]
G1	10.5[0,413]	13.5 [0,531]	18 [0,708]	23 [0,905]
H1	14,7 [0,44]	18 [0,709]	27.5 [1,082]	24 [0,945]
H2	29 [1,142]	34 [1,339]	52.2 [2,055]	53.5 [2,106]
H3	43 [1,693]	50 [1,969]	78 [3,071]	82.5 [3,250]
H4	57 [2,244]	66 [2,598]	104 [4,094]	110.5 [4,350]
L1	19.50 [0,768]	23.6 [0,929]	36.5 [1,437]	35.5 [1,397]
L2	33.50 [1,319]	40.2 [1,583]	61.50 [2,421]	64 [2,520]
L3	47.5 [1,870]	56.1 [2,209]	87.5 [3,445]	92.5 [3,642]
L4	61.7 [2,429]	72 [2,835]	113.5 [4,468]	121 [4,763]
L5	70.5 [2,776]	79.4 [3,126]	125.2 [4,930]	132.8 [5,228]

SPECIAL CAVITIES

ATLANTIC Fluid Tech
WWW.SUMY.IR

Dimensions: mm [inches]

VP000005

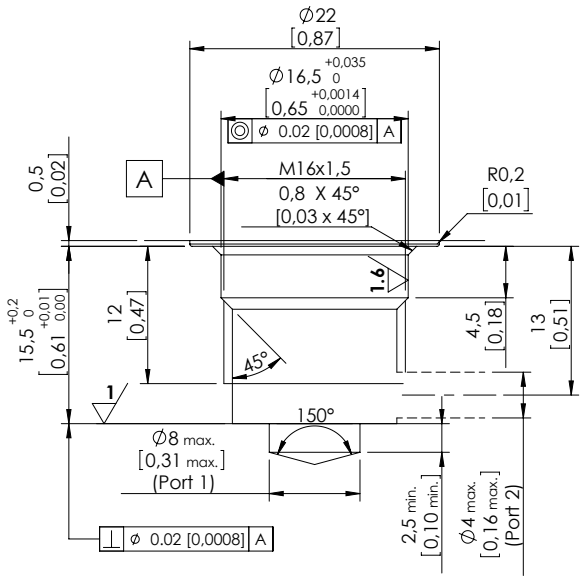

VP000006

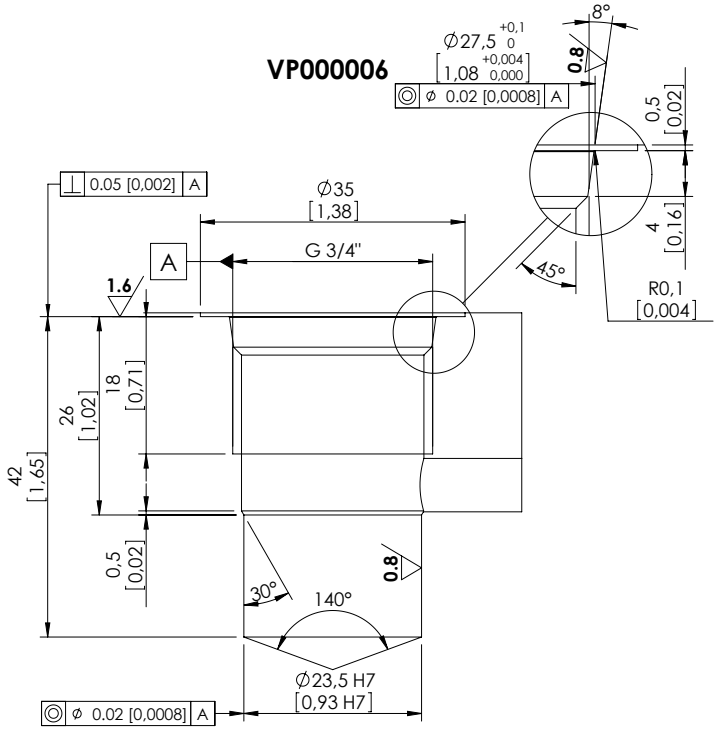

VP000008

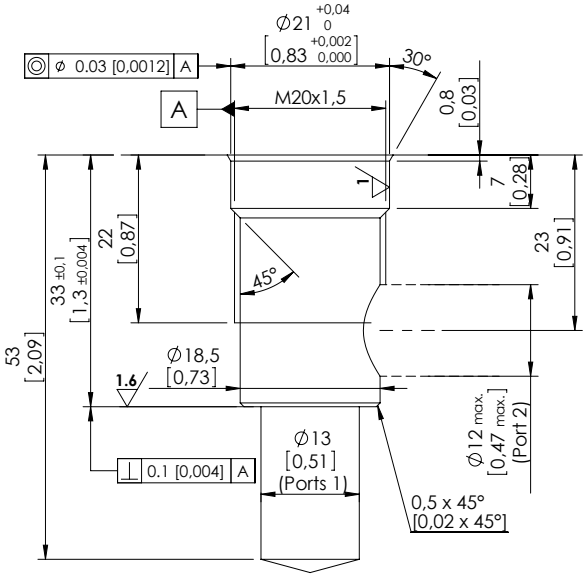

VP000016

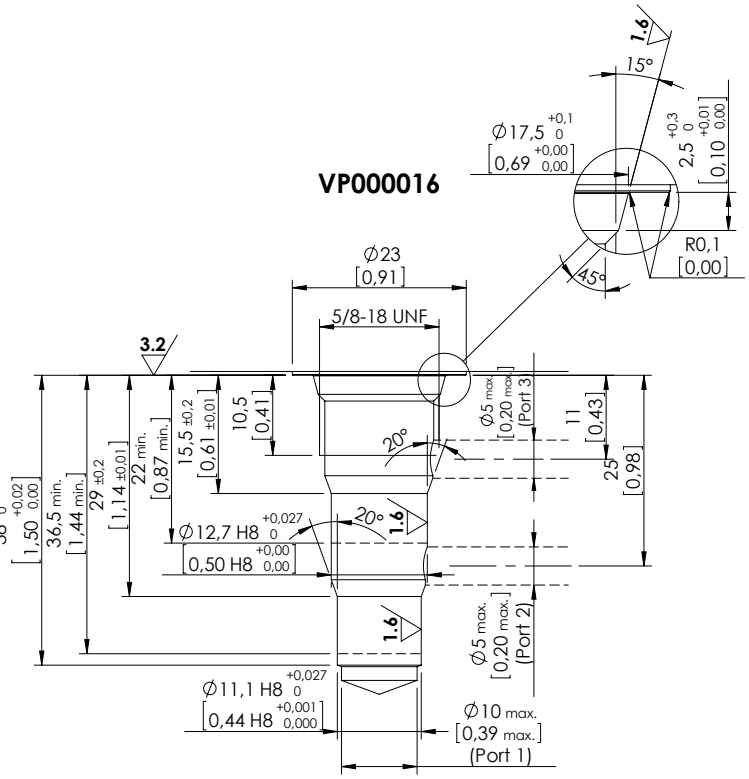

General Tolerances:

◎	**0.03 [0,0012]**
⊥	**0.02 [0,0008]**

SPECIAL CAVITIES

ATLANTIC Fluid Tech
WWW.SUMY.IR

Dimensions: mm [inches]

VP000018

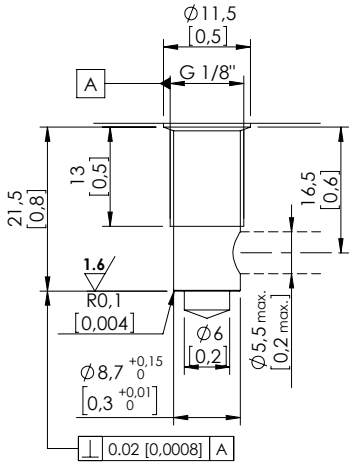

VP000028

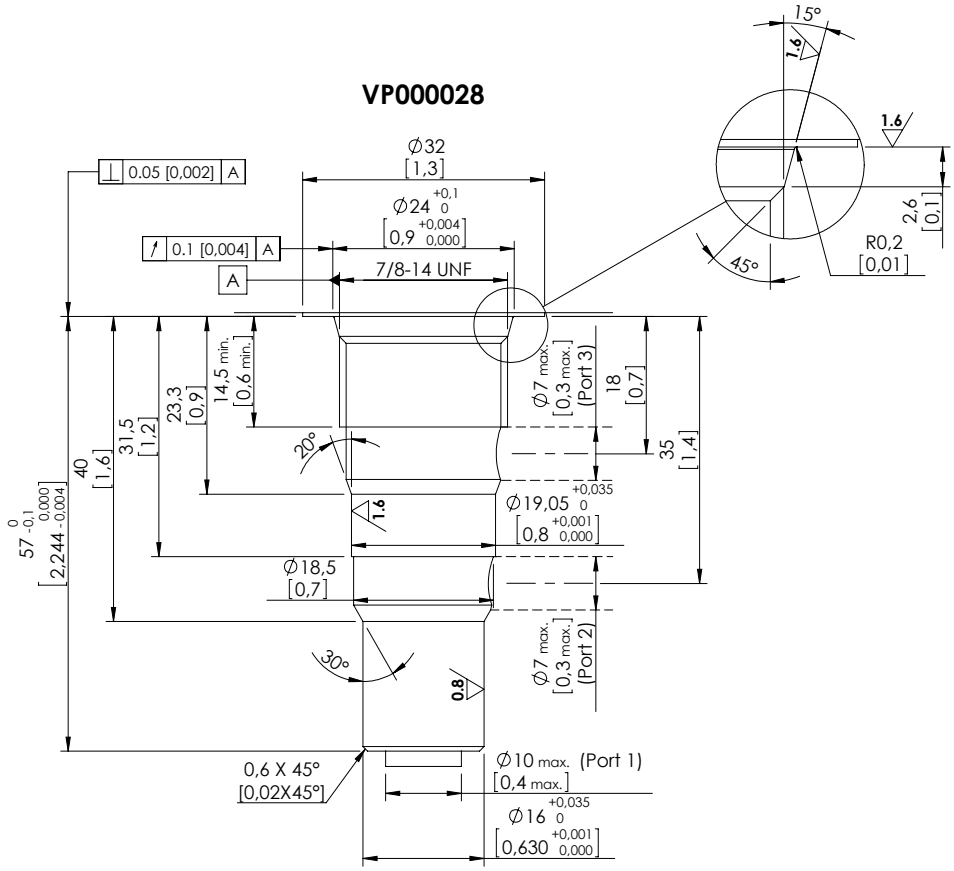

General Tolerances:

◎	**0.03 [0,0012]**
⊥	**0.02 [0,0008]**

SPECIAL CAVITIES

ATLANTIC Fluid Tech
WWW.SUMY.IR

Dimensions: mm [inches]

VP000058

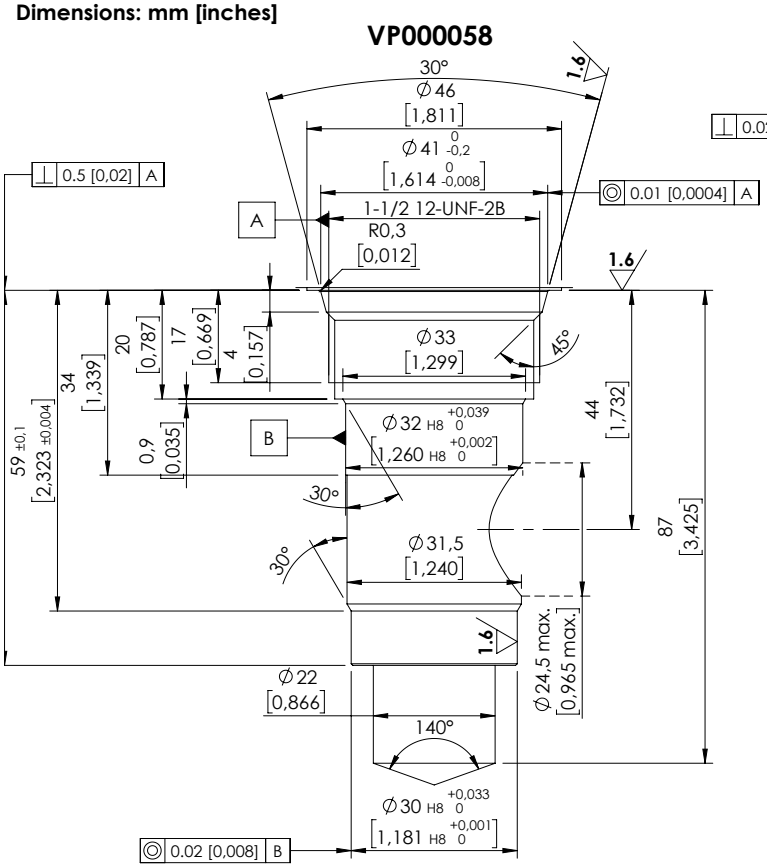

VP000064

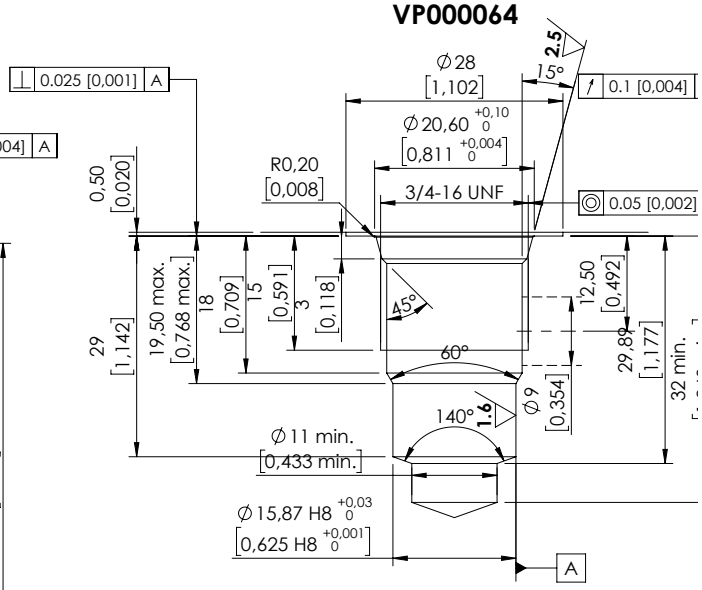

VP000065

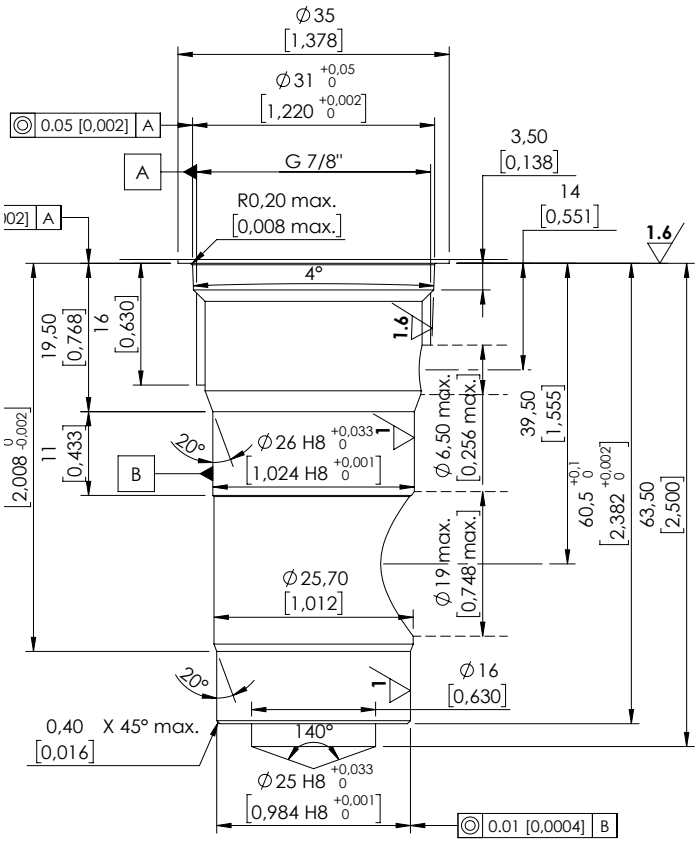

VP000079

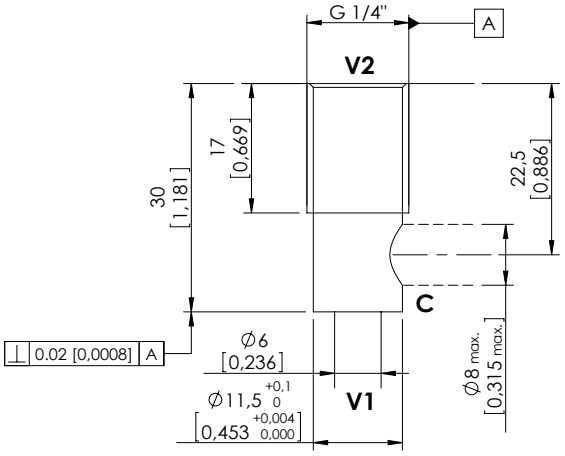

General Tolerances:

◎	**0.03 [0,0012]**
⊥	**0.02 [0,0008]**

SPECIAL CAVITIES

ATLANTIC Fluid Tech
WWW.SUMY.IR

Dimensions: mm [inches]

VP000080

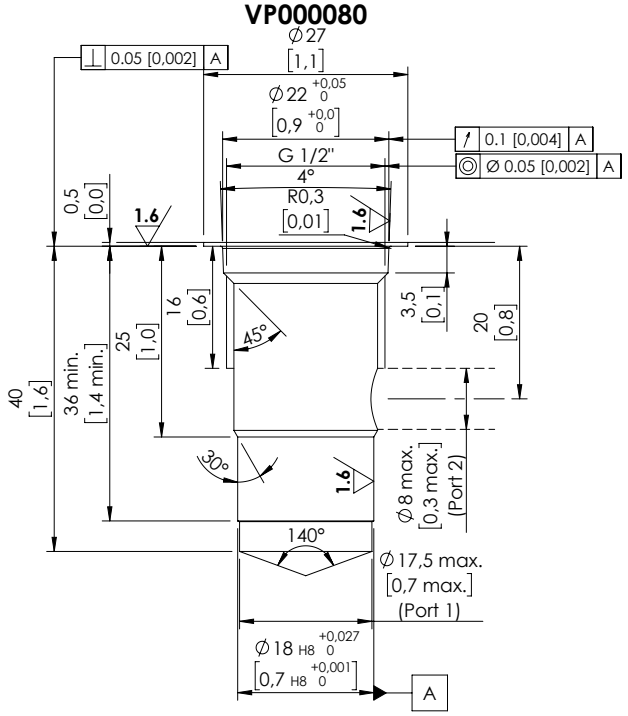

VP000086

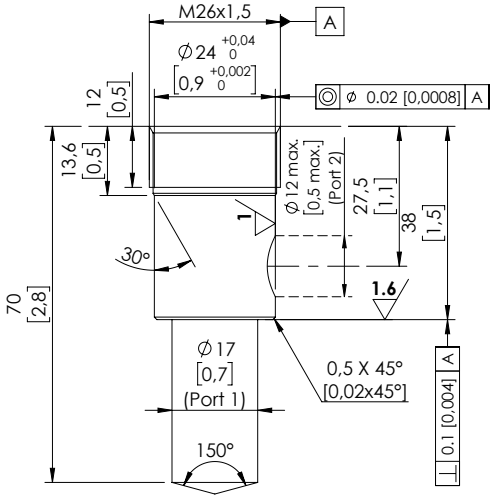

VP000096

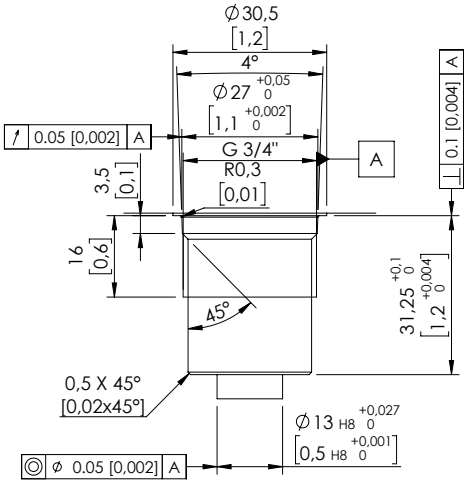

General Tolerances:

◎	**0.03 [0,0012]**
⊥	**0.02 [0,0008]**

SPECIAL CAVITIES

ATLANTIC Fluid Tech
WWW.SUMY.IR

Dimensions: mm [inches]

VP000132

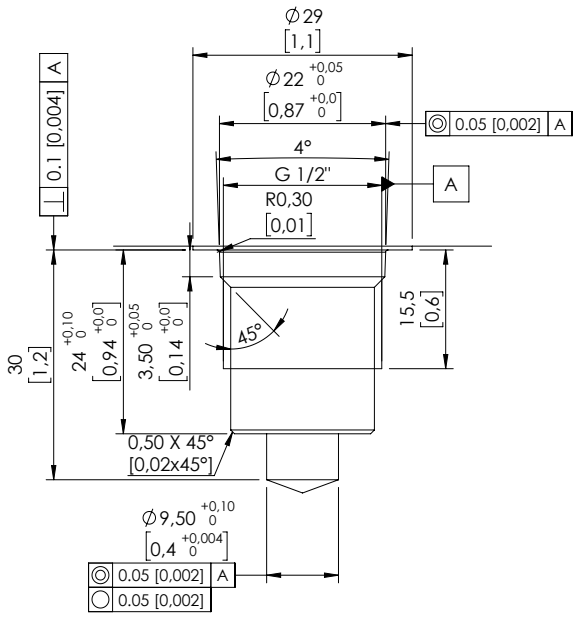

VP000158

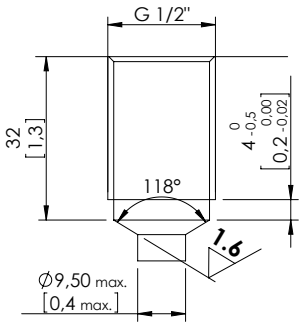

General Tolerances:

◎	**0.03 [0,0012]**
⊥	**0.02 [0,0008]**

SPECIAL CAVITIES

ATLANTIC Fluid Tech
WWW.SUMY.IR

Dimensions: mm [inches]

VP000178

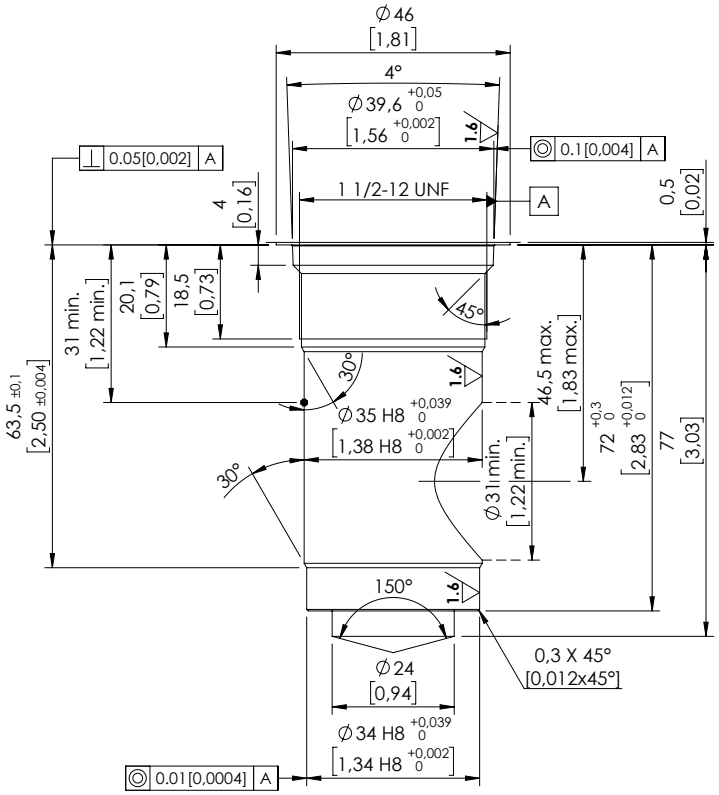

VP000180

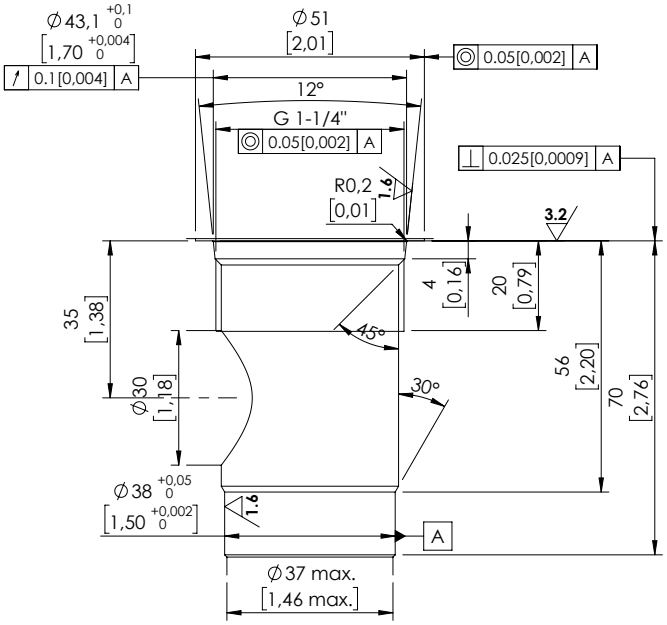

VP000198

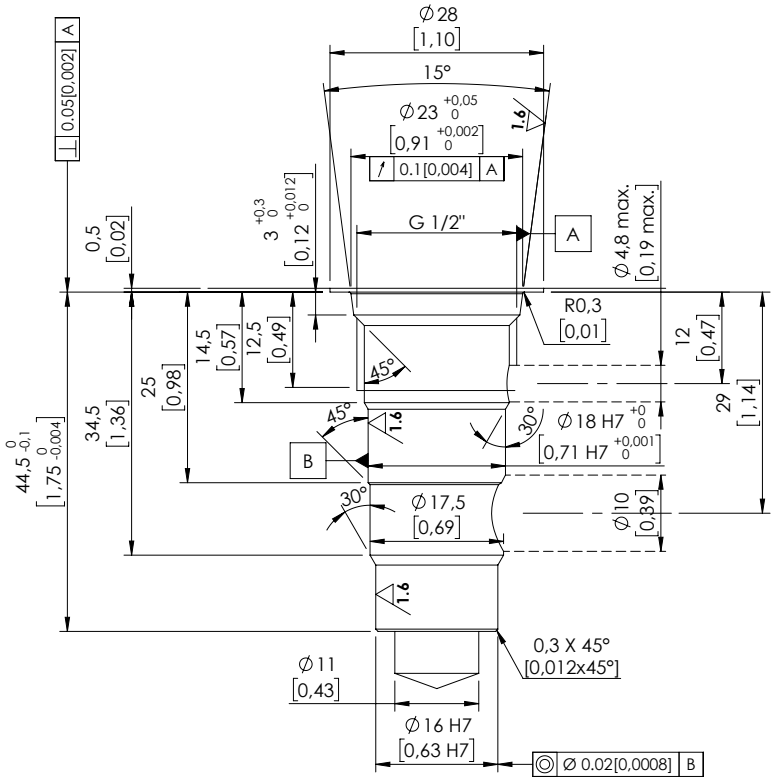

General Tolerances:

◎	**0.03 [0,0012]**
⊥	**0.02 [0,0008]**

SPECIAL CAVITIES

ATLANTIC Fluid Tech
WWW.SUMY.IR

Dimensions: mm [inches]

VP000202

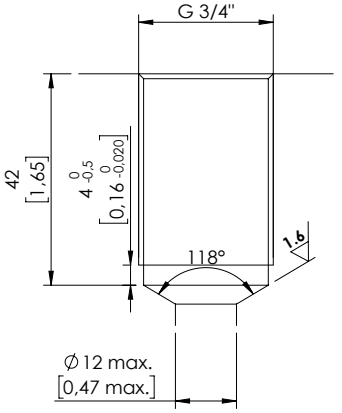

VP000204

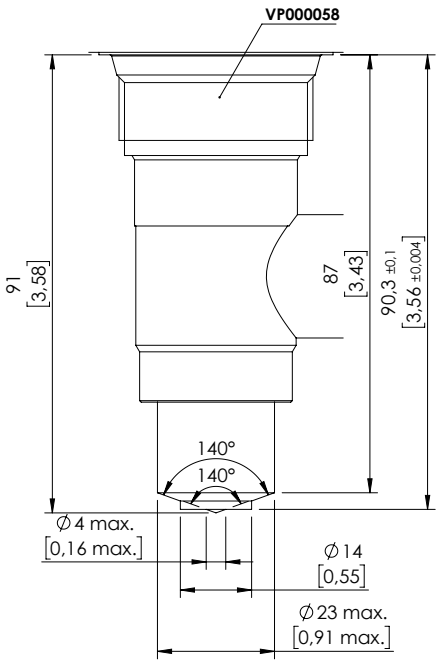

VP000249

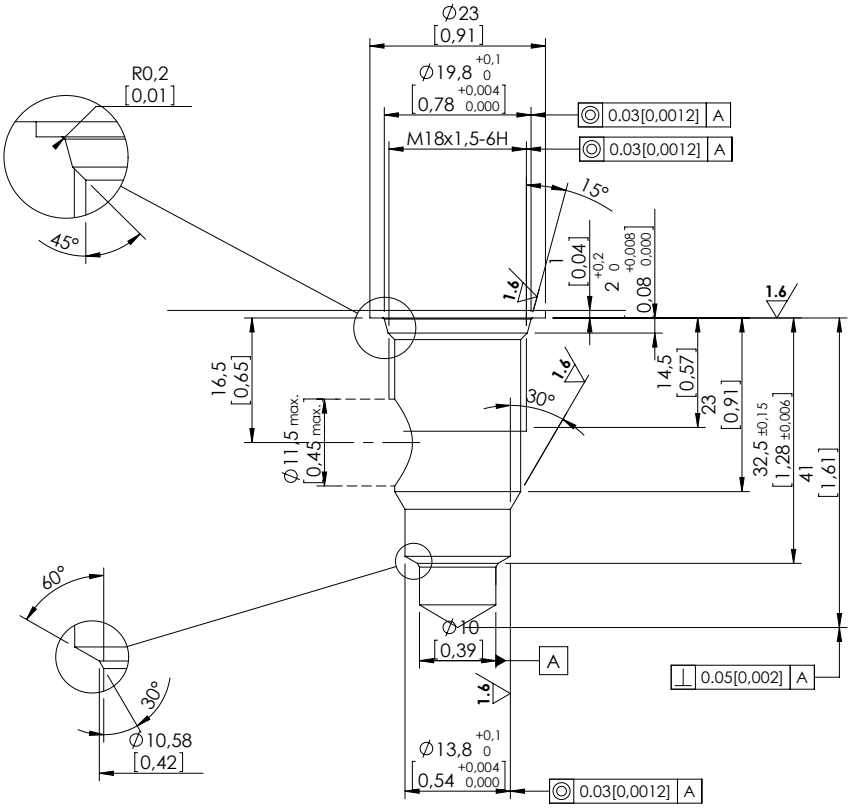

General Tolerances:

◎	**0.03 [0,0012]**
⊥	**0.02 [0,0008]**

SPECIAL CAVITIES

ATLANTIC Fluid Tech
WWW.SUMY.IR

Dimensions: mm [inches]

VP000307

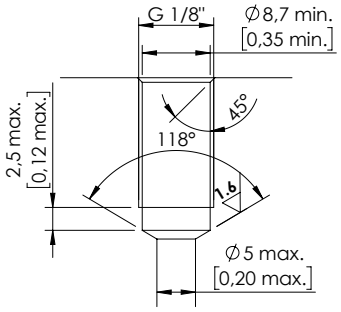

VP000309

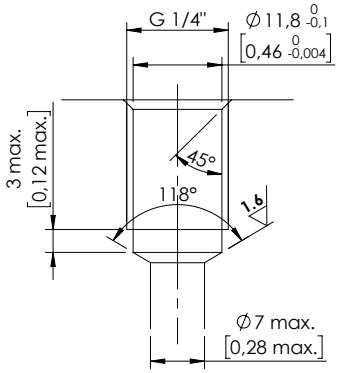

VP000310

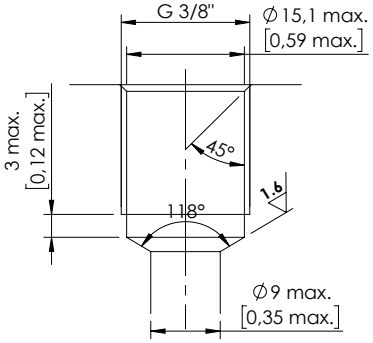

VP000311

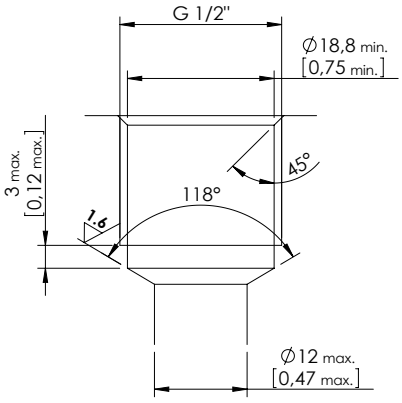

VP000312

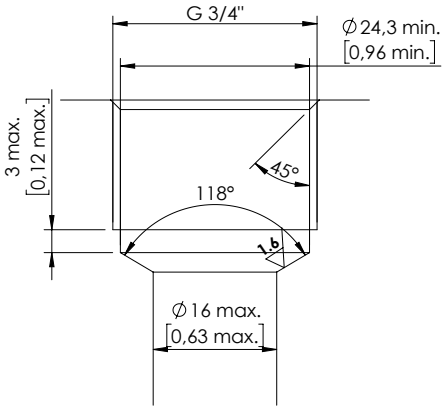

VP000314

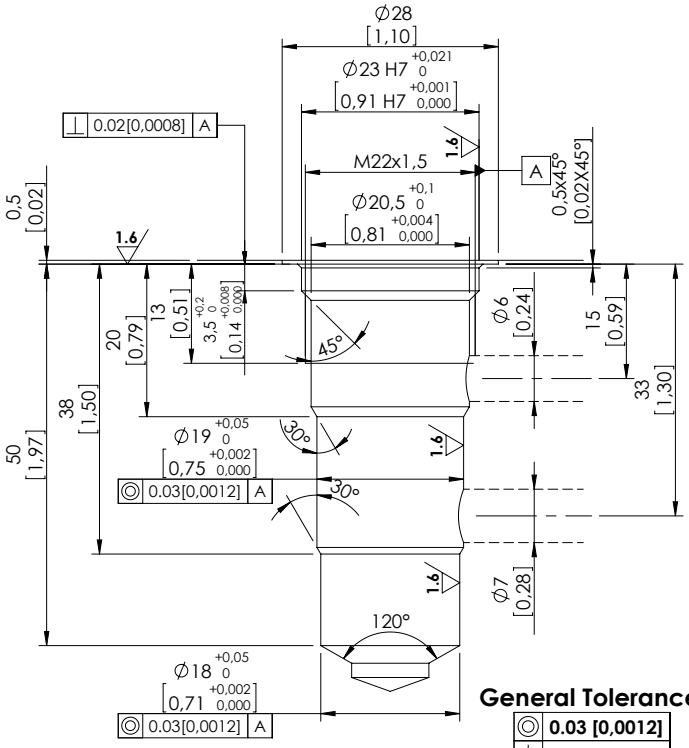

VP000330

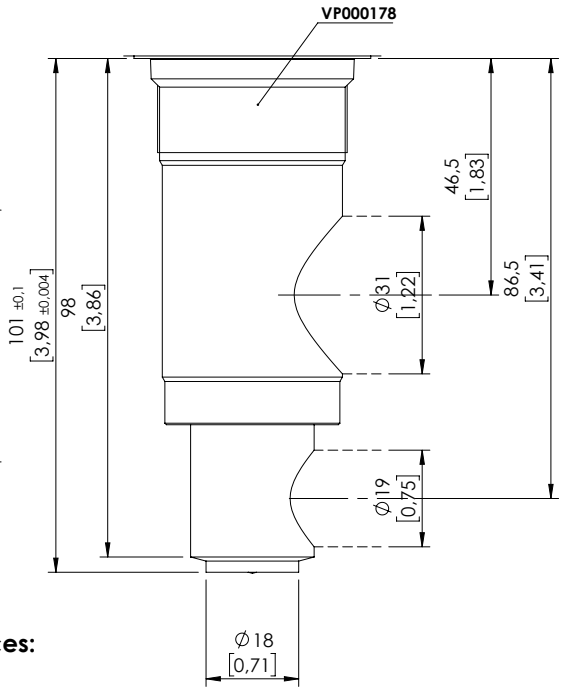

General Tolerances:

◎	**0.03 [0,0012]**
⊥	**0.02 [0,0008]**

SPECIAL CAVITIES

ATLANTIC Fluid Tech
WWW.SUMY.IR

Dimensions: mm [inches]

VP000371

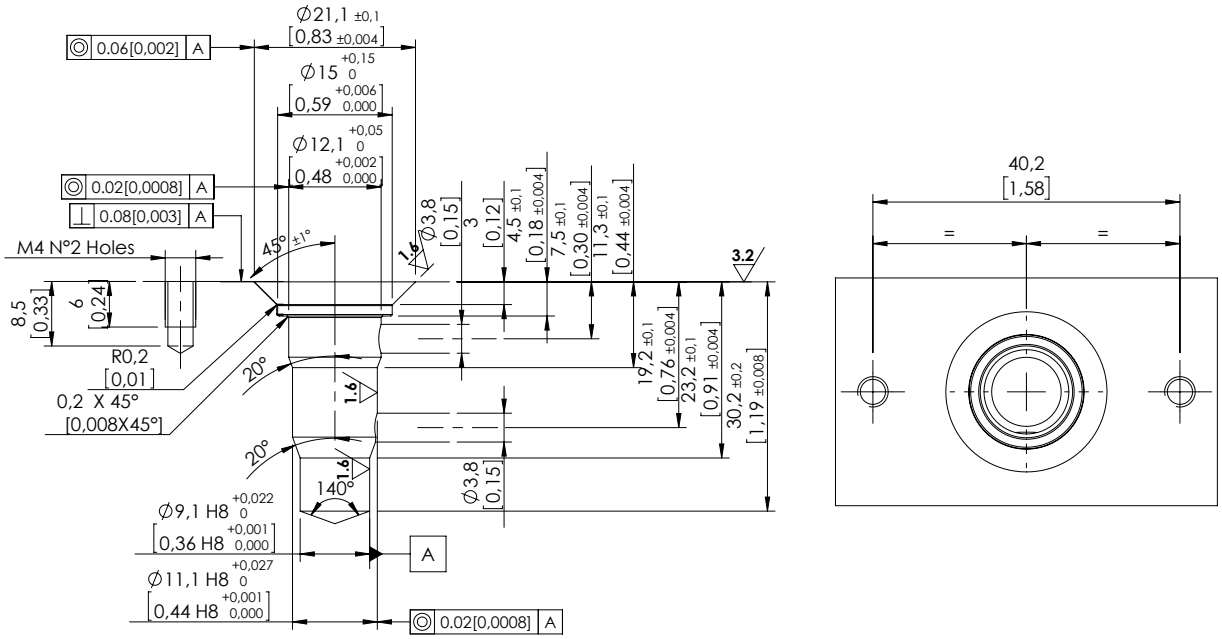

VP000445

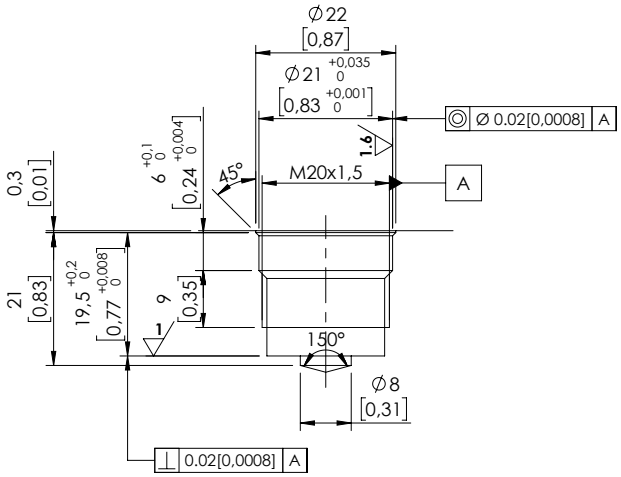

General Tolerances:

◎	**0.03 [0,0012]**
⊥	**0.02 [0,0008]**

SPECIAL CAVITIES

ATLANTIC Fluid Tech
WWW.SUMY.IR

Dimensions: mm [inches]

VP000555

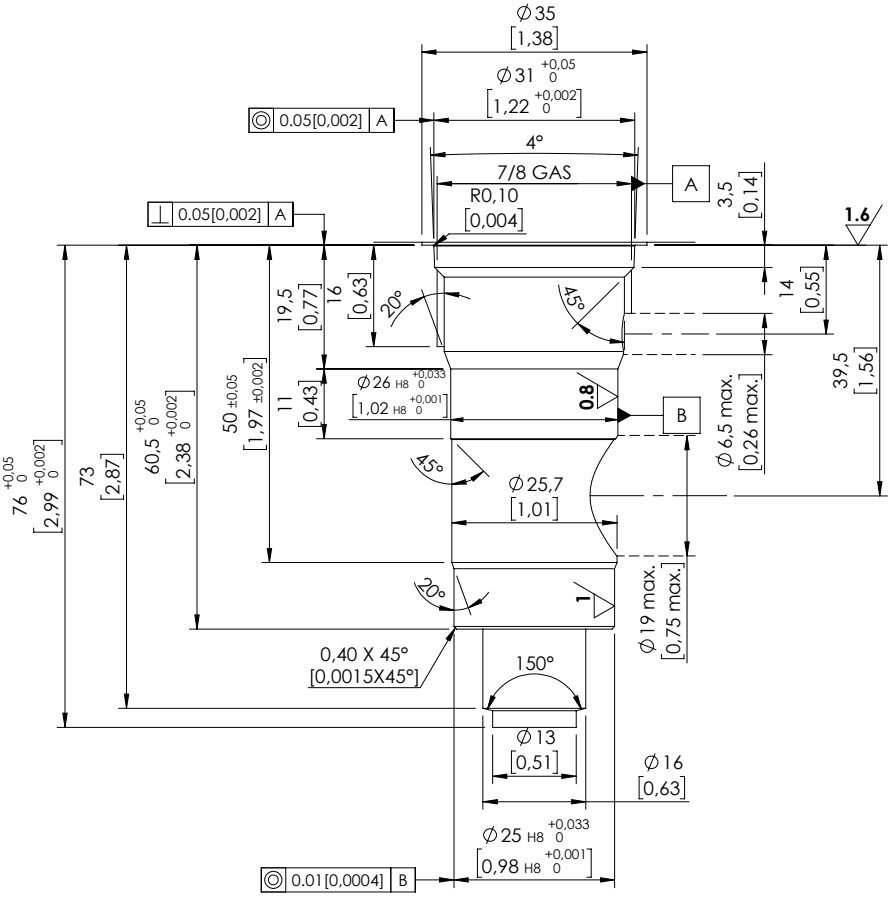

General Tolerances:

◎	**0.03 [0,0012]**
⊥	**0.02 [0,0008]**

TECHNICAL DATA

SAE FLANGE

ATLANTIC Fluid Tech
WWW.SUMY.IR

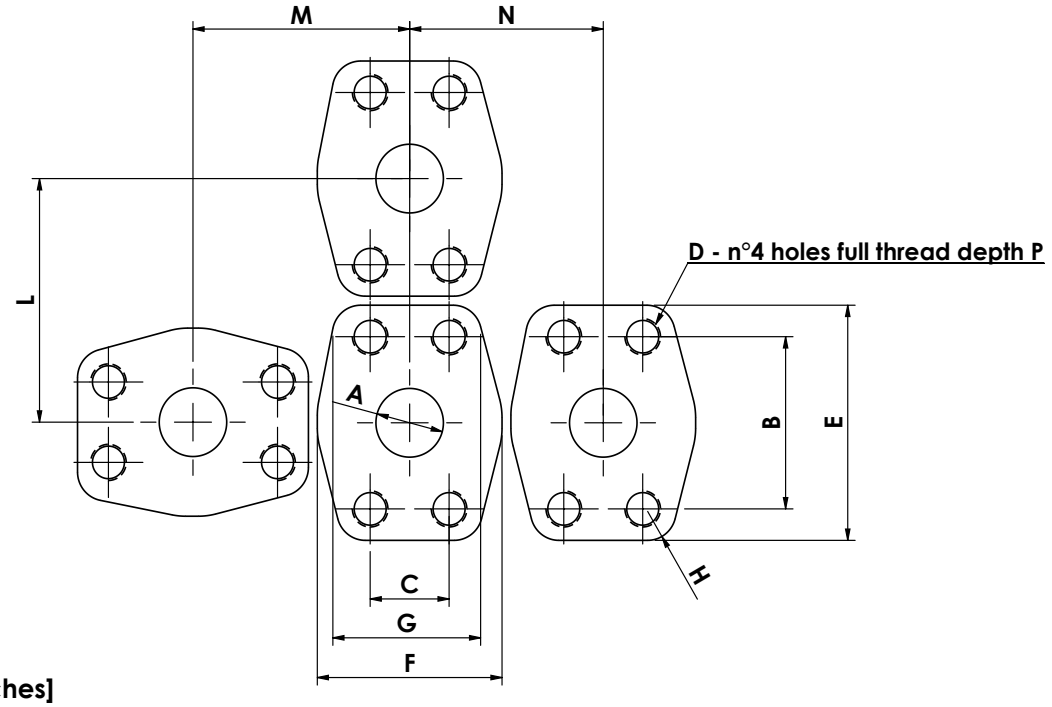

Dimension: mm [inches]

FLANGE SAE 3000 PSI (MEDIUM PRESSURE)						
		1/2	3/4	1"	1" 1/4	1" 1/2
A	∅ max.	13 [0,512]	19 [0,748]	25,5 [1,00]	32 [1,26]	38 [1,496]
B	-	38,1 [1,5]	47,6 [1,874]	52,4 [2,06]	58,7 [2,311]	69,9 [2,752]
C	-	17,5 [0,689]	22,2 [0,874]	26,2 [1,03]	30,2 [1,189]	35,7 [1,406]
D	unc-2B	5/16-18	3/8-16	3/8-16	7/16-14	1/2-13
	metric	M8	M10	M10	M10	M12
E	-	54 [2,13]	65 [2,559]	70 [2,756]	79 [3,110]	94 [3,701]
F	-	46 [1,81]	52 [2,047]	59 [2,323]	73 [2,874]	83
G	min.	33 [1,29]	41 [1,614]	48 [1,889]	54 [2,13]	83 [3,268]
H	radius	8 [0,315]	9 [0,354]	9 [0,354]	10 [0,393]	12 [0,472]
L	min.	56 [2,205]	68 [2,677]	72 [2,835]	82 [3,228]	96 [3,779]
M	min.	52 [2,05]	61 [2,402]	67 [2,638]	78 [3,070]	90 [3,543]
N	min.	49 [1,929]	55 [2,165]	61 [2,402]	75 [2,953]	85 [3,346]
P	min. mm	24 [0,945]	22 [0,866]	22 [0,866]	28 [1,102]	27 [1,063]

FLANGE SAE 6000 PSI (HIGH PRESSURE)						
		1/2	3/4	1"	1" 1/4	1" 1/2
A	∅ max.	13 [0,512]	19 [0,748]	25,5 [1,00]	32 [1,26]	38 [1,496]
B	-	40,5 [1,594]	50,8 [2]	57,2 [2,252]	66,7 [2,626]	79,4 [3,126]
C	-	18,2 [0,717]	23,8 [0,937]	27,8 [1,094]	31,8 [1,252]	36,5 [1,437]
D	unc-2B	5/16-18	3/8-16	7/16-14	1/2-13	5/8-11
	metric	M8	M10	M12	M14	M16
E	-	56 [2,205]	71 [2,795]	81 [3,189]	95 [3,740]	113 [4,449]
F	-	48 [1,889]	60 [2,362]	70 [2,756]	78 [3,071]	95 [3,740]
G	min.	38 [1,496]	48 [1,889]	54 [2,126]	60 [2,362]	70 [2,756]
H	radius	8 [0,315]	10 [0,393]	12 [0,472]	14 [0,551]	17 [0,669]
L	min.	59 [2,323]	75 [2,953]	84 [3,307]	99 [3,898]	116 [4,567]
M	min.	56 [2,205]	70 [2,756]	80 [3,149]	90 [3,543]	108 [4,252]
N	min.	53 [2,087]	66 [2,598]	75 [2,953]	83 [3,268]	101 [3,976]
P	min. mm	21 [0,827]	24 [0,945]	27 [1,063]	25 [0,984]	35 [1,378]

ATLANTIC
Fluid Tech
WWW.SUMY.IR

TECHNICAL SPECIFICATIONS

ATLANTIC Fluid Tech

TECHNICAL SPECIFICATIONS

Modena, 22/12/2023

MATERIALS

CARTRIDGES AND INTERNAL COMPONENTS: Cartridge bodies are manufactured from high grade cold drawn steel bar, all of the external parts are zinc plated for longer durability in challenging environments. The valve's internal working parts are hardened and ground (or lapped) for maximum performance and durability.

MANIFOLDS: Cartridges, parts in body valve manifolds and integrated circuit blocks are manufactured from high strength aluminum bars and high quality steel. As a standard, steel manifolds are always zinc plated (Crome 3 treatment) whilst aluminum bodies can be anodized upon request. For complete specifications and compatibilities, please consult our Engineering department.

For pressures above 210 bar we recommend using steel bodies. In most cases the aluminum bodies are strong enough, but if transient peak pressures are frequently encountered, there is the possibility of fatigue cracks.

COILS: the external encapsulating material of our coils is made of class H thermoplastic compound as well as internal copper wire.

PORTS

The standard port dimension on our valves, when not flanged, is BSPP size, ranging normally between G1/4" and G1-14". SAE 'O' Ring and NPT ports are available on request, as well as special flange dimensions.

SEALS, BACK-UP RINGS AND SLIDE RINGS

We use Acryl-Nitrile Butadiene NBR (BUNA-N) seals as standard for temperatures between -30°C and +100°C. Viton seals or other compounds are available on request.

Back-up rings and slide rings are made of reinforced poly-tetrafluoroethylene (PTFE).

STORAGE OF NEW VALVES

The valves must be stored in their original plastic envelopes or cartoon boxes. In a dry, dust-free atmosphere, free of corrosive agents, with a low moisture content and no large variations in temperature. They should not be exposed to direct sun light or sources of heat or ozone (as this could cause the fast wearing of valve seals). Storage temperature must be between -20°C and +50°C.

HANDLING AND INSTALLATION OF VALVES

We recommend the installation and the use of our valves be carried out by expert and qualified people with perfect knowledge of the product. AFT will not be responsible for improper use of its products. For any clarification, please contact AFT sales network.

The valve handling must be done in accordance with the weight of the box and of the valve itself, for more information please refer to your Country rules. Valves over a specific weight are equipped with threads where a hook can be installed; in this way the valve can be attached and lifted using mechanical devices.

FLUIDS AND WORKING TEMPERATURE RANGE

The recommended fluid is mineral oil based fluid, such as HL type (DIN 51524 part 1) or HLP type (DIN 51524 part 2) with an operating viscosity between 10 and 380 cSt. High viscosity and low temperatures may lead to a slower valve response than in warm oil conditions.

For water based fluids, such as 95/5 and 60/40 emulsions, please consult AFT sales network.

Fluid working temperatures should be maintained between -30°C and +100°C. For other working conditions, please consult AFT sales network.

FUNCTIONAL TEST

All the valves we sell are subjected to functional tests. The tests are carried out using ISO VG 46 hydraulic oil (viscosity of 46cSt at 40°C) and with oil temperature between 30 and 40 °C.

FILTRATION

Our valves are precision-machined mechanical components: the majority of valves failures (during normal working conditions) occurs due to hydraulic circuit contamination. We recommend the following filtration levels:

SYSTEM WORKING PRESSURE:	NOM. FILTRATION	CONTAMINATION CLASS:	
> 250 BAR:	10 µm	**ISO 4406**: 17/14	**NAS 1638**: 8
BETWEEN 100-250 BAR:	15 µm	**ISO 4406**: 18/14	**NAS 1638**: 9
< 100 BAR:	25 µm	**ISO 4406**: 19/15	**NAS 1638**: 10-11

INTERNAL LEAKAGE

Many of our valves have a leak proof seat design: this means that the maximum allowed oil leakage value is 1 cc/min (about 15-20 drops/min) measured with 46cSt oil at 40°C at the maximum permitted pressure. However, normal leakage is found to be less than 10 drops/min and tends to decrease or disappear after few seconds of rest. These are within the acceptable limits, note however that each type of valve has different performances depending on its design: please refer to our Engineering dept. for information about each valve type.

VALVE SETTING AND TAMPERPROOF DEVICES

SETTING: Our valves are supplied Factory set as stated on the corresponding catalogue page. The adjustment range and maximum setting figures shown on the catalogue are the safe limits according to each valve specific design: in the majority of cases higher or lower values can be attained. Any setting changes should be approved in writing prior by our Engineering dept. Any setting change must be carried out using an appropriate gauge or pressure/flow measuring equipment.

TAMPERPROOF: The majority of our cartridges and parts in body valves have the possibility to be equipped with a plastic tamperproof cap to prevent any undesired modification of valve setting: please refer to each catalogue page for the choice of the correct cap. On request, valve can be supplied already Factory set and sealed.

CARTRIDGE VALVE INSTALLATION

The correct machining of cavities is critical in ensuring the best performance of our cartridges. Cavity tools are available for sale and cavity drawings can be found in the specific section of our catalogue or requested from our Engineering dept.

To correctly install cartridges into their cavity, please follow this procedure:

- Check that external seals and back-up ring are correctly fitted and without damage;
- Ensure the cavity and cartridge body are clean and without any visible contamination;
- If necessary, immerge cartridge body into clean oil to take away any impurity and to lubricate the seals;
- Screw the cartridge into its cavity by hand, until mechanical contact is reached, being sure that during tightening that there is no abnormal friction between the cartridge and its cavity;
- Tighten the cartridge with a calibrated torque wrench applying the correct torque as specified on the corresponding catalogue page.

TORQUE FIGURES

So as to ensure correct cartridge behavior and to prevent any internal friction the correct torque must always be applied when fitting cartridges into their cavities: the correct torque values can be found on each cartridges' catalogue page.

COILS

ED RATE: All our coils are rated ED 100%, they can remain 100% energized through out the working cycle, provided the nominal voltage and maximum ambient temperatures are not exceeded.

TEMPERATURE CLASS: As standard the encapsulating material and copper wire are rated CLASS H: this means that the ambient temperature + temperature rise due to coil operation cannot exceed 180 °C. Class F coils are available on request (maximum 155 °C). The external surface of the coil can easily reach very high temperatures after long energizing period (80-100°C): Particular care must be taken to avoid accidental injuries to workers and operators. To prevent premature burning of the coils, it is requested that coils are installed in such a way to aid air ventilation around them and thus preventing excessive heating of the surrounding ambient.

IP PROTECTION CLASS: The standard insulation class of our coils is IP65, provided that all the seals between coil and solenoid cartridge tube/nut and between coil and connector are correctly fitted. Coils with Deutsch connector are rated with an IP69K insulation class.

INLET VOLTAGE: Our coils normally accept inlet voltage fluctuations of between ±10% without any compromise to normal functionality (unless specified on the coil catalogue page). If specific inlet voltages are required, please refer to our Engineering dept.

POWER SUPPLY: Our solenoid operated cartridges are designed to operate with DC (direct current) power supply: in case of AC (alternate current) applications, please apply between power supply and coil a current rectifier and use the proper RAC (rectified alternate current) coil.

ENVIRONMENTAL CARE AND PRODUCTS DISPOSAL

AFT products are made mainly with metallic materials; steel, aluminum, cast iron and plastic materials (ABS, PTFE, NBR) that can be recycled after being cleaned of hydraulic fluids if present.

Our packaging materials are made mainly of paper, cardboard, wood, plastic and polyethylene which can be recycled after being cleaned from hydraulic fluids if present.

Hydraulic fluids must be disposed of in accordance with the laws and procedures of each country.

During handling, installation and use it is necessary to avoid the dispersion of hydraulic fluid into the environment, in case of accidental dispersion it is necessary to follow your local rules.

MTTFd CERTIFICATE

The MTTFd value (mean time to dangerous failure) of a component is used to calculate the probability of a potentially dangerous failure of a machine or system.

Hydraulic products from Atlantic Fluid Tech are designed and manufactured in according with UNI ISO 13849-2:2012 principles; products technical sheets are showing all the information (maximum pressure, maximum flow, materials, ratings, operations…) that must be observed by designers and users of this products.

For hydraulic components (e.g., valves), a MTTFd value of 150 years can be presumed according to UNI ISO 13849-1:2016 if the fundamental and proven safety principles according to ISO 13849-2:2012 are adhered to as shown in table C.1 & C.2.
The MTTFd value can be estimated higher if the average number of annual operations (nop) is less than 1 million switching cycles.

An MTTFd value can be estimated according to the table below:

	Basic and well-tried safety priciples according to ISO 13849-2:2012	Relevant Standards	Typical Values MTTFd (years) B10D (cycles)
Hydraulic components with nop ≥ 1,000,000 cycles per year	Tables C.1 and C.2	ISO 4413	MTTFD = 150
Hydraulic components with 1,000,000 cycles per year > nop ≥ 500,000 cycles per year	Tables C.1 and C.2	ISO 4413	MTTFD = 300
Hydraulic components with 500,000 cycles per year > nop ≥ 250,000 cycles per year	Tables C.1 and C.2	ISO 4413	MTTFD = 600
Hydraulic components with 250,000 cycles per year > nop	Tables C.1 and C.2	ISO 4413	MTTFD = 1200

The customer is responsible for the implementation and operations of the valves according to UNI ISO 13849-1:2016.
The latter is responsible for machine safety, including the correct design and evaluation of hydraulic valves used in safety-related parts of control systems. As a result, the customer is responsible for ensuring compliance with normative and statutory requirements in the countries concerned.

Engineering Department

ATLANTIC Fluid Tech

ATLANTIC
Fluid Tech
WWW.SUMY.IR

GENERAL TERMS OF SUPPLY

ATLANTIC Fluid Tech

GENERAL TERMS OF SUPPLY – OUTLINE AGREEMENT

San Cesario Sul Panaro (MO): 31/10/2011

1 SUBJECT

The present general terms of supply (or outline agreement) have been drafted to regulate all the supply relations existing between Vendor and Customer, which will be conducted at the conditions hereinafter described and/or on the basis of any additional agreements specifically entered into between the parties.

If these general terms of supply should contain any clauses or prescriptions that conflict with specific conditions of supply agreed between the parts, these latter shall prevail.

2 CUSTOMER ORDERS

The Customer's orders must be transmitted to the Vendor in written form (also via fax, or using telecommunications and electronic means) and must contain the following information:

a) date and place of issue of the order;
b) exact denomination of the Customer company and its complete address;
c) a reference to the relative offer made by the Vendor company (if such an offer exists);
d) complete Vendor's identification code, with a description of the product ordered if necessary and the relative technical specifications of all the products to which the order refers;
e) the required quantities;
f) the agreed prices (if available);
g) the quality requirements with which the Vendor must comply in execution of the order;
h) the signature of an authorised representative;
i) the required term of delivery;
l) terms of payment;
m) shipping agent.

Orders are intended as accepted when the relative order confirmation duly signed by the Vendor arrives at the registered address of the Customer, or if such a document is not forthcoming, orders will be considered to be confirmed by the Vendor at the terms of supply specified herein if they are not explicitly refused in writing within the term of 10 working days from the date of the order in question.

2.1 PRICES

The prices established by the Vendor and/or agreed upon with the Customer shall remain fixed for the entire period of the order or for the agreed period; said period shall not be subject to modification except in the presence of exceptional events and/or causes of force majeur (e.g. uncontrolled price increases of raw materials or energy, etc.); in such cases new agreements will be entered into with customers.

3 EXECUTION OF THE CONTRACT OF SUPPLY - AMENDMENTS

The terms of the contract of Supply are intended as final and executive when:

- the Customer transmits to the Vendor the purchase order in written form relative to the ordered product, specifying the requirements set down in heading 2 above;
- the Vendor has issued its Order confirmation and transmitted it to the Customer, or has failed to refuse the order in writing within 10 working days from the date of the order in question (See heading 2).

Once the contract has been signed, it must be fully and duly executed by the parties. Any amendments or cancellations of the contract can only take place further to the stipulation of agreements between the parties (Vendor and Customer) that take into account, on a reciprocal basis, any possible compensation for reimbursement of expenses sustained (materials, labour, etc.) to be paid to the more diligent party that receives such a request for amendment or cancellation.

In any event, the Customer is entitled to request modifications relative to orders it has already issued in relation to the quantity and/or characteristics of the ordered products, by means of the issue and transmission to the Vendor of a specific order variant, which shall be construed as implicitly accepted by the Vendor if this latter fails to raise any objections within the term of 10 working days from the receipt of such an order variant.

The execution of the contract of supply can be suspended and/or cancelled, also without notice to the customer, due to causes of force majeur (e.g. grave natural disasters, social unrest, epidemics, etc.) that are outside the Vendor's control.

4 TECHNICAL MODIFICATIONS

Except in the presence of contrary agreements with Customers, the Vendor can make technical modifications to the product specifications without notice; in any event, the Vendor undertakes to execute customer orders/contracts that are already confirmed without applying any modifications and/or anyway guaranteeing interchangeability of the relative products.

5 PRODUCT QUALITY AND VERIFICATION OF CONFORMITY

All the products are subject to the necessary checks/tests in the various production phases in order to guarantee conformity with the specifications and calibrations indicated in the catalogues, drawings, and/or technical datasheets; moreover, the Vendor's production process complies with the Quality System requirements defined by UNI EN ISO 9001, certified by an accredited Institute. The Customer is entitled make visits to and to carry out quality audits at the Vendor's plant after arranging an appointment for such occasions.

Because of the large range of technical features and operating conditions of the equipment manufactured by the Customer, the Vendor shall not assume any liability for the results of tests performed by third parties. The Customer is therefore responsible for the final choice of the valve and for the adoption of all the measures required to achieve the required functional and safety specifications on the system in which the valve is to be installed, in addition to the compliance with any specific standards applicable to the system in question.

In the event of nonconforming products the responsibility for which can be attributed to the Vendor, in addition to the warranty actions provided for in the following article 6, the Customer can demand that the Vendor perform the necessary corrective actions in order to improve its level of quality rapidly.

5.1 "FIRST SPECIMENS" CHECK

For new special products made to Customer's specifications or customised to a significant extent with respect to the equivalent standard products, when so requested by the Customer the Vendor can, further to prior agreement with the Customer, carry out checks on "First Specimens"; this procedure entails the supply of "Prototypes or Specimens" of Products accompanied by Test Certificates detailing dimensional checks and functional tests evaluating diverse technical aspects.

In this case the Customer's validation of subsequent supplies must be performed on the basis of the "First Specimens".

6 WARRANTY

The Vendor provides a warranty to the first Customer covering its valves against defects in material or workmanship for a period of 24 months from the time of first assembly, provided said first assembly takes place within 6 months from the date of manufacture as marked on the valve, and provided the valve is installed and utilised in accordance with the conditions of use prescribed by the Vendor and/or in compliance with the standards adopted in accordance with industrial best practices. Seals and O-rings are expressly excluded from the warranty.

This warranty is applicable exclusively to the first Customer/Purchaser of the Vendor's products and is not transferable.

In the event that the Customer considers that the goods or a part of the goods are defective for causes attributable to the Vendor, the Customer shall signal/protest the presence of the alleged defects by sending a detailed written report, thereby allowing the Vendor to verify the effective existence of the claimed defects/flaws by means of inspections performed by its technical personnel.

Having ascertained that the claimed defects are effectively present and having accepted that they are attributable to the fault of the Vendor, this latter undertakes to repair or replace the goods in question in a reasonable time interval and/or inform the Customer of the cause of such defects.

This warranty is not applicable to products that have been subject to conditions of contamination in the customer's hydraulic circuit, or to products that are incorrectly utilised or subject to tampering performed without the Vendor's supervision or authorisation.

The Vendor's warranty does not envisage pecuniary compensation or credit notes in respect of defective material; specifically, the Vendor shall not be held responsible under any circumstances for loss of earnings, costs of disassembly and reassembly of the product, for any damages connected with such an operation, and for any whatsoever cost relative to the installation of the repaired or replaced valves, including the costs arising in relation to system outages.

If the product supplied is to be assembled in plants potentially capable of causing third party damages of a magnitude that is significantly greater than the price of the product, it is the Customer's responsibility to adopt all the possible safety measures to avoid any such damage, since it is aware that series production of valves at market prices leads to the risk, albeit negligible, of the possible presence of defective parts.

If the Customer embarks on a recall or remediation campaign of its own machines, on any whatsoever market, in order to replace or repair parts that have been ascertained to be defective, this action will be undertaken on the basis of bilateral agreements to be defined.

If the Customer is subjected to legal proceedings for "civil product liability" or if it is accused of violation of legal prescriptions connected to the Vendor's products, the Customer must inform the Vendor immediately of such a situation, and the Vendor shall participate in the analysis of the problem in collaboration with the Customer.

Wherever considered necessary, specific agreements can be stipulated between Customer and Vendor as an alternative to the foregoing warranty procedures.

6.1 SUPPLY QUALITY OBJECTIVES

Specific supply quality objectives may be established in certain cases, to be agreed with Customers; in such cases the Vendor undertakes to cooperate with the Customer in order to define all the aspects necessary to fulfil the objectives in question, and the necessary actions that must be undertaken when such objectives are not achieved.

The possibility of economic recourse or penalties applied by the Customer in relation to the value of the supplies is not contemplated under any circumstances.

7 TECHNICAL ASSISTANCE

The Vendor guarantees to the Customer its availability to perform joint analyses, free of charge, of any defects reported by end users, also when such analyses are be carried out on the Customer's site; in this case, if the defectiveness is attributable to the responsibility of the Customer, the Vendor will issue a debit note relative to its services rendered. When the Customer requires the assistance of the Vendor's technical personnel on its sites it must make a written request to this effect (which can be transmitted also by e-mail or fax).

8 PRESCRIPTIONS OF INTENDED USE.

The Customer is expressly prohibited from using the products sold by the Vendor for purposes other than those set down in the offer or in the catalogues.
Specifically, the Vendor's Dealers or Agents are not authorised to approve the use of the products supplied for the following applications:

- systems for road vehicles for the transport of passengers or goods and subject to safety Standards and Directives, such as (without limitation) steering systems and brake systems
- aircraft or spacecraft;
- military equipment;
- rescue or emergency equipment or vehicles;
- systems to be used in conjunction with atomic installations;
- systems for use in explosive or otherwise hazardous environments.

If the Customer intends to use the goods supplied for any applications falling into one or more of the above categories or other similar categories, or for any applications other than those expressly described in the documentation, or in the presence of doubts concerning the intended application, it must seek prior specific approval directly from the Manufacturer and await the receipt of written authorisation for the intended application before proceeding.

Any damage suffered by the Customer or third parties arising from failure to comply with the terms of the prescriptions as at the foregoing subsections, or due to the failed observance of the specifications/directions for use supplied by the Vendor in the pages of its catalogue or in the assembly drawings, will be borne entirely by the Customer.

9 OBLIGATION OF DILIGENCE OF THE CUSTOMER IN THE PREVENTION OF DAMAGE IN THE CONTEXT OF ITS OWN PRODUCTION PROCESS.

If the product is utilised in a production process in such a way that any defects in the supplied product could give rise to substantial damages to the Customer or third parties deriving from production plant downtimes, the Customer undertakes to acquire a sufficient number of the parts in question to replace any faulty parts, and further undertakes to engineer the production process in such a way that such replacements can be carried out quickly and easily. In any event, the Vendor undertakes to repair or replace any parts that are found to be defective due to causes for which it is ascertained to be responsible.

10 DISCREPANCIES BETWEEN THE CONTENTS OF THE CUSTOMER OFFER AND THE PRESCRIPTIONS OF THE PRESENT TERMS OF SUPPLY.

Any aspects or conditions specified in the Customer Order that depart from contents of the present of terms of supply will be disregarded and construed as automatically replaced by the terms and conditions stated herein.

11 EXECUTION OF SUPPLIES ARRANGED PRIOR TO THE ACCEPTANCE OF THESE GENERAL TERMS.

If the supply is executed before the present general terms have been accepted by the Customer, the contract of supply shall be construed as having been entered into at the general terms and conditions specified on the back of the invoice and the delivery note, unless the Customer returns the goods to the Vendor, carriage forward, in exactly the same condition in which they were shipped within the term of 5 working days from the date of their receipt.

12 DELIVERY - DOCUMENTATION

Except in the presence of contrary agreements entered into between the parties, reference must be made in respect of the terms of delivery, to the terms specified by the Vendor in its Order Confirmation. At the order confirmation stage the Vendor can propose changes to the requested delivery date on the basis of its internal production requirements. The Customer reserves the right to accept or refuse the proposed modifications on the basis of its own requirements.

Any delivery terms specified in the Customer's orders or in other written documents exchanged between the parties shall not be considered to be binding except in the presence of a specific written agreement to such effect.

If the Customer intends to rescind from the contract and/or advance claims for compensation for damages further to failed observance of the terms of delivery, it must notify the Vendor expressly of such intentions at the time it transmits the order, and it must request an explicit confirmation from the Vendor specifying that it accepts such conditions.

All shipments will be sent with an attached delivery note bearing the following information: the order number, vendor's product code and Customer code (when required and present), description, quantity, identity of the shipping agent, and details concerning the transport means, number of items of packing, gross weight, etc.; the availability of this information serves to allow rapid correlation of the incoming goods with the shipping documents.

The Customer undertakes to inspect the goods delivered within and no later than 10 (ten) days from the time of receipt and it will automatically waive its rights to claim for missing items or manifest defects of the goods if it fails to declare such circumstances within the same 10 (ten) days from the time of receipt.

13 TRANSPORT

Except in the presence of contrary written agreements between the parties, the means of transport and the carrier will be chosen by the Customer.

Transport costs are charged to the Customer, which is required to refund them to the Vendor in the event that this latter party is obliged to pay them in advance on the Customer's account.

If the Customer fails to specify the required carrier and means of transport, these aspects can be chosen freely at the discretion of the Vendor, which will stipulate the transport contract in the name of the Customer and on the account of this latter.

Whether the carrier is chosen by the Customer or whether it is chosen by the Vendor in the name of and on the account of the Customer, the goods will be transported entirely at the risk and responsibility of the Customer, which can recourse directly to the carrier in the event of damage sustained during transport. The Customer is not entitled to make any claims against Vendor in such respects

14 PAYMENT

The terms and methods of payment for the supplies are specified in the Vendor's Offers and in the Customer's orders; when such orders are accepted by means of an order confirmation they become an integral and essential part of the supply contract.

Unless otherwise agreed, payment of the price of the supply must be made using the domicile and methods indicated by the Vendor. In the case of a delayed payment arrears interest will be applied in the measure of the Euribor 365 days rate increased by 4% per annum.

The Customer is not entitled to withhold sums from payments due to the Vendor for any whatsoever reason unless such action has been previously agreed upon and approved in writing by the Vendor.

15 EXTENDED PAYMENT – OWNERSHIP RESERVATION

If the payment is extended, the sale shall be understood to have taken place with reserved ownership pursuant to the terms of articles 1523 et seq. of the Italian civil code without any further provisions having to be taken successively. The costs involved in establishing proof of reserved ownership as specified in art. 1524 of the Italian civil code shall be borne entirely by the Customer.

16 FORM OF THE PROPOSAL, THE ACCEPTANCE AND ANY WHATSOEVER OTHER LEGALLY SUBSTANTIAL COMMUNICATION

The proposal, acceptance, any possible claims, and any other legally substantial communications must be written and signed in a legible manner. Such communications can be transmitted by any means, including fax and e-mail. In this latter eventuality the e-mail message must bear the author's name at the foot of the page.

17 CIVIL LIABILITY INSURANCE

The Vendor undertakes to take out and maintain a "Civil Product Liability Insurance" policy. On the request of the Customer, the Vendor will produce the documents relative to such an insurance policy.

Any accidents resulting in damage to third parties in which the Vendor's products are involved and which could give rise to product civil liability claims for compensation, must be communicated with the maximum promptness to the Vendor so that this latter can participate in the relative inquiry, also through its appointed technical expert, starting from the stage of the initial investigations.

18 CONFIDENTIALITY

The Vendor and the Customer reciprocally guarantee the confidentiality of all the information, data, and all documents that they exchange during the course of their business relations.

In particular documents which are sent to the Customer like drawings, technical specifications, test reports, etc. and containing manufacturing or functional data of the

products, have to be considered property of the Vendor and they cannot be disclosed or passed to third parties without the written consent of Vendor's Management.

19 ACCEPTANCE OF THE GENERAL TERMS OF SUPPLY – AMENDMENTS OR CANCELLATIONS

These General Terms of Supply can be transmitted to the Customer in the following ways:
- DIRECTLY, during the stipulation of a bilateral agreement or contract;
- INDIRECTLY, attached to the Vendor's Order confirmations.

In both cases they are considered to have been TACITLY ACCEPTED by Customers when no contrary communication is received within the term of 15 days from the date of receipt of the terms.

If the Customer intends to amend or rescind from these terms of supply it must provide the Vendor with written notice to this effect at least 3 months before the relative amendments or withdrawal are to take effect.

20 APPLICABLE LAW.

For all matters that are omitted from the present agreement the terms of supply shall be understood as being regulated by the relevant provisions of Italian Law.

If the Customer's domicile is in a foreign country, or in any cases in which the contract includes aspects of an "international nature", the present agreement and any disputes that should arise in relation to the same shall be subject to the provisions of Italian Law, with sole jurisdiction held by the Italian ordinary courts in the competent law court of Modena.

Atlantic Fluid Tech S.r.l. General Management

NOTES:

NOTES:

NOTES: