M20*B RELIEF VALVES BSPP

RELIEF VALVES 20 L/MIN

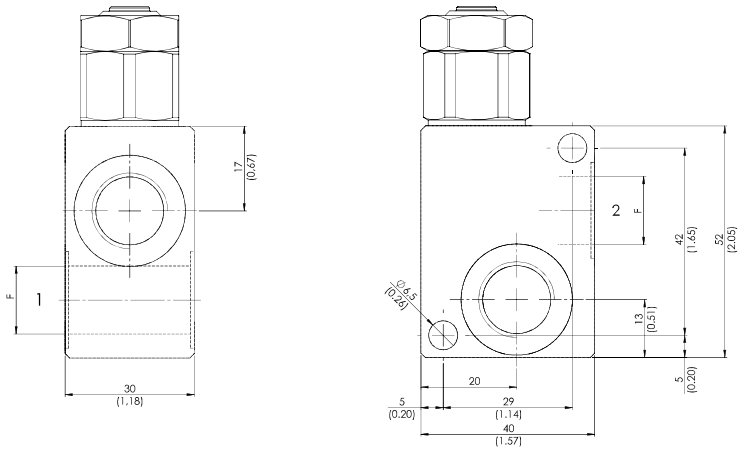

mm
[Inches]

HYDRAULIC CIRCUIT

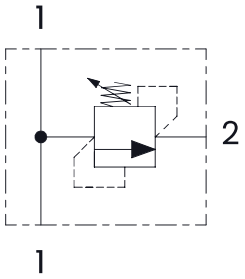

PERFORMANCES

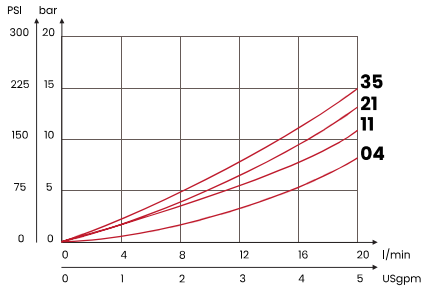

ORDERING CODE

ORDERING CODE	F	RANGE SPRING	INCREASE TO TURN	MAX FLOW l/min USgpm	MAX PRESSURE bar PSI	WEIGHT kg lbt
M201BC04	1/4 BSPP	10/40 bar [145/580 PSI]	20 bar/ al giro [290 PSI/turn]	20 [5,3]	350 [5075]	0,47 [1,03]
M201BC11		20/110 bar [290/1595 PSI]	40 bar/ al giro [580 PSI/turn]			
M201BC21		30/210 bar [435/3045 PSI	70 bar/ al giro [1015 PSI/turn]			
M201BC35		40/350 bar [580/5075 PSI]	130 bar/ al giro [1885 PSI/turn]			
M202BC04	3/8 BSPP	10/40 bar [145/580 PSI]	20 bar/ al giro [290 PSI/turn]			
M202BC11		20/110 bar [290/1595 PSI]	40 bar/ al giro [580 PSI/turn]			
M202BC21		30/210 bar [435/3045 PSI	70 bar/ al giro [1015 PSI/turn]			
M202BC35		40/350 bar [580/5075 PSI]	130 bar/ al giro [1885 PSI/turn]			
Steel body						

Mineral oil: DIN 51524 ISO 6743/4 | Oil viscosity: 15 to 250 cSt 15-250 mm2/s | Oil temperature: -4°F + 176°F -20°C +80°C | Ambient temperature: -4°F + 122°F -20°C +50°C |
Max contamination index with filter: 5 to 250 cSt 15-250 mm2/s | It is necessary a filter use to protect the valve (advised filtration 15 µm) |
Max leakage: 0,25 cm3/min - 5 drops/min at 80% of the calibration pressure

Fluid-app Srl reserves the right to modify its products without notice. Fluid-app Srl si riserva il diritto di modificare i propri prodotti senza preavviso.